Public Participation in a City Council Meeting:
The Public Comment portion of the meeting is the time to address the Mayor and City Council on topics not on the agenda. If a member of the public wishes to comment on an item on the agenda, they may do so while that item is being discussed by coming to the microphone and stating your name and address. Comments should be limited to 3 minutes or less and should be addressed to the Mayor and Council as a whole and not individually. Response from elected officials or staff is at the Mayor's discretion.

CITY OF MARSHALLTOWN COUNCIL AGENDA
CITY HALL COUNCIL CHAMBERS
10 WEST STATE STREET
APRIL 10, 2023, 5:30 PM

A. CALL TO ORDER

B. PLEDGE OF ALLEGIANCE

C. ROLL CALL

Hoop, Isom, Kell, Ladehoff, Schneider, Thompson, Walker

D. PUBLIC COMMENT

Members of the public may make comments on any item which was not on the agenda during this time. The speaker shall approach the microphone, and state his or her name and address. Comments shall be limited to three minutes unless a longer comment is authorized by the Mayor. The speaker shall direct comments to the Mayor and to the Council as a whole. The Mayor and Councilors shall not engage in discussion or debate on items raised by members of the public, and no action may be taken on items raised in public comments in order to comply with open meeting laws.

E. MAYOR, COUNCIL AND ADMINISTRATOR COMMENTS

1. RECOGNIZE GEOFF HUBBARD, PARKS AND RECREATION DIRECTOR, FOR THE SLATTERY/TRUEBLOOD PROFESSIONAL AWARD FROM THE IOWA PARKS & RECREATION ASSOCIATION

F. CONSENT AGENDA

1. APPROVE MINUTES 03/27/23 MEETING AND BILL LIST $1,756,147.37

   Documents:

   2023-03-27 SIGNED Council Minutes.pdf

2023-04-10_BILL LIST Summary.pdf
2023-04-10_BILL LIST Detail.pdf

2. APPROVE LIQUOR LICENSE RENEWALS

    - ADELINA'S GRILL, 101 N CENTER ST
    - DOLLAR GENERAL #2019, 408 S 9TH ST
    - ELMWOOD COUNTRY CLUB, 1734 COUNTRY CLUB LANE, WITH OUTDOOR SERVICE
    - HY-VEE FOOD & DRUGSTORE, 802 S CENTER ST
    - HY-VEE PARTY ROOM, 802 S CENTER ST
    - LA CARRETA MEXICAN GRILL, 308 IOWA AVENUE E, WITH OUTDOOR SERVICE
    - SMOKIN' G'S BBQ RESTAURANT AND CATERING, 25 W MAIN ST
    - ZAMORA FRESH MARKET, 4 EAST MAIN ST

3. APPROVE CIVIL SERVICE NEW HIRE LISTS FOR POLICE OFFICER & TRANSIT OPERATOR

    Documents:

    2023-04-10_CONSENT_Civil Service New Hire List - Police Officer.pdf
    2023-04-10_CONSENT_Civil Service New Hire List - Transit Op.pdf

4. RECEIPT OF BUILDING & TRADE PERMIT REPORT - MARCH 2023

    Documents:

    0323.pdf

5. RESOLUTION 2023-067 DELAYING ACCEPTING OF BID AND AWARD OF CONTRACT FOR THE MARSHALLTOWN FAÇADE REHABILITATION PROJECT #ECO21002 IN THE CITY OF MARSHALLTOWN, IOWA

    Documents:

    2023-04-10_2023-067_Resolution Delaying Award Marshalltown Facade Rehab Proj.pdf
    2023-04-10_2023-067_MEMO_Delay Award DTR Grant ECO21002.pdf
    2023-04-10_2023-067_MEMO_Order Construction DTR Grant ECO21002.pdf

2023-04-10_2023-067_Notice to bidders and notice of public hearing ECO21002.pdf
2023-04-10_2023-067_Marshalltown CDBG_RDG Project Budget Costs Estimate_022423a.pdf
2023-04-10_2023-067_Marshalltown Facades_Bid Set Spec_RDG 2023-0220b.pdf
2023-04-10_2023-067_Marshalltown Facades_Bid Set Dwg_RDG 2023-0220b.pdf

6. RESOLUTION 2023-068 APPROVE THE CODE BUILDING UPGRADE GRANT APPLICATION FOR 119 E. MAIN STREET, MARSHALLTOWN, IOWA

   Documents:

   2023-04-10_2023-068_Resolution to Approve Code Upgrade Grant at 119 E. Main Street.pdf
   2023-04-10_2023-068_Memo to approve Code Upgrade Grant at 119 E. Main St..pdf
   2023-04-10_2023-068_Code Upgrade application 119 E Main St.pdf
   2023-04-10_2023-068_FacadeGrantsListing Before April 10 2023 action taken.pdf

7. RESOLUTION 2023-069 TO APPROVE THE FAÇADE GRANT APPLICATION FOR 119 E. MAIN STREET, MARSHALLTOWN, IOWA

   Documents:

   2023-04-10_2023-069_Resolution to Approve Facade Application for 119 E Main Street.pdf
   2023-04-10_2023-069_Memo to approve Facade Grant at 119 E. Main St..pdf
   2023-04-10_2023-069_Facade application 119 E Main St.pdf

8. RESOLUTION 2023-070 APPROVE THE FAÇADE GRANT APPLICATION FOR 123 E. MAIN STREET, MARSHALLTOWN, IOWA

   Documents:

   2023-04-10_2023-070_Resolution to Approve Facade Application for 123 E Main Street.pdf
   2023-04-10_2023-070_Memo to approve Facade Grant at 123 E. Main St..pdf
   2023-04-10_2023-070_Facade application 123 E Main St.pdf

G. RESOLUTIONS

1. RESOLUTION 2023-071 TO AMEND THE STORM WATER UTILITY RATE CREDIT POLICY FOR THE CITY OF

MARSHALLTOWN

Documents:

2023-04-10_2023-071_Resolution to Amend Storm Water Utility Rate Credit Policy.pdf
2023-04-10_2023-071_Memo - Storm Water Credit Policy - 23 04 10.pdf
2023-04-10_2023-071_23 Policy Amendment - Storm Water Utility Rate Credit_Mark-Up.pdf
2023-04-10_2023-071_23 Policy Amendment - Storm Water Utility Rate Credit_Clean.pdf

2. RESOLUTION 2023-072 SUPPORTING AND AUTHORIZING THE APPLICATION FOR THE HUD LEAD-BASED PAINT HAZARD REDUCTION PROGRAM GRANT FROM THE U.S. DEPARTMENT OF HOUSING AND URBAN DEVELOPMENT

Documents:

2023-04-10_2023-072_RES Lead Grant application 2023.pdf
2023-04-10_2023-072_MEMO_Lead Grant 2023.pdf

3. PUBLIC HEARING AND RESOLUTION 2023-073 APPROVING THE FY2023-FY2027 CAPITAL IMPROVEMENT PLAN

Documents:

2023-04-10_2023-073_Resolution to Approve Capital Improvement Plan for FY23 to FY27.pdf
2023-04-10_2023-073_Memo CIP Final Draft FY2023-2027.pdf
2023-04-10_2023-073_FY23.27 CIP - Sources and Uses of Funds.pdf
2023-04-10_2023-073_FY23.27 CIP - Project Detail All Projects.pdf

4. PUBLIC HEARING AND RESOLUTION 2023-074 ADOPTING THE BUDGET AND CERTIFYING TAXES FOR THE FISCAL YEAR ENDING JUNE 30, 2024 AND RELATED TRANSFERS BETWEEN FUNDS

Documents:

2023-04-10_2023-074_RESOLUTION ADOPTING THE BUDGET AND CERTIFYING TAXES FOR FY24 AND TRANSFERS.pdf
2023-04-10_2023-074_Memo for Public Hearing for the FY24 Budget and Property Tax Certification.pdf
2023-04-10_2023-074_Budget Comparison Report all budgeted funds and functions.pdf
2023-04-10_2023-074_Cash Balances FY22 thru FY24.pdf

2023-04-10_2023-074_Revenues FY22 to FY24.pdf
2023-04-10_2023-074_Expenses FY22 to FY24.pdf
2023-04-10_2023-074_Marshalltown Water Works Budget.pdf

5. PUBLIC HEARING AND RESOLUTION 2023-075 PROVIDING FOR THE CONVEYANCE AND TRANSFER OF TITLE OF CITY OWNED LAND TO CYNTHIA LEWIS, 1021 SOUTH 5TH AVENUE

   Documents:

   2023-04-10_2023-075_Resolution Approving Conveyance of Land to Cynthia Lewis.pdf
   2023-04-10_2023-075_Memo Property Sale to Cynthia Lewis 1021 S. 5th Ave 03.27.23.pdf
   2023-04-10_2023-075_Memo Request to Purchase City Land 01.09.23.pdf
   2023-04-10_2023-075_Request to Purchase City Owned Land 12.08.22.pdf
   2023-04-10_2023-075_Plat of Survey.pdf
   2023-04-10_2023-075_Affidavit of Non-Severability.pdf

6. PUBLIC HEARING AND RESOLUTION 2023-076 PROVIDING FOR THE CONVEYANCE AND TRANSFER OF TITLE OF CITY OWNED LAND TO ELENO L. AND MARCIA A. HERNANDEZ

   Documents:

   2023-04-10_2023-076_Resolution Authorizing Sale 107 E Lincoln (SCL 3.17.23).pdf

7. PUBLIC HEARING AND RESOLUTION 2023-077 PROVIDING FOR THE CONVEYANCE AND TRANSFER OF TITLE FOR 503 BROMLEY STREET FROM THE CITY OF MARSHALLTOWN, IOWA TO RAYMOND JACKSON

   Documents:

   2023-04-10_2023-077_Resolution Approving Conveyance 503 Bromley St.pdf
   2023-04-10_2023-077_Request for Sealed Bids Vacant Lots.pdf
   2023-04-10_2023-077_Bid Tab Vacant Lots.pdf

8. PUBLIC HEARING AND RESOLUTION 2023-078 PROVIDING FOR THE CONVEYANCE AND TRANSFER OF TITLE FOR 503 WOODBURY STREET FROM THE CITY OF MARSHALLTOWN, IOWA TO RAYMOND JACKSON

   Documents:

   2023-04-10_2023-078_Resolution Approving Conveyance 503 Woodbury St.pdf

2023-04-10_2023-078_Request for Sealed Bids Vacant Lots.pdf
2023-04-10_2023-078_Bid Tab Vacant Lots.pdf

9. PUBLIC HEARING PROVIDING FOR THE CONVEYANCE AND TRANSFER OF TITLE FOR 906 SOUTH 11TH AVENUE FROM THE CITY OF MARSHALLTOWN, IOWA TO DJ NOREM

   PUBLIC HEARING ONLY - RESOLUTION FOR DEVELOPMENT AGREEMENT AT FUTURE MEETING.

   Documents:

   2023-04-10_2023-079_Memo Sale of 906 S 11th Ave 03.27.23.pdf
   2023-04-10_2023-079_Request for Sealed Bids 906 S 11th Ave.pdf

H. DISCUSSION

1. STRATEGIC PLAN UPDATE- FIRST QUARTER 2023

   Documents:

   Q1 Strategic Plan Update.pdf

2. DISCUSSION - TRICK-OR-TREAT DATE AND TIME

I. ADJOURNMENT

MISSION STATEMENT

The City of Marshalltown collaborates to provide a welcoming, safe, vibrant, and growing community.

Please visit the City's website for the complete agenda packet and to subscribe to agenda notices and department news at www.marshalltown-ia.gov.

MARSHALLTOWN
MORE THAN EVER

COUNCIL PROCEEDINGS
MARCH 27, 2023

In Mayor Greer's absence, Mayor Pro-Tem Ladehoff called the meeting to order at 5:30 pm, March 27, 2023, at the City Hall Council Chambers, 10 W State Street, and led the pledge of allegiance. Roll call–Present: Hoop, Isom, Kell, Ladehoff, Schneider, Thompson, Walker.

PUBLIC COMMENT

Mark Eaton, 1007 S 10th Ave commented he attended the joint City-County meeting last week and felt that Emergency Management should have had a seat at the table to discuss the lease agreement. Jim Shaw, 522 N 2nd St told the stories of pit bull attacks that occurred across the United States.

MAYOR, COUNCIL, ADMINISTRATOR COMMENTS

A proclamation was shared for the Marshalltown Library's 125th Anniversary on March 3/28.

CONSENT AGENDA

Motion by Schneider, second by Isom to adopt the consent agenda: APPROVE MINUTES 03/13/23 MEETING AND BILL LIST $938,553.63; APPROVE LIQUOR LICENSE RENEWALS FOR HALL OF FAME CONCESSIONS, 807 S 6TH ST, WITH OUTDOOR SERVICE, MARSHALLTOWN SPEEDWAY, 1308 E OLIVE ST, WITH OUTDOOR SERVICE, CASEY'S GENERAL STORE #1441, 1402 S 12TH AVE, WITH OWNERSHIP UPDATES, THE SPOT, 217 1/2 N 13TH ST, YESWAY #1148, 1701 IOWA AVE E, DOLLAR GENERAL #21858, 104 W STATE ST, FOOD & GAS MART, 613 N 3RD AVE; APPROVE FEBRUARY 2023 FINANCIAL STATEMENTS; APPROVE CIVIL SERVICE NEW HIRE LIST - TRANSIT OPERATOR; REAPPOINT NANCY HARRIS TO THE CIVIL SERVICE COMMISSION, 4 YR TERM 4/1/23-3/31/27; REAPPOINT MATTHEW BRODIN TO THE PLAN & ZONING COMMISSION, 5 YR TERM 4/1/23-4/1/28; REAPPOINT DAVID SCHULZE TO THE BOARD OF ADJUSTMENT, 5 YR TERM 4/1/23-3/31/28; RESOLUTION 2023-053 SETTING PUBLIC HEARING PRIOR TO APPROVING THE FIVE YEAR CAPITAL IMPROVEMENT PROGRAM (CIP) FOR FISCAL YEARS ENDING JUNE 30, 2023-2027; RESOLUTION 2023-054 SETTING PUBLIC HEARING PRIOR TO APPROVING THE BUDGET FOR FISCAL YEAR ENDING JUNE 30, 2024 AND CERTIFYING THE PROPERTY TAX LEVY; RESOLUTION 2023-055 SETTING A PUBLIC HEARING FOR THE CONVEYANCE AND TRANSFER OF TITLE OF CITY OWNED VACANT LOTS; RESOLUTION 2023-056 DECLARING CERTAIN PROPERTY SURPLUS PROPERTY AND AUTHORIZING DISPOSAL THEREOF FROM THE POLICE DEPARTMENT; RESOLUTION 2023-057 APPROVING A LEASE EXTENSION WITH THE MARSHALLTOWN COMMUNITY THEATER; RESOLUTION 2023-058 SETTING A PUBLIC HEARING FOR THE CONVEYANCE AND TRANSFER OF TITLE OF 906 SOUTH 11TH AVENUE TO DJ NOREM; RESOLUTION 2023-059 SETTING A PUBLIC HEARING FOR THE CONVEYANCE AND TRANSFER OF CITY OWNED LAND TO CYNTHIA LEWIS, 1021 S 5TH AVENUE; RESOLUTION 2023-060 SETTING A PUBLIC HEARING FOR THE CONVEYANCE AND TRANSFER OF TITLE OF CITY OWNED LAND TO ELENO L. AND MARCIA A. HERNANDEZ. Motion carried 7-0.

RESOLUTIONS

Motion by Isom, second by Kell to table RESOLUTION 2023-061 APPROVING A PROFESSIONAL SERVICES AGREEMENT FOR $218,938 WITH BOLTON AND MENK FOR DESIGN SERVICES FOR THE FIRST PHASE OF RIVERVIEW PARK to the May 8th meeting. Motion carried 7-0.

Motion by Schneider, second by Kell to approve RESOLUTION 2023-062 OF SUPPORT FOR THE CITY OF MARSHALLTOWN APPLICATION FOR COMMUNITY DEVELOPMENT BLOCK GRANT – DISASTER RECOVERY TREE CANOPY AND TREE REPLANTING PROGRAM. Jessica Kinser, City Administrator advised the application is for the planting of 140 trees on the terrace right-of-way in census tracts that have a low-to-moderate income which is proposed for the Northeast side of town. Park and Rec staff and volunteers would be responsible for the planting and watering for 2 years. Motion carried 7-0.

Mayor Pro-Tem Ladehoff opened a public hearing at 5:52 pm for PROVIDING FOR THE VACATION OF THE EAST-WEST ALLEY NORTH OF 328 SOUTH 3RD AVENUE. No written or oral comments were received. Jessica Kinser, City Administrator advised this alley would be combined with the parcel for 328 S 3rd Ave which will go out to bid for sale in the near future. The public hearing was closed at 5:53. Motion by Schneider, second by Kell to approve RESOLUTION 2023-063 PROVIDING FOR THE VACATION OF THE EAST-WEST ALLEY NORTH OF 328 SOUTH 3RD AVENUE. Motion carried 7-0.

Mayor Pro-Tem Ladehoff opened a public hearing at 5:53 pm for PROVIDING FOR THE CONVEYANCE AND TRANSFER OF TITLE TO A PORTION OF VACATED BUT UNCONVEYED ALLEY IN THE 900 BLOCK SOUTH 11TH AVENUE TO ABUTTING PROPERTY OWNERS. No written or oral comments were received. Jessica Kinser, City Administrator advised this will complete the conveyance of the vacated alley from 1961 for the properties that were not recorded at 903, 911, 913, and 917 South 11th Avenue. Affidavits of Non-Severability will be completed to tie the alley to these parcels. The public hearing was closed at 5:54 pm. Motion by Schneider, second by Isom to approve RESOLUTION 2023-064 PROVIDING FOR THE CONVEYANCE AND TRANSFER OF TITLE TO A PORTION OF VACATED BUT UNCONVEYED ALLEY IN THE 900 BLOCK SOUTH 11TH AVENUE TO ABUTTING PROPERTY OWNERS. Motion carried 7-0.

Mayor Pro-Tem Ladehoff opened a public hearing at 5:55 pm to APPROVE THE URBAN RENEWAL PLAN AMENDMENT FOR THE MARSHALLTOWN URBAN RENEWAL AREA NO. 4. Jessica Kinser, City Administrator advised the amendment is to add the Doug Niederman pharmacy project downtown for which he has requested $160,000 in TIF over 10 years. Public comment: Johnathan Hall, Marshalltown Area Chamber of Commerce, stated downtown appraisals are a challenge to overcome in order to be bankable. TIF is a big selling point to market and it speaks highly of the City to see these projects come through. Mark Eaton, 1007 S 10th Ave, stated the Senior Living Center on 2nd Avenue and Main Street has its own personal 10-year sliding scale tax abatement. If that is legal then that can be used on these developments to not impact the county and school district. You don't have to use TIF, grants, and loans because you have a tax abatement tool that comes out of your pocket. He also noted he feels the city needs to work on being equitable when approving TIF because you have to get 4 votes to approve an agreement but

a tax abatement anyone can complete. The public hearing was closed at 6:05. Motion by Schneider, second by Kell to approve RESOLUTION 2023-065 TO APPROVE URBAN RENEWAL PLAN AMENDMENT FOR THE MARSHALLTOWN URBAN RENEWAL AREA NO. 4. Motion carried 7-0.

Mayor Pro-Tem Ladehoff opened a public hearing at 6:07 pm for APPROVING DEVELOPMENT AGREEMENT WITH BETTY'S PROPERTIES, LLC, AUTHORIZING ANNUAL APPROPRIATION TAX INCREMENT PAYMENTS AND PLEDGING CERTAIN TAX INCREMENT REVENUES TO THE PAYMENT OF THE AGREEMENT. No written or oral comments were received. Jessica Kinser, City Administrator advised the agreement is for $16,000 a year in TIF over 10 years. The public hearing was closed at 6:08. Motion by Schneider, second by Kell to approve RESOLUTION 2023-066 APPROVING DEVELOPMENT AGREEMENT WITH BETTY'S PROPERTIES, LLC, AUTHORIZING ANNUAL APPROPRIATION TAX INCREMENT PAYMENTS AND PLEDGING CERTAIN TAX INCREMENT REVENUES TO THE PAYMENT OF THE AGREEMENT. Motion carried 7-0.

ORDINANCES

Motion by Schneider, second by Isom to adopt the third reading of ORDINANCE 15060 TO AMEND THE CODE OF ORDINANCE, CITY OF MARSHALLTOWN, IOWA BY AMENDING CHAPTER 76 TRAFFIC SCHEDULES, SCHEDULE VIII SPEED LIMITS. Heather Thomas, Public Works Director addressed a public comment she received that this is an unfair reduction to 30 mph. The curve at Brentwood Road is designed for a vehicle to not drive more than 35 mph, today's engineering standards mean it would be posted 5 mph less so 30 mph. Additionally, this is a minor arterial street that has the highest crash rating in town when you take out the state highway. Staff would have these changes operational by April 7th. With this change, the police department would allow a 30-day warning period. Public comment: Leigh Bauder, 401 Orchard Drive, is excited about the change and asks the work to be done during a non-congested time of day. Amended motion by Thompson to amend the speed limit to 35 mph from Highland Acres Road to South 12th Street. Motion failed due to lack of second. Original motion carried 7-0.

ADJOURNMENT

The meeting adjourned at 6:14 pm.

Respectfully Submitted,

Alicia Hunter

Alicia Hunter, City Clerk

CITY OF MARSHALLTOWN, IOWA

Joel Greer, Mayor

ATTEST:

Alicia Hunter, City Clerk

BILL LIST 04/10/23

Advertising	
Trending.Media/2	150.00
Consulting & Professional Fees	
Bernie.Lowe/2	79.08
Century.Link/1	262.00
Eide.Bailly.LLP/1	1,500.00
SpyGlassLLC/2	4,198.80
Verizon.Wirelss/1	50.00
Contracts	
ARL/1	6,666.67
Backflow.Preven/1	85.00
BDH/28	7,046.74
Calhoun-Burns/1	1,025.00
CenStates Scaff/1	800.00
Chamber.Commerc/2	71,500.48
CIRO.DIIORIOLLC/1	25,470.00
City.Laundering/3	109.88
Farber Vehicles/1	28,176.50
Fisher Gov Foun/1	8,333.33
K&W Electric/1	2,375.00
Karl.Chevrolet/1	40,924.90
Koch.Office/2	464.62
Marshall.Co.Aud/1	2,500.00
Mobius Group/1	12,800.00
Premier.Equip/1	59.00
Quad.City.Tstg/1	2,639.00
RICOH.USA.INC/4	50.37
SAFETY.KLEEN/1	436.29
Sandry.Fire.Sup/1	9,388.00
Schendel.Pest.C/2	114.45
Stone.Sanit/9	2,127.54
Veenstra & Kimm/1	8,534.51
Xerox.Corp/1	32.66
Medical	
Bernie.Lowe/2	877.18
HARTFORD.ACCTS/2	6,721.12
Hunter Lane LLC/2	227.32
McFarland.Cl/2	37.84
Payroll.Net	
Payroll/1	329,798.26
Rents/Leases	
201 E Main MT/14	4,355.00
A.White/1	505.00
Ackley.Housing/2	279.00
Alejo, Jerry/1	164.00
AMES,STEVEN/1	329.00
Barnes,L/1	274.00
BJ&J.LLC/1	265.00
BLOOD,A/1	421.00
Borota,K/2	693.00
Brodin,C/1	58.00
Brown,L/1	316.00
Buchanan,Steven/1	252.00
Buckaroo.LLC/2	959.00
Chedester,James/1	400.00
CIRSI/8	776.00
CMHC.INVEST/1	230.00
Colson, Mary/2	741.00
Crestview Apts/24	6,798.00
D.D.Rentals/5	2,382.00
Daters, Toni Ra/1	549.00
DC Brown Rental/1	277.00
Douglas Ter Apt/2	1,013.00
ECKLOR,S/1	425.00
Elwayne.Inc./4	923.00
Engel, Drew/1	479.00
EPC LLC/5	1,113.00
Etter, W/1	582.00
Eubanks,C/1	284.00
Frese.Propts/1	292.00
Friendly.Valley/1	69.00
Gonzales,G/1	181.00
Gorrell, Joseph/1	430.00
Gray,D/3	1,444.00
Gutierrez,Humbe/2	619.00
Hala,J/5	1,293.00
HARRIS,T/1	324.00
Hatch,R/3	808.00
Hilltop.Village/4	663.00
Hinmon,Linda/1	260.00
HOWARD,J/1	206.00
HUBBARD.MAPLE/2	407.00
Ibarra-LedezmaR/1	692.00
JBI.COOP.Assn/5	1,608.00
Judge,M/25	6,306.00
Kading Prop LLC/3	2,717.00
Klinefelter,R/1	450.00
Kramer,M/1	138.00
LAWSON,R/1	49.00
Lawthers.Prop.M/2	1,214.00
LBO Investments/2	1,052.00
Lopez, Jaime/1	395.00
LUENSE,B/6	2,477.00
Mansager, C/1	370.00
Manship,W/1	804.00
Marion.Manor2/1	741.00
Moore, Michelle/1	372.00
Mtown Lofts LLC/16	5,435.00
Mtwn/Westown/24	6,288.00
Nelson,L/1	266.00
North.Tama.Hsg/1	184.00
Oetker,D/2	373.00
Palisade.Holdng/1	76.00
Pebworth Homes/1	220.00
Pilot.Creek/1	165.00
PizanoCisnerosA/1	411.00
Plymat Jr, Will/1	646.00
Premier.RE.Mgmt/5	3,008.00
PremierIowaCity/7	2,591.00
Pyramind Prop/3	1,008.00

BILL LIST 04/10/23

RA.Rental.Prop/1	442.00
Ramirez, Sergio/1	388.00
RD.Toledo,LLP/1	352.00
Redborg,Kirsten/1	297.00
Reed,T/5	2,196.00
River.Birch/4	2,021.00
River.Oaks/8	4,067.00
RMB Cooperative/3	1,400.00
Roth, Kamaria/1	489.00
Schmidt,M/1	471.00
Squire,B/1	177.00
Steffensen, G/1	428.00
Sunrise.Apt/1	116.00
Swiff, Scott/1	413.00
Tallcorn.Tower/23	6,223.00
TOWN.APARTMENT/2	201.00
TTLC.Hsg/1	788.00
Walker, Angela/1	298.00
Weatherly.Erin/2	507.00
WEB III Invest/1	550.00
Worent.Inc/1	143.00
Worsfold Farm/1	384.00
Service/Repairs	
AAA.Septic/2	140.00
Aponte,M/1	27.00
Backflow.Preven/1	400.00
Blake, Tom/2	4,700.00
Camarena, Dania/1	1,100.00
Century.Link/30	769.50
CIT Sewer Sol/1	2,000.00
Cummins.Service/1	6,511.33
Fexsteve Ltd Co/2	15,750.00
FIRSTNET.ATT/2	902.74
Gale-Hazen,K/1	345.00
Goken, Briana/1	7.00
Gonzales,Alfred/1	550.00
Guerrero,Mariss/1	550.00
Hannam.Autom/2	6,040.31
Hawkeye.Truck/1	300.00
Heart.of.Iowa/10	2,474.79
Hidalgo,Yesenia/1	10.00
I.C.A.P./1	471,791.00
IA.Pump.Works/1	465.00
IA.Treasurer/3	17,672.11
IMFOA/1	50.00
Marsh.Co.Treas/5	1,778.00
Marshall.Co.Aud/14	376.00
McAtee.Tire/5	157.50
Mendoza,Yariana/1	30.00
Midw.Auto.Fire/1	531.50
Mtwn.Wtrwrks/3	8,612.93
OCAMPO,K/1	550.00
ONE.SOURCE/3	60.00
Perez, Eliva/1	31.00
Racom.Corp/1	1,531.25
Rainbow Carwash/1	14.65
RAMIREZ,J/1	31.00
Ramirez,Valeria/1	77.00
Rasmusson.Svc/2	2,813.59
Raven Creek/3	312.00
Sandry.Fire.Sup/1	705.68
Scharnweber.Wtr/1	27.00
Schmudlach,Cody/1	10.00
Schwenbach,Sara/1	68.00
Shattuck,Tracy/1	10.00
Simmons Jamaine/1	550.00
Titan.Machinery/2	1,213.20
Velez, Yaralexi/1	13.00
Vung, Cing/1	63.00
Walsh Door & Ha/2	894.62
Werner,Jessica/1	13.00
WICKHAM,M/1	560.00
Supplies/Parts	
ACOM.Solutions/1	275.13
Advance.Garage./1	1,220.00
Aimpoint Inc/1	871.00
Airgas.U.S.A./4	290.17
Amer Trade Mark/1	890.96
Arnold.Motor/10	561.86
Atlantic.Bottli/1	932.81
Bound.Tree.Medi/1	523.65
BSN.Sports/1	1,900.00
City.Laundering/14	426.32
Cntrl.IA.Distr/1	789.00
Cntrl.IA.Machin/1	44.06
CTI Ready Mix/3	895.00
Cummins.Service/1	9,529.78
DingesFire/1	89.95
Ed.M.Feld.Eq/1	585.00
FIRSTNET.ATT/1	790.26
Gale-Hazen,E/1	45.03
Galls.LLC/12	653.90
Gillig.LLC/1	488.24
Grimes.Asphalt/1	3,752.00
Hawkeye.Truck/1	2,187.00
IA.D.O.T/2	124.32
IA.Prison.Ind/1	118.40
Karl.Chevrolet/1	395.00
Landscape Forms/2	14,231.80
Macqueen.Equip/5	414.25
McAtee.Tire/2	115.68
Menards/7	391.91
Michael Todd&Co/1	203.96
Midland.Scienti/4	2,892.43
Municpal.Ergenc/1	386.43
MW Motor Supply/1	820.74
Napa.Auto/7	130.22
Northern.Tool.E/1	389.93
Nutrien.Ag.Sol/1	510.72
Plumb.Supply/1	262.15

BILL LIST 04/10/23

Racom.Corp/2	534.00
Rainbow Carwash/3	131.80
Raven Creek/3	1,613.76
SE.Jones.Indust/1	306.00
Shetler,D/1	163.40
Streichers.Inc/4	1,019.74
Sub.City/1	141.00
Thiesens.Supply/15	1,679.17
Titan.Machinery/2	500.40
Tri.State.Lock/1	16.00
Vajgrt.R/4	305.00
VanDiest Supply/3	772.42
Ziegler/1	603.68
Taxes Paid	
IA.Treasurer/1	0.93
Travel/Training	
FirstIntBank/1	10.00
Kinser,J/1	522.60
Weekley,S/1	20.00
Utilities	
Alliant.Energy/62	36,648.00
Consumr.Energy/3	407.93
I.R.U.A./1	164.32
WoodRiver.Enrgy/2	3,476.89
Wage Assignment	
American.Educa./1	64.41
Collection.Svs./10	2,069.22
DeMoss,B/1	300.00
FirstIntBank/1	5.36
I.P.E.R.S./13	122,602.40
I.R.S./6	89,772.37
IA.Treasurer/2	17,281.67
ICMA457Mission/12	15,693.65
M.F.P.R.S.I./6	183,353.47
United.Way/6	2,442.48
Total/769	**1,756,147.37**

BILL LIST 04/10/23

Account Number	Vendor Name	Description (Item)	Amount
184.5030.5242.000	201 E Main MT LLC	Housing Assistance Payment	$ 570.00
184.5030.5242.000	201 E Main MT LLC	Housing Assistance Payment	$ 443.00
184.5030.5242.000	201 E Main MT LLC	Housing Assistance Payment	$ 418.00
184.5030.5242.000	201 E Main MT LLC	Housing Assistance Payment	$ 405.00
184.5030.5242.000	201 E Main MT LLC	Housing Assistance Payment	$ 403.00
184.5030.5242.000	201 E Main MT LLC	Housing Assistance Payment	$ 385.00
184.5030.5242.000	201 E Main MT LLC	Housing Assistance Payment	$ 296.00
184.5030.5242.000	201 E Main MT LLC	Housing Assistance Payment	$ 255.00
184.5030.5242.000	201 E Main MT LLC	Housing Assistance Payment	$ 227.00
184.5030.5242.000	201 E Main MT LLC	Housing Assistance Payment	$ 208.00
184.5030.5242.000	201 E Main MT LLC	Housing Assistance Payment	$ 197.00
184.5030.5242.000	201 E Main MT LLC	Housing Assistance Payment	$ 137.00
184.5030.5242.000	201 E Main MT LLC	Housing Assistance Payment	$ 120.00
184.5030.5242.000	201 E Main MT LLC	Housing Assistance Payment	$ 291.00
690.8050.5380.000	AAA SEPTIC SERVICE INC	Extra services	$ 40.00
690.8050.5380.000	AAA SEPTIC SERVICE INC	April portable toilet rental	$ 100.00
184.5030.5242.000	ACKLEY HOUSING INC	Housing Assistance Payment	$ 46.00
184.5030.5242.000	ACKLEY HOUSING INC	Housing Assistance Payment	$ 233.00
001.6021.5605.000	ACOM SOLUTIONS INC	2,500 check stock	$ 275.13
690.8050.5611.000	Advance Garage Doors Inc	Transit - replaced damaged panel	$ 1,220.00
001.1010.5718.000	Aimpoint Inc	Duty RDS™ Red Dot Sight - One-piece Torsion Nut Mo	$ 871.00
110.2010.5600.000	AIRGAS USA, LLC	cut off wheels, welding chisel	$ 31.20
110.2010.5600.000	AIRGAS USA, LLC	grinding wheels, welding tips	$ 91.34
110.2010.5600.000	AIRGAS USA, LLC	Street- oxygen and acetylene	$ 157.46
110.2010.5718.000	AIRGAS USA, LLC	cut off wheels, welding chisel	$ 10.17
184.5030.5242.000	Alejo, Jerry	Housing Assistance Payment	$ 164.00
001.1030.5481.000	ALLIANT ENERGY	25 N Center St Civil Defense Sirens	$ 100.00
001.1030.5481.000	ALLIANT ENERGY	Tornado siren	$ 22.08
001.1099.5481.000	ALLIANT ENERGY	909 S 2nd St Fire & Police Bldg	$ 4,677.50
001.1099.5482.000	ALLIANT ENERGY	909 S 2nd St Fire & Police Bldg	$ 593.99
001.2020.5481.000	ALLIANT ENERGY	NE corner S 1st Ave / Church St parking lot	$ 96.77
001.2080.5481.000	ALLIANT ENERGY	2651 170th St Runway lights	$ 126.05
001.2080.5481.000	ALLIANT ENERGY	2651 170th St TEMP	$ 397.32
001.4010.5481.000	ALLIANT ENERGY	Library - 105 W Boone St	$ 2,691.76
001.4030.5481.000	ALLIANT ENERGY	802 S 3rd St Skate Park	$ 18.58
001.4030.5481.000	ALLIANT ENERGY	108 N 2nd Ave Alley - Farmers Market	$ 19.60
001.4030.5481.000	ALLIANT ENERGY	311 E ANSON ST PARK	$ 20.38
001.4030.5481.000	ALLIANT ENERGY	915 S 4th Ave Anson Park	$ 26.36
001.4030.5481.000	ALLIANT ENERGY	BROADMORE Assistance League	$ 14.68
001.4030.5481.000	ALLIANT ENERGY	HIGHLAND ACRES RD	$ 25.16
001.4045.5481.000	ALLIANT ENERGY	Aquatic Center	$ 159.20
001.4065.5481.000	ALLIANT ENERGY	10 W State St COLISEUM	$ 3,046.52
001.4065.5482.000	ALLIANT ENERGY	10 W State St COLISEUM	$ 1,347.60
001.6050.5481.000	ALLIANT ENERGY	24 N Center St Municipal Bldg	$ 39.00
001.6051.5481.000	ALLIANT ENERGY	36 N Center St- Carnegie Bldg	$ 1,228.35
001.6051.5482.000	ALLIANT ENERGY	36 N Center St- Carnegie Bldg	$ 950.07
110.2030.5481.000	ALLIANT ENERGY	407 Player St Bridge Light	$ 82.22
110.2030.5481.000	ALLIANT ENERGY	17 N Center St metered	$ 27.49
110.2030.5481.000	ALLIANT ENERGY	220 E MAIN ST ALLEY	$ 49.93
110.2030.5481.000	ALLIANT ENERGY	404 1/2 S Center St Viaduct	$ 85.56
110.2030.5481.000	ALLIANT ENERGY	36 E Main St Alley	$ 45.73
110.2030.5481.000	ALLIANT ENERGY	120 E MAIN ST ALLEY	$ 49.33
110.2030.5481.000	ALLIANT ENERGY	MARKET ST BRIDGE LIGHTS	$ 75.39
110.2030.5481.000	ALLIANT ENERGY	3098 LINCOLN WAY SIGN	$ 22.40
110.2030.5481.000	ALLIANT ENERGY	6 S 2nd St Alley	$ 42.44
110.2030.5481.000	ALLIANT ENERGY	36 W MAIN ST ALLEY	$ 45.44
110.2030.5481.000	ALLIANT ENERGY	106 S CENTER ST METERED	$ 39.88
110.2030.5481.000	ALLIANT ENERGY	N CENTER ST & CHURCH ST	$ 36.15
110.2030.5481.000	ALLIANT ENERGY	S 6TH ST	$ 54.11
110.2030.5481.000	ALLIANT ENERGY	1707 Laurel Dr Viaduct Light	$ 33.64
110.2030.5481.000	ALLIANT ENERGY	MARSHALLTOWN	$ 18,721.75

110.2040.5481.000	ALLIANT ENERGY	E ANSON ST CNR 3RD AVE	$	52.83
110.2040.5481.000	ALLIANT ENERGY	219 Westwood flashing lights	$	21.09
110.2040.5481.000	ALLIANT ENERGY	E Anson St cnr 4th Ave	$	21.09
110.2040.5481.000	ALLIANT ENERGY	5 N 5th St cnr State St	$	21.09
110.2040.5481.000	ALLIANT ENERGY	S CENTER ST CNR BOONE	$	46.48
110.2040.5481.000	ALLIANT ENERGY	S CENTER ST CNR LINN	$	35.87
110.2040.5481.000	ALLIANT ENERGY	S 3RD AVE CNR LINN	$	100.80
110.2040.5481.000	ALLIANT ENERGY	S CENTER ST CNR ANSON	$	63.36
110.2040.5481.000	ALLIANT ENERGY	W High St & S 6th St	$	27.08
110.2040.5481.000	ALLIANT ENERGY	S 1ST AVE & E ANSON	$	62.91
110.2040.5481.000	ALLIANT ENERGY	S 6TH ST CNR OLIVE	$	34.68
142.4030.5481.000	ALLIANT ENERGY	800 S 6TH ST	$	153.09
610.8016.5481.000	ALLIANT ENERGY	S 2nd St cnr Player	$	386.45
001.4030.5481.000	ALLIANT ENERGY	500 Plaza Hts Rd	$	30.51
001.4030.5481.000	ALLIANT ENERGY	KIWANIS PARK	$	20.38
001.4030.5481.000	ALLIANT ENERGY	Arnolds Park	$	13.43
001.4030.5481.000	ALLIANT ENERGY	220 N 13th St Rest room	$	44.86
001.4030.5481.000	ALLIANT ENERGY	N 13th St	$	87.49
001.4030.5481.000	ALLIANT ENERGY	407 Marion St	$	26.93
110.2010.5481.000	ALLIANT ENERGY	1600 S Center St irrigation system	$	21.12
110.2030.5481.000	ALLIANT ENERGY	25 N 13th St	$	64.30
110.2030.5481.000	ALLIANT ENERGY	207 W Main St	$	47.78
110.2040.5481.000	ALLIANT ENERGY	S CENTER ST & SOUTH ST	$	40.67
110.2040.5481.000	ALLIANT ENERGY	S CENTER ST CNR OLIVE	$	47.97
110.2040.5481.000	ALLIANT ENERGY	W Meadowlane cnr Center	$	41.10
110.2040.5481.000	ALLIANT ENERGY	Westwood Dr cnr Center	$	32.15
610.8016.5481.000	ALLIANT ENERGY	N 22nd St	$	90.06
999.1121.000	American Education Services	PR WITHHOLDING	$	64.41
001.1050.5600.000	American Trade Mark Co	Fire dept name strips	$	890.96
184.5030.5242.000	AMES, STEVEN	Housing Assistance Payment	$	329.00
001.1090.5331.000	ANIMAL RESCUE LEAGUE	Annual contract taking care of animals city limits	$	6,666.67
184.5030.5246.000	Aponte, Miguel	Housing Assistance Payment	$	27.00
001.1050.5565.000	Arnold Motor Supply	ladder truck engine oil filter	$	21.68
110.2010.5565.000	Arnold Motor Supply	Durapatcher 59- filters	$	55.43
110.2010.5600.000	Arnold Motor Supply	hydraulic fitting	$	5.77
110.2010.5600.000	Arnold Motor Supply	anit seize lube	$	20.56
110.2010.5600.000	Arnold Motor Supply	anit seize lube	$	20.56
110.2010.5600.000	Arnold Motor Supply	degreaser	$	35.76
110.2010.5600.000	Arnold Motor Supply	hydraulic fittings, wiper blades	$	65.55
110.2010.5600.000	Arnold Motor Supply	o-ring asst	$	8.81
110.2010.5718.000	Arnold Motor Supply	double faced sledge hammer	$	171.49
690.8050.5565.000	Arnold Motor Supply	separator and engine coolant filters	$	156.25
001.4066.5613.000	ATLANTIC BOTTLING CO	Coliseum resale products	$	932.81
001.4010.5344.000	Backflow Prevention Services of Iowa	Library annual inspection	$	85.00
001.6050.5410.000	Backflow Prevention Services of Iowa	Boiler backflow preventer YSS/ City Hall	$	400.00
184.5030.5242.000	Barnes, Lonnie	Housing Assistance Payment	$	274.00
001.1010.5347.000	BDH INFORMATION TECHNOLOGY LLC	PD Convert internet service	$	79.34
001.1010.5347.000	BDH INFORMATION TECHNOLOGY LLC	Block Time	$	1,266.25
001.1010.5347.000	BDH INFORMATION TECHNOLOGY LLC	Veeam backup & recovery- PD	$	38.80
001.4010.5347.000	BDH INFORMATION TECHNOLOGY LLC	Block Time	$	633.12
001.4010.5347.000	BDH INFORMATION TECHNOLOGY LLC	Library/ Patron PC's remote monitoring/ management	$	190.00
001.6070.5347.000	BDH INFORMATION TECHNOLOGY LLC	Library remote monitroing/ management	$	105.00
001.6070.5347.000	BDH INFORMATION TECHNOLOGY LLC	Veeam monthly subsciption	$	116.40
001.6070.5347.000	BDH INFORMATION TECHNOLOGY LLC	Parks remote montitoring/ management	$	30.00
001.6070.5347.000	BDH INFORMATION TECHNOLOGY LLC	RMM desktop service/ patch management	$	114.00
001.6070.5347.000	BDH INFORMATION TECHNOLOGY LLC	Administration remote monitoring/ management	$	20.00
001.6070.5347.000	BDH INFORMATION TECHNOLOGY LLC	Block Time	$	3,165.63
001.6070.5347.000	BDH INFORMATION TECHNOLOGY LLC	Police remote monitoring/ management	$	325.00
001.6070.5347.000	BDH INFORMATION TECHNOLOGY LLC	Coliseum remote monitoring/ management	$	25.00
001.6070.5347.000	BDH INFORMATION TECHNOLOGY LLC	City Hall remote monitoring/ management	$	95.00
001.6070.5347.000	BDH INFORMATION TECHNOLOGY LLC	Standalone Advanced SPAM/ Virus emailing	$	175.00
001.6070.5347.000	BDH INFORMATION TECHNOLOGY LLC	SentinelOne Singularity Complete Advanced EDR	$	152.00
001.6070.5347.000	BDH INFORMATION TECHNOLOGY LLC	Housing remote monitoring/ management	$	60.00
001.6070.5347.000	BDH INFORMATION TECHNOLOGY LLC	City Council remote monitoring/ management	$	5.00

001.6070.5347.000	BDH INFORMATION TECHNOLOGY LLC	Fire dept remote monitoring/ management	$	150.00
001.6070.5347.000	BDH INFORMATION TECHNOLOGY LLC	Finance remote monitoring/ management	$	25.00
110.2010.5347.000	BDH INFORMATION TECHNOLOGY LLC	PW remote monitoring/ management	$	60.00
110.2010.5347.000	BDH INFORMATION TECHNOLOGY LLC	Veeam Backup & Recovery PW	$	19.40
110.2060.5347.000	BDH INFORMATION TECHNOLOGY LLC	Veeam Backup & Recovery PW	$	19.40
110.2060.5347.000	BDH INFORMATION TECHNOLOGY LLC	Engineering remote monitoring/ management	$	75.00
610.8015.5347.000	BDH INFORMATION TECHNOLOGY LLC	WPCP Veeam Backup & recovery	$	19.40
610.8015.5347.000	BDH INFORMATION TECHNOLOGY LLC	WPCP SentinelOne	$	8.00
610.8015.5347.000	BDH INFORMATION TECHNOLOGY LLC	WPCP remote monitoring/ management	$	60.00
690.8050.5347.000	BDH INFORMATION TECHNOLOGY LLC	Transit remote monitoring/ management	$	15.00
881.1010.5230.000	BERNIE LOWE & ASSOC Inc	paid medical claims	$	3.89
881.1010.5339.000	BERNIE LOWE & ASSOC Inc	paid medical claims	$	84.45
881.1050.5230.000	BERNIE LOWE & ASSOC Inc	paid medical claims	$	75.19
881.1050.5339.000	BERNIE LOWE & ASSOC Inc	paid medical claims	$	792.73
184.5030.5242.000	BJ&J LLC	Housing Assistance Payment	$	265.00
189.3040.5410.000	BLAKE, TOM	711 N 4TH ST- LEAD	$	3,900.00
189.3040.5415.000	BLAKE, TOM	711 N 4TH ST- HEALTHY HOMES	$	800.00
184.5030.5242.000	BLOOD, ALEX	Housing Assistance Payment	$	421.00
184.5030.5242.000	Borota, Kent	Housing Assistance Payment	$	421.00
184.5030.5242.000	Borota, Kent	Housing Assistance Payment	$	272.00
156.1050.5630.000	Bound Tree Medical LLC	airway kit, oxymeter	$	523.65
750.0120.000	Brian DeMoss	start up petty cash for compost season	$	300.00
184.5030.5242.000	BRODIN, CHRIS	Housing Assistance Payment	$	58.00
184.5030.5242.000	BROWN, LARRY & KAREN	Housing Assistance Payment	$	316.00
001.4041.5601.000	BSN SPORTS	Folding judges stand	$	1,900.00
184.5030.5242.000	Buchanan, Steven	Housing Assistance Payment	$	252.00
184.5030.5242.000	Buckaroo LLC	Housing Assistance Payment	$	491.00
184.5030.5242.000	Buckaroo LLC	Housing Assistance Payment	$	468.00
110.2010.5342.000	CALHOUN-BURNS AND ASSOCIATES, INC	2023 Bridge Inspections- UPRR Right entry reimburs	$	1,025.00
189.3040.5433.000	Camarena, Dania	lead hazard reduction program	$	1,100.00
610.8015.5600.000	CENTRAL IOWA DISTRIBUTING INC	WPCP operatig & cleaning supplies	$	789.00
110.2010.5600.000	CENTRAL IOWA MACHINE SHOP INC	long pipe	$	44.06
184.5030.5242.000	CENTRAL IOWA RESIDENTIAL SERV INC	Housing Assistance Payment	$	112.00
184.5030.5242.000	CENTRAL IOWA RESIDENTIAL SERV INC	Housing Assistance Payment	$	110.00
184.5030.5242.000	CENTRAL IOWA RESIDENTIAL SERV INC	Housing Assistance Payment	$	108.00
184.5030.5242.000	CENTRAL IOWA RESIDENTIAL SERV INC	Housing Assistance Payment	$	102.00
184.5030.5242.000	CENTRAL IOWA RESIDENTIAL SERV INC	Housing Assistance Payment	$	101.00
184.5030.5242.000	CENTRAL IOWA RESIDENTIAL SERV INC	Housing Assistance Payment	$	70.00
184.5030.5242.000	CENTRAL IOWA RESIDENTIAL SERV INC	Housing Assistance Payment	$	115.00
184.5030.5242.000	CENTRAL IOWA RESIDENTIAL SERV INC	Housing Assistance Payment	$	58.00
355.1075.5331.000	Central States Scaffolding LLC	2/27-3/27 rental	$	800.00
001.1010.5450.000	CENTURYLINK	ALL PHONE LINES	$	107.26
001.1050.5450.000	CENTURYLINK	ALL PHONE LINES	$	39.00
001.1070.5450.000	CENTURYLINK	ALL PHONE LINES	$	9.75
001.1071.5450.000	CENTURYLINK	ALL PHONE LINES	$	9.75
001.1075.5450.000	CENTURYLINK	ALL PHONE LINES	$	9.75
001.4010.5450.000	CENTURYLINK	Library Analog Backup Lines	$	80.24
001.4010.5450.000	CENTURYLINK	ALL PHONE LINES	$	19.50
001.4030.5450.000	CENTURYLINK	ALL PHONE LINES	$	9.75
001.4040.5450.000	CENTURYLINK	ALL PHONE LINES	$	9.75
001.4045.5450.000	CENTURYLINK	ALL PHONE LINES	$	19.50
001.4065.5450.000	CENTURYLINK	Coliseum Backup Analog Lines	$	80.24
001.4065.5450.000	CENTURYLINK	ALL PHONE LINES	$	9.75
001.6010.5450.000	CENTURYLINK	ALL PHONE LINES	$	9.75
001.6012.5450.000	CENTURYLINK	ALL PHONE LINES	$	9.75
001.6020.5450.000	CENTURYLINK	ALL PHONE LINES	$	9.75
001.6021.5450.000	CENTURYLINK	ALL PHONE LINES	$	39.03
001.6025.5450.000	CENTURYLINK	ALL PHONE LINES	$	9.75
001.6070.5230.000	CENTURYLINK	ALL PHONE LINES	$	262.00
110.2010.5450.000	CENTURYLINK	PW backup analog 641-752-4388	$	48.14
110.2010.5450.000	CENTURYLINK	ALL PHONE LINES	$	9.75
110.2040.5450.000	CENTURYLINK	ALL PHONE LINES	$	9.75
110.2060.5450.000	CENTURYLINK	ALL PHONE LINES	$	9.75
184.5030.5450.000	CENTURYLINK	ALL PHONE LINES	$	19.50

189.3040.5450.000	CENTURYLINK	ALL PHONE LINES	$	9.75
610.8015.5450.000	CENTURYLINK	WPCP Backup Analog 752-9779	$	80.24
610.8015.5450.000	CENTURYLINK	ALL PHONE LINES	$	29.25
610.8016.5450.000	CENTURYLINK	ALL PHONE LINES	$	11.70
690.8050.5450.000	CENTURYLINK	PW backup analog 641-752-4388	$	32.10
690.8050.5450.000	CENTURYLINK	ALL PHONE LINES	$	9.75
740.8065.5450.000	CENTURYLINK	ALL PHONE LINES	$	7.80
750.8070.5450.000	CENTURYLINK	ALL PHONE LINES	$	9.75
184.5030.5242.000	Chedester, James	Housing Assistance Payment	$	400.00
355.1075.5342.000	Ciro DiIorio Masonry & Landscaping LLC	McGregor Furniture structrual wall repair	$	25,470.00
610.8016.5410.000	CIT Sewer Solutions	Lateral reinstatement for 230 S 3rd Ave	$	2,000.00
110.2010.5132.000	CITY LAUNDERING COMPANY	Street dept uniform cleaning	$	8.32
110.2010.5132.000	CITY LAUNDERING COMPANY	Street dept uniform cleaning	$	8.32
110.2010.5132.000	CITY LAUNDERING COMPANY	Street dept uniformrug cleaning	$	91.53
110.2010.5342.000	CITY LAUNDERING COMPANY	Street Dept. -comfort flow	$	91.53
110.2010.5342.000	CITY LAUNDERING COMPANY	Street Dept. -comfort flow	$	10.72
110.2010.5342.000	CITY LAUNDERING COMPANY	Street Dept. -comfort flow	$	7.63
110.2010.5600.000	CITY LAUNDERING COMPANY	Street Dept. - supplies	$	27.38
110.2010.5600.000	CITY LAUNDERING COMPANY	Street Dept. - supplies	$	27.38
110.2010.5600.000	CITY LAUNDERING COMPANY	Street Dept. - supplies	$	28.07
110.2040.5132.000	CITY LAUNDERING COMPANY	uniform cleaning Utility Dept.	$	22.64
110.2040.5132.000	CITY LAUNDERING COMPANY	uniform cleaning Utility Dept.	$	22.64
110.2040.5132.000	CITY LAUNDERING COMPANY	uniform cleaning Utility Dept.	$	22.64
110.2040.5132.000	CITY LAUNDERING COMPANY	uniform cleaning Utility Dept.	$	22.64
690.8050.5132.000	CITY LAUNDERING COMPANY	uniform cleaning-Transit dept	$	36.19
690.8050.5132.000	CITY LAUNDERING COMPANY	uniform cleaning-Transit dept	$	36.19
690.8050.5132.000	CITY LAUNDERING COMPANY	uniform cleaning-Transit dept	$	36.19
690.8050.5132.000	CITY LAUNDERING COMPANY	uniform cleaning-Transit dept	$	36.19
184.5030.5242.000	CMHC Investments LLC	Housing Assistance Payment	$	230.00
999.1121.000	COLLECTION SERVICES CENTER	CHILD SUPPORT	$	139.77
999.1121.000	COLLECTION SERVICES CENTER	CHILD SUPPORT	$	423.86
999.1121.000	COLLECTION SERVICES CENTER	CHILD SUPPORT	$	146.76
999.1121.000	COLLECTION SERVICES CENTER	CHILD SUPPORT	$	191.92
999.1121.000	COLLECTION SERVICES CENTER	CHILD SUPPORT	$	115.38
999.1121.000	COLLECTION SERVICES CENTER	CHILD SUPPORT	$	363.23
999.1121.000	COLLECTION SERVICES CENTER	CHILD SUPPORT	$	23.07
999.1121.000	COLLECTION SERVICES CENTER	CHILD SUPPORT	$	101.59
999.1121.000	COLLECTION SERVICES CENTER	CHILD SUPPORT	$	102.11
999.1121.000	COLLECTION SERVICES CENTER	CHILD SUPPORT	$	461.53
184.5030.5242.000	Colson, Mary	Housing Assistance Payment	$	503.00
184.5030.5242.000	Colson, Mary	Housing Assistance Payment	$	238.00
110.2030.5481.000	CONSUMERS ENERGY CO-OP	City of Marshalltown	$	254.32
110.2040.5481.000	CONSUMERS ENERGY CO-OP	City of Marshalltown	$	82.90
110.2040.5481.000	CONSUMERS ENERGY CO-OP	City of Marshalltown	$	70.71
184.5030.5242.000	Crestview Apts LLC	Housing Assistance Payment	$	175.00
184.5030.5242.000	Crestview Apts LLC	Housing Assistance Payment	$	171.00
184.5030.5242.000	Crestview Apts LLC	Housing Assistance Payment	$	160.00
184.5030.5242.000	Crestview Apts LLC	Housing Assistance Payment	$	78.00
184.5030.5242.000	Crestview Apts LLC	Housing Assistance Payment	$	208.00
184.5030.5242.000	Crestview Apts LLC	Housing Assistance Payment	$	221.00
184.5030.5242.000	Crestview Apts LLC	Housing Assistance Payment	$	261.00
184.5030.5242.000	Crestview Apts LLC	Housing Assistance Payment	$	342.00
184.5030.5242.000	Crestview Apts LLC	Housing Assistance Payment	$	333.00
184.5030.5242.000	Crestview Apts LLC	Housing Assistance Payment	$	327.00
184.5030.5242.000	Crestview Apts LLC	Housing Assistance Payment	$	327.00
184.5030.5242.000	Crestview Apts LLC	Housing Assistance Payment	$	327.00
184.5030.5242.000	Crestview Apts LLC	Housing Assistance Payment	$	223.00
184.5030.5242.000	Crestview Apts LLC	Housing Assistance Payment	$	315.00
184.5030.5242.000	Crestview Apts LLC	Housing Assistance Payment	$	307.00
184.5030.5242.000	Crestview Apts LLC	Housing Assistance Payment	$	303.00
184.5030.5242.000	Crestview Apts LLC	Housing Assistance Payment	$	301.00
184.5030.5242.000	Crestview Apts LLC	Housing Assistance Payment	$	301.00
184.5030.5242.000	Crestview Apts LLC	Housing Assistance Payment	$	296.00
184.5030.5242.000	Crestview Apts LLC	Housing Assistance Payment	$	263.00

184.5030.5242.000	Crestview Apts LLC	Housing Assistance Payment	$	312.00
184.5030.5242.000	Crestview Apts LLC	Housing Assistance Payment	$	405.00
184.5030.5242.000	Crestview Apts LLC	Housing Assistance Payment	$	515.00
184.5030.5242.000	Crestview Apts LLC	Housing Assistance Payment	$	327.00
610.8016.5600.000	CTI Ready Mix Inc	1st Ave & Byron St sanitary sewer lateral repair	$	349.00
740.8065.5600.000	CTI Ready Mix Inc	2nd & Lincoln St storm sewer repair	$	273.00
740.8065.5600.000	CTI Ready Mix Inc	S 12th St storm sewer repair	$	273.00
690.8050.5410.000	CUMMINS Sales & Service	Trnsit - Gillig - Air tube, temp sensor, trans flu	$	6,511.33
690.8050.5565.000	CUMMINS Sales & Service	Transit 011 injectors	$	9,529.78
184.5030.5242.000	D & D RENTALS INC	Housing Assistance Payment	$	146.00
184.5030.5242.000	D & D RENTALS INC	Housing Assistance Payment	$	1,050.00
184.5030.5242.000	D & D RENTALS INC	Housing Assistance Payment	$	422.00
184.5030.5242.000	D & D RENTALS INC	Housing Assistance Payment	$	415.00
184.5030.5242.000	D & D RENTALS INC	Housing Assistance Payment	$	349.00
184.5030.5242.000	DATERS, TONI RAE	Housing Assistance Payment	$	549.00
184.5030.5242.000	DC Brown Rentals	Housing Assistance Payment	$	277.00
001.1050.5132.000	Dinges Fire Company	Vanguard fire gloves	$	89.95
184.5030.5242.000	Douglas Terrace Apartments LLC	Housing Assistance Payment	$	625.00
184.5030.5242.000	Douglas Terrace Apartments LLC	Housing Assistance Payment	$	388.00
184.5030.5242.000	Ecklor, Shane	Housing Assistance Payment	$	425.00
156.1050.5718.000	ED M FELD EQUIPMENT CO INC	lightweight corrosive resistant valve	$	585.00
184.5030.5232.000	EIDEBAILLY LLP	Audit work for REAC submission	$	1,500.00
184.5030.5242.000	ELWAYNE INC	Housing Assistance Payment	$	169.00
184.5030.5242.000	ELWAYNE INC	Housing Assistance Payment	$	281.00
184.5030.5242.000	ELWAYNE INC	Housing Assistance Payment	$	185.00
184.5030.5242.000	ELWAYNE INC	Housing Assistance Payment	$	288.00
184.5030.5242.000	Engel, Drew	Housing Assistance Payment	$	479.00
184.5030.5242.000	EPC LLC	Housing Assistance Payment	$	58.00
184.5030.5242.000	EPC LLC	Housing Assistance Payment	$	255.00
184.5030.5242.000	EPC LLC	Housing Assistance Payment	$	260.00
184.5030.5242.000	EPC LLC	Housing Assistance Payment	$	259.00
184.5030.5242.000	EPC LLC	Housing Assistance Payment	$	281.00
184.5030.5242.000	ETTER, WILLIAM	Housing Assistance Payment	$	582.00
184.5030.5242.000	EUBANKS, CHAD	Housing Assistance Payment	$	284.00
170.4010.5750.000	Farber Speciality Vehicles	10% acceptance of bookmobile, final payment	$	28,176.50
189.3040.5410.000	FEXSTEVE LIMITED CO	1008 W LINCOLN WAY - LEAD	$	14,350.00
189.3040.5415.000	FEXSTEVE LIMITED CO	1008 W LINCOLN WAY - HH	$	1,400.00
001.1010.5464.000	First Interstate Bank	Meal during Training @ Camp Dodge	$	10.00
999.1164.000	First Interstate Bank	Meal during Training @ Camp Dodge	$	5.36
001.1010.5450.000	FIRSTNET-AT&T Mobility	PD cell phones/ hotspots/ cameras/ car phones	$	239.66
001.1010.5451.000	FIRSTNET-AT&T Mobility	PD cell phones/ hotspots/ cameras/ car phones	$	790.26
001.1050.5450.000	FIRSTNET-AT&T Mobility	Fire dept wireless services	$	663.08
001.4060.5331.000	Fisher Governor Foundation	Property taxes levied for Civic Center	$	8,333.33
184.5030.5242.000	FRESE PROPERTIES LLC	Housing Assistance Payment	$	292.00
184.5030.5242.000	FRIENDLY VALLEY APARTMENTS INC	Housing Assistance Payment	$	69.00
001.4041.5601.000	GALE-HAZEN, Emily	clay saucers and planters	$	45.03
001.4040.5358.000	GALE-HAZEN, Karen A	classes	$	345.00
001.1010.5132.000	GALLS LLC	BATES WP ULTRA LITE ZIP BOOT	$	(152.96)
001.1010.5132.000	GALLS LLC	3in DuraShocks Lace-to-toe Side Zip	$	(131.71)
001.1010.5132.000	GALLS LLC	PD employee clothing	$	61.60
001.1010.5132.000	GALLS LLC	duty holster	$	229.83
001.1010.5132.000	GALLS LLC	name plates	$	41.04
001.1010.5132.000	GALLS LLC	servicing since black letters	$	15.95
001.1010.5132.000	GALLS LLC	PD employee clothing	$	49.13
001.1010.5132.000	GALLS LLC	duty belt	$	41.58
001.1010.5132.000	GALLS LLC	PD employee clothing	$	50.40
001.1010.5132.000	GALLS LLC	PD employee clothing	$	147.60
001.1010.5132.000	GALLS LLC	PD employee clothing	$	126.05
001.1050.5132.000	GALLS LLC	Fire dept employee boots	$	175.39
690.8050.5565.000	GILLIG LLC	bus filter element and silicone hose	$	488.24
184.5030.5246.000	Goken, Briana	Housing Assistance Payment	$	7.00
189.3040.5433.000	Gonzales, Alfredo	lead hazard reduction program	$	550.00
184.5030.5242.000	Gonzales, Gilbert	Housing Assistance Payment	$	181.00
184.5030.5242.000	Gorrell, Joseph	Housing Assistance Payment	$	430.00

184.5030.5242.000 GRAY, DENNIS	Housing Assistance Payment	$	787.00
184.5030.5242.000 GRAY, DENNIS	Housing Assistance Payment	$	421.00
184.5030.5242.000 GRAY, DENNIS	Housing Assistance Payment	$	236.00
110.2010.5618.000 GRIMES ASPHALT AND PAVING CORP.	Street dept cold mix	$	3,752.00
189.3040.5433.000 Guerrero, Marissa Yvette	Lead hazard reduction program	$	550.00
184.5030.5242.000 Gutierrez, Humberto Fabian	Housing Assistance Payment	$	386.00
184.5030.5242.000 Gutierrez, Humberto Fabian	Housing Assistance Payment	$	233.00
184.5030.5242.000 HALA, JANET	Housing Assistance Payment	$	722.00
184.5030.5242.000 HALA, JANET	Housing Assistance Payment	$	275.00
184.5030.5242.000 HALA, JANET	Housing Assistance Payment	$	172.00
184.5030.5242.000 HALA, JANET	Housing Assistance Payment	$	70.00
184.5030.5242.000 HALA, JANET	Housing Assistance Payment	$	54.00
130.1010.5260.000 HANNAM AUTOMOTIVE LLC	PD #513 repairs	$	1,568.00
130.1010.5260.000 HANNAM AUTOMOTIVE LLC	IADA -2016 Dodge RAM repairs	$	4,472.31
184.5030.5242.000 HARRIS, TOM	Housing Assistance Payment	$	324.00
884.7010.5337.000 HARTFORD- PRIORITY ACCTS	April insurance premium	$	6,351.47
913.1013.5337.000 HARTFORD- PRIORITY ACCTS	April insurance premium	$	369.65
184.5030.5242.000 HATCH, Roger	Housing Assistance Payment	$	373.00
184.5030.5242.000 HATCH, Roger	Housing Assistance Payment	$	234.00
184.5030.5242.000 HATCH, Roger	Housing Assistance Payment	$	201.00
110.2010.5410.000 HAWKEYE TRUCK EQUIPMENT INC	23 chevy 2500 arrow light and labor	$	300.00
110.2010.5565.000 HAWKEYE TRUCK EQUIPMENT INC	23 chevy 2500 arrow light and labor	$	2,187.00
001.1099.5450.000 HEART OF IOWA COMMUNICATIONS CO-OP	Police & Fire Bldg	$	2,130.14
001.4045.5450.000 HEART OF IOWA COMMUNICATIONS CO-OP	Aquatic Center	$	10.00
001.4065.5450.000 HEART OF IOWA COMMUNICATIONS CO-OP	Coliseum	$	62.00
001.6050.5450.000 HEART OF IOWA COMMUNICATIONS CO-OP	City Hall	$	77.42
110.2010.5450.000 HEART OF IOWA COMMUNICATIONS CO-OP	PW Bldg	$	55.04
610.8015.5450.000 HEART OF IOWA COMMUNICATIONS CO-OP	WPCP	$	42.57
610.8016.5450.000 HEART OF IOWA COMMUNICATIONS CO-OP	WPCP	$	25.54
610.8016.5450.000 HEART OF IOWA COMMUNICATIONS CO-OP	PW Bldg	$	33.03
740.8065.5450.000 HEART OF IOWA COMMUNICATIONS CO-OP	WPCP	$	17.03
740.8065.5450.000 HEART OF IOWA COMMUNICATIONS CO-OP	PW Bldg	$	22.02
184.5030.5246.000 Hidalgo, Yesenia	Housing Assistance Payment	$	10.00
184.5030.5242.000 HILLTOP VILLAGE INC	Housing Assistance Payment	$	217.00
184.5030.5242.000 HILLTOP VILLAGE INC	Housing Assistance Payment	$	162.00
184.5030.5242.000 HILLTOP VILLAGE INC	Housing Assistance Payment	$	188.00
184.5030.5242.000 HILLTOP VILLAGE INC	Housing Assistance Payment	$	96.00
184.5030.5242.000 Hinmon, Linda	Housing Assistance Payment	$	260.00
184.5030.5242.000 HISTORIC TALLCORN TOWERS LLP	Housing Assistance Payment	$	316.00
184.5030.5242.000 HISTORIC TALLCORN TOWERS LLP	Housing Assistance Payment	$	273.00
184.5030.5242.000 HISTORIC TALLCORN TOWERS LLP	Housing Assistance Payment	$	270.00
184.5030.5242.000 HISTORIC TALLCORN TOWERS LLP	Housing Assistance Payment	$	257.00
184.5030.5242.000 HISTORIC TALLCORN TOWERS LLP	Housing Assistance Payment	$	247.00
184.5030.5242.000 HISTORIC TALLCORN TOWERS LLP	Housing Assistance Payment	$	247.00
184.5030.5242.000 HISTORIC TALLCORN TOWERS LLP	Housing Assistance Payment	$	350.00
184.5030.5242.000 HISTORIC TALLCORN TOWERS LLP	Housing Assistance Payment	$	247.00
184.5030.5242.000 HISTORIC TALLCORN TOWERS LLP	Housing Assistance Payment	$	225.00
184.5030.5242.000 HISTORIC TALLCORN TOWERS LLP	Housing Assistance Payment	$	222.00
184.5030.5242.000 HISTORIC TALLCORN TOWERS LLP	Housing Assistance Payment	$	149.00
184.5030.5242.000 HISTORIC TALLCORN TOWERS LLP	Housing Assistance Payment	$	112.00
184.5030.5242.000 HISTORIC TALLCORN TOWERS LLP	Housing Assistance Payment	$	102.00
184.5030.5242.000 HISTORIC TALLCORN TOWERS LLP	Housing Assistance Payment	$	237.00
184.5030.5242.000 HISTORIC TALLCORN TOWERS LLP	Housing Assistance Payment	$	65.00
184.5030.5242.000 HISTORIC TALLCORN TOWERS LLP	Housing Assistance Payment	$	387.00
184.5030.5242.000 HISTORIC TALLCORN TOWERS LLP	Housing Assistance Payment	$	416.00
184.5030.5242.000 HISTORIC TALLCORN TOWERS LLP	Housing Assistance Payment	$	392.00
184.5030.5242.000 HISTORIC TALLCORN TOWERS LLP	Housing Assistance Payment	$	574.00
184.5030.5242.000 HISTORIC TALLCORN TOWERS LLP	Housing Assistance Payment	$	469.00
184.5030.5242.000 HISTORIC TALLCORN TOWERS LLP	Housing Assistance Payment	$	439.00
184.5030.5242.000 HISTORIC TALLCORN TOWERS LLP	Housing Assistance Payment	$	148.00
184.5030.5242.000 HISTORIC TALLCORN TOWERS LLP	Housing Assistance Payment	$	79.00
184.5030.5242.000 HOWARD, JAMMIE	Housing Assistance Payment	$	206.00
184.5030.5242.000 HUBBARD MAPLE ST APTS, LLC	Housing Assistance Payment	$	226.00
184.5030.5242.000 HUBBARD MAPLE ST APTS, LLC	Housing Assistance Payment	$	181.00

881.1010.5339.000	Hunter Lane LLC	Paid medical claims	$	148.54
881.1050.5339.000	Hunter Lane LLC	Paid medical claims	$	78.78
184.5030.5242.000	Ibarra-Ledezma, Ramon	Housing Assistance Payment	$	692.00
001.6900.5290.000	ICAP	Annual premium 4/1/23-3/1/24	$	471,791.00
999.1131.000	ICMA 457-Mission Square Retirement	ICMA DEF COMP	$	714.19
999.1131.000	ICMA 457-Mission Square Retirement	ICMA DEF COMP	$	5,423.07
999.1131.000	ICMA 457-Mission Square Retirement	ICMA DEFERRED COMP	$	963.22
999.1131.000	ICMA 457-Mission Square Retirement	ICMA LOAN REPAYMENT	$	352.68
999.1131.000	ICMA 457-Mission Square Retirement	ICMA DEF COMP	$	230.76
999.1131.000	ICMA 457-Mission Square Retirement	ROTH < 50	$	1,439.23
999.1131.000	ICMA 457-Mission Square Retirement	ROTH > 50	$	2,895.22
999.1131.000	ICMA 457-Mission Square Retirement	ICMA DEF COMP	$	1,225.00
999.1131.000	ICMA 457-Mission Square Retirement	ICMA DEF COMP	$	269.23
999.1131.000	ICMA 457-Mission Square Retirement	ROTH %	$	111.05
999.1131.000	ICMA 457-Mission Square Retirement	ROTH < 50	$	1,125.00
999.1131.000	ICMA 457-Mission Square Retirement	ROTH > 50	$	945.00
001.6020.5280.000	IMFOA	benefitted membership	$	50.00
999.1101.000	INTERNAL REVENUE SERVICE	Bi-Weekly Federal Taxes	$	28,526.78
999.1101.000	INTERNAL REVENUE SERVICE	Bi-Weekly Federal Taxes	$	14,310.35
999.1103.000	INTERNAL REVENUE SERVICE	Bi-Weekly Payroll Social Security	$	28,169.96
999.1103.000	INTERNAL REVENUE SERVICE	Bi-Weekly Payroll Social Security	$	5,275.86
999.1107.000	INTERNAL REVENUE SERVICE	Bi-Weekly Payroll Medicare	$	9,173.30
999.1107.000	INTERNAL REVENUE SERVICE	Bi-Weekly Payroll Medicare	$	4,316.12
110.2010.5626.000	IOWA DEPT OF TRANSPORTATION	washer vandal proof F/sign bolts	$	35.16
110.2010.5627.000	IOWA DEPT OF TRANSPORTATION	windmaster crossbracing	$	89.16
110.2010.5626.000	IOWA PRISON INDUSTRIES	regulatory signs	$	118.40
999.1106.000	IOWA PUBLIC EMPLOYEE'S RETIREMENT SY	PRIOR MONTH IPERS CONTRIBUTIONS	$	(641.33)
999.1106.000	IOWA PUBLIC EMPLOYEE'S RETIREMENT SY	PRIOR MONTH IPERS CONTRIBUTIONS	$	33,814.85
999.1106.000	IOWA PUBLIC EMPLOYEE'S RETIREMENT SY	PRIOR MONTH IPERS CONTRIBUTIONS	$	199.45
999.1106.000	IOWA PUBLIC EMPLOYEE'S RETIREMENT SY	PRIOR MONTH IPERS CONTRIBUTIONS	$	5,918.73
999.1106.000	IOWA PUBLIC EMPLOYEE'S RETIREMENT SY	PRIOR MONTH IPERS CONTRIBUTIONS	$	592.71
999.1106.000	IOWA PUBLIC EMPLOYEE'S RETIREMENT SY	PRIOR MONTH IPERS CONTRIBUTIONS	$	58.99
999.1106.000	IOWA PUBLIC EMPLOYEE'S RETIREMENT SY	PRIOR MONTH IPERS CONTRIBUTIONS	$	34,703.13
999.1106.000	IOWA PUBLIC EMPLOYEE'S RETIREMENT SY	PRIOR MONTH IPERS CONTRIBUTIONS	$	199.45
999.1106.000	IOWA PUBLIC EMPLOYEE'S RETIREMENT SY	PRIOR MONTH IPERS CONTRIBUTIONS	$	6,046.84
999.1106.000	IOWA PUBLIC EMPLOYEE'S RETIREMENT SY	ROUNDING	$	(0.01)
999.1106.000	IOWA PUBLIC EMPLOYEE'S RETIREMENT SY	PRIOR MONTH IPERS CONTRIBUTIONS	$	34,817.48
999.1106.000	IOWA PUBLIC EMPLOYEE'S RETIREMENT SY	PRIOR MONTH IPERS CONTRIBUTIONS	$	199.45
999.1106.000	IOWA PUBLIC EMPLOYEE'S RETIREMENT SY	PRIOR MONTH IPERS CONTRIBUTIONS	$	6,692.66
610.8015.5410.000	IOWA PUMP WORKS, INC.	Service evaluation-effluent pump #2	$	465.00
001.2080.5483.000	Iowa Regional Utilities Association	Airport water usage	$	164.32
184.5030.5242.000	JBI COOP ASSOCIATION	Housing Assistance Payment	$	403.00
184.5030.5242.000	JBI COOP ASSOCIATION	Housing Assistance Payment	$	397.00
184.5030.5242.000	JBI COOP ASSOCIATION	Housing Assistance Payment	$	372.00
184.5030.5242.000	JBI COOP ASSOCIATION	Housing Assistance Payment	$	276.00
184.5030.5242.000	JBI COOP ASSOCIATION	Housing Assistance Payment	$	160.00
184.5030.5242.000	JUDGE, MIKE	Housing Assistance Payment	$	298.00
184.5030.5242.000	JUDGE, MIKE	Housing Assistance Payment	$	262.00
184.5030.5242.000	JUDGE, MIKE	Housing Assistance Payment	$	262.00
184.5030.5242.000	JUDGE, MIKE	Housing Assistance Payment	$	257.00
184.5030.5242.000	JUDGE, MIKE	Housing Assistance Payment	$	252.00
184.5030.5242.000	JUDGE, MIKE	Housing Assistance Payment	$	249.00
184.5030.5242.000	JUDGE, MIKE	Housing Assistance Payment	$	299.00
184.5030.5242.000	JUDGE, MIKE	Housing Assistance Payment	$	218.00
184.5030.5242.000	JUDGE, MIKE	Housing Assistance Payment	$	172.00
184.5030.5242.000	JUDGE, MIKE	Housing Assistance Payment	$	157.00
184.5030.5242.000	JUDGE, MIKE	Housing Assistance Payment	$	142.00
184.5030.5242.000	JUDGE, MIKE	Housing Assistance Payment	$	137.00
184.5030.5242.000	JUDGE, MIKE	Housing Assistance Payment	$	125.00
184.5030.5242.000	JUDGE, MIKE	Housing Assistance Payment	$	116.00
184.5030.5242.000	JUDGE, MIKE	Housing Assistance Payment	$	195.00
184.5030.5242.000	JUDGE, MIKE	Housing Assistance Payment	$	72.00
184.5030.5242.000	JUDGE, MIKE	Housing Assistance Payment	$	324.00
184.5030.5242.000	JUDGE, MIKE	Housing Assistance Payment	$	329.00

184.5030.5242.000 JUDGE, MIKE	Housing Assistance Payment	$	327.00
184.5030.5242.000 JUDGE, MIKE	Housing Assistance Payment	$	392.00
184.5030.5242.000 JUDGE, MIKE	Housing Assistance Payment	$	374.00
184.5030.5242.000 JUDGE, MIKE	Housing Assistance Payment	$	345.00
184.5030.5242.000 JUDGE, MIKE	Housing Assistance Payment	$	29.00
184.5030.5242.000 JUDGE, MIKE	Housing Assistance Payment	$	567.00
184.5030.5242.000 JUDGE, MIKE	Housing Assistance Payment	$	406.00
133.4065.5342.000 K&W Electric Inc	COL22001 Col Generator PAY APP 1	$	2,375.00
184.5030.5242.000 Kading Properties LLC	Housing Assistance Payment	$	975.00
184.5030.5242.000 Kading Properties LLC	Housing Assistance Payment	$	801.00
184.5030.5242.000 Kading Properties LLC	Housing Assistance Payment	$	941.00
030.4030.5565.000 KARL CHEVROLET	Upfitter	$	395.00
030.4030.5750.000 KARL CHEVROLET	Chevy Silverado 1500 4WD	$	40,924.90
001.6012.5465.000 KINSER, JESSICA	ICMA meeting Columbus OH Sept 2022	$	522.60
184.5030.5242.000 Klinefelter, Richard J	Housing Assistance Payment	$	450.00
001.1010.5344.000 KOCH Office Group	PD contract and copies	$	361.99
001.6021.5344.000 KOCH Office Group	fINANCE CONTRACT COPIES 12/26-3/25	$	102.63
184.5030.5242.000 KRAMER, Marsha	Housing Assistance Payment	$	138.00
121.2012.5718.000 Landscape Forms Inc	Benches for Downtown	$	7,115.90
363.2012.5718.000 Landscape Forms Inc	Benches for Downtown	$	7,115.90
184.5030.5242.000 LAWSON, RODNEY W	Housing Assistance Payment	$	49.00
184.5030.5242.000 LAWTHERS PROPERTY MANAGEMENT	Housing Assistance Payment	$	184.00
184.5030.5242.000 LAWTHERS PROPERTY MANAGEMENT	Housing Assistance Payment	$	1,030.00
184.5030.5242.000 LBO INVESTMENTS	Housing Assistance Payment	$	585.00
184.5030.5242.000 LBO INVESTMENTS	Housing Assistance Payment	$	467.00
184.5030.5242.000 Lopez, Jaime	Housing Assistance Payment	$	395.00
184.5030.5242.000 Luense, Brant	Housing Assistance Payment	$	562.00
184.5030.5242.000 Luense, Brant	Housing Assistance Payment	$	506.00
184.5030.5242.000 Luense, Brant	Housing Assistance Payment	$	461.00
184.5030.5242.000 Luense, Brant	Housing Assistance Payment	$	358.00
184.5030.5242.000 Luense, Brant	Housing Assistance Payment	$	326.00
184.5030.5242.000 Luense, Brant	Housing Assistance Payment	$	264.00
110.2050.5600.000 MACQUEEN EQUIPMENT	Snowblower shear bolt	$	82.11
110.2070.5600.000 MACQUEEN EQUIPMENT	#73 sweeper parts	$	131.08
110.2070.5600.000 MACQUEEN EQUIPMENT	#74 sweeper parts	$	90.95
610.8016.5565.000 MACQUEEN EQUIPMENT	Vactor level wind shoe	$	66.07
740.8065.5565.000 MACQUEEN EQUIPMENT	Vactor level wind shoe	$	44.04
184.5030.5242.000 Mansager, Cynthia	Housing Assistance Payment	$	370.00
184.5030.5242.000 Manship, Wyatt	Housing Assistance Payment	$	804.00
184.5030.5242.000 Marion Manor 2	Housing Assistance Payment	$	741.00
001.6020.5250.000 MARSHALL COUNTY AUDITOR	Quit claim deeds, mortgage	$	98.00
001.6020.5250.000 MARSHALL COUNTY AUDITOR	Quit claim deeds, mortgage	$	27.00
001.6020.5250.000 MARSHALL COUNTY AUDITOR	Quit claim deeds, mortgage	$	64.00
001.6040.5331.000 MARSHALL COUNTY AUDITOR	County Attorney - qtr ending 1/17/23-4/16/23	$	2,500.00
189.3040.5250.000 MARSHALL COUNTY AUDITOR	Quit claim deeds, mortgage	$	17.00
189.3040.5250.000 MARSHALL COUNTY AUDITOR	Quit claim deeds, mortgage	$	17.00
189.3040.5250.000 MARSHALL COUNTY AUDITOR	Quit claim deeds, mortgage	$	17.00
189.3040.5250.000 MARSHALL COUNTY AUDITOR	Quit claim deeds, mortgage	$	17.00
189.3040.5250.000 MARSHALL COUNTY AUDITOR	Quit claim deeds, mortgage	$	17.00
189.3040.5250.000 MARSHALL COUNTY AUDITOR	Quit claim deeds, mortgage	$	17.00
189.3040.5250.000 MARSHALL COUNTY AUDITOR	Quit claim deeds, mortgage	$	17.00
189.3040.5250.000 MARSHALL COUNTY AUDITOR	Quit claim deeds, mortgage	$	17.00
189.3040.5250.000 MARSHALL COUNTY AUDITOR	Quit claim deeds, mortgage	$	17.00
189.3040.5250.000 MARSHALL COUNTY AUDITOR	Quit claim deeds, mortgage	$	17.00
189.3040.5250.000 MARSHALL COUNTY AUDITOR	Quit claim deeds, mortgage	$	17.00
355.1075.5440.000 MARSHALL COUNTY TREASURER	719 N 4th Ave	$	256.00
355.1075.5440.000 MARSHALL COUNTY TREASURER	107 E Lincoln St	$	612.00
355.1075.5440.000 MARSHALL COUNTY TREASURER	510 Bromley St	$	162.00
355.1075.5440.000 MARSHALL COUNTY TREASURER	519 S 5th St	$	154.00
355.1075.5440.000 MARSHALL COUNTY TREASURER	910 S 2nd Ave	$	594.00
001.5020.5331.000 MARSHALLTOWN CHAMBER OF COMMERCE	TIF Economic Dev Services per res 2019-318	$	12,500.00
001.5900.5331.000 MARSHALLTOWN CHAMBER OF COMMERCE	hotel/motel tax for FY23 Oct-Dec	$	59,000.48
184.5030.5242.000 Marshalltown Lofts, LLC	Housing Assistance Payment	$	564.00
184.5030.5242.000 Marshalltown Lofts, LLC	Housing Assistance Payment	$	52.00

184.5030.5242.000 Marshalltown Lofts, LLC	Housing Assistance Payment	$	3.00
184.5030.5242.000 Marshalltown Lofts, LLC	Housing Assistance Payment	$	57.00
184.5030.5242.000 Marshalltown Lofts, LLC	Housing Assistance Payment	$	149.00
184.5030.5242.000 Marshalltown Lofts, LLC	Housing Assistance Payment	$	176.00
184.5030.5242.000 Marshalltown Lofts, LLC	Housing Assistance Payment	$	773.00
184.5030.5242.000 Marshalltown Lofts, LLC	Housing Assistance Payment	$	164.00
184.5030.5242.000 Marshalltown Lofts, LLC	Housing Assistance Payment	$	773.00
184.5030.5242.000 Marshalltown Lofts, LLC	Housing Assistance Payment	$	527.00
184.5030.5242.000 Marshalltown Lofts, LLC	Housing Assistance Payment	$	336.00
184.5030.5242.000 Marshalltown Lofts, LLC	Housing Assistance Payment	$	323.00
184.5030.5242.000 Marshalltown Lofts, LLC	Housing Assistance Payment	$	297.00
184.5030.5242.000 Marshalltown Lofts, LLC	Housing Assistance Payment	$	257.00
184.5030.5242.000 Marshalltown Lofts, LLC	Housing Assistance Payment	$	211.00
184.5030.5242.000 Marshalltown Lofts, LLC	Housing Assistance Payment	$	773.00
001.2090.5220.000 MARSHALLTOWN WATER WORKS	LANDFILL BILLS	$	262.20
610.8015.5220.000 MARSHALLTOWN WATER WORKS	Sanitary Collections Costs	$	8,095.43
740.8065.5220.000 MARSHALLTOWN WATER WORKS	Storm Sewer Collection Services	$	255.30
001.1010.5410.000 MCATEE TIRE SALES & SERVICE INC	PD #513 tire repair	$	30.00
001.1010.5410.000 MCATEE TIRE SALES & SERVICE INC	PD #510 tire repair	$	30.00
001.1010.5410.000 MCATEE TIRE SALES & SERVICE INC	PD Ford Edge tire repair	$	30.00
001.1010.5410.000 MCATEE TIRE SALES & SERVICE INC	PD Ford F150 oil change, tire rotation	$	65.50
001.1010.5410.000 MCATEE TIRE SALES & SERVICE INC	PD #531 oil change	$	2.00
001.1010.5565.000 MCATEE TIRE SALES & SERVICE INC	PD Ford F150 oil change, tire rotation	$	66.68
001.1010.5565.000 MCATEE TIRE SALES & SERVICE INC	PD #531 oil change	$	49.00
610.8016.5339.000 MCFARLAND CLINIC PC	paid medical claim	$	22.70
740.8065.5339.000 MCFARLAND CLINIC PC	paid medical claim	$	15.14
001.1050.5600.000 MENARDS	US flags	$	73.98
110.2010.5600.000 MENARDS	extreme comfort mats	$	19.98
110.2010.5600.000 MENARDS	tarp canvas, rocker knee pad	$	114.97
110.2010.5600.000 MENARDS	chainsaw chain storage	$	26.97
110.2010.5718.000 MENARDS	3" metal spring clamp	$	3.19
610.8016.5600.000 MENARDS	powergear loper, silt sock	$	91.69
740.8065.5600.000 MENARDS	powergear loper, silt sock	$	61.13
184.5030.5246.000 Mendoza, Yariana Reina	Housing Assistance Payment	$	30.00
110.2030.5600.000 Michael Todd & Co Inc	marking paint & flags for electrical locates	$	203.96
610.8015.5603.000 MIDLAND SCIENTIFIC INC	Lab supplies - flasks	$	179.94
610.8015.5603.000 MIDLAND SCIENTIFIC INC	lab supplies - phosphorus, ferric chloride, sulfur	$	244.70
610.8015.5603.000 MIDLAND SCIENTIFIC INC	Lab supplies - graphite tubes	$	2,341.70
610.8015.5603.000 MIDLAND SCIENTIFIC INC	lab supplies - blue buffer solution iodine	$	126.09
001.6050.5410.000 MIDWEST AUTOMATIC FIRE SPRINKLER CO	Repairs to fire sprinkler system in basement YSS	$	531.50
110.2010.5600.000 Midwest Motor Supply Co	Street dept -nuts, bolts, etc	$	820.74
132.5020.5331.000 Mobius Group	Repair of Shared Wall - 22 N 1st Ave	$	12,800.00
184.5030.5242.000 Moore, Michelle	Housing Assistance Payment	$	372.00
184.5030.5242.000 MTOWN/WESTOWN LLLP	Housing Assistance Payment	$	291.00
184.5030.5242.000 MTOWN/WESTOWN LLLP	Housing Assistance Payment	$	292.00
184.5030.5242.000 MTOWN/WESTOWN LLLP	Housing Assistance Payment	$	317.00
184.5030.5242.000 MTOWN/WESTOWN LLLP	Housing Assistance Payment	$	313.00
184.5030.5242.000 MTOWN/WESTOWN LLLP	Housing Assistance Payment	$	292.00
184.5030.5242.000 MTOWN/WESTOWN LLLP	Housing Assistance Payment	$	278.00
184.5030.5242.000 MTOWN/WESTOWN LLLP	Housing Assistance Payment	$	242.00
184.5030.5242.000 MTOWN/WESTOWN LLLP	Housing Assistance Payment	$	268.00
184.5030.5242.000 MTOWN/WESTOWN LLLP	Housing Assistance Payment	$	268.00
184.5030.5242.000 MTOWN/WESTOWN LLLP	Housing Assistance Payment	$	264.00
184.5030.5242.000 MTOWN/WESTOWN LLLP	Housing Assistance Payment	$	257.00
184.5030.5242.000 MTOWN/WESTOWN LLLP	Housing Assistance Payment	$	249.00
184.5030.5242.000 MTOWN/WESTOWN LLLP	Housing Assistance Payment	$	318.00
184.5030.5242.000 MTOWN/WESTOWN LLLP	Housing Assistance Payment	$	268.00
184.5030.5242.000 MTOWN/WESTOWN LLLP	Housing Assistance Payment	$	321.00
184.5030.5242.000 MTOWN/WESTOWN LLLP	Housing Assistance Payment	$	408.00
184.5030.5242.000 MTOWN/WESTOWN LLLP	Housing Assistance Payment	$	220.00
184.5030.5242.000 MTOWN/WESTOWN LLLP	Housing Assistance Payment	$	350.00
184.5030.5242.000 MTOWN/WESTOWN LLLP	Housing Assistance Payment	$	219.00
184.5030.5242.000 MTOWN/WESTOWN LLLP	Housing Assistance Payment	$	196.00
184.5030.5242.000 MTOWN/WESTOWN LLLP	Housing Assistance Payment	$	203.00

184.5030.5242.000	MTOWN/WESTOWN LLLP	Housing Assistance Payment	$	194.00
184.5030.5242.000	MTOWN/WESTOWN LLLP	Housing Assistance Payment	$	139.00
184.5030.5242.000	MTOWN/WESTOWN LLLP	Housing Assistance Payment	$	121.00
001.1050.5600.000	MUNICIPAL EMERGENCY SERVICES INC	Fire dept canister adapter	$	386.43
999.1105.000	MUNICIPAL FIRE & POLICE RETIREMENT	PRIOR MONTH MFPRSI CONTRIBUTIONS	$	28,802.71
999.1105.000	MUNICIPAL FIRE & POLICE RETIREMENT	PRIOR MONTH MFPRSI CONTRIBUTIONS	$	31,785.44
999.1105.000	MUNICIPAL FIRE & POLICE RETIREMENT	PRIOR MONTH MFPRSI CONTRIBUTIONS	$	28,857.63
999.1105.000	MUNICIPAL FIRE & POLICE RETIREMENT	PRIOR MONTH MFPRSI CONTRIBUTIONS	$	32,527.54
999.1105.000	MUNICIPAL FIRE & POLICE RETIREMENT	PRIOR MONTH MFPRSI CONTRIBUTIONS	$	28,852.61
999.1105.000	MUNICIPAL FIRE & POLICE RETIREMENT	PRIOR MONTH MFPRSI CONTRIBUTIONS	$	32,527.54
610.8016.5600.000	NAPA AUTO PARTS	air tool lube	$	17.62
690.8050.5565.000	NAPA AUTO PARTS	Bus 014 fitting	$	1.85
690.8050.5565.000	NAPA AUTO PARTS	oil and filters	$	71.58
690.8050.5565.000	NAPA AUTO PARTS	brake fluid	$	27.43
690.8050.5565.000	NAPA AUTO PARTS	gas grande shocks	$	301.96
690.8050.5565.000	NAPA AUTO PARTS	gas grande shocks	$	(301.96)
740.8065.5600.000	NAPA AUTO PARTS	air tool lube	$	11.74
184.5030.5242.000	Nelson, LaNeal	Housing Assistance Payment	$	266.00
184.5030.5242.000	NORTH TAMA HOUSING, INC	Housing Assistance Payment	$	184.00
110.2010.5600.000	NORTHERN TOOL & EQUIPMENT CO	rechargable battey for tools	$	389.93
001.2080.5571.000	NUTRIEN AG SOLUTIONS INC	Airport diesel	$	510.72
189.3040.5433.000	Ocampo, Kayla	lead hazard reduction program	$	550.00
184.5030.5242.000	OETKER, DEBRA	Housing Assistance Payment	$	238.00
184.5030.5242.000	OETKER, DEBRA	Housing Assistance Payment	$	135.00
001.4010.5216.000	ONE SOURCE-THE BACKGROUND CHECK CO	application checks	$	15.00
690.8050.5216.000	ONE SOURCE-THE BACKGROUND CHECK CO	application checks	$	15.00
750.8070.5216.000	ONE SOURCE-THE BACKGROUND CHECK CO	application checks	$	30.00
184.5030.5242.000	PALISADE HOLDING CO	Housing Assistance Payment	$	76.00
Payroll	Payroll	Payroll #7	$	329,798.26
184.5030.5242.000	Pebworth Homes LLC	Housing Assistance Payment	$	220.00
184.5030.5246.000	Perez, Eliva Mejia	Housing Assistance Payment	$	31.00
184.5030.5242.000	Pilot Creek Properties	Housing Assistance Payment	$	165.00
184.5030.5242.000	Pizano-Cisneros, Angel	Housing Assistance Payment	$	411.00
001.4065.5611.000	PLUMB SUPPLY	Aquatic center Tru un ball valve	$	262.15
184.5030.5242.000	Plymat Jr , William	Housing Assistance Payment	$	646.00
184.5030.5242.000	Premier Iowa City IA LLC	Housing Assistance Payment	$	392.00
184.5030.5242.000	Premier Iowa City IA LLC	Housing Assistance Payment	$	704.00
184.5030.5242.000	Premier Iowa City IA LLC	Housing Assistance Payment	$	564.00
184.5030.5242.000	Premier Iowa City IA LLC	Housing Assistance Payment	$	369.00
184.5030.5242.000	Premier Iowa City IA LLC	Housing Assistance Payment	$	350.00
184.5030.5242.000	Premier Iowa City IA LLC	Housing Assistance Payment	$	208.00
184.5030.5242.000	Premier Iowa City IA LLC	Housing Assistance Payment	$	4.00
184.5030.5344.000	PREMIER OFFICE EQUIPMENT	Housing contract and copies	$	59.00
184.5030.5242.000	Premier Real Estate Mgmnt	Housing Assistance Payment	$	695.00
184.5030.5242.000	Premier Real Estate Mgmnt	Housing Assistance Payment	$	659.00
184.5030.5242.000	Premier Real Estate Mgmnt	Housing Assistance Payment	$	580.00
184.5030.5242.000	Premier Real Estate Mgmnt	Housing Assistance Payment	$	353.00
184.5030.5242.000	Premier Real Estate Mgmnt	Housing Assistance Payment	$	721.00
184.5030.5242.000	Pyramind Property Solutions Inc	Housing Assistance Payment	$	284.00
184.5030.5242.000	Pyramind Property Solutions Inc	Housing Assistance Payment	$	375.00
184.5030.5242.000	Pyramind Property Solutions Inc	Housing Assistance Payment	$	349.00
610.8015.5342.000	QUAD CITY TESTING LABORATORY	Annual crane & hoist inspections	$	2,639.00
184.5030.5242.000	R & A RENTAL PROPERTIES LLC	Housing Assistance Payment	$	442.00
001.1010.5410.000	RACOM CORPORATION	service labor and parts on PD vehicles	$	1,531.25
001.1010.5565.000	RACOM CORPORATION	nForce interior lightbar	$	278.00
001.1010.5565.000	RACOM CORPORATION	service labor and parts on PD vehicles	$	256.00
001.1010.5410.000	Rainbow Carwash LLC	replaced north side complete hose assy	$	14.65
001.4030.5611.000	Rainbow Carwash LLC	replaced north side complete hose assy	$	14.65
110.2010.5611.000	Rainbow Carwash LLC	replaced north side complete hose assy	$	58.58
690.8050.5611.000	Rainbow Carwash LLC	replaced north side complete hose assy	$	58.57
184.5030.5246.000	Ramirez, Juana	Housing Assistance Payment	$	31.00
184.5030.5242.000	Ramirez, Sergio Rios	Housing Assistance Payment	$	388.00
184.5030.5246.000	Ramirez, Valeria	Housing Assistance Payment	$	77.00
001.1050.5410.000	Rasmusson Service Center	Fire dept Ford F-550 services	$	961.00

001.1050.5410.000	Rasmusson Service Center	Fire dept Ford F-550 services	$	1,852.59
001.4030.5410.000	Raven Creek Repair	Ford F450 ladder truck rear tires	$	124.80
001.4030.5565.000	Raven Creek Repair	Ford F450 ladder truck rear tires	$	645.50
110.2010.5410.000	Raven Creek Repair	Ford F450 ladder truck rear tires	$	124.80
110.2010.5565.000	Raven Creek Repair	Ford F450 ladder truck rear tires	$	645.51
610.8015.5410.000	Raven Creek Repair	Ford F450 ladder truck rear tires	$	62.40
610.8015.5565.000	Raven Creek Repair	Ford F450 ladder truck rear tires	$	322.75
184.5030.5242.000	RD TOLEDO LLP	Housing Assistance Payment	$	352.00
184.5030.5242.000	Redborg, Kirsten	Housing Assistance Payment	$	297.00
184.5030.5242.000	REED, TONY	Housing Assistance Payment	$	262.00
184.5030.5242.000	REED, TONY	Housing Assistance Payment	$	570.00
184.5030.5242.000	REED, TONY	Housing Assistance Payment	$	496.00
184.5030.5242.000	REED, TONY	Housing Assistance Payment	$	437.00
184.5030.5242.000	REED, TONY	Housing Assistance Payment	$	431.00
001.2060.5344.000	RICOH USA INC	Engineering BW copies	$	6.72
001.2060.5344.000	RICOH USA INC	Engineering color copies	$	18.46
110.2060.5344.000	RICOH USA INC	Engineering BW copies	$	6.72
110.2060.5344.000	RICOH USA INC	Engineering color copies	$	18.47
184.5030.5242.000	RIVER BIRCH APTS	Housing Assistance Payment	$	700.00
184.5030.5242.000	RIVER BIRCH APTS	Housing Assistance Payment	$	595.00
184.5030.5242.000	RIVER BIRCH APTS	Housing Assistance Payment	$	400.00
184.5030.5242.000	RIVER BIRCH APTS	Housing Assistance Payment	$	326.00
184.5030.5242.000	RIVER OAKS APARTMENTS	Housing Assistance Payment	$	311.00
184.5030.5242.000	RIVER OAKS APARTMENTS	Housing Assistance Payment	$	226.00
184.5030.5242.000	RIVER OAKS APARTMENTS	Housing Assistance Payment	$	180.00
184.5030.5242.000	RIVER OAKS APARTMENTS	Housing Assistance Payment	$	515.00
184.5030.5242.000	RIVER OAKS APARTMENTS	Housing Assistance Payment	$	672.00
184.5030.5242.000	RIVER OAKS APARTMENTS	Housing Assistance Payment	$	700.00
184.5030.5242.000	RIVER OAKS APARTMENTS	Housing Assistance Payment	$	708.00
184.5030.5242.000	RIVER OAKS APARTMENTS	Housing Assistance Payment	$	755.00
184.5030.5242.000	RMB Cooperative	Housing Assistance Payment	$	733.00
184.5030.5242.000	RMB Cooperative	Housing Assistance Payment	$	435.00
184.5030.5242.000	RMB Cooperative	Housing Assistance Payment	$	232.00
184.5030.5242.000	Roth, Kamaria Mary	Housing Assistance Payment	$	489.00
110.2010.5342.000	SAFETY KLEEN SYSTEMS INC	used oil services	$	436.29
001.1050.5410.000	SANDRY FIRE SUPPLY LLC	Fire dept annual service	$	705.68
030.1050.5750.000	SANDRY FIRE SUPPLY LLC	Thermal Imaging Camera	$	9,388.00
610.8015.5380.000	SCHARNWEBER WATER CONDITIONING INC	March 2023 water softener lease	$	27.00
001.4065.5342.000	SCHENDEL PEST CONTROL INC	Coliseum	$	49.05
001.6050.5342.000	SCHENDEL PEST CONTROL INC	City Hall	$	65.40
184.5030.5242.000	SCHMIDT, Michael T	Housing Assistance Payment	$	471.00
184.5030.5246.000	Schmudlach, Cody	Housing Assistance Payment	$	10.00
184.5030.5246.000	Schwenbach, Sara	Housing Assistance Payment	$	68.00
110.2010.5718.000	SE Jones Industries Inc	socket set	$	306.00
184.5030.5246.000	Shattuck, Tracy	Housing Assistance Payment	$	10.00
001.1010.5132.000	Shetler, Dennis	MPD Drone logo	$	163.40
189.3040.5433.000	Simmons Jamaine	lead hazard relocation program	$	550.00
001.4010.5230.000	SPYGLASS GROUP LLC	Renegotiated internet service	$	2,099.40
001.6050.5230.000	SPYGLASS GROUP LLC	Renegotiated internet service	$	2,099.40
184.5030.5242.000	Squire, Bert	Housing Assistance Payment	$	177.00
184.5030.5242.000	Steffensen, Gary	Housing Assistance Payment	$	428.00
001.1099.5342.000	STONE SANITATION	Police & Fire Bldg	$	118.78
001.4010.5342.000	STONE SANITATION	Library - 105 W Boone St	$	115.56
001.4030.5342.000	STONE SANITATION	roll off	$	624.08
001.5010.5342.000	STONE SANITATION	Central Business District	$	200.00
001.6050.5342.000	STONE SANITATION	City Hall	$	118.78
110.2010.5342.000	STONE SANITATION	Street Dept	$	118.78
110.2010.5342.000	STONE SANITATION	Bullpen Woodland Dr	$	95.00
610.8015.5342.000	STONE SANITATION	Waste Plant	$	118.78
610.8015.5342.000	STONE SANITATION	Marshal 2023 Grit/ Screening removal	$	617.78
001.1010.5132.000	STREICHER'S INC	tactical assault carrier	$	260.00
001.1010.5132.000	STREICHER'S INC	name tag	$	10.00
001.1010.5718.000	STREICHER'S INC	distraction devices, grenades	$	796.81
001.1010.5718.000	STREICHER'S INC	Distraction Devices	$	(47.07)

153.1010.5600.000	SUB CITY	PD donated hospitality	$	141.00
184.5030.5242.000	SUNRISE APARTMENTS, INC	Housing Assistance Payment	$	116.00
184.5030.5242.000	Swift, Scott	Housing Assistance Payment	$	413.00
110.2010.5132.000	THEISENS SUPPLY INC	employee clothing	$	89.98
110.2010.5132.000	THEISENS SUPPLY INC	city provided winter clothing	$	199.99
110.2010.5132.000	THEISENS SUPPLY INC	city provided winter clothing	$	376.96
110.2010.5132.000	THEISENS SUPPLY INC	employee clothing	$	29.98
110.2010.5600.000	THEISENS SUPPLY INC	10 ton forged pintle, pintle plate	$	345.96
610.8016.5132.000	THEISENS SUPPLY INC	gloves, pants, boots	$	68.05
610.8016.5132.000	THEISENS SUPPLY INC	city provided employee clothing	$	167.38
610.8016.5132.000	THEISENS SUPPLY INC	city provided boots	$	98.39
610.8016.5600.000	THEISENS SUPPLY INC	caulk gun and silicone	$	35.97
690.8050.5718.000	THEISENS SUPPLY INC	#181 mic and tool box	$	41.98
690.8050.5718.000	THEISENS SUPPLY INC	returned mic	$	(21.99)
740.8065.5132.000	THEISENS SUPPLY INC	gloves, pants, boots	$	45.36
740.8065.5132.000	THEISENS SUPPLY INC	city provided employee clothing	$	111.58
740.8065.5132.000	THEISENS SUPPLY INC	city provided boots	$	65.60
740.8065.5600.000	THEISENS SUPPLY INC	caulk gun and silicone	$	23.98
610.8016.5410.000	TITAN MACHINERY, INC.	Sewer dept Case 580SN repairs	$	727.92
610.8016.5565.000	TITAN MACHINERY, INC.	Sewer dept Case 580SN repairs	$	300.24
740.8065.5410.000	TITAN MACHINERY, INC.	Sewer dept Case 580SN repairs	$	485.28
740.8065.5565.000	TITAN MACHINERY, INC.	Sewer dept Case 580SN repairs	$	200.16
184.5030.5242.000	Town Apartments Corporation	Housing Assistance Payment	$	51.00
184.5030.5242.000	Town Apartments Corporation	Housing Assistance Payment	$	150.00
001.4040.5441.000	TREASURER ST OF IOWA	Sales/ use tax	$	5.61
001.4040.5442.000	TREASURER ST OF IOWA	Sales/ use tax	$	0.93
610.8015.5441.000	TREASURER ST OF IOWA	Sales/ use tax	$	2,523.78
610.8015.5441.000	TREASURER ST OF IOWA	Sales/ use tax	$	15,142.72
999.1102.000	TREASURER STATE OF IOWA	Bi-Weekly Payroll SIT	$	11,721.41
999.1102.000	TREASURER STATE OF IOWA	Bi-Weekly Payroll SIT	$	5,560.26
690.8050.5210.000	Trending Media Inc	Transit advertising	$	28.00
690.8050.5210.000	Trending Media Inc	Transit advertising	$	122.00
110.2010.5600.000	TRI STATE LOCK SERVICE	keys	$	16.00
184.5030.5242.000	TTLC Coop Housing	Housing Assistance Payment	$	788.00
999.1112.000	UNITED WAY	UNITED WAY	$	772.16
999.1112.000	UNITED WAY	UNITED WAY	$	42.00
999.1112.000	UNITED WAY	UNITED WAY	$	772.16
999.1112.000	UNITED WAY	UNITED WAY	$	42.00
999.1112.000	UNITED WAY	UNITED WAY	$	772.16
999.1112.000	UNITED WAY	UNITED WAY	$	42.00
001.4030.5718.000	Vajgrt, Roger	balance due on sprayer	$	1.00
110.2010.5600.000	Vajgrt, Roger	Stihl chains	$	136.00
110.2010.5600.000	Vajgrt, Roger	Stihl chain	$	60.00
110.2010.5600.000	Vajgrt, Roger	Stihl bar and chains	$	108.00
001.4030.5609.000	Van Diest Supply Co	Opensight herbicide	$	241.88
001.4030.5609.000	Van Diest Supply Co	Ranger pro	$	135.00
001.4030.5609.000	Van Diest Supply Co	Esplanade concentrate	$	395.54
001.1070.5342.000	Veenstra & Kimm Inc	Building inspection services	$	8,534.51
184.5030.5246.000	Velez, Yaralexi	Housing Assistance Payment	$	13.00
001.1010.5230.000	VERIZON WIRELESS- VSTAT	SMS content	$	50.00
184.5030.5246.000	Vung, Cing	Housing Assistance Payment	$	63.00
184.5030.5242.000	Walker, Angela	Housing Assistance Payment	$	298.00
001.6050.5410.000	Walsh Door & Hardware Co	door closer for W exterior walk in Transit	$	447.31
690.8050.5410.000	Walsh Door & Hardware Co	door closer for W exterior walk in Transit	$	447.31
184.5030.5242.000	WEATHERLY, ERIN & BOB	Housing Assistance Payment	$	317.00
184.5030.5242.000	WEATHERLY, ERIN & BOB	Housing Assistance Payment	$	190.00
184.5030.5242.000	WEB III Investments LLC	Housing Assistance Payment	$	550.00
001.1010.5464.000	WEEKLEY, SADIE J	FBI cast training lunches	$	20.00
184.5030.5246.000	Werner, Jessica	Housing Assistance Payment	$	13.00
184.5030.5242.000	White, Amalia	Housing Assistance Payment	$	505.00
001.4040.5358.000	WICKHAM, MICHAEL L	classes 3/23-4/27	$	560.00
001.1099.5482.000	WoodRiver Energy LLC	Police & Fire Bldg 11672	$	3,389.02
001.4045.5482.000	WoodRiver Energy LLC	SWIMMING POOL 7077	$	87.87
184.5030.5242.000	Worent Inc	Housing Assistance Payment	$	143.00

184.5030.5242.000 Worsfold Farm LLC	Housing Assistance Payment	$	384.00
610.8015.5344.000 XEROX CORPORATION	March 2023 Xerox & Copies	$	32.66
110.2010.5565.000 ZIEGLER INC	Caterpillar filters and elements	$	603.68
TOTAL			$1,756,147.37

the City of Marshalltown
POLICE DEPARTMENT

Joel Greer, Mayor
Jessica Kinser, City Administrator
Michael W. Tupper, Chief of Police
909 South 2nd Street
Marshalltown, IA 50158-4911
Tel - (641) 754-5725
Fax - (641) 752-1211

TO: CIVIL SERVICE COMMISSION

FROM: MICHAEL W. TUPPER, CHIEF OF POLICE

RE: CERTIFIED HIRE LIST

POSITION: POLICE OFFICER

AFTER REVIEWING ALL APPLICANTS AND THEIR QUALIFICATIONS, THE FOLLOWING PERSON WAS TESTED, INTERVIEWED AND CONSIDERED TO BEST MEET THE QUALIFICATIONS FOR THE ABOVE LISTED POSITION AND ARE RANKED BY FINAL SCORE AS FOLLOWS;

AVYGAIL SMITH 119.30/151.00

*VETERANS PREFERENCE

THIS LIST WILL BE VALID FOR A PERIOD NOT TO EXCEED APRIL 3, 2024.

CERTIFIED BY CIVIL SERVICE COMMISSION ON THE 3RD DAY OF APRIL 2023.

NANCY HARRIS, CIVIL SERVICE COMMISSION CHAIR

CITY COUNCIL
Dex Walker, Al Hoop, Gabriel Isom, Mike Ladehoff,
Barry Kell, Gary Thompson, Jeff Schneider

the City of Marshalltown

Jill Petermeier, Human Resources Director
City of Marshalltown, Iowa
24 North Center Street
Marshalltown, IA 50158
Tel(641)754-5704 Fax (641)844-1899
jpetermeier@marshalltown-ia.gov

To: Civil Service Commission
From: Kevin Pigors, Transit Administrator
Re: Certified Hire List
Position: Transit Operator - Full Time

After reviewing all applicants and their qualifications, the following person was tested and considered to best meet the qualifications for the above listed position:

Rebekah Gerling (64/112)

This list shall be valid for a period not to exceed April 3, 2024.

Date List Certified by Civil Service Commission:

April 3, 2023

Nancy Harris

Nancy Harris, Civil Service Commission Chair

Attest:

Alicia Hunter

Alicia Hunter, Clerk of the Commission

MARSHALLTOWN
IOWA

Building Division Improvement Value & Fee Summary - March 2023

Total Improvement Value Comparison

	Jan	Feb	Mar	Apr	May	Jun	Jul	Aug	Sep	Oct	Nov	Dec	YTD
2023	$146,879	$52,863	$89,854										**$289,596**
2022	$2,912,000	$937,862	$494,839										**$4,344,701**
2021	$6,335,000	$6,324,000	$18,194,000										**$30,853,000**
2020	$1,921,000	$339,000	$1,660,000										**$3,920,000**
2019	$903,000	$3,132,000	$5,177,000										**$9,212,000**

Total Fees Received Comparison

	Jan	Feb	Mar	Apr	May	Jun	Jul	Aug	Sep	Oct	Nov	Dec	YTD
2023	$1,840	$919	$1,273										**$4,032**
2022	$13,584	$6,803	$4,081										**$24,468**
2021	$48,028	$47,605	$86,696										**$182,329**
2020	$11,506	$3,879	$11,942										**$27,327**
2019	$6,828	$16,366	$27,102										**$50,296**

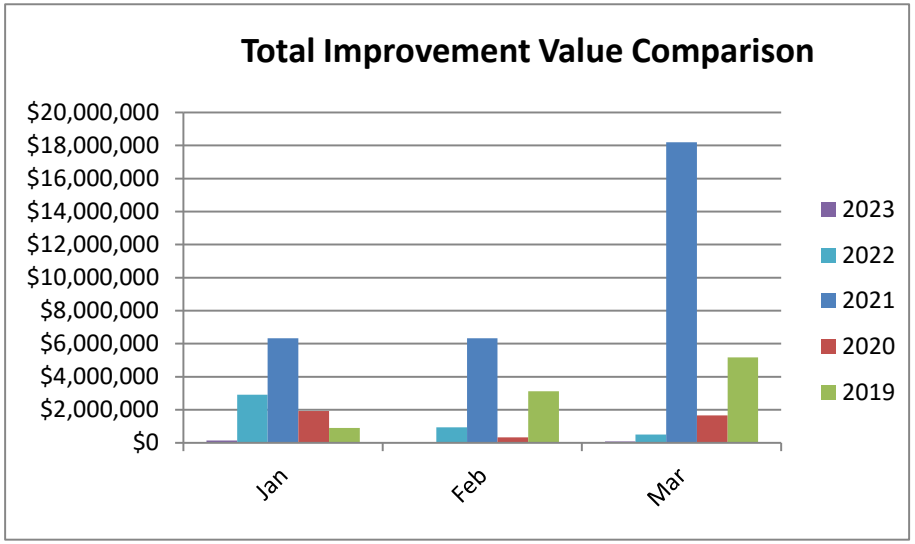

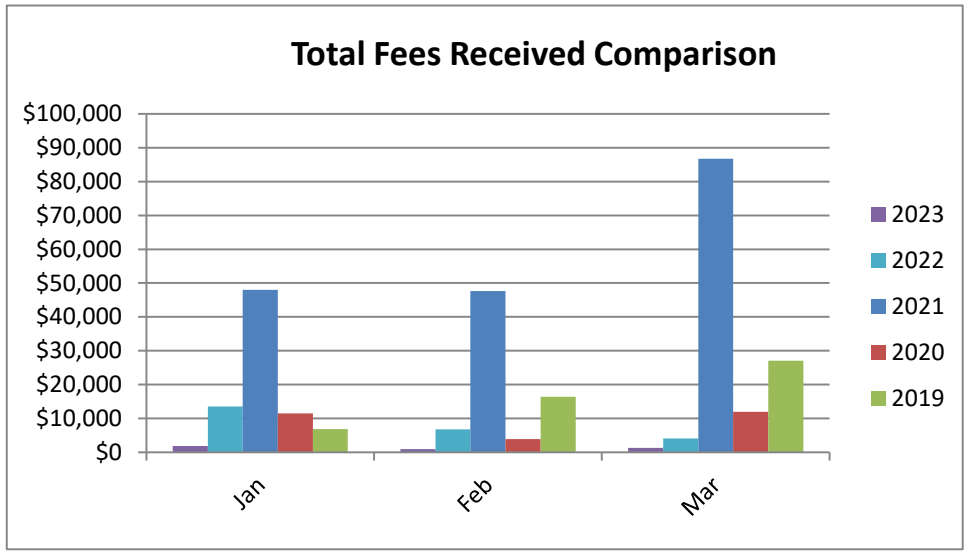

BUILDING REPORT FOR THE MONTH OF MARCH 2023

MARSHALLTOWN
IOWA

PERMIT NUMBER	OWNER OF IMPROVEMENT	LOCATION OF IMPROVEMENT	TYPE OF IMPROVEMENT	NEW DWELLING		ALTER DWELLING	MINOR RES. BUILDING	COMMERCIAL IMPROVEMENT	FEE
BLDR-008378-2023	Ciro DiIorio	514 Sharon Ave	Residential Addition			$20,084.40			$327.00
BLDR-008389-2023	Jeff Erbes	416 N 5th St	Residential Acc Structure				$34,965.00		$483.00
BLDR-008413-2023	Laura Heitland	510 Arlington Dr	Residential Addition			$34,804.52			$463.00
			TOTALS:		**$0.00**	**$54,888.92**	**$34,965.00**	**$0.00**	**$1,273.00**
			TOTAL IMPROVEMENT AMOUNT:			**$89,853.92**			
				Units	Permits	Permits	Permits	Permits	Demo Permits
**Work started without a permit - fee is doubled*			**# OF PERMITS:**	**0**	**0**	**2**	**1**	**0**	**0**

TRADE PERMIT REPORT FOR THE MONTH OF MARCH 2023

MARSHALLTOWN
IOWA

PERMIT NUMBER	LOCATION OF IMPROVEMENT	RESIDENTIAL/ COMMERCIAL	PERMIT TYPE (ELEC., PLUMB., MECH. OR SOLAR)	VALUATION	FEE
ELEC-008369-2023	2821 E Main St	Commercial	Solar	$1,049,838.00	$5,294.19
ELER-008370-2023	1913 S 4th Ave	Residential	Electrical		$85.00
MECH-008367-2023	2009 Blossom Ln	Residential	Mechanical		$62.00
PLMC-008372-2023	207 (209) W Linn St	Commercial	Plumbing	$16,250.00	$126.25
ELER-008375-2023	1007 Frinkle Ave	Residential	Electrical		$62.00
ELER-008374-2023	500 (504) Washington St	Commercial	Electrical	$13,200.00	$111.00
ELER-008379-2023	205 E State St	Residential	Electrical	$10,000.00	$95.00
ELER-008392-2023	1101 E Anson St	Residential	Electrical		$85.00
MECH-008381-2023	3011 S 14th St	Residential	Mechanical		$62.00
ELER-008383-2023	1603 E Nevada St	Residential	Solar		$95.00
ELER-008384-2023	219 Westwood Dr	Residential	Electrical		$62.00
MECH-008385-2023	1012 S 11th Ave	Residential	Mechanical		$62.00
MECH-008387-2023	1309 Iowa Ave W	Commercial	Mechanical	$2,000.00	$55.00
PLMR-008388-2023	113 1/2 N 3rd St	Residential	Plumbing		$62.00
PLMR-008393-2023	6 Iowa Ave E	Commercial	Plumbing	$43,443.00	$315.00
PLMR-008395-2023	214 N 11th Ave	Residential	Plumbing		$62.00
PLMC-008396-2023	906 (908) N 3rd Ave (Car Wash)	Commercial	Plumbing	$85,298.00	$475.00
PLMC-008397-2023	906 (908) N 3rd Ave (Quick Lube)	Commercial	Plumbing	$13,895.00	$115.00
ELER-008398-2023	502 N 1st St	Residential	Electrical		$85.00
ELEC-008399-2023	1306 Iowa Ave W	Commercial	Electrical	$20,840.00	$150.00
MECH-008404-2023	615 W Main St	Residential	Mechanical		$62.00
MECH-008403-2023	208 1/2 N 3r4d Ave	Residential	Mechanical		$62.00
MECH-008401-2023	611 E South St	Residential	Mechanical		$62.00
PLMR-008409-2023	703 Grandview Dr	Residential	Plumbing		$62.00
PLMR-008408-2023	8 S 9th St	Residential	Plumbing		$62.00
ELER-008410-2023	210 N 16th St	Residential	Electrical		$85.00
PLMC-009811-2023	118 W Main St	Commercial	Plumbing	$12,000.00	$105.00
ELEC-008415-2023	701 N 3rd Ave Suite C	Commercial	Electrical	$8,000.00	$85.00
ELER-008146-2023	105 S 4th St	Residential	Electrical		$85.00
ELER-008420-2023	427 Union St	Residential	Electrical		$85.00
ELER-008419-2023	2905 Cooper Ln	Residential	Electrical		$62.00
MECH-008423-2023	1213 W Anson St	Residential	Mechanical		$62.00
PLMC-008424-2023	211 W Main St	Commercial	Plumbing	$17,723.00	$133.61
PLMC-008424-2023	211 W Main St	Commercial	Mechanical	$45,948.00	$274.74
ELER-008421-2023	1612 W Lincoln Way	Residential	Electrical	$1,200.00	$55.00
ELER-008422-2023	2402 Governor Rd	Residential	Electrical	$1,200.00	$55.00
ELER-008431-2023	205 Thomas Dr	Residential	Electrical		$85.00
ELER-008433-2023	402 N 10th Ave	Resdiential	Electrical	$186,960.00	$979.80
ELER-008436-2023	209 W Lincoln St	Resdiential	Electrical		$95.00
			TOTALS:	**$1,527,795.00**	**$10,077.59**

TRADE PERMIT REPORT FOR THE MONTH OF MARCH 2023

MARSHALLTOWN
IOWA

PERMIT NUMBER	LOCATION OF IMPROVEMENT	RESIDENTIAL/ COMMERCIAL	PERMIT TYPE (ELEC., PLUMB., MECH. OR SOLAR)	VALUATION	FEE	
	# Residential Permits	Residential Fees	# of Commercial Permits	Commercial Valuation	Commercial Fees	**Total Fees**
Electrical	15	$2,060.80	3	$42,040.00	$346.00	**$2,406.80**
Plumbing	4	$248.00	6	$188,609.00	$1,269.86	**$1,517.86**
Mechanical	7	$434.00	2	$47,948.00	$329.74	**$763.74**
Solar	1	$95.00	1	$1,049,838.00	$5,294.19	**$5,389.19**
TOTALS	**27**	**$2,837.80**	**12**	**$1,328,435.00**	**$7,239.79**	**$10,077.59**

2023-067

RESOLUTION DELAYING ACCEPTING OF BID AND AWARD OF CONTRACT FOR THE MARSHALLTOWN FAÇADE REHABILITATION PROJECT #ECO21002 IN THE CITY OF MARSHALLTOWN, IOWA

WHEREAS, notice to bidders was duly given as required by law with publication in the Marshalltown Times Republican for the Marshalltown Façade Rehabilitation Project, in the City of Marshalltown, as described in the plans and specifications; and

WHEREAS, there was filed with the City Clerk in response to the published notice to the bidders referred to above, proposals for the construction of the above designated improvements; and

WHEREAS, the accepting of bid and award of contract was scheduled for April 10, 2023, however a time extension is needed for the review of bids.

NOW, THEREFORE, BE IT RESOLVED BY THE COUNCIL OF THE CITY OF MARSHALLTOWN, IOWA:

Section 1. That the recommendation for the Marshalltown Façade Rehabilitation Project shall be presented at the April 24, 2023 council meeting.

Passed this 10th day of April 2023, and signed this _____ day of April 2023.

CITY OF MARSHALLTOWN, IOWA

_____

Joel Greer, Mayor

ATTEST:

_____

Alicia Hunter, City Clerk

MARSHALLTOWN
IOWA

Joel Greer, Mayor
Jessica Kinser, City Administrator
24 North Center Street
Marshalltown, IA 50158
PH 641.754.5701 | FX 641.754.5717

TO: Mayor, Council & City Administrator
FROM: Michelle Spohnheimer, Housing & Community Development Director
DATE: 04/10/23
RE: Resolution delaying the award of contract to 4/24 for Downtown Revitalization Project (DTR) ECO21002

Strategic Plan:

☒ Strategy 1: Expand and improve development in the community.
☒ Strategy 2: Enhance Marshalltown's public image.
☐ Strategy 3: Continually improve and sustain the City's infrastructure, organization, and services.
☐ Strategy 4: Partner with citizens, for-profit, non-profit, and others to improve quality of life.

Plan Objective:
Strategy 1: Invest in Downtown redevelopment. The improvements to the downtown participating buildings promote redevelopment of existing buildings
Strategy 2: Reduce blight and promote safety in neighborhoods. The downtown is a business neighborhood and the DTR grant is focused on blight remediation.

Recommendation: Staff is recommending that the bid award be delayed to April 24, 2023, to allow for further review and discussion with participating owners to occur.

Budget Impact: The City previously allocated $500,000 in matching funding for this project. Other funding includes State grant, rebuild grant and owner contributions.

Description/Background: The City has been working with Region 6 on this project that would revitalize downtown through a public/private partnership. Improvements are proposed to be made to the following buildings:

13-15 S Center St
14-16-18 N Center St
1 W Main St
~~19 W Main St~~ *(This property has been withdrawn from the original project)*
21 W Main St
23 W Main St
25 W Main St
14 W Main St

City staff, Region 6 staff, RDG and property owners are still reviewing the bid submission to determine a final recommendation on award. Initially an award recommendation was to be presented 4/10. The bids are valid for 30 days which is 4/27.

Joel Greer, Mayor
Jessica Kinser, City Administrator
24 North Center Street
Marshalltown, IA 50158
PH 641.754.5701 | FX 641.754.5717

MARSHALLTOWN
IOWA

TO: Mayor, Council & City Administrator
FROM: Michelle Spohnheimer, Housing & Community Development Director
DATE: 02/27/23
RE: Resolution ordering construction for DTR project (ECO 21-002)

Strategic Plan:

☒ Strategy 1: Expand and improve development in the community.
☒ Strategy 2: Enhance Marshalltown's public image.
☐ Strategy 3: Continually improve and sustain the City's infrastructure, organization, and services.
☐ Strategy 4: Partner with citizens, for-profit, non-profit, and others to improve quality of life.

Plan Objective:

Strategy 1: Invest in Downtown redevelopment. The improvements to the downtown participating buildings promote redevelopment of existing buildings
Strategy 2: Reduce blight and promote safety in neighborhoods. The downtown is a business neighborhood and the DTR grant is focused on blight remediation.

Recommendation: Staff is recommending approval of the resolution to order construction for the Downtown Revitalization Project – Façade Rehabilitation and begin the bid process. This is a rebid from 2022.

Budget Impact: The City previously allocated $500,000 in matching funding for this project.

Description/Background: The City has been working with Region 6 on this project that would revitalize downtown through a public/private partnership. Improvements are proposed to be made to the following buildings:

13-15 S Center St
14-16-18 N Center St
1 W Main St
~~19 W Main St~~ *(This property has been withdrawn from the original project)*
21 W Main St
23 W Main St
25 W Main St
14 W Main St

This project was let in 2022 and due to the only bid coming in on August 16th, 2022 at $1,867,250 for base + alternates which was $629,750 over the architect's estimate – the bid was not awarded.

Plan preparation for this project was performed by RDG, an architectural firm. Plan and grant administration for this project is being performed by Region 6. The substantial completion date is June 30th, 2024.

We recommend the following bid timeline:
- Ordering construction at the February 27th, 2023 council meeting
- Pre-bid conference at 2:00 PM on March 9th, 2023
- Public Hearing at the March 13th, 2023 council meeting
- Receiving/Opening Bids at 2:00 PM, March 21st, 2023
- Awarding Bid at the April 10th, 2023 council meeting.

Attachments: Official Notice of Hearing & Letting

NOTICE TO BIDDERS AND NOTICE OF PUBLIC HEARING

Sealed bids for the Marshalltown Façade Rehabilitation project must be received and filed before **2:00 PM** local time on **March 21, 2023**, to the City Clerk at City Hall, 24 North Center Street, Marshalltown, Iowa. Bidders wishing to drop their bids off in person at City Hall should contact the City at 641-754-5701 to arrange for a time to transfer the bid. City Hall may have limited access to the public, but business operations are being conducted during the workweek. Staff will be available to assist bidders. Bids received after the deadline for submission of bids as stated herein shall not be considered and shall be returned to the late bidder unopened. The bidder shall hold the City harmless for failing to meet the deadline due to delayed delivery service.

The City intends to open, read aloud, and tabulate the sealed bids at 2:05 PM on March 21, 2023, in the City Hall, for further consideration by the City Council at a future meeting, scheduled at 5:30 PM on April 10, 2023. Consideration of the Award of contract would subsequently occur by action of the City Council at the same meeting, or at a later date and time announced at said meeting.

Notice is hereby given that a public hearing will be held by the City on the proposed contract documents (including the plans, specifications, and form of contract) and estimated construction cost for the Project at its regular meeting at 5:30 PM on March 13, 2023, in the Council Chambers at 10 West State Street. At the hearing, the City will receive and consider any objections made by any interested party, to the Plans and Specifications, proposed Form of Contract, and the Estimate of the Construction Cost for the project.

Work on the improvement shall commence within ten days of the issuance of a written Notice to Proceed. The Notice to Proceed will be issued upon approval of the contract by the Council and be completed as stated below.

The Work of the Project is defined by the Contract Documents and includes, but is not limited to, the following:

> Facade Rehabilitation: Historic rehabilitation of existing brick and wood framed buildings. Rehabilitation will consist of exterior restoration and improvements, including but not limited to selective demolition; cleaning, repair, and repointing of stone and brick masonry; repair and replacement of doors, wood windows and storefronts; aluminum windows and storefronts; replacement of awnings and canopies; joint sealants; painting; lighting fixtures; roof replacement; and related construction.
>
> The Work includes historic buildings being reviewed under Section 106 NHPA and HUD regulations for NEPA (24 CFR Part 58.5[b]). The Work will follow historic guidelines established by the Secretary of the Interior and Standards for the Treatment of Historic Properties.

Bids will be received for a single prime contract.

Bidding Documents may be examined at the offices of RDG Planning & Design, at plan rooms across the state and through the City of Marshalltown's website: https://www.marshalltown-ia.gov/Bids.aspx.

Bidders may obtain Bidding Documents at the office of the printer: Beeline and Blue, 2507 Ingersoll Avenue, Des Moines, Iowa, 50312, or by calling (515) 244-1611, from 8:00 AM until 5:00 PM, Monday through Friday, or through their on-line plan room at www.beelineandblue.com. Bidding Documents will be available February 28, 2023.

A Pre-Bid Conference will be held at **2:00 PM** on **March 9, 2023** at the site. Participation by General Contractors, Sub-Contractors and Suppliers is strongly encouraged, but is not mandatory. Please reach out to the point of contact below for the information if you wish to join.

Refer to other bidding requirements described in the Project Manual, Division 01 Section "Instructions to Bidders."

Each bidder shall accompany its bid with bid security as defined in Iowa Code Section 26.8, as security that the successful bidder will enter into a contract for the work bid upon and will furnish after the award of contract a corporate surety bond, in a form acceptable to the City, for the faithful performance of the contract, in an amount

equal to 100% of the amount of the contract. The bidder's security shall be in the amount fixed in the Instruction to Bidders, in the amount of five percent (5%) of the total bid and shall be in the form of a cashier's check or a certified check drawn on an FDIC insured bank in Iowa or on an FDIC insured bank chartered under the laws of the United States; or a certified share draft drawn on a credit union in Iowa or chartered under the laws of the United States; or a bid bond on the form provided in the contract documents with corporate surety satisfactory to the City. The bid shall contain no condition except as provided in the specifications.

Performance and Payment Bond Requirement: 100% of contract amount.

No bid may be withdrawn for a period of 30 calendar days after the date of opening.

Award of contract is tentatively scheduled for **April 10, 2023**.

This project is funded, in part, by a Community Development Block Grant (CDBG). The requirements and provisions of the CDBG shall apply to this project, which include federal rules and regulations pertaining to labor relations such as the payment of "Davis-Bacon" prevailing wages.

Minority Owned and Female Owned Business participation is encouraged. Bidders shall make a good faith documented effort to encourage participation of minority owned and female owned businesses.

This project is sales tax exempt. The Owner will issue an exemption certificate for the purchase or use of building materials, supplies, and equipment that will be used in the performance of the construction contract.

By virtue of statutory authority, a preference will be given to products and provisions grown and coal produced within the state of Iowa.

Failure to submit a fully completed Bidder Status Form with the bid may result in the bid being deemed nonresponsive and rejected.

The project shall be substantially complete by **June 30, 2024**.

The City reserves the right to reject any or all bids, to waive informalities, and to enter into such contract, or contracts, as it shall deem to be in the best interest of the City.

Point of Contact:
Michelle Spohnheimer, Housing & Community Development Director, phone: 641-754-5756, email: mspohnheimer@marshalltown-ia.gov

Owner:
City of Marshalltown
24 North Center Street
Marshalltown, Iowa 50158
Phone: 641-754-5701
www.marshalltown-ia.gov

Architect of Record:
RDG Planning & Design, Inc.
301 Grand Avenue
Des Moines, Iowa 50309
Phone: 515-288-3141
www.rdgusa.com

SECTION 3 LANGUAGE FOR PROCUREMENT DOCUMENTS
(This language is to be included in all procurement documents/ solicitations)

A. The work to be performed under this contract is subject to the requirements of section 3 of the Housing and Urban Development Act of 1968, as amended, 12 U.S.C. 1701u (section 3). The purpose of section 3 is to ensure that employment and other economic opportunities generated by HUD assistance or HUD-assisted projects covered by section 3, shall, to the greatest extent feasible, be directed to low- and very low-income persons, particularly persons who are recipients of HUD assistance for housing.

B. The parties to this contract agree to comply with HUD's regulations in 24 CFR part 135, which implement section 3. As evidenced by their execution of this contract, the parties to this contract certify that they are under no contractual or other impediment that would prevent them from complying with the part 135 regulations.

C. The contractor agrees to send to each labor organization or representative of workers with which the contractor has a collective bargaining agreement or other understanding, if any, a notice advising the labor organization or workers' representative of the contractor's commitments under this section 3 clause, and will post copies of the notice in conspicuous places at the work site where both employees and applicants for training and employment positions can see the notice. The notice shall describe the section 3 preference, shall set forth minimum number and job titles subject to hire, availability of apprenticeship and training positions, the qualifications for each; and the name and location of the person(s) taking applications for each of the positions; and the anticipated date the work shall begin.

D. The contractor agrees to include this section 3 clause in every subcontract subject to compliance with regulations in 24 CFR part 135, and agrees to take appropriate action, as provided in an applicable provision of the subcontract or in this section 3 clause, upon a finding that the subcontractor is in violation of the regulations in 24 CFR part 135. The contractor will not subcontract with any subcontractor where the contractor has notice or knowledge that the subcontractor has been found in violation of the regulations in 24 CFR part 135.

E. The contractor will certify that any vacant employment positions, including training positions, that are filled (1) after the contractor is selected but before the contract is executed, and (2) with persons other than those to whom the regulations of 24 CFR part 135 require employment opportunities to be directed, were not filled to circumvent the contractor's obligations under 24 CFR part 135.

F. Noncompliance with HUD's regulations in 24 CFR part 135 may result in sanctions, termination of this contract for default, and debarment or suspension from future HUD assisted contracts.

G. With respect to work performed in connection with section 3 covered Indian housing assistance, section 7(b) of the Indian Self-Determination and Education Assistance Act (25 U.S.C. 450e) also applies to the work to be performed under this contract. Section 7(b) requires that to the greatest extent feasible (i) preference and opportunities for training and employment shall be given to Indians, and (ii) preference in the award of contracts and subcontracts shall be given to Indian organizations and Indian-owned Economic Enterprises. Parties to this contract that are subject to the provisions of section 3 and section 7(b) agree to comply with section 3 to the maximum extent feasible, but not in derogation of compliance with section 7(b).

Section 3 Businesses are encourage to respond to this proposal. A Section 3 business is a business that is:

51% owned by Section 3 residents*
Whose permanent, full-time staff is comprised of at least 30% Section 3 residents*
Has committed 25% of the dollar amount of its subcontracts to Section 3 businesses

*A Section 3 resident is defined as a public housing resident or someone with a household income that is less than 80% of the area median income. Businesses that believe they meet the Section 3 criteria are encouraged to register as a Section 3 Business through HUD's website:
https://portalapps.hud.gov/Sec3BusReg/BRegistry/RegisterBusiness

Published by the order of the City of Marshalltown, Iowa, on this 3rd day of March, 2023.

Marshalltown, Iowa - Downtown Revitalization - Facades (2023)

Statement of Probable Construction Costs

RDG#: 3005.009.00

Due to uncertainty in the availability of construction labor & materials and the resulting impact on inflation and construction costs, the Architect cannot and does not warrant or represent that the Cost of the Work will be within the Owner's budget for the Work.

Building Name / Owner	Address / Historic Designation	Base Bid Construction Cost w/out contingency (rounded)	Alternates Construction Cost w/out contingency (rounded)	Base Bid only contingencies (rounded)
Tobacco Outlet	19 W Main			
		$0		
Waleed	PRIORTY 1		$0	$0
Staging 2 Sell It	1 W Main			
		$169,500		
Struebing	PRIORITY 1		$183,000	$30,500
Salon	14 N Center			
		$32,000		
Struebing	Priority 1 Building		$34,000	$6,000
Vacant	16 N Center			
		$31,000		
Struebing	Priority 1 Building		$38,000	$5,500
The Paw Spa	18 N Center			
		$32,000		
Struebing	Priority 1 Building		$41,500	$6,000
Pentz Appliance	13 - 15 S Center			
		$184,500		

Marshalltown, Iowa - Downtown Revitalization - Facades (2023)

Statement of Probable Construction Costs

RDG#: 3005.009.00

Due to uncertainty in the availability of construction labor & materials and the resulting impact on inflation and construction costs, the Architect cannot and does not warrant or represent that the Cost of the Work will be within the Owner's budget for the Work.

Building Name / Owner	Address / Historic Designation	Base Bid Construction Cost w/out contingency (rounded)	Alternates Construction Cost w/out contingency (rounded)	Base Bid only contingencies (rounded)
Tim & Dave	Priority 2 Building		$261,500	$33,000
Smokin G's BBQ	25 W Main	$64,000		
Kim & Jerry	Priority 1 Building		$43,500	$11,500
Vacant	23 W Main	$102,000		
City	Priority 1 Building		$60,500	$18,500
Vacant	21 W Main	$82,000		
City	Priority 1 Building		$130,000	$15,000
Stepping Stones	14 W Main	$81,500		
Mindy U	Priority 2 Building		$16,000	$14,500
	sub totals	$778,500	$808,000	$140,500
	total base bid + alternates		$1,586,500	
	total base bid + contingency			$919,000
	total base bid + alternates + contingency			$1,727,000

RDG PLANNING ● DESIGN

project manual

Marshalltown, Iowa
Façade Rehabilitation
Downtown Revitalization

Date:	**February 20, 2023**
RDG Project No.:	**3005.009.00**

RDG Planning & Design, Inc.
301 Grand Avenue
Des Moines, Iowa 50309-1718 Tel 515.288.3141 www.rdgusa.com

SECTION 00 01 01 – PROJECT TITLE PAGE

PROJECT:	Marshalltown, Iowa Façade Rehabilitation Downtown Revitalization
RDG Project No.:	3005.009.00
OWNER:	City of Marshalltown 24 North Center Street Marshalltown, IA 50158 641-754-5701 www.marshalltown-ia.gov
DATE:	February 20, 2023
ARCHITECT:	RDG Planning & Design, Inc. 301 Grand Avenue Des Moines, Iowa 50309-1718 515-288-3141 www.rdgusa.com
Point of Contact:	Scotney Fenton, AIA sfenton@rdgusa.com 515-309-3223

END OF DOCUMENT 00 01 01

SECTION 00 01 10 – TABLE OF CONTENTS

Prepared By	Section No.	Section Title
PROCUREMENT AND CONTRACTING DOCUMENTS GROUP		
	DIVISION 00	**PROCUREMENT AND CONTRACTING REQUIREMENTS**
	INTRODUCTORY INFORMATION	
ARCH	00 01 01	PROJECT TITLE PAGE
ARCH	00 01 10	TABLE OF CONTENTS
	PROCUREMENT REQUIREMENTS	
	00 11 13	NOTICE TO BIDDERS AND NOTICE OF PUBLIC HEARING
ARCH	00 21 13	INSTRUCTIONS TO BIDDERS
ARCH	00 26 00	PROCUREMENT SUBSTITUTION PROCEDURES
	00 31 26	EXISTING ASBESTOS INFORMATION
ARCH	00 41 13	BID FORM - STIPULATED SUM (SINGLE-PRIME CONTRACT)
	00 45 13	DOL BIDDER STATUS FORM 309-6001 (09-15)
	00 45 15	INTENT TO COMPLY
	CONTRACTING REQUIREMENTS	
ARCH	00 52 13	AGREEMENT FORM
		AIA DOCUMENT A101
		AIA DOCUMENT A101 EXHIBIT A – INSURANCE AND BONDS
ARCH	00 61 13	BOND FORMS
ARCH	00 72 13	GENERAL CONDITIONS
ARCH	00 72 15	AIA DOCUMENT A201 EDITED WITH SUPPLEMENTARY CONDITIONS
	00 73 15	SPECIAL CONDITIONS OF THE CONTRACT
	00 73 43	WAGE RATE REQUIREMENTS (MARSHALL COUNTY)
	00 73 73	FEDERAL LABOR STANDARDS PROVISIONS
SPECIFICATIONS GROUP		
GENERAL REQUIREMENTS SUBGROUP		
	DIVISION 01	**GENERAL REQUIREMENTS**
ARCH	01 10 00	SUMMARY
ARCH	01 21 00	ALLOWANCES
ARCH	01 23 00	ALTERNATES
ARCH	01 25 00	SUBSTITUTION PROCEDURES
ARCH	01 26 00	CONTRACT MODIFICATION PROCEDURES
ARCH	01 29 00	PAYMENT PROCEDURES

ARCH	01 31 00	PROJECT MANAGEMENT AND COORDINATION
ARCH	01 32 00	CONSTRUCTION PROGRESS DOCUMENTATION
ARCH	01 32 33	PHOTOGRAPHIC DOCUMENTATION
ARCH	01 33 00	SUBMITTAL PROCEDURES
ARCH	01 33 01	ELECTRONIC FILE AGREEMENT
ARCH	01 35 91	HISTORIC TREATMENT PROCEDURES
ARCH	01 40 00	QUALITY REQUIREMENTS
ARCH	01 42 00	REFERENCES
ARCH	01 50 00	TEMPORARY FACILITIES AND CONTROLS
ARCH	01 60 00	PRODUCT REQUIREMENTS
ARCH	01 73 00	EXECUTION
ARCH	01 74 19	CONSTRUCTION WASTE MANAGEMENT AND DISPOSAL
ARCH	01 77 00	CLOSEOUT PROCEDURES
ARCH	01 77 19	CLOSEOUT REQUIREMENTS
ARCH	01 78 23	OPERATION AND MAINTENANCE DATA
ARCH	01 78 39	PROJECT RECORD DOCUMENTS

FACILITY CONSTRUCTION SUBGROUP

DIVISION 02 EXISTING CONDITIONS

ARCH	02 41 19	SELECTIVE DEMOLITION

DIVISION 03 CONCRETE

NOT APPLICABLE

DIVISION 04 MASONRY

ARCH	04 01 20	MAINTENANCE OF UNIT MASONRY
ARCH	04 01 40	MAINTENANCE OF STONE ASSEMBLIES
ARCH	04 03 21	CONSERVATION OF HISTORIC TERRA COTTA MASONRY
ARCH	04 03 42	CONSERVATION OF HISTORIC STONE MASONRY

DIVISION 05 METALS

ARCH	05 50 00	METAL FABRICATIONS

DIVISION 06 WOOD, PLASTICS, AND COMPOSITES

ARCH	06 03 12	HISTORIC WOOD REPAIR
ARCH	06 05 65	SLATWALL PANELING
ARCH	06 10 00	ROUGH CARPENTRY
ARCH	06 16 00	SHEATHING
ARCH	06 20 13	FINISH CARPENTRY
ARCH	06 40 23	INTERIOR ARCHITECTURAL WOODWORK

DIVISION 07 THERMAL AND MOISTURE PROTECTION

ARCH	07 01 50	PREPARATION FOR REROOFING
ARCH	07 19 00	WATER REPELLENTS
ARCH	07 21 00	THERMAL INSULATION
ARCH	07 24 19	EXTERIOR INSULATION AND FINISH SYSTEM
ARCH	07 25 00	WEATHER BARRIERS
ARCH	07 42 13	FORMED METAL WALL PANELS
ARCH	07 46 46	FIBER-CEMENT SIDING
ARCH	07 53 23	EPDM ROOFING
ARCH	07 62 00	SHEET METAL FLASHINGS AND TRIM
ARCH	07 92 00	JOINT SEALANTS

DIVISION 08 OPENINGS

ARCH	08 03 14	HISTORIC TREATEMENT OF WOOD DOORS
ARCH	08 03 52	HISTORIC TREATEMENT OF WOOD WINDOWS
ARCH	08 14 33	STILE AND RAIL WOOD DOORS
ARCH	08 41 13	ALUMINUM-FRAMED ENTRANCES AND STOREFRONTS
ARCH	08 45 23	FIBERGLASS SANDWICH PANEL ASSEMBLIES
ARCH	08 52 13	ALUMINUM CLAD WOOD WINDOWS
ARCH	08 71 00	DOOR HARDWARE
ARCH	08 80 00	GLAZING
ARCH	08 81 13	DECORATIVE GLASS GLAZING
ARCH	08 87 13	SOLAR CONTROL FILMS

DIVISION 09 FINISHES

ARCH	09 01 20	MAINTENANCE OF PLASTER AND STUCCO
ARCH	09 24 23	PORTLAND CEMENT STUCCO
ARCH	09 30 13	CERAMIC TILING
ARCH	09 91 00	PAINTS AND COATINGS

DIVISION 10 SPECIALTIES

ARCH	10 73 13	AWNINGS

DIVISION 11 EQUIPMENT

NOT APPLICABLE

DIVISION 12 FURNISHINGS

NOT APPLICABLE

DIVISION 13 SPECIAL CONSTRUCTION

NOT APPLICABLE

DIVISION 14 CONVEYING EQUIPMENT

NOT APPLICABLE

FACILITY SERVICES SUBGROUP

DIVISION 21 FIRE SUPPRESSION

NOT APPLICABLE

DIVISION 22 PLUMBING

NOT APPLICABLE

DIVISION 23 HEATING, VENTILATING, AND AIR CONDITIONING (HVAC)

NOT APPLICABLE

DIVISION 25 INTEGRATED AUTOMATION

NOT APPLICABLE

DIVISION 26 ELECTRICAL

NOT APPLICABLE

DIVISION 27 COMMUNICATIONS

NOT APPLICABLE

DIVISION 28 ELECTRONIC SAFETY AND SECURITY

NOT APPLICABLE

SITE AND INFRASTRUCTURE SUBGROUP

DIVISION 31 EARTHWORK

NOT APPLICABLE

DIVISION 32 EXTERIOR IMPROVEMENTS

NOT APPLICABLE

DIVISION 33 UTILITIES

NOT APPLICABLE

DIVISION 34 TRANSPORTATION

NOT APPLICABLE

DIVISION 35 WATERWAY AND MARINE CONSTRUCTION

NOT APPLICABLE

PROCESS EQUIPMENTSUBGROUP

DIVISION 40 PROCESS INTEGRATION

NOT APPLICABLE

DIVISION 41 MATERIAL PROCESSING AND HANDLING EQUIPMENT

NOT APPLICABLE

DIVISION 42 PROCESS HEATING, COOLING, AND DRYING EQUIPMENT

NOT APPLICABLE

DIVISION 43 PROCESS GAS AND LIQUID HANDLING, PURIFICATION, AND STORAGE EQUIPMENT

NOT APPLICABLE

DIVISION 44 POLLUTION AND WASTE CONTROL EQUIPMENT

NOT APPLICABLE

DIVISION 45 INDUSTRY-SPECIFIC MANUFACTURING EQUIPMENT

NOT APPLICABLE

DIVISION 46 WATER AND WASTEWATER EQUIPMENT

NOT APPLICABLE

DIVISION 48 ELECTRICAL POWER GENERATION

NOT APPLICABLE

Abbreviation:	Name:	Discipline:
ARCH	RDG Planning & Design	Architect

ND OF SECTION 00 01 10

NOTICE TO BIDDERS AND NOTICE OF PUBLIC HEARING

Sealed bids for the Marshalltown Façade Rehabilitation project must be received and filed before **2:00 PM** local time on **March 21, 2023**, to the City Clerk at City Hall, 24 North Center Street, Marshalltown, Iowa. Bidders wishing to drop their bids off in person at City Hall should contact the City at 641-754-5701 to arrange for a time to transfer the bid. City Hall may have limited access to the public, but business operations are being conducted during the workweek. Staff will be available to assist bidders. Bids received after the deadline for submission of bids as stated herein shall not be considered and shall be returned to the late bidder unopened. The bidder shall hold the City harmless for failing to meet the deadline due to delayed delivery service.

The City intends to open, read aloud, and tabulate the sealed bids at 2:05 PM on March 21, 2023, in the City Hall, for further consideration by the City Council at a future meeting, scheduled at 5:30 PM on April 10, 2023. Consideration of the Award of contract would subsequently occur by action of the City Council at the same meeting, or at a later date and time announced at said meeting.

Notice is hereby given that a public hearing will be held by the City on the proposed contract documents (including the plans, specifications, and form of contract) and estimated construction cost for the Project at its regular meeting at 5:30 PM on March 13, 2023, in the Council Chambers at 10 West State Street. At the hearing, the City will receive and consider any objections made by any interested party, to the Plans and Specifications, proposed Form of Contract, and the Estimate of the Construction Cost for the project.

Work on the improvement shall commence within ten days of the issuance of a written Notice to Proceed. The Notice to Proceed will be issued upon approval of the contract by the Council and be completed as stated below.

The Work of the Project is defined by the Contract Documents and includes, but is not limited to, the following:

> Facade Rehabilitation: Historic rehabilitation of existing brick and wood framed buildings. Rehabilitation will consist of exterior restoration and improvements, including but not limited to selective demolition; cleaning, repair, and repointing of stone and brick masonry; repair and replacement of doors, wood windows and storefronts; aluminum windows and storefronts; replacement of awnings and canopies; joint sealants; painting; lighting fixtures; roof replacement; and related construction.
>
> The Work includes historic buildings being reviewed under Section 106 NHPA and HUD regulations for NEPA (24 CFR Part 58.5[b]). The Work will follow historic guidelines established by the Secretary of the Interior and Standards for the Treatment of Historic Properties.

Bids will be received for a single prime contract.

Bidding Documents may be examined at the offices of RDG Planning & Design, at plan rooms across the state and through the City of Marshalltown's website: https://www.marshalltown-ia.gov/Bids.aspx.

Bidders may obtain Bidding Documents at the office of the printer: Beeline and Blue, 2507 Ingersoll Avenue, Des Moines, Iowa, 50312, or by calling (515) 244-1611, from 8:00 AM until 5:00 PM, Monday through Friday, or through their on-line plan room at www.beelineandblue.com. Bidding Documents will be available February 28, 2023.

A Pre-Bid Conference will be held at **2:00 PM** on **March 9, 2023** at the site. Participation by General Contractors, Sub-Contractors and Suppliers is strongly encouraged, but is not mandatory. Please reach out to the point of contact below for the information if you wish to join.

Refer to other bidding requirements described in the Project Manual, Division 01 Section "Instructions to Bidders."

Each bidder shall accompany its bid with bid security as defined in Iowa Code Section 26.8, as security that the successful bidder will enter into a contract for the work bid upon and will furnish after the award of contract a corporate surety bond, in a form acceptable to the City, for the faithful performance of the contract, in an amount equal to 100% of the amount of the contract. The bidder's security shall be in the amount fixed in the Instruction to Bidders, in the

amount of five percent (5%) of the total bid and shall be in the form of a cashier's check or a certified check drawn on an FDIC insured bank in Iowa or on an FDIC insured bank chartered under the laws of the United States; or a certified share draft drawn on a credit union in Iowa or chartered under the laws of the United States; or a bid bond on the form provided in the contract documents with corporate surety satisfactory to the City. The bid shall contain no condition except as provided in the specifications.

Performance and Payment Bond Requirement: 100% of contract amount.

No bid may be withdrawn for a period of 30 calendar days after the date of opening.

Award of contract is tentatively scheduled for **April 10, 2023**.

This project is funded, in part, by a Community Development Block Grant (CDBG). The requirements and provisions of the CDBG shall apply to this project, which include federal rules and regulations pertaining to labor relations such as the payment of "Davis-Bacon" prevailing wages.

Minority Owned and Female Owned Business participation is encouraged. Bidders shall make a good faith documented effort to encourage participation of minority owned and female owned businesses.

This project is sales tax exempt. The Owner will issue an exemption certificate for the purchase or use of building materials, supplies, and equipment that will be used in the performance of the construction contract.

By virtue of statutory authority, a preference will be given to products and provisions grown and coal produced within the state of Iowa.

Failure to submit a fully completed Bidder Status Form with the bid may result in the bid being deemed nonresponsive and rejected.

The project shall be substantially complete by **June 30, 2024**.

The City reserves the right to reject any or all bids, to waive informalities, and to enter into such contract, or contracts, as it shall deem to be in the best interest of the City.

Point of Contact:
Michelle Spohnheimer, Housing & Community Development Director, phone: 641-754-5756, email: mspohnheimer@marshalltown-ia.gov

Owner:
City of Marshalltown
24 North Center Street
Marshalltown, Iowa 50158
Phone: 641-754-5701
www.marshalltown-ia.gov

Architect of Record:
RDG Planning & Design, Inc.
301 Grand Avenue
Des Moines, Iowa 50309
Phone: 515-288-3141
www.rdgusa.com

SECTION 3 LANGUAGE FOR PROCUREMENT DOCUMENTS

(This language is to be included in all procurement documents/ solicitations)

A. The work to be performed under this contract is subject to the requirements of section 3 of the Housing and Urban Development Act of 1968, as amended, 12 U.S.C. 1701u (section 3). The purpose of section 3 is to ensure that employment and other economic opportunities generated by HUD assistance or HUD-assisted projects covered by section 3, shall, to the greatest extent feasible, be directed to low- and very low-income persons, particularly persons who are recipients of HUD assistance for housing.

B. The parties to this contract agree to comply with HUD's regulations in 24 CFR part 135, which implement section 3. As evidenced by their execution of this contract, the parties to this contract certify that they are under no contractual or other impediment that would prevent them from complying with the part 135 regulations.

C. The contractor agrees to send to each labor organization or representative of workers with which the contractor has a collective bargaining agreement or other understanding, if any, a notice advising the labor organization or workers' representative of the contractor's commitments under this section 3 clause, and will post copies of the notice in conspicuous places at the work site where both employees and applicants for training and employment positions can see the notice. The notice shall describe the section 3 preference, shall set forth minimum number and job titles subject to hire, availability of apprenticeship and training positions, the qualifications for each; and the name and location of the person(s) taking applications for each of the positions; and the anticipated date the work shall begin.

D. The contractor agrees to include this section 3 clause in every subcontract subject to compliance with regulations in 24 CFR part 135, and agrees to take appropriate action, as provided in an applicable provision of the subcontract or in this section 3 clause, upon a finding that the subcontractor is in violation of the regulations in 24 CFR part 135. The contractor will not subcontract with any subcontractor where the contractor has notice or knowledge that the subcontractor has been found in violation of the regulations in 24 CFR part 135.

E. The contractor will certify that any vacant employment positions, including training positions, that are filled (1) after the contractor is selected but before the contract is executed, and (2) with persons other than those to whom the regulations of 24 CFR part 135 require employment opportunities to be directed, were not filled to circumvent the contractor's obligations under 24 CFR part 135.

F. Noncompliance with HUD's regulations in 24 CFR part 135 may result in sanctions, termination of this contract for default, and debarment or suspension from future HUD assisted contracts.

G. With respect to work performed in connection with section 3 covered Indian housing assistance, section 7(b) of the Indian Self-Determination and Education Assistance Act (25 U.S.C. 450e) also applies to the work to be performed under this contract. Section 7(b) requires that to the greatest extent feasible (i) preference and opportunities for training and employment shall be given to Indians, and (ii) preference in the award of contracts and subcontracts shall be given to Indian organizations and Indian-owned Economic Enterprises. Parties to this contract that are subject to the provisions of section 3 and section 7(b) agree to comply with section 3 to the maximum extent feasible, but not in derogation of compliance with section 7(b).

Section 3 Businesses are encourage to respond to this proposal. A Section 3 business is a business that is:

51% owned by Section 3 residents*
Whose permanent, full-time staff is comprised of at least 30% Section 3 residents*
Has committed 25% of the dollar amount of its subcontracts to Section 3 businesses

*A Section 3 resident is defined as a public housing resident or someone with a household income that is less than 80% of the area median income. Businesses that believe they meet the Section 3 criteria are encouraged to register as a Section 3 Business through HUD's website:
https://portalapps.hud.gov/Sec3BusReg/BRegistry/RegisterBusiness

Published by the order of the City of Marshalltown, Iowa, on this **__th day of __, 2023**.

SECTION 00 21 13 – INSTRUCTIONS TO BIDDERS

1.1 SUMMARY

A. Definitions:
   1. All definitions set forth in the General Conditions of the Contract for Construction, AIA Document A201, are applicable to these Instructions to Bidders.
   2. Owner is defined as the:

      City of Marshalltown, Iowa

1.2 SITE EXAMINATION

A. Examine the project site before submitting a bid.

B. Each Bidder by submitting a bid represents that he has visited the site to become acquainted with the scope of the work; conditions of site; facilities for delivery, storing, placing and handling of materials and equipment; other work being performed; other work in place; and other obstacles, conditions, or relevant matters concerning the work to be performed.

C. The successful Bidder will not be allowed extra compensation for any matter or thing which the bidder may have informed themselves of prior to submitting a bid

D. The Bidder may contact the Owner at the following to discuss visiting the project site:

   Michelle Spohnheimer
   Director, Housing & Community Development
   City of Marshalltown
   Phone: 641-754-5756
   mspohnheimer@marshalltown-ia.gov

E. The currently occupied premises at the project site are open for examination by bidders only during the following hours:
   1. Monday through Friday: 8:00 AM to 5:00 PM.
   2. Weekends: 8:00 AM to 5:00 PM.

1.3 PREBID CONFERENCE

A. All general contract and major subcontract Bidders and suppliers are invited. Attendance by General Contractors is strongly recommended but not mandatory.

   DATE: **March 9, 2023** TIME: **2:00 PM**

   LOCATION: City Hall
   24 North Center Street
   Marshalltown, IA 50158

1.4 DOCUMENT EXAMINATION

A. Each Bidder by submitting a Bid represents that he has read and understands the Bidding Documents. This responsibility shall not be limited to paragraphs, sections, and drawings listed as pertaining to the trade or contract of a particular bidder. Bidder shall examine the document pertaining to the Work of other subcontracts and trades as his responsibility for certain work may be established therein.

B. Bidding Documents include the Advertisement to Bid, Instructions to Bidders, and the Contract Documents, including any Addenda issued prior to the receipt of bids.

C. Contract Documents are as defined in AIA Document A201 Article 1.

D. Addenda are written or graphic instruments issued prior to the execution of the Contract that modify or interpret the Bidding Documents, including Drawings or Specifications, by additions, deletions, clarifications or corrections. Addenda will become a part of the Contract Documents when the Construction Contract is executed.

1.5 INTERPRETATIONS

A. Should a bidder find discrepancies, ambiguities, or omissions in the documents; should he find work shown but not specified, or specified but not shown; or should he be in doubt as to any meaning, he shall immediately notify the Architect, in writing, at least 10 days before the closing of bids.

B. Failure to request clarifications will not relieve the Contractor of his responsibilities to perform the work in accord with the intent of the documents. The signing of the contract will be considered that the Contractor has a thorough comprehension of the full intent and scope of the specifications and drawings.

C. The Architect will issue any interpretation or correction as an Addendum. Only a written interpretation or correction by Addendum shall be binding. Bidder shall not rely upon any interpretation or correction given by any other method.

D. If conflicting variances occur between the Drawings and Specifications in the Post Bid construction period, then the most stringent shall take precedence.

E. Prior to the receipt of bids, Addenda will be mailed or delivered to each person or firm recorded by the Architect as having received the Bidding Documents and will be available for inspection wherever the Bidding Documents are kept available for that purpose.

1.6 SUBCONTRACTORS

A. The bidder is specifically advised that any person, firm, or other party to whom it is proposed to award a subcontract under this contract:
   1. Must be acceptable to the Owner.
   2. Must comply with the requirements of the Bidding Requirements, Conditions of the Contract and the applicable Technical Specifications and Drawings.

B. Bidder shall identify sub-contractors indicated on the Bid Form.

C. Within the 48 hours following Bid Opening, the apparent low bidder shall submit a list of all subcontractors that will be used for this project. The subcontractor list shall include each firm's name, tax identification number, and address.

1.7 QUALIFICATION OF BIDDER

A. In accordance with Iowa Code 26.9(2) and 26.16, no potential bidder shall be required to provide confidential or proprietary information or meet any class requirements as a precondition to submitting a responsive bid. However, as noted in Iowa Code 26.9(2), the lowest responsive bidder may be required to provide additional information to verify responsibility prior to and as a condition of obtaining final award of the contract. Any qualification requirements contained in any bid document indicates only preferred qualifications, not a precondition to bid, and the lowest responsive bidder's qualifications will be evaluated individually based on all information provided.

B. The Owner may make such investigations as he deems necessary to determine the ability of the bidder to perform the work, and the bidder shall furnish to the Owner all such information and data for this purpose as the Owner may request. If the successful bidder is a non-Iowa corporation, he shall submit proof to the Owner, prior to execution of the Contract, of authorization by the Secretary of State to do business in the State of Iowa. The Owner reserves the right to reject any bid if the evidence fails to satisfy the Owner that the bidder is properly qualified to carry out the obligations of the contract and to complete the work contemplated therein. Conditional bids will not be accepted.

1.8 BID SECURITY

A. Bid Proposal shall be accompanied by a Bid Bond or a cashier's check drawn on a solvent Iowa bank or a bank chartered under the laws of the United States in the amount of 5% of the base bid. Bid security shall be made payable to the Owner. Submit bid security in a sealed envelope, separate from the envelope containing the bid proposal.

B. Form of Bid Bond shall be AIA Document A310-2010, Bid Bond. Bid Bond shall be executed by corporations authorized to contract as surety in the state of Iowa

C. The successful bidder, upon his failure or refusal to execute and deliver the contract and bonds required within 10 days after notice of the acceptance of the bid, shall forfeit to the Owner, as liquidated damages for such failure or refusal, the bid security deposited with the bid proposal.

D. Bid security will be returned promptly after the Owner and the accepted bidder have executed the contract, or, if no award has been made within 30 days after the date of the opening of bids, upon demand by the bidder at any time thereafter, so long as he has not been notified of the acceptance of his bid.

1.9 SECURITY FOR FAITHFUL PERFORMANCE

A. Simultaneously with his delivery of the executed contract, the Contractor shall furnish a Surety Bond or Bonds as security for faithful performance of this contract and for the payment of all persons performing labor on the project under this contract and furnishing materials in connection with this contract, as specified in Article 11 of the General Conditions and Supplementary General Conditions included herein. The surety on such bond or bonds shall be a duly authorized surety company satisfactory to the Owner.

1.10 POWER OF ATTORNEY

A. Attorneys-in-fact who sign Contract Bonds must file with each Bond a certified and effectively dated copy of their Power of Attorney. Attorneys-in-fact must be residents of the state of Iowa for surety companies authorized to do business in the state of Iowa.

1.11 LAWS AND REGULATIONS

A. The bidder's attention is directed to the fact that all applicable State Laws, Municipal Ordinances, and the rules and regulations of all authorities having jurisdiction over construction of the project shall apply to the contract throughout, and they will be deemed to be included in the contract the same as though herein written out in full.

1.12 IOWA SALES TAX EXEMPTION

A. This project is Iowa sales tax exempt. The owner will issue an authorization letter and exemption certificate for the purchase or use of building materials, supplies, and equipment that will be used in the performance of the construction contract. Persons shall purchase such items of tangible personal property without liability for the tax if such property will be used in the performance of the construction contract and a purchasing agent authorization letter and an exemption certificate, issued by the designated exempt entity, are presented to the retailer. Said taxes shall not be included in the bid value for this project.

1.13 DAVIS-BACON ACT AND RELATED ACTS

A. Davis-Bacon and Related Acts: This project is funded, in part, by federal grants and funding. Rules and provisions of the Davis Bacon and Related Acts apply to this project. It is the responsibility of the Contractor to acquire current appropriate and necessary publications and materials regarding the Davis-Bacon and Related Acts and to comply with its rules and provisions as they apply to this Project.

1. All labor performed on site shall be subject to wage restrictions, reporting, posting of notice at the work site, and associated federal penalties for failure to comply with the federal Davis-Bacon and Related Acts.
2. All wages for on-site labor shall be greater than or equal to the minimum wage rates of federal Davis–Bacon and Related Acts as listed for:

   Marshall County, Iowa

   Current wage determination information for the county can be found at www.wdol.gov. Request work classifications and wage rates that do not appear on the wage determination information in writing through the contract administrator.
3. Payrolls for all labor shall be reported on the appropriate forms, shall be certified by employer, and shall be submitted weekly to the contract administrator.
4. Prior to initial pay application provide the contract administrator a list of labor classifications anticipated to be employed and providing on site labor for this project.

1.14 COMMUNITY DEVELOPMENT BLOCK GRANT (CDBG)

A. This project is funded, in part, by a Federal Community Development Block Grant (CDBG) administered through the Iowa Economic Development Authority (IEDA). Rules and regulations of the Federal Community Development Block Grant (CDBG) Program mandate that certain provisions and standards be invoked for development assisted projects.

1. The Contractor shall comply with the provisions and standards as stated in Section 00 73 15 - Special Conditions of the Contract.
2. The Contractor shall comply with the provisions and standards as stated in the Federal Labor Standards Provisions form HUD-4010.

1.15 MINORITY OWNED AND FEMALE OWNED BUSINESS PARTICIPATION

A. Minority Owned and Female Owned Business participation is encouraged. Bidders shall make a good faith documented effort to encourage participation of minority owned and female owned businesses.
   1. Reference Section 00 73 15 - Special Conditions of the Contract.
   2. The Contractor shall submit documentation to Owner's Representative identifying business contacted and contracts issued to minority owned and female owned businesses.

1.16 SUBSTITUTION OF MATERIALS AND PRODUCTS

A. Each bidder represents that his bid is based upon the materials and equipment described in the bidding documents.

B. No substitution will be considered unless written request has been submitted to the Architect for approval at least ten (10) days prior to the date for receipt of bids. Each such request shall include a complete description of the proposed substitute, the name of the material or equipment for which it is to be substituted, drawings, cuts, performance and test data, and any other data or information necessary for a complete evaluation. Refer to Document 00 26 00.

C. If the Architect approves a proposed substitution, such approval will be set forth in an Addendum.

1.17 AVAILABILITY OF SPECIFIED ITEMS

A. Verify prior to bidding that specified items will be available in time for installation during orderly and timely progress of the work.

B. In the event specified items will not be so available, notify the Architect prior to receipt of bids.

1.18 MODIFICATION AND WITHDRAWAL OF BIDS

A. Bidders may withdraw their bids at any time before bid closing. Bidders may modify such bids and resubmit them, or may submit new bids, so long as the requirements for submittal of bids are met.

B. No bid may be withdrawn during the bid holding period stated in the Bid Form.

1.19 PREPARATION OF BID

A. Bid Proposals shall be submitted on the prescribed form with all blank spaces for bid prices filled in, in ink or typewritten, in both words and figures. If in conflict, the amount written in words shall govern. If unit price and extension are in conflict, unit price shall govern. Additional information not requested or any alteration of the Bid Form may disqualify the Bidder.

B. Proposals shall indicate the full name of bidder, including the firm or corporate name of the bidder and shall longhand signature of a principal duly authorized to execute contracts for the bidder. Proposals signed by an agent of the bidder must be accompanied by evidence of the agent's authority to execute contracts for the bidder. The name of each person signing the proposal shall be typed or printed below the signature.

C. Submit Bid Form in opaque, sealed envelope, separate from bid security, bearing on the outside the following:

   BID FOR: **Marshalltown Façade Rehabilitation**

BIDDER: [*insert name of bidder*]

CONTACT: [*insert bidder's point of contact email address*]

D. Submit bid security in a separate envelope attached to the envelope containing the bid proposal.

E. If submitting by mail or delivery service, enclose the above contents in another envelope. The mailing envelope shall bear the return address of the bidder. Address the mailing envelope with:

Sealed Bid Enclosed:

Façade Rehabilitation

City of Marshalltown

Attn: City Clerk

City Hall

24 North Center Street

Marshalltown, IA 50158

F. Oral, telephonic, telegraphic, facsimile or other electronically transmitted bids will not be considered

1.20 RECEIPT AND OPENING OF BIDS

A. Sealed bids will be received by the Owner until the time shown below, on the date shown below and will be publicly opened and read aloud at the location shown below.

BID DATE DUE: **March 21, 2023** TIME DUE: **2:00 PM (local time)**

LOCATION: City Hall
24 North Center Street
Marshalltown, IA 50158

BID OPENING: **March 21, 2023** TIME OPENING: **2:05 PM (local time)**

LOCATION: City Hall
Council Chambers
24 North Center Street
Marshalltown, IA 50158

Bids will be received for a Single General Construction Contract – Stipulated Sum.

B. Any bid may be withdrawn prior to the above scheduled time for the opening of bids or authorized postponement thereof. Any bid received after the time and date specified shall not be considered. No bidder may withdraw a bid within 30 days after the actual date of the opening thereof.

1.21 BID BREAKDOWN

A. Within 48 hours of bid opening, the apparent low bidder shall provide, either as a separate breakout schedule or incorporated directly into the Schedule of Values, a detailed valuation of each individual business address listed below, in order to establish grant match amounts for each property Owner. (The total of the costs shall equal the lump-sum bid amount):

1 West Main Street	18 North Center Street
13-15 South Center Street	21 West Main Street
14 North Center Street	23 West Main Street
14 West Main Street	25 West Main Street
16 North Center Street	

B. Within 48 hours of bid opening, the apparent low bidder shall provide, either as a separate breakout schedule or incorporated directly into the Schedule of Values, a detailed valuation of each Alternate for each individual business address listed above, in order to establish grant match amounts for each property Owner. (The total of the costs shall equal the lump-sum Alternate bid amount).

As Shown in Section 01 23 00 – Alternates.

C. The detailed valuation for the above bid(s) shall include a description of the Work for each building, listed individually and formatted into line items using UniFormat™, MasterFormat™, or other widely used and acceptable industry classification standard. The detailed valuation shall indicate, at a minimum: costs for General Conditions and other expenses, and costs for major components or trades, including Demolition, Concrete, Masonry, Metals, Carpentry, Doors and Windows, Painting, Signage, Awnings, and other specialties appropriate for the Work at each building. Simply providing a lump sum cost per building will be insufficient.

D. The bid breakdown may be used to establish the Schedule of Values as required by the General Conditions, and used for the Application and Certification for Payment.

1.22 REJECTION OF BIDS

A. To the extent permitted by law, the Owner reserves the right to waive minor irregularities and to reject any and all bids. In addition, the Owner reserves the right to reject a bid if the bidder has failed to furnish any required bid security, or to submit data required by the bidding documents, or if the bid is in any way incomplete or irregular.

B. The Owner reserves the right to reject any bid if the qualifications of the bidder fail to satisfy the Owner that the bidder is properly qualified to carry out the obligations of the contract and to complete the work contemplated therein.

C. The Owner also reserves the right to negotiate modifications to Unit Prices for additions to, or deductions from, the scheduled amount of work as given in the bid if they are considered excessive or unreasonable.

1.23 AWARD OF CONTRACT

A. The Contract will be awarded on the basis of the apparent low base bid and the selection of any or all alternatives. Unit prices will not be considered in the determination of the award of Contract.

1.24 TIME OF COMPLETION

A. Schedule the Work to achieve Substantial Completion as follows:
   1. The Work of the Project shall be Substantial Complete on or before: **June 30, 2024.**
   2. It is agreed that the contract time is of prime importance and of the essence of this contract and failure to complete the Work on schedule will cause the Owner to sustain substantial damages.
   3. No liquidated damages will be assessed, but the Contractor is required to cooperate fully in meeting this date.

END OF SECTION 00 21 13

SECTION 00 26 00 – PROCUREMENT SUBSTITUTION PROCEDURES

1.1 SUMMARY

A. Pre-Bid Substitutions.

1.2 BIDDER'S OPTIONS

A. For products specified by reference standard only, select product meeting that standard, by any manufacturer.

B. For products specified by naming one or several products or manufacturers, select one of the products and manufacturers named which complies with the technical Specifications. Submit a Request for Substitution for a product or manufacturer which is not specifically named unless "No Substitutions" is indicated. Architect and/or Engineer will review and consider for approval.

C. For products specified by naming one or several products or manufacturers and stating "or equivalent", or "equal", or "Architect approved equivalent", or similar wording, submit a Request for Substitution for a product or manufacturer which is not specifically named. Architect and/or Engineer will review and consider for approval.

D. For products specified by naming only one or several products or manufacturers, and "No Substitutions" is indicated, there is no option and no substitution will be allowed.

1.3 SUBSTITUTIONS

A. Prepare Base Bid in accordance with requirements of the Bidding Documents.
   1. Substitutions for products may be made during the bidding period by submitting completed a Request for Substitution form and providing substantiating product information. The Request for Substitution form must be received by the Architect a minimum of ten (10) calendar days prior to the Bid Date.
   2. The Architect will consider substitution requests for approval provided they meet the submittal requirements and product information is complete and accurate.
   3. Architect will notify Bidders of approved product substitutions in an addendum.

B. Submit a separate request for each item. Provide the following with each request:
   1. Complete data substantiating compliance of proposed substitution with requirements stated in Bidding Documents:
      a. Product identification, including manufacturer's name and address.
      b. Manufacturer's literature, identifying:
         1) Product description and model number.
         2) Reference standards.
         3) Performance and test data.
      c. Samples, as applicable.
      d. Name and address of projects on which product has been used and date of each installation.
   2. Itemized comparison of the proposed substitution with product specified, listing significant variations.
   3. Advise of any change in construction schedule resulting from use of proposed substitution.
   4. All effects of substitution on separate contracts.
   5. List of changes required in other work or products.
   6. Designation of responsibility for cost of required license fees or royalties.

7. Description of availability of maintenance services and sources of replacement materials and parts.

C. Substitutions will not be considered for acceptance when:
   1. Acceptance will require substantial revision of Contract Documents.
   2. In the judgement of the Architect, the submittal does not include adequate information for a comprehensive evaluation.

1.4 BIDDER'S REPRESENTATION

A. In making formal request for substitution the bidder represents that:
   1. The bidder has investigated proposed product and has determined that it is equivalent to or superior in all respects to that specified.
   2. The bidder will provide the same warranties or bonds for substitution as for the product specified.
   3. The bidder will coordinate installation of the accepted substitution into the Work and will make such changes as may be required for the Work to be completed in all respects.
   4. The bidder waives claims for additional costs caused by substitution that may subsequently become apparent.

1.5 ARCHITECT'S ACTION

A. Review requests for substitution. Substitution requests that are either approved or not approved will not be returned to person submitting request.

B. Issue an addendum to identify accepted substitutions.

C. Only those substitutions noted as approved in an addendum may be included in the Bid.

1.6 SUBSTITUTION REQUEST FORM

A. A Request for Substitution form is included at the end of this Section.

B. Substitutions will be considered only when the Request for Substitution form is completed and submitted with product information requested.

REQUEST FOR SUBSTITUTION

TO: RDG Planning & Design
301 Grand Avenue
Des Moines, IA 50309-1718
sfenton@rdgusa.com

DATE RECEIVED: _____

We submit the following product/system/material information for your consideration and approval:

SPECIFICATION SECTION NUMBER AND NAME: _____

SPECIFIED ITEM: _____

PROPOSED SUBSTITUTION: _____

_____

Attach complete information on changes to Drawings and/or Specifications, which proposed substitution would require for its proper installation.

Submit with request necessary samples and substantiating data to show equivalency (quality and performance) to that specified. Clearly mark manufacturer's literature to identify proposed item and to identify criteria confirming product is equivalent to the specification.

The undersigned certifies that the function, appearance, quality, performance and compatibility with adjacent materials are equivalent to the specified item.

Submitted by:

_____
(Signature) (Phone)

_____
(Firm) (Fax)

_____
(Address) (Email)

ARCHITECT ACTION:

☐ RECOMMENDED ☐ NOT RECOMMENDED ☐ RECOMMENDED AS NOTED
☐ RECEIVED LATE ☐ INSUFFICIENT DATA RECEIVED

By: Date:

ENGINEER OR CONSULTANT ACTION:

☐ RECOMMENDED ☐ NOT RECOMMENDED ☐ RECOMMENDED AS NOTED
☐ RECEIVED LATE ☐ INSUFFICIENT DATA RECEIVED

By: Date:

OWNER ACTION:

☐ RECOMMENDED ☐ NOT RECOMMENDED ☐ RECOMMENDED AS NOTED

☐ RECEIVED LATE ☐ INSUFFICIENT DATA RECEIVED

By: Date:

FILL IN BLANKS BELOW:

A. Does the substitution affect dimensions indicated on the Drawings?

☐ Yes ☐ No If yes, describe the changes:

B. Will the undersigned pay for changes to the building design, including engineering and detailing costs caused by the requested substitution?

☐ Yes ☐ No If no, fully explain:

C. What effect does substitution have on other Contracts or other trades?

D. What effect does substitution have on construction schedule?

E. Manufacturer's warranties of the proposed and specified items are:

☐ Same ☐ Different If different, fully explain:

F. Reason for Request for Substitution:

G. Comparison of specified item with the proposed substitution; list significant variations:

H. What maintenance services are provided and who will provide:

I. Estimated cost savings or additional cost to make substitution:

(Attach additional sheets as required)

END OF SECTION 00 26 00

LIMITED ASBESTOS CONTAINING MATERIALS INSPECTION

Commercial Property
1 West Main Street
Marshalltown, Iowa

Prepared for:

City of Marshalltown
36 N Center Street
Marshalltown, Iowa 50158

Prepared by:

IMPACT7G

8951 Windsor Parkway
Johnston, Iowa 50131

May 24, 2022

LIMITED ASBESTOS CONTAINING MATERIALS INSPECTION

Commercial Property
1 West Main Street
Marshalltown, Iowa

Inspected and Prepared by:

Aaron Heuss
Environmental Specialist I
Iowa Certified Asbestos Inspector: 22-8210I

Prepared and Reviewed by:

Kim Crosser - Harms
Sr. Project Manager
Iowa Certified Asbestos Inspector: 22-8148I

TABLE OF CONTENTS

1.0 EXECUTIVE SUMMARY 1
2.0 INTRODUCTION 2
3.0 PROPERTY DESCRIPTION 3
4.0 INSPECTION LIMITATIONS 3
5.0 INSPECTION ACTIVITIES 3
6.0 CONCLUSIONS / RECOMMENDATIONS 6
7.0 CONDITIONS & LIMITATIONS 6

LIST OF TABLES

Table 1 – Asbestos Containing Material Sample List
Table 2 – Non-Asbestos Containing Material Sample List

APPENDICES

APPENDIX A - Qualifications
APPENDIX B - Laboratory Reports & Chain of Custody Documentation
APPENDIX C - Photographs

1.0 EXECUTIVE SUMMARY

Impact7G, Inc. (Impact7G), completed a Limited Asbestos Containing Materials (ACM) Inspection on May 19, 2022 of the façade of the building located at 1 West Main Street, Marshalltown, Iowa (Property). The purpose of this Limited ACM Inspection is to document the presence of asbestos containing materials and assist the City of Marshalltown (Client) in facilitating renovation activities of the facade.

Asbestos was detected in two (2) of the nine (9) samples collected from various building components within the Property's facade. See Table 1 for additional information. ACMs include:

- Caulking(s)

All building materials similar in appearance, color, and/or texture to those determined to contain asbestos must be assumed to contain asbestos throughout this building.

Based on these results, the Property's façade requires further action prior to any renovation activities.

2.0 INTRODUCTION

A. Property Information

Location:

Commercial Property
1 West Main Street
Marshalltown, Iowa 50158

Contact Person:

City of Marshalltown
Deb Millizer
36 N Center Street
Marshalltown, Iowa 50158

B. Personnel

Sr. Project Manager: Kim Crosser-Harms	State of Iowa License	22-8148I
Inspector: Aaron Heuss	State of Iowa License	22-8210I

C. Sampling Plan

According to the Client, the scope of this Limited ACM Inspection includes the façade of the building.

This Limited ACM Inspection is in accordance with OSHA Regulation 1926.1101. All samples collected in the field were sent to EMSL, an NVLAP certified laboratory for analysis. The samples were analyzed via the polarized light microscopy (PLM) method for asbestos content. If requested by Client, samples were further analyzed via the transmission electron microscopy (TEM) method or PLM 400 Point Count analysis method.

D. Regulation Review

The U.S. EPA qualifies asbestos containing materials (ACM) as materials with an asbestos content greater than 1%. According to Iowa OSHA, ACM is any material found to contain asbestos, regardless of its concentration, and shall be regulated as hazardous waste. The following definitions are taken from Section 61.141 of Subpart M, Part 61 of Title 40: Protection of Environment of the Code of Federal Regulations (CFR).

- "Category I nonfriable asbestos-containing material (ACM)" is defined as asbestos-containing packings, gaskets, resilient floor covering, and asphalt roofing products containing more than 1% asbestos as determined using the method specified in appendix E, subpart E, 40 CFR part 763, section 1, Polarized Light Microscopy (PLM).
- "Category II nonfriable ACM" is defined as any material, excluding Category I nonfriable ACM, containing more than 1% asbestos as determined using the methods specified in appendix E, subpart E, 40 CFR part 763, section 1, PLM that, when dry, ***cannot*** be crumbled, pulverized, or reduced to powder by hand pressure.
- "Friable asbestos material" is defined as any material containing more than 1% asbestos as determined using the methods specified in appendix E, subpart E, 40 CFR part 763, section 1, PLM that when dry, ***can*** be crumbled, pulverized, or

reduced to powder by hand pressure. If the asbestos content is less than 10% as determined by a method other than point counting by PLM, verify the asbestos content by point counting using PLM.

3.0 PROPERTY DESCRIPTION

The Property consists of a two-story brick building that is a Staging 2 Sell It shop.

4.0 INSPECTION LIMITATIONS

An Inspection limitation, for the purpose of this report, is any action or task that is limited from the original scope work. The overall reason for any limitation is the protection of Impact7G personnel. Examples of limitations can range from a lack of accessibility to an area of the Property, unsafe work areas, collecting additional samples, etc.

- **Only the façade of the building was inspected.**

5.0 INSPECTION ACTIVITIES

Iowa certified asbestos inspectors from Impact7G collected 9 samples on May 19, 2022. The samples were collected from various accessible building components located throughout the façade. Upon completion of bulk sampling activities, samples were sent to EMSL, an NVLAP certified laboratory for analysis.

Materials that are “suspected” to contain asbestos are divided into the following three categories:

1. **Surfacing materials** are materials that are sprayed or troweled on for acoustical, decorative, or fireproofing purposes. Examples are textured ceilings or drywall, exterior stucco and structural steel fireproofing;

2. **Thermal System Insulation (TSI)** is insulation used to inhibit heat transfer from pipes, boilers, tanks, ducts, and various other components of hot and cold-water systems and HVAC systems. Examples are hard cementitious “mud” type insulation on pipe elbows and tees, pipe insulation runs and risers, boiler insulation, flues; and,

3. **Miscellaneous** materials are mostly non-friable products when maintained in good condition. Examples are resilient floor coverings including vinyl, linoleum and floor tile, mastics and adhesives, cement products, caulk, drywall, ceiling tile and roofing materials.

The following tables show samples positively identified by the laboratory to be asbestos containing materials (ACM) and samples that were analyzed as non-ACM. The complete analytical results can be found in Appendix B.

Table 1 – Non-Asbestos Containing Material Sample List

Sample #	Material Substance	Material Type (Surf/TSI/Misc)	Friable (Y or N)	Color	Floor	Location	Asbestos Content	Estimated Quantities
1WM-01	Caulking	Misc	N	Gray/White	Ext	Window Joints	<1% Chrysotile	25 LF
1WM-05	Caulking	Misc	N	Tan/White	Ext	Door to Upstairs	<1% Chrysotile	40 LF

Material Type – Surf=Surfacing, TSI=Thermal System Insulation, Misc=Miscellaneous / **Asbestos Content** – ND=None Detected
B=Basement, R=Roof, Int=Interior, Ext=Exterior

Zero (0) bulk material samples were analyzed greater than 1% asbestos. Two (2) of the remaining building material samples were detected with a concentration of <1% asbestos. ACMs include caulking(s). If during demolition or renovation activities additional areas of identified ACM are discovered, they should be abated accordingly. Laboratory analytical reports are provided in Appendix B.

Iowa OSHA would consider disturbance of these two (2) materials as unclassified asbestos work.

Though an asbestos abatement contractor is not required to remove materials containing 1% or less asbestos, these materials must be removed wet and promptly contained and disposed of in leak-tight containers. Materials containing 1% or less asbestos are not required to be disposed of at an approved landfill as asbestos waste material.

Employers of those engaging in the disturbance of 1% or less asbestos are required to provide their workers with Asbestos Awareness training of at least two hours prior to disturbance of said materials. Further, those removing materials containing 1% or less asbestos must maintain documentation proving that breathing zone exposures do not exceed either OSHA's permissible exposure limit or short-term excursion limit.

It is important to note that these are estimated quantities; therefore, the abatement contractors and the client representative should discern between the estimated quantity above and future exploration of the property at the pre-bid walk-through to determine the final quantity during abatement procedures.

Table 2 – Non-Asbestos Containing Material Sample List

Sample #	Material Substance	Material Type (Surf/TSI/Misc)	Friable (Y or N)	Color	Floor	Location	Asbestos Content
1WM-02	Caulking	Misc	N	Gray	Ext	Around Windows	ND
1WM-03	Adhesive	Misc	N	Yellow	Ext	Outside Entry	ND
1WM-04 – Finish Coat	Plaster	Misc	Y	White	Ext	Soffit	ND
1WM-04 – Base Coat	Plaster	Misc	Y	Gray	Ext	Soffit	ND
1WM-06	Caulking	Misc	N	Gray	1	Around Interior windows	ND
1WM-07	Expansion Joint	Misc	N	Black	Ext	Sidewalk Meets Brick	ND
1WM-08	Window Glaze	Misc	N	Gray/White	2	Upstairs Windows	ND

Material Type – Surf=Surfacing, TSI=Thermal System Insulation, Misc=Miscellaneous / **Asbestos Content** – ND=None Detected
B=Basement, R=Roof, Int=Interior, Ext=Exterior

6.0 CONCLUSIONS / RECOMMENDATIONS

The following conclusions and recommendations are summarized as follows:

- Asbestos was detected in two (2) of the bulk material samples collected from the façade of the building located at 1 West Main Street, Marshalltown, Iowa. ACM's include caulking(s). Based on the results of the data collected during the assessment, the façade of the building requires further action prior to renovation.

Impact7G recommends the abatement of all ACM containing components located within the inspection area if those building materials are to be disturbed during any future renovation/demolition activities. All abatement work shall be completed in accordance with local, state, and federal regulations. A visual inspection is recommended upon completion of abatement work to document that all ACMs within the scope of abatement have been removed.

7.0 CONDITIONS & LIMITATIONS

The Iowa Department of Natural Resources' (IDNR) Air Quality Bureau and Occupational Safety and Health Bureau (OSHA) of the Iowa Division of Labor Services require notification of any renovation/demolition activities in non-residential projects if the combined regulated ACM meets or exceeds any of the following thresholds: 160 square feet of surfacing ACM, 260 linear feet of TSI, or 35 cubic feet of ACM debris.

Impact7G has performed the tasks contained within this report in a thorough and professional manner consistent with commonly accepted standard industry practices. The results, findings, conclusions and recommendations expressed in this report are based on conditions observed during our survey of the property. Impact7G cannot guarantee, and does not warrant, that this report has identified all adverse environmental factors and/or conditions affecting the subject property. This report is not a bidding document or project specification as it does not contain the necessary components. Impact7G cannot warrant the work of any third party that may have aided in the completion of this report. This report has been prepared on behalf of and exclusively for use by the City of Marshalltown for specific application to their project as discussed. Contractors, consultants or other third parties reviewing this report must draw their own conclusions regarding data contained within the report, further investigation or required remediation.

APPENDIX A

Qualifications

AARON HEUSS

DOB: 06-25-1982

Issued: 04-19-2022

This person is licensed to perform asbestos work in the State of Iowa. ID card is intended for official use only and must be present on jobsite.

License Type	Number	Expires
INSPECTOR	22-8210	02-22-2023
SUPERVISOR	22-8211	02-23-2023

DIVISION OF IOWA LABOR

Asbestos

Rod A. Roberts

Rod A. Roberts
Labor Commissioner

APPENDIX B

Laboratory Reports &
Chain of Custody Documentation

EMSL Analytical, Inc.
6340 CastlePlace Dr. Indianapolis, IN 46250
Tel/Fax: (317) 803-2997 / (317) 803-3047
http://www.EMSL.com / indianapolislab@emsl.com

EMSL Order: 162211256
Customer ID: IMPA25
Customer PO:
Project ID:

Attention: Kim Crosser
Impact7G
8951 Windsor Parkway
Johnston, IA 50131

Phone: (515) 460-1124
Fax: (515) 528-8005
Received Date: 05/23/2022 9:20 AM
Analysis Date: 05/24/2022
Collected Date:

Project: CITY OF MARSHALLTOWN-1 WEST MAIN

Test Report: Asbestos Analysis of Bulk Materials via EPA 600/R-93/116 Method using Polarized Light Microscopy

			Non-Asbestos		Asbestos
Sample	**Description**	**Appearance**	**% Fibrous**	**% Non-Fibrous**	**% Type**
1-01 *162211256-0001*	CAULKING, WHITE, EXT, WINDOW JOINTS	Gray/White Non-Fibrous Homogeneous		100.0% Non-fibrous (Other)	**<1% Chrysotile**
1-02 *162211256-0002*	CAULKING, GRAY, EXT, AROUND WINDOWS	Gray Non-Fibrous Homogeneous		100.0% Non-fibrous (Other)	**None Detected**
1-03 *162211256-0003*	ADHESIVE, YELLOW, EXT, ON OUTSIDE ENTRY	Yellow Non-Fibrous Homogeneous		100.0% Non-fibrous (Other)	**None Detected**
1-04-Finish Coat *162211256-0004*	PLASTER, WHITE, EXT, SOFFIT	White Non-Fibrous Homogeneous		100.0% Non-fibrous (Other)	**None Detected**
1-04-Base Coat *162211256-0004A*	PLASTER, WHITE, EXT, SOFFIT	Gray Non-Fibrous Homogeneous		20% Quartz 80.0% Non-fibrous (Other)	**None Detected**
1-05 *162211256-0005*	CAULKING, WHITE, EXT, DOOR TO UPSTAIRS	Tan/White Non-Fibrous Homogeneous		100.0% Non-fibrous (Other)	**<1% Chrysotile**
1-06 *162211256-0006*	CAULKING, GRAY, EXT, AROUND INTERIOR WINDOWS	Gray Non-Fibrous Homogeneous		100.0% Non-fibrous (Other)	**None Detected**
1-07 *162211256-0007*	EXPANSION JOINT, BLACK, EXT, SIDEWALK MEETS BRICK	Black Non-Fibrous Homogeneous		100.0% Non-fibrous (Other)	**None Detected**
1-08 *162211256-0008*	WINDOW GLAZE, WHITE, 2, UPSTAIRS WINDOW	Gray/White Non-Fibrous Homogeneous		100.0% Non-fibrous (Other)	**None Detected**

EMSL maintains liability limited to cost of analysis. Interpretation and use of test results are the responsibility of the client. This report relates only to the samples reported above, and may not be reproduced, except in full, without written approval by EMSL. EMSL bears no responsibility for sample collection activities or analytical method limitations. The report reflects the samples as received. Results are generated from the field sampling data (sampling volumes and areas, locations, etc.) provided by the client on the Chain of Custody. Samples are within quality control criteria and met method specifications unless otherwise noted. The above analyses were performed in general compliance with Appendix E to Subpart E of 40 CFR (previously EPA 600/M4-82-020 "Interim Method") but augmented with procedures outlined in the 1993 ("final") version of the method. This report must not be used by the client to claim product certification, approval, or endorsement by NVLAP, NIST or any agency of the federal government. Non-friable organically bound materials present a problem matrix and therefore EMSL recommends gravimetric reduction prior to analysis. Unless requested by the client, building materials manufactured with multiple layers (i.e. linoleum, wallboard, etc.) are reported as a single sample. Estimation of uncertainty is available on request.

Samples analyzed by EMSL Analytical, Inc. Indianapolis, IN NVLAP Lab Code 200188-0, AZ0939, CA 2575, CO AL-15132, TX 300262

EMSL Analytical, Inc.
6340 CastlePlace Dr. Indianapolis, IN 46250
Tel/Fax: (317) 803-2997 / (317) 803-3047
http://www.EMSL.com / indianapolislab@emsl.com

EMSL Order: 162211256
Customer ID: IMPA25
Customer PO:
Project ID:

Attention: Kim Crosser
Impact7G
8951 Windsor Parkway
Johnston, IA 50131

Project: CITY OF MARSHALLTOWN-1 WEST MAIN

Phone: (515) 460-1124
Fax: (515) 528-8005
Received Date: 05/23/2022 9:20 AM
Analysis Date: 05/24/2022
Collected Date:

The samples in this report were submitted to EMSL for analysis by Asbestos Analysis of Bulk materials via EPA/600 (0513) Method using Polarized Light Microscopy. The reference number for these samples is the EMSL Order ID above. Please use this reference number when calling about these samples.

Report Comments:

Sample Receipt Date:	05/23/2022	Sample Receipt Time:	9:20 AM
Analysis Completed Date:	05/24/2022	Analysis Completed Time:	10:13 AM

Analyst(s):

Maggie Hayden PLM (9)

Samples Reviewed and approved by:

Asbestos Laboratory Manager
or other approved signatory

EMSL maintains liability limited to cost of analysis. Interpretation and use of test results are the responsibility of the client. This report relates only to the samples reported above, and may not be reproduced, except in full, without written approval by EMSL. EMSL bears no responsibility for sample collection activities or analytical method limitations. The report reflects the samples as received. Results are generated from the field sampling data (sampling volumes and areas, locations, etc.) provided by the client on the Chain of Custody. Samples are within quality control criteria and met method specifications unless otherwise noted. The above analyses were performed in general compliance with Appendix E to Subpart E of 40 CFR (previously EPA 600/M4-82-020 "Interim Method") but augmented with procedures outlined in the 1993 ("final") version of the method. This report must not be used by the client to claim product certification, approval, or endorsement by NVLAP, NIST or any agency of the federal government. Non-friable organically bound materials present a problem matrix and therefore EMSL recommends gravimetric reduction prior to analysis. Unless requested by the client, building materials manufactured with multiple layers (i.e. linoleum, wallboard, etc.) are reported as a single sample. Estimation of uncertainty is available on request.

Samples analyzed by EMSL Analytical, Inc. Indianapolis, IN NVLAP Lab Code 200188-0, AZ0939, CA 2575, CO AL-15132, TX 300262

OrderID: 162211256

Asbestos Bulk Building Material

Chain of Custody

EMSL Order Number (Lab Use Only)

EMSL ANALYTICAL, INC.
LABORATORY•PRODUCTS•TRAINING

162211256

EMSL Analytical, Inc.
6340 Castleplace Dr.
Indianapolis, IN 46250
Phone: (317)803-2997
Fax: (317)803-3047

Company: IMPACT7G		**EMSL – Bill to:** Same *Third Party Billing requires written authorization from third party.*	
Street: 8951 Windsor Parkway			
City: Johnston	**State:** IA	**Zip Code:** 50131	**Country:** USA
Report To: Kim Crosser		**Phone:** 515-460-1124	**Fax:** 515-685-2236
Email Address: kcrosser@Impact7G.com		**Please Provide results:** EMAIL	
Project Name: CITY OF MARSHALLTOWN-1 West Main			
US State Samples Taken: IA			

Turnaround Time (TAT) Options

☐ 3-Hour ☐ 6-Hour ☒ 24-Hour ☐ 32-Hour ☐ 48 -Hour ☐ 96-Hour ☐ 1 Week ☐ 2 Week

**For TEM Air 3 hr through 6 hr, please call ahead to schedule. *There is a premium charge for 3 hr TEM AHERA or EPA Level II TAT. You will be asked to sign an authorization form for this service. Analysis completed in accordance with EMSL's Terms and Conditions located in the Analytic Price Guide.*

PLM – BULK (reporting limit) ☒ PLM EPA 600/R-93/116 (<1%)	**TEM – Air** ☐ 4-4.5hr TAT (AHERA only) ☐ AHERA 40 CFR, Part 763
☐ **Check for Positive Stop – Clearly Identify Homogeneous Group**	**Filter Pore Size (Air Samples):** ☐ 0.8 µm ☐ 0.45 µm
Sampler's Name:	**Sampler's Signature:**

Sample #	Sample Description	Volume/Area (Air)	Date/Time Sampled
1-01	Caulking, White, Ext, Window Joints		
1-02	Caulking, Gray, Ext, Around Windows		
1-03	Adhesive, Yellow, Ext, on Outside Entry		
1-04	Plaster, White, Ext, Soffit		
1-05	Caulking, White, Ext, Door to Upstairs		
1-06	Caulking, Gray, Ext, Around Interior Windows		
1-07	Expansion Joint, Black, Ext, Sidewalk Meets Brick		
1-08	Window Glaze, White, 2, Upstairs Window		

Client Sample # (s):	1-01 – 1-08			**Total # of Samples:**	8
Relinquished (Client):	Aaron Heuss	**Date:**	5/19/22	**Time:**	
Received (Lab):		**Date:**	5/23/22	**Time:**	920
Comments/Special Instructions:	**PLEASE SAMPLE ALL LAYERS, ADHESIVES, TEXTURES, ETC. Thanks! ☺**				

APPENDIX C

Photographs

Photograph table includes photos of all asbestos-containing materials.

5/19/22 **Photographer:** **Aaron Heuss**	**Asbestos Containing Materials Inspection** **1 West Main Street** **Marshalltown, Iowa**
Photo #1 **Description:** ACM Gray/White Caulking **Location:** Exterior, Window Joints **Sample** 1WM-01	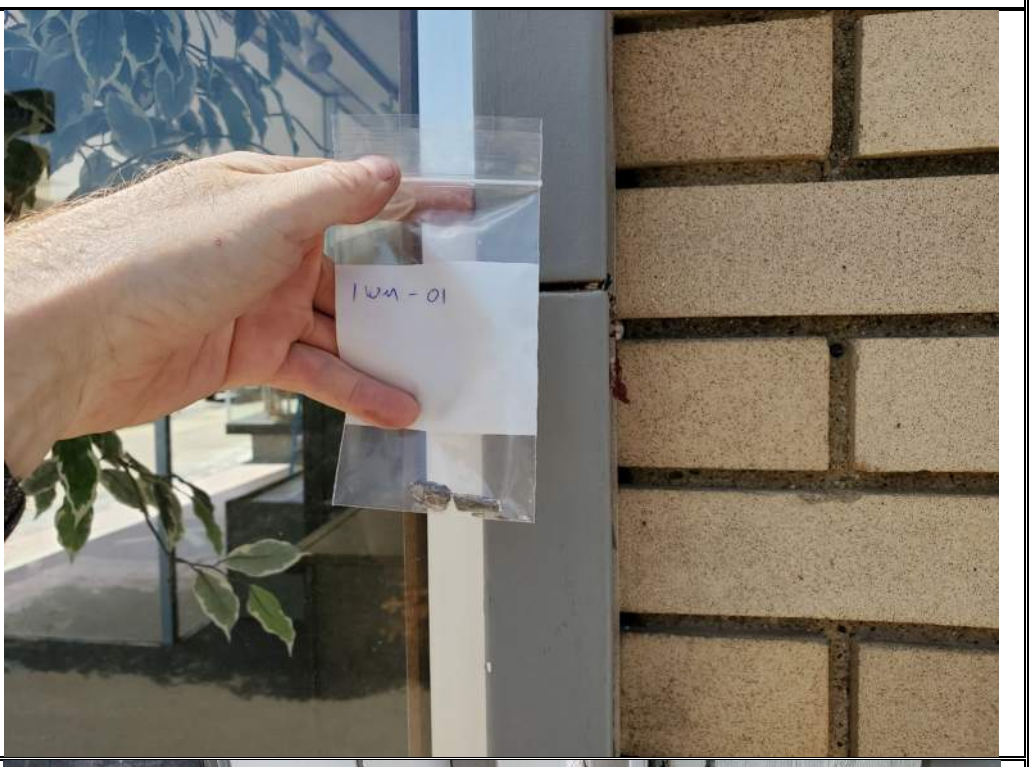
Photo #2 **Description:** ACM Tan/White Caulking **Location:** Exterior, Doors to Upstairs **Sample** 1WM-05	

LIMITED ASBESTOS CONTAINING MATERIALS INSPECTION

Commercial Property
13 15 South Center Street
Marshalltown, Iowa

Prepared for:

City of Marshalltown
36 N Center Street
Marshalltown, Iowa 50158

Prepared by:

8951 Windsor Parkway
Johnston, Iowa 50131

May 24, 2022

LIMITED ASBESTOS CONTAINING MATERIALS INSPECTION

Commercial Property
13 15 South Center Street
Marshalltown, Iowa

Inspected and Prepared by:

Aaron Heuss
Environmental Specialist I
Iowa Certified Asbestos Inspector: 22-8210I

Prepared and Reviewed by:

Kim Crosser - Harms
Sr. Project Manager
Iowa Certified Asbestos Inspector: 22-8148I

TABLE OF CONTENTS

1.0 EXECUTIVE SUMMARY 1
2.0 INTRODUCTION 2
3.0 PROPERTY DESCRIPTION 3
4.0 INSPECTION LIMITATIONS 3
5.0 INSPECTION ACTIVITIES 3
6.0 CONCLUSIONS / RECOMMENDATIONS 5
7.0 CONDITIONS & LIMITATIONS 5

LIST OF TABLES

Table 1 – Non-Asbestos Containing Material Sample List

APPENDICES

APPENDIX A - Qualifications
APPENDIX B - Laboratory Reports & Chain of Custody Documentation

1.0 EXECUTIVE SUMMARY

Impact7G, Inc. (Impact7G), completed a Limited Asbestos Containing Materials (ACM) Inspection on May 19, 2022 of the façade of the building located at 13 15 South Center Street, Marshalltown, Iowa (Property). The purpose of this Limited ACM Inspection is to document the presence of asbestos containing materials and assist the City of Marshalltown (Client) in facilitating renovation activities of the facade.

Asbestos was not detected in any of the ten (10) samples collected from various building components within the Property's façade. See Table 1 for additional information.

Based on these results, the Property's façade does not require any further action prior to any renovation activities.

2.0 INTRODUCTION

A. Property Information

Location:

Commercial Property
13 15 South Center Street
Marshalltown, Iowa 50158

Contact Person:

City of Marshalltown
Deb Millizer
36 N Center Street
Marshalltown, Iowa 50158

B. Personnel

Sr. Project Manager: Kim Crosser-Harms	State of Iowa License	22-8148I
Inspector: Aaron Heuss	State of Iowa License	22-8210I

C. Sampling Plan

According to the Client, the scope of this Limited ACM Inspection includes the façade of the building.

This Limited ACM Inspection is in accordance with OSHA Regulation 1926.1101. All samples collected in the field were sent to EMSL, an NVLAP certified laboratory for analysis. The samples were analyzed via the polarized light microscopy (PLM) method for asbestos content. If requested by Client, samples were further analyzed via the transmission electron microscopy (TEM) method or PLM 400 Point Count analysis method.

D. Regulation Review

The U.S. EPA qualifies asbestos containing materials (ACM) as materials with an asbestos content greater than 1%. According to Iowa OSHA, ACM is any material found to contain asbestos, regardless of its concentration, and shall be regulated as hazardous waste. The following definitions are taken from Section 61.141 of Subpart M, Part 61 of Title 40: Protection of Environment of the Code of Federal Regulations (CFR).

- "Category I nonfriable asbestos-containing material (ACM)" is defined as asbestos-containing packings, gaskets, resilient floor covering, and asphalt roofing products containing more than 1% asbestos as determined using the method specified in appendix E, subpart E, 40 CFR part 763, section 1, Polarized Light Microscopy (PLM).
- "Category II nonfriable ACM" is defined as any material, excluding Category I nonfriable ACM, containing more than 1% asbestos as determined using the methods specified in appendix E, subpart E, 40 CFR part 763, section 1, PLM that, when dry, ***cannot*** be crumbled, pulverized, or reduced to powder by hand pressure.
- "Friable asbestos material" is defined as any material containing more than 1% asbestos as determined using the methods specified in appendix E, subpart E, 40 CFR part 763, section 1, PLM that when dry, ***can*** be crumbled, pulverized, or

reduced to powder by hand pressure. If the asbestos content is less than 10% as determined by a method other than point counting by PLM, verify the asbestos content by point counting using PLM.

3.0 PROPERTY DESCRIPTION

The Property consists of a two-story 5,925 SF brick building constructed in 1880. The first floor is occupied by Pentz Appliances.

4.0 INSPECTION LIMITATIONS

An Inspection limitation, for the purpose of this report, is any action or task that is limited from the original scope work. The overall reason for any limitation is the protection of Impact7G personnel. Examples of limitations can range from a lack of accessibility to an area of the Property, unsafe work areas, collecting additional samples, etc.

- **Only the façade of the building was inspected.**

5.0 INSPECTION ACTIVITIES

Iowa certified asbestos inspectors from Impact7G collected 10 samples on May 19, 2022. The samples were collected from various accessible building components located throughout the façade. Upon completion of bulk sampling activities, samples were sent to EMSL, an NVLAP certified laboratory for analysis.

Materials that are “suspected” to contain asbestos are divided into the following three categories:

1. **Surfacing materials** are materials that are sprayed or troweled on for acoustical, decorative, or fireproofing purposes. Examples are textured ceilings or drywall, exterior stucco and structural steel fireproofing;

2. **Thermal System Insulation (TSI)** is insulation used to inhibit heat transfer from pipes, boilers, tanks, ducts, and various other components of hot and cold-water systems and HVAC systems. Examples are hard cementitious “mud” type insulation on pipe elbows and tees, pipe insulation runs and risers, boiler insulation, flues; and,

3. **Miscellaneous** materials are mostly non-friable products when maintained in good condition. Examples are resilient floor coverings including vinyl, linoleum and floor tile, mastics and adhesives, cement products, caulk, drywall, ceiling tile and roofing materials.

The following table show samples identified by the laboratory to be non-asbestos containing materials (NACM). The complete analytical results can be found in Appendix B.

Table 1 – Non-Asbestos Containing Material Sample List

Sample #	Material Substance	Material Type (Surf/TSI/Misc)	Friable (Y or N)	Color	Floor	Location	Asbestos Content
13-15-01	Caulk	Misc	N	Black	Ext	Around Windows	ND
13-15-02	Mortar	Misc	N	Gray	Ext	Corner of Building	ND
13-15-03	Window Glaze	Misc	N	White	2	Windows	ND
13-15-04ABC	Plaster	Misc	Y	Gray	2	Walls Around Window	ND
13-15-05ABC	Skim Coat	Surf	Y	White	2	Walls Around Window	ND
13-15-06	Plaster	Misc	Y	Gray	Ext	Soffit	ND

Material Type – Surf=Surfacing, TSI=Thermal System Insulation, Misc=Miscellaneous / **Asbestos Content** – ND=None Detected
B=Basement, R=Roof, Int=Interior, Ext=Exterior

6.0 CONCLUSIONS / RECOMMENDATIONS

The following conclusions and recommendations are summarized as follows:

- Asbestos was not detected in any of the bulk material samples collected from the façade of the building located at 13 15 South Center Street, Marshalltown, Iowa. Based on the results of the data collected during the assessment, the façade of the building requires no further action prior to renovation.

7.0 CONDITIONS & LIMITATIONS

The Iowa Department of Natural Resources' (IDNR) Air Quality Bureau and Occupational Safety and Health Bureau (OSHA) of the Iowa Division of Labor Services require notification of any renovation/demolition activities in non-residential projects if the combined regulated ACM meets or exceeds any of the following thresholds: 160 square feet of surfacing ACM, 260 linear feet of TSI, or 35 cubic feet of ACM debris.

Impact7G has performed the tasks contained within this report in a thorough and professional manner consistent with commonly accepted standard industry practices. The results, findings, conclusions and recommendations expressed in this report are based on conditions observed during our survey of the property. Impact7G cannot guarantee, and does not warrant, that this report has identified all adverse environmental factors and/or conditions affecting the subject property. <u>This report is not a bidding document or project specification as it does not contain the necessary components</u>. Impact7G cannot warrant the work of any third party that may have aided in the completion of this report. This report has been prepared on behalf of and exclusively for use by the City of Marshalltown for specific application to their project as discussed. Contractors, consultants or other third parties reviewing this report must draw their own conclusions regarding data contained within the report, further investigation or required remediation.

APPENDIX A

Qualifications

AARON HEUSS

DOB: 06-25-1982

Issued: 04-19-2022

This person is licensed to perform asbestos work in the State of Iowa. ID card is intended for official use only and must be present on jobsite.

License Type	Number	Expires
INSPECTOR	22-8210	02-22-2023
SUPERVISOR	22-8211	02-23-2023

DIVISION OF IOWA LABOR

Asbestos

Rod A. Roberts

Rod A. Roberts
Labor Commissioner

APPENDIX B

Laboratory Reports &
Chain of Custody Documentation

EMSL Analytical, Inc.
6340 CastlePlace Dr. Indianapolis, IN 46250
Tel/Fax: (317) 803-2997 / (317) 803-3047
http://www.EMSL.com / indianapolislab@emsl.com

EMSL Order: 162211295
Customer ID: IMPA25
Customer PO:
Project ID:

Attention: Kim Crosser
Impact7G
8951 Windsor Parkway
Johnston, IA 50131

Phone: (515) 460-1124
Fax: (515) 528-8005
Received Date: 05/23/2022 9:20 AM
Analysis Date: 05/24/2022
Collected Date:

Project: CITY OF MARSHALLTOWN - 13 - 15 SOUTH CENTER

Test Report: Asbestos Analysis of Bulk Materials via EPA 600/R-93/116 Method using Polarized Light Microscopy

			Non-Asbestos		Asbestos
Sample	**Description**	**Appearance**	**% Fibrous**	**% Non-Fibrous**	**% Type**
13-15-01 *162211295-0001*	CAULK BLACK EXT - AROUND WINDOWS	Black Non-Fibrous Homogeneous		100.0% Non-fibrous (Other)	**None Detected**
13-15-02 *162211295-0002*	MORTAR GRAY EXT - CORNER OF BUILDING	Gray Non-Fibrous Homogeneous		15% Quartz 85.0% Non-fibrous (Other)	**None Detected**
13-15-03 *162211295-0003*	WINDOW GLAZE WHITE 2 - WINDOWS	White Non-Fibrous Homogeneous		100.0% Non-fibrous (Other)	**None Detected**
13-15-04A *162211295-0004*	PLASTER GRAY 2 - WALLS AROUND WINDOW	Gray Non-Fibrous Homogeneous	<1% Hair	20% Quartz 80.0% Non-fibrous (Other)	**None Detected**
13-15-04B *162211295-0005*	PLASTER GRAY 2 - WALLS AROUND WINDOW	Gray Non-Fibrous Homogeneous	<1% Hair	20% Quartz 80.0% Non-fibrous (Other)	**None Detected**
13-15-04C *162211295-0006*	PLASTER GRAY 2 - WALLS AROUND WINDOW	Gray Non-Fibrous Homogeneous	<1% Hair	20% Quartz 80.0% Non-fibrous (Other)	**None Detected**
13-15-05A *162211295-0007*	SKIM COAT WHITE 2 - WALLS AROUND WINDOW	White Non-Fibrous Homogeneous		100.0% Non-fibrous (Other)	**None Detected**
13-15-05B *162211295-0008*	SKIM COAT WHITE 2 - WALLS AROUND WINDOW	White Non-Fibrous Homogeneous		100.0% Non-fibrous (Other)	**None Detected**
13-15-05C *162211295-0009*	SKIM COAT WHITE 2 - WALLS AROUND WINDOW	White Non-Fibrous Homogeneous		100.0% Non-fibrous (Other)	**None Detected**

EMSL maintains liability limited to cost of analysis. Interpretation and use of test results are the responsibility of the client. This report relates only to the samples reported above, and may not be reproduced, except in full, without written approval by EMSL. EMSL bears no responsibility for sample collection activities or analytical method limitations. The report reflects the samples as received. Results are generated from the field sampling data (sampling volumes and areas, locations, etc.) provided by the client on the Chain of Custody. Samples are within quality control criteria and met method specifications unless otherwise noted. The above analyses were performed in general compliance with Appendix E to Subpart E of 40 CFR (previously EPA 600/M4-82-020 "Interim Method") but augmented with procedures outlined in the 1993 ("final") version of the method. This report must not be used by the client to claim product certification, approval, or endorsement by NVLAP, NIST or any agency of the federal government. Non-friable organically bound materials present a problem matrix and therefore EMSL recommends gravimetric reduction prior to analysis. Unless requested by the client, building materials manufactured with multiple layers (i.e. linoleum, wallboard, etc.) are reported as a single sample. Estimation of uncertainty is available on request.

Samples analyzed by EMSL Analytical, Inc. Indianapolis, IN NVLAP Lab Code 200188-0, AZ0939, CA 2575, CO AL-15132, TX 300262

EMSL Analytical, Inc.
6340 CastlePlace Dr. Indianapolis, IN 46250
Tel/Fax: (317) 803-2997 / (317) 803-3047
http://www.EMSL.com / indianapolislab@emsl.com

EMSL Order: 162211295
Customer ID: IMPA25
Customer PO:
Project ID:

Attention: Kim Crosser
Impact7G
8951 Windsor Parkway
Johnston, IA 50131

Phone: (515) 460-1124
Fax: (515) 528-8005
Received Date: 05/23/2022 9:20 AM
Analysis Date: 05/24/2022
Collected Date:

Project: CITY OF MARSHALLTOWN - 13 - 15 SOUTH CENTER

Test Report: Asbestos Analysis of Bulk Materials via EPA 600/R-93/116 Method using Polarized Light Microscopy

			Non-Asbestos		Asbestos
Sample	**Description**	**Appearance**	**% Fibrous**	**% Non-Fibrous**	**% Type**
13-15-06 *162211295-0010*	PLASTER GRAY EXT - SOFFIT	Gray Non-Fibrous Homogeneous		20% Quartz 80.0% Non-fibrous (Other)	**None Detected**

EMSL maintains liability limited to cost of analysis. Interpretation and use of test results are the responsibility of the client. This report relates only to the samples reported above, and may not be reproduced, except in full, without written approval by EMSL. EMSL bears no responsibility for sample collection activities or analytical method limitations. The report reflects the samples as received. Results are generated from the field sampling data (sampling volumes and areas, locations, etc.) provided by the client on the Chain of Custody. Samples are within quality control criteria and met method specifications unless otherwise noted. The above analyses were performed in general compliance with Appendix E to Subpart E of 40 CFR (previously EPA 600/M4-82-020 "Interim Method") but augmented with procedures outlined in the 1993 ("final") version of the method. This report must not be used by the client to claim product certification, approval, or endorsement by NVLAP, NIST or any agency of the federal government. Non-friable organically bound materials present a problem matrix and therefore EMSL recommends gravimetric reduction prior to analysis. Unless requested by the client, building materials manufactured with multiple layers (i.e. linoleum, wallboard, etc.) are reported as a single sample. Estimation of uncertainty is available on request.

Samples analyzed by EMSL Analytical, Inc. Indianapolis, IN NVLAP Lab Code 200188-0, AZ0939, CA 2575, CO AL-15132, TX 300262

EMSL Analytical, Inc.
6340 CastlePlace Dr. Indianapolis, IN 46250
Tel/Fax: (317) 803-2997 / (317) 803-3047
http://www.EMSL.com / indianapolislab@emsl.com

EMSL Order: 162211295
Customer ID: IMPA25
Customer PO:
Project ID:

Attention: Kim Crosser
Impact7G
8951 Windsor Parkway
Johnston, IA 50131

Phone: (515) 460-1124
Fax: (515) 528-8005
Received Date: 05/23/2022 9:20 AM
Analysis Date: 05/24/2022
Collected Date:

Project: CITY OF MARSHALLTOWN - 13 - 15 SOUTH CENTER

The samples in this report were submitted to EMSL for analysis by Asbestos Analysis of Bulk materials via EPA/600 (0513) Method using Polarized Light Microscopy. The reference number for these samples is the EMSL Order ID above. Please use this reference number when calling about these samples.

Report Comments:

Sample Receipt Date:	05/23/2022	Sample Receipt Time:	9:20 AM
Analysis Completed Date:	05/24/2022	Analysis Completed Time:	11:21 AM

Analyst(s):

Alison Pacey

Alison Pacey PLM (10)

Samples Reviewed and approved by:

Melissa Newkirk

Asbestos Laboratory Manager
or other approved signatory

EMSL maintains liability limited to cost of analysis. Interpretation and use of test results are the responsibility of the client. This report relates only to the samples reported above, and may not be reproduced, except in full, without written approval by EMSL. EMSL bears no responsibility for sample collection activities or analytical method limitations. The report reflects the samples as received. Results are generated from the field sampling data (sampling volumes and areas, locations, etc.) provided by the client on the Chain of Custody. Samples are within quality control criteria and met method specifications unless otherwise noted. The above analyses were performed in general compliance with Appendix E to Subpart E of 40 CFR (previously EPA 600/M4-82-020 "Interim Method") but augmented with procedures outlined in the 1993 ("final") version of the method. This report must not be used by the client to claim product certification, approval, or endorsement by NVLAP, NIST or any agency of the federal government. Non-friable organically bound materials present a problem matrix and therefore EMSL recommends gravimetric reduction prior to analysis. Unless requested by the client, building materials manufactured with multiple layers (i.e. linoleum, wallboard, etc.) are reported as a single sample. Estimation of uncertainty is available on request.

Samples analyzed by EMSL Analytical, Inc. Indianapolis, IN NVLAP Lab Code 200188-0, AZ0939, CA 2575, CO AL-15132, TX 300262

OrderID: 162211295

Ship Date:

EMSL ANALYTICAL, INC.
LABORATORY • PRODUCTS • TRAINING

Asbestos Chain of Custody EMSL Order Number
(Lab Use Only)

162211295

6340 Castleplace Dr.
Indianapolis, IN 46250
Phone: (317)803-2997
Fax: (317)803-3047

Company: IMPACT7G		☑ EMSL – Bill to: Same *Third Party Billing requires written authorization from third party.*	
Street: 8951 Windsor Parkway			
City: Johnston	State: IA	Zip Code: 50131	Country: USA
Report To: Kim Crosser		Phone: 515-685-2299	Fax: 515-685-2236
Email Address: kcrosser@impact7g.com		Please Provide results: EMAIL	
Project Name: CITY OF MARSHALLTOWN - 13-15 South Center			
US State Samples Taken: IA			

Turnaround Time (TAT) Options

☐ 3-Hour ☐ 6-Hour ☑ 24-Hour ☐ 32-Hour ☐ 48 -Hour ☐ 72-Hour ☐ 1 Week ☐ 2 Week

**For TEM Air 3 hr through 6 hr, please call ahead to schedule. *There is a premium charge for 3 hr TEM AHERA or EPA Level II TAT. You will be asked to sign an authorization form for this service. Analysis completed in accordance with EMSL's Terms and Conditions located in the Analytic Price Guide.*

PLM – BULK (reporting limit)
☑ PLM EPA 600/R-93/116 (<1%)

TEM – Air ☐ 4-4.5hr TAT (AHERA only)
☐ AHERA 40 CFR, Part 763

Sampler Names: Aaron Heuss
Sampler Signature:

☐ Check for Positive Stop – Clearly Identify Homogeneous Group
Filter Pore Size (Air Samples): ☐0.8 µm ☐0.45 µm

Sample ID	Sample Material/Description	Color	Floor	Location	Sample Date
13-15-01	Caulk	Balck	Ext	Around Windows	
13-15-02	Mortar	Gray	Ext	Corner of Building	
13-15-03	Window Glaze	White	2	Windows	
13-15-04ABC	Plaster	Gray	2	Walls Around Window	
13-15-05ABC	Skim Coat	White	2	Walls Around Window	
13-15-06	Plaster	Gray	Ext	Soffit	

Client Sample # (s):	13-15-01 - 13-15-06			Total #:	10
Relinquished (Client):	Aaron Heuss	Date:	5/19/2022	Time:	
Received (Lab):		Date:	5/23/22	Time:	920

Comments/Special: MARSHALLTOWN - FACADE REHABILITATION EXISTING ASBESTOS INFORMATION
RDG 3005.009.00 PLEASE SAMPLE ALL LAYERS, ADHESIVES, TEXTURES, ETC. Thanks! 00 31 26-32

LIMITED ASBESTOS CONTAINING MATERIALS INSPECTION

Commercial Property
14 16 18 North Center Street
Marshalltown, Iowa

Prepared for:

City of Marshalltown
36 N Center Street
Marshalltown, Iowa 50158

Prepared by:

8951 Windsor Parkway
Johnston, Iowa 50131

May 24, 2022

LIMITED ASBESTOS CONTAINING MATERIALS INSPECTION

Commercial Property
14 16 18 North Center Street
Marshalltown, Iowa

Inspected and Prepared by:

Aaron Heuss
Environmental Specialist I
Iowa Certified Asbestos Inspector: 22-8210I

Prepared and Reviewed by:

Kim Crosser - Harms
Sr. Project Manager
Iowa Certified Asbestos Inspector: 22-8148I

TABLE OF CONTENTS

1.0 EXECUTIVE SUMMARY 1
2.0 INTRODUCTION 2
3.0 PROPERTY DESCRIPTION 3
4.0 INSPECTION LIMITATIONS 3
5.0 INSPECTION ACTIVITIES 3
6.0 CONCLUSIONS / RECOMMENDATIONS 5
7.0 CONDITIONS & LIMITATIONS 5

LIST OF TABLES

Table 1 – Non-Asbestos Containing Material Sample List

APPENDICES

APPENDIX A - Qualifications
APPENDIX B - Laboratory Reports & Chain of Custody Documentation

1.0 EXECUTIVE SUMMARY

Impact7G, Inc. (Impact7G), completed a Limited Asbestos Containing Materials (ACM) Inspection on May 19, 2022 of the façade of the building located at 14 16 18 North Center Street, Marshalltown, Iowa (Property). The purpose of this Limited ACM Inspection is to document the presence of asbestos containing materials and assist the City of Marshalltown (Client) in facilitating renovation activities of the facade.

Asbestos was not detected in any of the nine (9) samples collected from various building components within the Property's façade. See Table 1 for additional information.

Based on these results, the Property's façade does not require any further action prior to any renovation activities.

2.0 INTRODUCTION

A. Property Information

Location:

Commercial Property
14 16 18 North Center Street
Marshalltown, Iowa 50158

Contact Person:

City of Marshalltown
Deb Millizer
36 N Center Street
Marshalltown, Iowa 50158

B. Personnel

Sr. Project Manager: Kim Crosser-Harms	State of Iowa License	22-8148I
Inspector: Aaron Heuss	State of Iowa License	22-8210I

C. Sampling Plan

According to the Client, the scope of this Limited ACM Inspection includes the façade of the building.

This Limited ACM Inspection is in accordance with OSHA Regulation 1926.1101. All samples collected in the field were sent to EMSL, an NVLAP certified laboratory for analysis. The samples were analyzed via the polarized light microscopy (PLM) method for asbestos content. If requested by Client, samples were further analyzed via the transmission electron microscopy (TEM) method or PLM 400 Point Count analysis method.

D. Regulation Review

The U.S. EPA qualifies asbestos containing materials (ACM) as materials with an asbestos content greater than 1%. According to Iowa OSHA, ACM is any material found to contain asbestos, regardless of its concentration, and shall be regulated as hazardous waste. The following definitions are taken from Section 61.141 of Subpart M, Part 61 of Title 40: Protection of Environment of the Code of Federal Regulations (CFR).

- "Category I nonfriable asbestos-containing material (ACM)" is defined as asbestos-containing packings, gaskets, resilient floor covering, and asphalt roofing products containing more than 1% asbestos as determined using the method specified in appendix E, subpart E, 40 CFR part 763, section 1, Polarized Light Microscopy (PLM).
- "Category II nonfriable ACM" is defined as any material, excluding Category I nonfriable ACM, containing more than 1% asbestos as determined using the methods specified in appendix E, subpart E, 40 CFR part 763, section 1, PLM that, when dry, ***cannot*** be crumbled, pulverized, or reduced to powder by hand pressure.
- "Friable asbestos material" is defined as any material containing more than 1% asbestos as determined using the methods specified in appendix E, subpart E, 40 CFR part 763, section 1, PLM that when dry, ***can*** be crumbled, pulverized, or

reduced to powder by hand pressure. If the asbestos content is less than 10% as determined by a method other than point counting by PLM, verify the asbestos content by point counting using PLM.

3.0 PROPERTY DESCRIPTION

The Property consists of 3 different store fronts. A dog grooming shop, a tattoo shop, and a handmade jewelry shop.

4.0 INSPECTION LIMITATIONS

An Inspection limitation, for the purpose of this report, is any action or task that is limited from the original scope work. The overall reason for any limitation is the protection of Impact7G personnel. Examples of limitations can range from a lack of accessibility to an area of the Property, unsafe work areas, collecting additional samples, etc.

- **Only the façade of the building was inspected.**

5.0 INSPECTION ACTIVITIES

Iowa certified asbestos inspectors from Impact7G collected 9 samples on May 19, 2022. The samples were collected from various accessible building components located throughout the façade. Upon completion of bulk sampling activities, samples were sent to EMSL, an NVLAP certified laboratory for analysis.

Materials that are “suspected” to contain asbestos are divided into the following three categories:

1. **Surfacing materials** are materials that are sprayed or troweled on for acoustical, decorative, or fireproofing purposes. Examples are textured ceilings or drywall, exterior stucco and structural steel fireproofing;

2. **Thermal System Insulation (TSI)** is insulation used to inhibit heat transfer from pipes, boilers, tanks, ducts, and various other components of hot and cold-water systems and HVAC systems. Examples are hard cementitious “mud” type insulation on pipe elbows and tees, pipe insulation runs and risers, boiler insulation, flues; and,

3. **Miscellaneous** materials are mostly non-friable products when maintained in good condition. Examples are resilient floor coverings including vinyl, linoleum and floor tile, mastics and adhesives, cement products, caulk, drywall, ceiling tile and roofing materials.

The following table show samples identified by the laboratory to be non-asbestos containing materials (NACM). The complete analytical results can be found in Appendix B.

Table 1 – Non-Asbestos Containing Material Sample List

Sample #	Material Substance	Material Type (Surf/TSI/Misc)	Friable (Y or N)	Color	Floor	Location	Asbestos Content
141618-01	Caulking	Misc	N	White	Ext	Where Siding Meets Block	ND
141618-02	Caulking	Misc	N	Gray	Ext	Around Windows	ND
141618-03	Caulking	Misc	N	White	Ext	Around Tile to Upstairs	ND
141618-04	Caulking	Misc	N	White	Ext	Block Meets Window	ND
141618-05	Calking	Misc	N	White	Ext	On Door	ND
141618-06	Caulking	Misc	N	Gray	Ext	Foundation	ND
141618-07	Window Glaze	Misc	N	White	2	Above all Shops	ND
141618-08	Plaster	Misc	Y	White	2	All Walls Below Windows	ND
141618-09	Skim Coat	Surf	Y	White	2	All Walls Below Windows	ND

Material Type – Surf=Surfacing, TSI=Thermal System Insulation, Misc=Miscellaneous / **Asbestos Content** – ND=None Detected
B=Basement, R=Roof, Int=Interior, Ext=Exterior

6.0 CONCLUSIONS / RECOMMENDATIONS

The following conclusions and recommendations are summarized as follows:

- Asbestos was not detected in any of the bulk material samples collected from the façade of the building located at 14 16 18 North Center Street, Marshalltown, Iowa. Based on the results of the data collected during the assessment, the façade of the building requires no further action prior to renovation.

7.0 CONDITIONS & LIMITATIONS

The Iowa Department of Natural Resources' (IDNR) Air Quality Bureau and Occupational Safety and Health Bureau (OSHA) of the Iowa Division of Labor Services require notification of any renovation/demolition activities in non-residential projects if the combined regulated ACM meets or exceeds any of the following thresholds: 160 square feet of surfacing ACM, 260 linear feet of TSI, or 35 cubic feet of ACM debris.

Impact7G has performed the tasks contained within this report in a thorough and professional manner consistent with commonly accepted standard industry practices. The results, findings, conclusions and recommendations expressed in this report are based on conditions observed during our survey of the property. Impact7G cannot guarantee, and does not warrant, that this report has identified all adverse environmental factors and/or conditions affecting the subject property. <u>This report is not a bidding document or project specification as it does not contain the necessary components</u>. Impact7G cannot warrant the work of any third party that may have aided in the completion of this report. This report has been prepared on behalf of and exclusively for use by the City of Marshalltown for specific application to their project as discussed. Contractors, consultants or other third parties reviewing this report must draw their own conclusions regarding data contained within the report, further investigation or required remediation.

APPENDIX A

Qualifications

AARON HEUSS

DOB: 06-25-1982

Issued: 04-19-2022

This person is licensed to perform asbestos work in the State of Iowa. ID card is intended for official use only and must be present on jobsite.

License Type	Number	Expires
INSPECTOR	22-8210	02-22-2023
SUPERVISOR	22-8211	02-23-2023

DIVISION OF IOWA LABOR

Asbestos

Rod A. Roberts

Rod A. Roberts
Labor Commissioner

APPENDIX B

Laboratory Reports &
Chain of Custody Documentation

EMSL Analytical, Inc.
6340 CastlePlace Dr. Indianapolis, IN 46250
Tel/Fax: (317) 803-2997 / (317) 803-3047
http://www.EMSL.com / indianapolislab@emsl.com

EMSL Order: 162211268
Customer ID: IMPA25
Customer PO:
Project ID:

Attention: Kim Crosser
Impact7G
8951 Windsor Parkway
Johnston, IA 50131

Phone: (515) 460-1124
Fax: (515) 528-8005
Received Date: 05/23/2022 9:20 AM
Analysis Date: 05/24/2022
Collected Date: 05/19/2022

Project: CITY OF MARSHALLTOWN - 14 16 18 NORTH CENTER

Test Report: Asbestos Analysis of Bulk Materials via EPA 600/R-93/116 Method using Polarized Light Microscopy

			Non-Asbestos		Asbestos
Sample	**Description**	**Appearance**	**% Fibrous**	**% Non-Fibrous**	**% Type**
141618-01 *162211268-0001*	CAULKING WHITE EXT-WHERE SIDING MEETS BLOCK	Gray Non-Fibrous Homogeneous		100.0% Non-fibrous (Other)	**None Detected**
141618-02 *162211268-0002*	CAULING GRAY EXT-AROUND WINDOWS	Black Non-Fibrous Homogeneous		100.0% Non-fibrous (Other)	**None Detected**
141618-03 *162211268-0003*	CAULKING WHITE EXT-AROUND TILE TO UPSTAIRS	Gray/White Non-Fibrous Homogeneous		100.0% Non-fibrous (Other)	**None Detected**
141618-04 *162211268-0004*	CAULKING WHITE EXT-BLOCK MEETS WINDOW	Gray/White Non-Fibrous Homogeneous		100.0% Non-fibrous (Other)	**None Detected**
141618-05 *162211268-0005*	CAULKING WHITE EXT-ON DOOR	Gray/Red Non-Fibrous Homogeneous		100.0% Non-fibrous (Other)	**None Detected**
141618-06 *162211268-0006*	CAULKING GRAY EXT-FOUNDATION	Tan/White Non-Fibrous Homogeneous		100.0% Non-fibrous (Other)	**None Detected**
141618-07 *162211268-0007*	WINDOW GLAZE WHITE 2-ABOVE ALL SHOPS	Gray/White Non-Fibrous Homogeneous		100.0% Non-fibrous (Other)	**None Detected**
141618-08 *162211268-0008*	PLASTER WHITE 2-ALL WALLS BELOW WINDOWS	Gray Non-Fibrous Homogeneous	<1% Cellulose	20% Perlite 80.0% Non-fibrous (Other)	**None Detected**
141618-09 *162211268-0009*	SKIM COAT WHITE 2-ALL WALLS BELOW WINDOWS	White Non-Fibrous Homogeneous		15% Quartz 85.0% Non-fibrous (Other)	**None Detected**

EMSL maintains liability limited to cost of analysis. Interpretation and use of test results are the responsibility of the client. This report relates only to the samples reported above, and may not be reproduced, except in full, without written approval by EMSL. EMSL bears no responsibility for sample collection activities or analytical method limitations. The report reflects the samples as received. Results are generated from the field sampling data (sampling volumes and areas, locations, etc.) provided by the client on the Chain of Custody. Samples are within quality control criteria and met method specifications unless otherwise noted. The above analyses were performed in general compliance with Appendix E to Subpart E of 40 CFR (previously EPA 600/M4-82-020 "Interim Method") but augmented with procedures outlined in the 1993 ("final") version of the method. This report must not be used by the client to claim product certification, approval, or endorsement by NVLAP, NIST or any agency of the federal government. Non-friable organically bound materials present a problem matrix and therefore EMSL recommends gravimetric reduction prior to analysis. Unless requested by the client, building materials manufactured with multiple layers (i.e. linoleum, wallboard, etc.) are reported as a single sample. Estimation of uncertainty is available on request.

Samples analyzed by EMSL Analytical, Inc. Indianapolis, IN NVLAP Lab Code 200188-0, AZ0939, CA 2575, CO AL-15132, TX 300262

EMSL Analytical, Inc.
6340 CastlePlace Dr. Indianapolis, IN 46250
Tel/Fax: (317) 803-2997 / (317) 803-3047
http://www.EMSL.com / indianapolislab@emsl.com

EMSL Order: 162211268
Customer ID: IMPA25
Customer PO:
Project ID:

Attention: Kim Crosser
Impact7G
8951 Windsor Parkway
Johnston, IA 50131

Phone: (515) 460-1124
Fax: (515) 528-8005
Received Date: 05/23/2022 9:20 AM
Analysis Date: 05/24/2022
Collected Date: 05/19/2022

Project: CITY OF MARSHALLTOWN - 14 16 18 NORTH CENTER

The samples in this report were submitted to EMSL for analysis by Asbestos Analysis of Bulk materials via EPA/600 (0513) Method using Polarized Light Microscopy. The reference number for these samples is the EMSL Order ID above. Please use this reference number when calling about these samples.

Report Comments:

Sample Receipt Date:	05/23/2022	Sample Receipt Time:	9:20 AM
Analysis Completed Date:	05/24/2022	Analysis Completed Time:	10:02 AM

Analyst(s):

Ross A. Matlock

Ross Matlock PLM (9)

Samples Reviewed and approved by:

Melissa Newkirk

Asbestos Laboratory Manager
or other approved signatory

EMSL maintains liability limited to cost of analysis. Interpretation and use of test results are the responsibility of the client. This report relates only to the samples reported above, and may not be reproduced, except in full, without written approval by EMSL. EMSL bears no responsibility for sample collection activities or analytical method limitations. The report reflects the samples as received. Results are generated from the field sampling data (sampling volumes and areas, locations, etc.) provided by the client on the Chain of Custody. Samples are within quality control criteria and met method specifications unless otherwise noted. The above analyses were performed in general compliance with Appendix E to Subpart E of 40 CFR (previously EPA 600/M4-82-020 "Interim Method") but augmented with procedures outlined in the 1993 ("final") version of the method. This report must not be used by the client to claim product certification, approval, or endorsement by NVLAP, NIST or any agency of the federal government. Non-friable organically bound materials present a problem matrix and therefore EMSL recommends gravimetric reduction prior to analysis. Unless requested by the client, building materials manufactured with multiple layers (i.e. linoleum, wallboard, etc.) are reported as a single sample. Estimation of uncertainty is available on request.

Samples analyzed by EMSL Analytical, Inc. Indianapolis, IN NVLAP Lab Code 200188-0, AZ0939, CA 2575, CO AL-15132, TX 300262

OrderID: 162211268

Ship Date:

EMSL ANALYTICAL, INC.
LABORATORY • PRODUCTS • TRAINING

Asbestos Chain of Custody EMSL Order Number
(Lab Use Only)

162211268

6340 Castleplace Dr.
Indianapolis, IN 46250
Phone: (317)803-2997
Fax: (317)803-3047

Company: IMPACT7G		☑ EMSL – Bill to: Same *Third Party Billing requires written authorization from third party.*	
Street: 8951 Windsor Parkway			
City: Johnston	State: IA	Zip Code: 50131	Country: USA
Report To: Kim Crosser		Phone: 515-685-2299	Fax: 515-685-2236
Email Address: kcrosser@impact7g.com		Please Provide results: EMAIL	
Project Name: City of Marshalltown - 14 16 18 North Center			
US State Samples Taken: IA			

Turnaround Time (TAT) Options

☐ 3-Hour ☐ 6-Hour ☑ 24-Hour ☐ 32-Hour ☐ 48 -Hour ☐ 72-Hour ☐ 1 Week ☐ 2 Week

**For TEM Air 3 hr through 6 hr, please call ahead to schedule. *There is a premium charge for 3 hr TEM AHERA or EPA Level II TAT You will be asked to sign on authorization form for this service. Analysis completed in accordance with EMSL's Terms and Conditions located in the Analytic Price Guide.*

PLM – BULK (reporting limit)
☑ PLM EPA 600/R-93/116 (<1%)

TEM – Air ☐ 4-4.5hr TAT (AHERA only)
☐ AHERA 40 CFR, Part 763

Sampler Names: Aaron Heuss
Sampler Signature: [signature]

☐ Check for Positive Stop – Clearly Identify Homogeneous Group
Filter Pore Size (Air Samples): ☐0.8 µm ☐0.45 µm

Sample ID	Sample Material/Description	Color	Floor	Location	Sample Date
141618-01	Caulking	White	Ext	Where Siding Meets Block	
141618-02	Caulkjing	Gray	Ext	Around Windows	
141618-03	Caulking	White	Ext	Around Tile to Upstairs	
141618-04	Caulking	White	Ext	Block Meets Window	
141618-05	Calking	White	Ext	On Door	
141618-06	Caulking	Gray	Ext	Foundation	
141618-07	Window Glaze	White	2	Above all Shops	
141618-08	Plaster	White	2	All Walls Below Windows	
141618-09	Skim Coat	White	2	All Walls Below Windows	

Client Sample # (s):	141618-01-09			Total #:	9
Relinquished (Client):	Aaron Heuss	Date:	5/19/2022	Time:	
Received (Lab):	[signature]	Date:	5/23/22	Time:	9:20

OrderID: 162211268

Ship Date:

Comments/Special Instructions:	PLEASE SAMPLE ALL LAYERS, ADHESIVES, TEXTURES, ETC. Thanks!

LIMITED ASBESTOS CONTAINING MATERIALS INSPECTION

Commercial Property
14 West Main Street
Marshalltown, Iowa

Prepared for:

City of Marshalltown
36 N Center Street
Marshalltown, Iowa 50158

Prepared by:

8951 Windsor Parkway
Johnston, Iowa 50131

May 24, 2022

LIMITED ASBESTOS CONTAINING MATERIALS INSPECTION

Commercial Property
14 West Main Street
Marshalltown, Iowa

Inspected and Prepared by:

Aaron Heuss
Environmental Specialist I
Iowa Certified Asbestos Inspector: 22-8210I

Prepared and Reviewed by:

Kim Crosser - Harms
Sr. Project Manager
Iowa Certified Asbestos Inspector: 22-8148I

TABLE OF CONTENTS

1.0 EXECUTIVE SUMMARY 1
2.0 INTRODUCTION 2
3.0 PROPERTY DESCRIPTION 3
4.0 INSPECTION LIMITATIONS 3
5.0 INSPECTION ACTIVITIES 3
6.0 CONCLUSIONS / RECOMMENDATIONS 6
7.0 CONDITIONS & LIMITATIONS 6

LIST OF TABLES

Table 1 – Asbestos Containing Material Sample List
Table 2 – Non-Asbestos Containing Material Sample List

APPENDICES

APPENDIX A - Qualifications
APPENDIX B - Laboratory Reports & Chain of Custody Documentation
APPENDIX C - Photographs

1.0 EXECUTIVE SUMMARY

Impact7G, Inc. (Impact7G), completed a Limited Asbestos Containing Materials (ACM) Inspection on May 19, 2022 of the façade of the building located at 14 West Main Street, Marshalltown, Iowa (Property). The purpose of this Limited ACM Inspection is to document the presence of asbestos containing materials and assist the City of Marshalltown (Client) in facilitating renovation activities of the facade.

Asbestos was detected in two (2) of the eight (8) samples collected from various building components within the Property's facade. See Table 1 for additional information. ACMs include:

- Window Glaze
- Caulking

All building materials similar in appearance, color, and/or texture to those determined to contain asbestos must be assumed to contain asbestos throughout this building.

Based on these results, the Property's façade requires further action prior to any renovation activities.

2.0 INTRODUCTION

A. Property Information

Location:

Commercial Property
14 West Main Street
Marshalltown, Iowa 50158

Contact Person:

City of Marshalltown
Deb Millizer
36 N Center Street
Marshalltown, Iowa 50158

B. Personnel

Sr. Project Manager: Kim Crosser-Harms	State of Iowa License	22-8148I
Inspector: Aaron Heuss	State of Iowa License	22-8210I

C. Sampling Plan

According to the Client, the scope of this Limited ACM Inspection includes the façade of the building.

This Limited ACM Inspection is in accordance with OSHA Regulation 1926.1101. All samples collected in the field were sent to EMSL, an NVLAP certified laboratory for analysis. The samples were analyzed via the polarized light microscopy (PLM) method for asbestos content. If requested by Client, samples were further analyzed via the transmission electron microscopy (TEM) method or PLM 400 Point Count analysis method.

D. Regulation Review

The U.S. EPA qualifies asbestos containing materials (ACM) as materials with an asbestos content greater than 1%. According to Iowa OSHA, ACM is any material found to contain asbestos, regardless of its concentration, and shall be regulated as hazardous waste. The following definitions are taken from Section 61.141 of Subpart M, Part 61 of Title 40: Protection of Environment of the Code of Federal Regulations (CFR).

- "Category I nonfriable asbestos-containing material (ACM)" is defined as asbestos-containing packings, gaskets, resilient floor covering, and asphalt roofing products containing more than 1% asbestos as determined using the method specified in appendix E, subpart E, 40 CFR part 763, section 1, Polarized Light Microscopy (PLM).
- "Category II nonfriable ACM" is defined as any material, excluding Category I nonfriable ACM, containing more than 1% asbestos as determined using the methods specified in appendix E, subpart E, 40 CFR part 763, section 1, PLM that, when dry, ***cannot*** be crumbled, pulverized, or reduced to powder by hand pressure.
- "Friable asbestos material" is defined as any material containing more than 1% asbestos as determined using the methods specified in appendix E, subpart E, 40 CFR part 763, section 1, PLM that when dry, ***can*** be crumbled, pulverized, or

reduced to powder by hand pressure. If the asbestos content is less than 10% as determined by a method other than point counting by PLM, verify the asbestos content by point counting using PLM.

3.0 PROPERTY DESCRIPTION

The Property consists of a 2-story 1900 SF brick building which is occupied by Stepping Stones Christian Book Store.

4.0 INSPECTION LIMITATIONS

An Inspection limitation, for the purpose of this report, is any action or task that is limited from the original scope work. The overall reason for any limitation is the protection of Impact7G personnel. Examples of limitations can range from a lack of accessibility to an area of the Property, unsafe work areas, collecting additional samples, etc.

- **Only the façade of the building was inspected.**

5.0 INSPECTION ACTIVITIES

Iowa certified asbestos inspectors from Impact7G collected 8 samples on May 19, 2022. The samples were collected from various accessible building components located throughout the façade. Upon completion of bulk sampling activities, samples were sent to EMSL, an NVLAP certified laboratory for analysis.

Materials that are “suspected” to contain asbestos are divided into the following three categories:

1. **Surfacing materials** are materials that are sprayed or troweled on for acoustical, decorative, or fireproofing purposes. Examples are textured ceilings or drywall, exterior stucco and structural steel fireproofing;

2. **Thermal System Insulation (TSI)** is insulation used to inhibit heat transfer from pipes, boilers, tanks, ducts, and various other components of hot and cold-water systems and HVAC systems. Examples are hard cementitious “mud” type insulation on pipe elbows and tees, pipe insulation runs and risers, boiler insulation, flues; and,

3. **Miscellaneous** materials are mostly non-friable products when maintained in good condition. Examples are resilient floor coverings including vinyl, linoleum and floor tile, mastics and adhesives, cement products, caulk, drywall, ceiling tile and roofing materials.

The following tables show samples positively identified by the laboratory to be asbestos containing materials (ACM) and samples that were analyzed as non-ACM. The complete analytical results can be found in Appendix B.

Table 1 – Non-Asbestos Containing Material Sample List

Sample #	Material Substance	Material Type (Surf/TSI/Misc)	Friable (Y or N)	Color	Floor	Location	Asbestos Content	Estimated Quantities
14WM-01	Window Glaze	Misc	N	Gray/White	2	Upstairs Windows	<1% Chrysotile	4 EA
14WM-07	Caulking	Misc	N	Gray/Tan	Ext	Old Caulking Around Front	5% Chrysotile	50 LF

Material Type – Surf=Surfacing, TSI=Thermal System Insulation, Misc=Miscellaneous / **Asbestos Content** – ND=None Detected
B=Basement, R=Roof, Int=Interior, Ext=Exterior

One (1) bulk material sample was analyzed greater than 1% asbestos. One (1) of the remaining building material samples was detected with a concentration of <1% asbestos. ACMs include window glaze and caulking. If during demolition or renovation activities additional areas of identified ACM are discovered, they should be abated accordingly. Laboratory analytical reports are provided in Appendix B.

Though an asbestos abatement contractor is not required to remove materials containing 1% or less asbestos, these materials must be removed wet and promptly contained and disposed of in leak-tight containers. Materials containing 1% or less asbestos are not required to be disposed of at an approved landfill as asbestos waste material.

Employers of those engaging in the disturbance of 1% or less asbestos are required to provide their workers with Asbestos Awareness training of at least two hours prior to disturbance of said materials. Further, those removing materials containing 1% or less asbestos must maintain documentation proving that breathing zone exposures do not exceed either OSHA's permissible exposure limit or short-term excursion limit.

It is important to note that these are estimated quantities; therefore, the abatement contractors and the client representative should discern between the estimated quantity above and future exploration of the property at the pre-bid walk-through to determine the final quantity during abatement procedures.

Table 2 – Non-Asbestos Containing Material Sample List

Sample #	Material Substance	Material Type (Surf/TSI/Misc)	Friable (Y or N)	Color	Floor	Location	Asbestos Content
14WM-02	Drywall	Misc	N	Brown/White	2	Walls Around Window	ND
14WM-03	Drywall Compound	Misc	N	White	2	Walls Around Window	ND
14WM-04	Drywall Tape	Misc	N	White	2	Walls Around Window	ND
14WM-05	Caulking	Misc	N	Black	Ext	Around Main Entrance	ND
14WM-06	Grout	Misc	N	Tan/Brown	Ext	Tile Grout	ND
14WM-08	Caulking	Misc	N	Gray	1	Interior Around Windows	ND

Material Type – Surf=Surfacing, TSI=Thermal System Insulation, Misc=Miscellaneous / **Asbestos Content** – ND=None Detected
B=Basement, R=Roof, Int=Interior, Ext=Exterior

6.0 CONCLUSIONS / RECOMMENDATIONS

The following conclusions and recommendations are summarized as follows:

- Asbestos was detected in two (2) of the bulk material samples collected from the façade of the building located at 14 West Main Street, Marshalltown, Iowa. ACM's include window glaze and caulking. Based on the results of the data collected during the assessment, the façade of the building requires further action prior to renovation.

Impact7G recommends the abatement of all ACM containing components located within the inspection area if those building materials are to be disturbed during any future renovation/demolition activities. All abatement work shall be completed in accordance with local, state, and federal regulations. A visual inspection is recommended upon completion of abatement work to document that all ACMs within the scope of abatement have been removed.

7.0 CONDITIONS & LIMITATIONS

The Iowa Department of Natural Resources' (IDNR) Air Quality Bureau and Occupational Safety and Health Bureau (OSHA) of the Iowa Division of Labor Services require notification of any renovation/demolition activities in non-residential projects if the combined regulated ACM meets or exceeds any of the following thresholds: 160 square feet of surfacing ACM, 260 linear feet of TSI, or 35 cubic feet of ACM debris.

Impact7G has performed the tasks contained within this report in a thorough and professional manner consistent with commonly accepted standard industry practices. The results, findings, conclusions and recommendations expressed in this report are based on conditions observed during our survey of the property. Impact7G cannot guarantee, and does not warrant, that this report has identified all adverse environmental factors and/or conditions affecting the subject property. This report is not a bidding document or project specification as it does not contain the necessary components. Impact7G cannot warrant the work of any third party that may have aided in the completion of this report. This report has been prepared on behalf of and exclusively for use by the City of Marshalltown for specific application to their project as discussed. Contractors, consultants or other third parties reviewing this report must draw their own conclusions regarding data contained within the report, further investigation or required remediation.

APPENDIX A

Qualifications

AARON HEUSS

DOB: 06-25-1982

Issued: 04-19-2022

This person is licensed to perform asbestos work in the State of Iowa. ID card is intended for official use only and must be present on jobsite.

License Type	Number	Expires
INSPECTOR	22-8210	02-22-2023
SUPERVISOR	22-8211	02-23-2023

DIVISION OF IOWA LABOR

Asbestos

Rod A. Roberts

Rod A. Roberts
Labor Commissioner

APPENDIX B

Laboratory Reports &
Chain of Custody Documentation

EMSL Analytical, Inc.
6340 CastlePlace Dr. Indianapolis, IN 46250
Tel/Fax: (317) 803-2997 / (317) 803-3047
http://www.EMSL.com / indianapolislab@emsl.com

EMSL Order: 162211280
Customer ID: IMPA25
Customer PO:
Project ID:

Attention: Kim Crosser
Impact7G
8951 Windsor Parkway
Johnston, IA 50131

Phone: (515) 460-1124
Fax: (515) 528-8005
Received Date: 05/23/2022 9:20 AM
Analysis Date: 05/24/2022
Collected Date:

Project: CITY OF MARSHALLTOWN - 14 WEST MAIN

Test Report: Asbestos Analysis of Bulk Materials via EPA 600/R-93/116 Method using Polarized Light Microscopy

			Non-Asbestos		Asbestos
Sample	**Description**	**Appearance**	**% Fibrous**	**% Non-Fibrous**	**% Type**
14-01 *162211280-0001*	WINDOW GLAZE WHITE 2 - UPSTAIRS WINDOWS	Gray/White Non-Fibrous Homogeneous		100.0% Non-fibrous (Other)	**<1% Chrysotile**
14-02 *162211280-0002*	DRYWALL WHITE 2 - WALLS AROUND WINDOW	Brown/White Fibrous Heterogeneous	20% Cellulose	75% Gypsum 5.0% Non-fibrous (Other)	**None Detected**
14-03 *162211280-0003*	DRYWALL COMPOUND WHITE 2 - WALLS AROUND WINDOW	White Non-Fibrous Homogeneous		100.0% Non-fibrous (Other)	**None Detected**
14-04 *162211280-0004*	DRYWALL TAPE WHITE 2 -WALLS AROUND WINDOW	White Fibrous Homogeneous	95% Cellulose	5.0% Non-fibrous (Other)	**None Detected**
14-05 *162211280-0005*	CAULKING BLACK EXT - AROUND MAIN ENTRANCE	Black Non-Fibrous Homogeneous		100.0% Non-fibrous (Other)	**None Detected**
14-06 *162211280-0006*	GROUT TAN EXT - TILE GROUT	Brown Non-Fibrous Homogeneous		20% Quartz 80.0% Non-fibrous (Other)	**None Detected**
14-07 *162211280-0007*	CAULKING WHITE EXT - OLD CAULKING AROUND FRONT	Gray/Tan Non-Fibrous Homogeneous		95.0% Non-fibrous (Other)	**5% Chrysotile**
14-08 *162211280-0008*	CAULKING GRAY 1 - INTERIOR AROUND WINDOWS	Gray Non-Fibrous Homogeneous		100.0% Non-fibrous (Other)	**None Detected**

EMSL maintains liability limited to cost of analysis. Interpretation and use of test results are the responsibility of the client. This report relates only to the samples reported above, and may not be reproduced, except in full, without written approval by EMSL. EMSL bears no responsibility for sample collection activities or analytical method limitations. The report reflects the samples as received. Results are generated from the field sampling data (sampling volumes and areas, locations, etc.) provided by the client on the Chain of Custody. Samples are within quality control criteria and met method specifications unless otherwise noted. The above analyses were performed in general compliance with Appendix E to Subpart E of 40 CFR (previously EPA 600/M4-82-020 "Interim Method") but augmented with procedures outlined in the 1993 ("final") version of the method. This report must not be used by the client to claim product certification, approval, or endorsement by NVLAP, NIST or any agency of the federal government. Non-friable organically bound materials present a problem matrix and therefore EMSL recommends gravimetric reduction prior to analysis. Unless requested by the client, building materials manufactured with multiple layers (i.e. linoleum, wallboard, etc.) are reported as a single sample. Estimation of uncertainty is available on request.

Samples analyzed by EMSL Analytical, Inc. Indianapolis, IN NVLAP Lab Code 200188-0, AZ0939, CA 2575, CO AL-15132, TX 300262

EMSL Analytical, Inc.
6340 CastlePlace Dr. Indianapolis, IN 46250
Tel/Fax: (317) 803-2997 / (317) 803-3047
http://www.EMSL.com / indianapolislab@emsl.com

EMSL Order: 162211280
Customer ID: IMPA25
Customer PO:
Project ID:

Attention: Kim Crosser
Impact7G
8951 Windsor Parkway
Johnston, IA 50131

Phone: (515) 460-1124
Fax: (515) 528-8005
Received Date: 05/23/2022 9:20 AM
Analysis Date: 05/24/2022
Collected Date:

Project: CITY OF MARSHALLTOWN - 14 WEST MAIN

The samples in this report were submitted to EMSL for analysis by Asbestos Analysis of Bulk materials via EPA/600 (0513) Method using Polarized Light Microscopy. The reference number for these samples is the EMSL Order ID above. Please use this reference number when calling about these samples.

Report Comments:

Sample Receipt Date:	05/23/2022	Sample Receipt Time:	9:20 AM
Analysis Completed Date:	05/24/2022	Analysis Completed Time:	9:53 AM

Analyst(s):

Paul Rihm PLM (8)

Samples Reviewed and approved by:

Asbestos Laboratory Manager
or other approved signatory

EMSL maintains liability limited to cost of analysis. Interpretation and use of test results are the responsibility of the client. This report relates only to the samples reported above, and may not be reproduced, except in full, without written approval by EMSL. EMSL bears no responsibility for sample collection activities or analytical method limitations. The report reflects the samples as received. Results are generated from the field sampling data (sampling volumes and areas, locations, etc.) provided by the client on the Chain of Custody. Samples are within quality control criteria and met method specifications unless otherwise noted. The above analyses were performed in general compliance with Appendix E to Subpart E of 40 CFR (previously EPA 600/M4-82-020 "Interim Method") but augmented with procedures outlined in the 1993 ("final") version of the method. This report must not be used by the client to claim product certification, approval, or endorsement by NVLAP, NIST or any agency of the federal government. Non-friable organically bound materials present a problem matrix and therefore EMSL recommends gravimetric reduction prior to analysis. Unless requested by the client, building materials manufactured with multiple layers (i.e. linoleum, wallboard, etc.) are reported as a single sample. Estimation of uncertainty is available on request.

Samples analyzed by EMSL Analytical, Inc. Indianapolis, IN NVLAP Lab Code 200188-0, AZ0939, CA 2575, CO AL-15132, TX 300262

OrderID: 162211280

Ship Date:

EMSL ANALYTICAL, INC.
LABORATORY • PRODUCTS • TRAINING

Asbestos Chain of Custody EMSL Order Number

(Lab Use Only)

162211280

6340 Castleplace Dr.
Indianapolis, IN 46250
Phone: (317)803-2997
Fax: (317)803-3047

Company: IMPACT7G		☑ EMSL – Bill to: Same *Third Party Billing requires written authorization from third party.*	
Street: 8951 Windsor Parkway			
City: Johnston	State: IA	Zip Code: 50131	Country: USA
Report To: Kim Crosser		Phone: 515-685-2299	Fax: 515-685-2236
Email Address: kcrosser@impact7g.com		Please Provide results: EMAIL	
Project Name: City of Marshalltown - 14 West Main			
US State Samples Taken: IA			

Turnaround Time (TAT) Options

☐ 3-Hour ☐ 6-Hour ☑ 24-Hour ☐ 32-Hour ☐ 48 -Hour ☐ 72-Hour ☐ 1 Week ☐ 2 Week

**For TEM Air 3 hr through 6 hr, please call ahead to schedule. *There is a premium charge for 3 hr TEM AHERA or EPA Level II TAT. You will be asked to sign an authorization form for this service Analysis completed in accordance with EMSL's Terms and Conditions located in the Analytic Price Guide*

PLM – BULK (reporting limit)
☑ PLM EPA 600/R-93/116 (<1%)

TEM – Air ☐ 4-4.5hr TAT (AHERA only)
☐ AHERA 40 CFR, Part 763

Sampler Names: Aaron Heuss

Sampler Signature:

☐ Check for Positive Stop – Clearly Identify Homogeneous Group

Filter Pore Size (Air Samples): ☐0.8 µm ☐0.45 µm

Sample ID	Sample Material/Description	Color	Floor	Location	Sample Date
14-01	Window Glaze	White	2	Upstairs Windows	
14-02	Drywall	White	2	Walls Around Window	
14-03	Drywall Compound	White	2	Walls Around Window	
14-04	Drywall Tape	White	2	Walls Around Window	
14-05	Caulking	Black	Ext	Around Main Entrance	
14-06	Grout	Tan	Ext	tile Grout	
14-07	Caulking	White	Ext	Old Caulking Around Front	
14-08	Caulking	Gray	1	Interior Around Windows	

Client Sample # (s):	14-01 - 14-08			Total #:	8
Relinquished (Client):	Aaron Heuss	Date:	5/19/2022	Time:	
Received (Lab):		Date:	5/23/22	Time:	920
Comments/Special Instructions:	PLEASE SAMPLE ALL LAYERS, ADHESIVES, TEXTURES, ETC. Thanks!				

APPENDIX C

Photographs

Photograph table includes photos of all asbestos-containing materials.

5/19/22 **Photographer:** **Aaron Heuss**	**Asbestos Containing Materials Inspection** **14 West Main Street** **Marshalltown, Iowa**
Photo #1 **Description:** ACM Gray/White Window Glaze **Location:** 2nd Floor, Upstairs Windows **Sample** 14WM-01	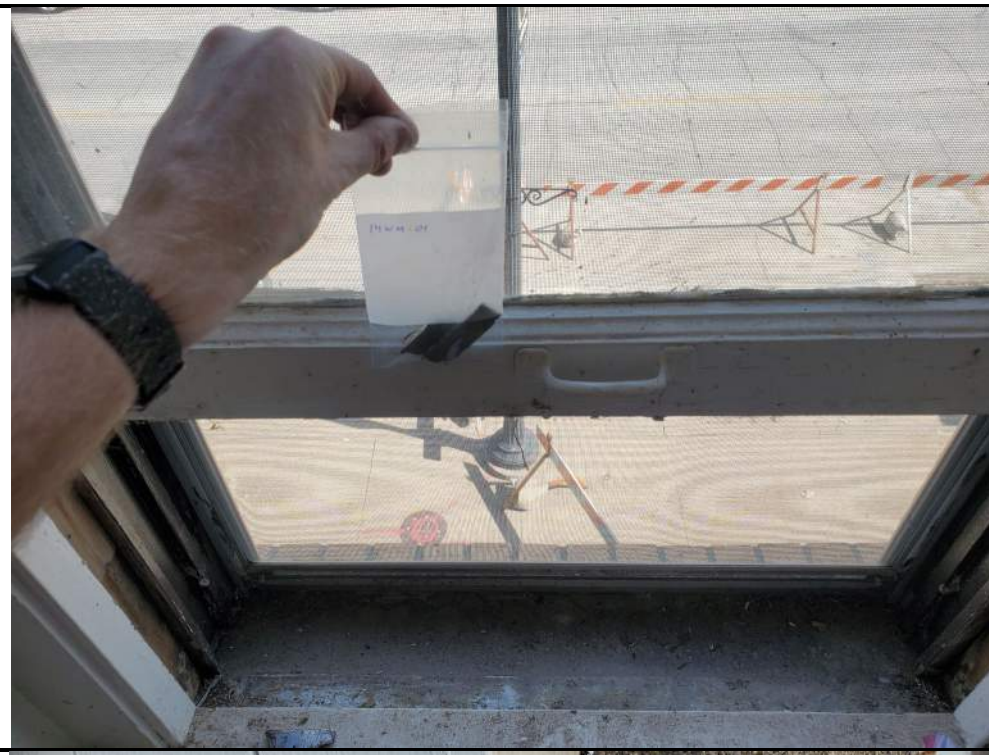
Photo #2 **Description:** ACM Gray Plaster **Location:** Exterior, Soffit **Sample** 14WM-07	

LIMITED ASBESTOS CONTAINING MATERIALS INSPECTION

Commercial Property
19 West Main Street
Marshalltown, Iowa

Prepared for:

City of Marshalltown
36 N Center Street
Marshalltown, Iowa 50158

Prepared by:

IMPACT7G

8951 Windsor Parkway
Johnston, Iowa 50131

May 24, 2022

LIMITED ASBESTOS CONTAINING MATERIALS INSPECTION

Commercial Property
19 West Main Street
Marshalltown, Iowa

Inspected and Prepared by:

Aaron Heuss
Environmental Specialist I
Iowa Certified Asbestos Inspector: 22-8210I

Prepared and Reviewed by:

Kim Crosser - Harms
Sr. Project Manager
Iowa Certified Asbestos Inspector: 22-8148I

TABLE OF CONTENTS

1.0 EXECUTIVE SUMMARY 1
2.0 INTRODUCTION 2
3.0 PROPERTY DESCRIPTION 3
4.0 INSPECTION LIMITATIONS 3
5.0 INSPECTION ACTIVITIES 3
6.0 CONCLUSIONS / RECOMMENDATIONS 6
7.0 CONDITIONS & LIMITATIONS 6

LIST OF TABLES

Table 1 – Asbestos Containing Material Sample List
Table 2 – Non-Asbestos Containing Material Sample List

APPENDICES

APPENDIX A - Qualifications
APPENDIX B - Laboratory Reports & Chain of Custody Documentation
APPENDIX C - Photographs

1.0 EXECUTIVE SUMMARY

Impact7G, Inc. (Impact7G), completed a Limited Asbestos Containing Materials (ACM) Inspection on May 19, 2022 of the façade of the building located at 19 West Main Street, Marshalltown, Iowa (Property). The purpose of this Limited ACM Inspection is to document the presence of asbestos containing materials and assist the City of Marshalltown (Client) in facilitating renovation activities of the facade.

Asbestos was detected in four (4) of the seven (7) samples collected from various building components within the Property's facade. See Table 1 for additional information. ACMs include:

- Caulking(s)
- Plaster
- Slate Adhesive

All building materials similar in appearance, color, and/or texture to those determined to contain asbestos must be assumed to contain asbestos throughout this building.

Based on these results, the Property's façade requires further action prior to any renovation activities.

2.0 INTRODUCTION

A. Property Information

Location:

Commercial Property
19 West Main Street
Marshalltown, Iowa 50158

Contact Person:

City of Marshalltown
Deb Millizer
36 N Center Street
Marshalltown, Iowa 50158

B. Personnel

Sr. Project Manager: Kim Crosser-Harms	State of Iowa License	22-8148I
Inspector: Aaron Heuss	State of Iowa License	22-8210I

C. Sampling Plan

According to the Client, the scope of this Limited ACM Inspection includes the façade of the building.

This Limited ACM Inspection is in accordance with OSHA Regulation 1926.1101. All samples collected in the field were sent to EMSL, an NVLAP certified laboratory for analysis. The samples were analyzed via the polarized light microscopy (PLM) method for asbestos content. If requested by Client, samples were further analyzed via the transmission electron microscopy (TEM) method or PLM 400 Point Count analysis method.

D. Regulation Review

The U.S. EPA qualifies asbestos containing materials (ACM) as materials with an asbestos content greater than 1%. According to Iowa OSHA, ACM is any material found to contain asbestos, regardless of its concentration, and shall be regulated as hazardous waste. The following definitions are taken from Section 61.141 of Subpart M, Part 61 of Title 40: Protection of Environment of the Code of Federal Regulations (CFR).

- "Category I nonfriable asbestos-containing material (ACM)" is defined as asbestos-containing packings, gaskets, resilient floor covering, and asphalt roofing products containing more than 1% asbestos as determined using the method specified in appendix E, subpart E, 40 CFR part 763, section 1, Polarized Light Microscopy (PLM).
- "Category II nonfriable ACM" is defined as any material, excluding Category I nonfriable ACM, containing more than 1% asbestos as determined using the methods specified in appendix E, subpart E, 40 CFR part 763, section 1, PLM that, when dry, ***cannot*** be crumbled, pulverized, or reduced to powder by hand pressure.
- "Friable asbestos material" is defined as any material containing more than 1% asbestos as determined using the methods specified in appendix E, subpart E, 40 CFR part 763, section 1, PLM that when dry, ***can*** be crumbled, pulverized, or

reduced to powder by hand pressure. If the asbestos content is less than 10% as determined by a method other than point counting by PLM, verify the asbestos content by point counting using PLM.

3.0 PROPERTY DESCRIPTION

The Property consists of a 2-story Tobacco and Vape Outlet.

4.0 INSPECTION LIMITATIONS

An Inspection limitation, for the purpose of this report, is any action or task that is limited from the original scope work. The overall reason for any limitation is the protection of Impact7G personnel. Examples of limitations can range from a lack of accessibility to an area of the Property, unsafe work areas, collecting additional samples, etc.

- **Only the façade of the building was inspected.**

5.0 INSPECTION ACTIVITIES

Iowa certified asbestos inspectors from Impact7G collected 7 samples on May 19, 2022. The samples were collected from various accessible building components located throughout the façade. Upon completion of bulk sampling activities, samples were sent to EMSL, an NVLAP certified laboratory for analysis.

Materials that are “suspected” to contain asbestos are divided into the following three categories:

1. **Surfacing materials** are materials that are sprayed or troweled on for acoustical, decorative, or fireproofing purposes. Examples are textured ceilings or drywall, exterior stucco and structural steel fireproofing;

2. **Thermal System Insulation (TSI)** is insulation used to inhibit heat transfer from pipes, boilers, tanks, ducts, and various other components of hot and cold-water systems and HVAC systems. Examples are hard cementitious “mud” type insulation on pipe elbows and tees, pipe insulation runs and risers, boiler insulation, flues; and,

3. **Miscellaneous** materials are mostly non-friable products when maintained in good condition. Examples are resilient floor coverings including vinyl, linoleum and floor tile, mastics and adhesives, cement products, caulk, drywall, ceiling tile and roofing materials.

The following tables show samples positively identified by the laboratory to be asbestos containing materials (ACM) and samples that were analyzed as non-ACM. The complete analytical results can be found in Appendix B.

Table 1 – Non-Asbestos Containing Material Sample List

Sample #	Material Substance	Material Type (Surf/TSI/Misc)	Friable (Y or N)	Color	Floor	Location	Asbestos Content	Estimated Quantities
19WM-01	Caulking	Misc	N	White	Ext	Around Entry	3% Chrysotile	80 LF
19WM-04	Plaster	Misc	N	White	Ext	Soffit	<1% Chrysotile	100 SF
19WM-05	Caulking	Misc	N	white	Ext	Where Wall Meets Window	2% Chrysotile	25 LF
19WM-07	Slate Adhesive	Misc	N	Black	Ext	Behind Slate	10% Chrysotile	50 SF

Material Type – Surf=Surfacing, TSI=Thermal System Insulation, Misc=Miscellaneous / **Asbestos Content** – ND=None Detected
B=Basement, R=Roof, Int=Interior, Ext=Exterior

Three (3) bulk material samples were analyzed greater than 1% asbestos. One (1) of the remaining building material samples were detected with a concentration of <1% asbestos. ACMs include caulking(s), plaster and slate adhesive. If during demolition or renovation activities additional areas of identified ACM are discovered, they should be abated accordingly. Laboratory analytical reports are provided in Appendix B.

Though an asbestos abatement contractor is not required to remove materials containing 1% or less asbestos, these materials must be removed wet and promptly contained and disposed of in leak-tight containers. Materials containing 1% or less asbestos are not required to be disposed of at an approved landfill as asbestos waste material.

Employers of those engaging in the disturbance of 1% or less asbestos are required to provide their workers with Asbestos Awareness training of at least two hours prior to disturbance of said materials. Further, those removing materials containing 1% or less asbestos must maintain documentation proving that breathing zone exposures do not exceed either OSHA's permissible exposure limit or short-term excursion limit.

It is important to note that these are estimated quantities; therefore, the abatement contractors and the client representative should discern between the estimated quantity above and future exploration of the property at the pre-bid walk-through to determine the final quantity during abatement procedures.

Table 2 – Non-Asbestos Containing Material Sample List

Sample #	Material Substance	Material Type (Surf/TSI/Misc)	Friable (Y or N)	Color	Floor	Location	Asbestos Content
19WM-02	Slate	Misc	N	Black	Ext	Around Entry	ND
19WM-03	Expansion Joint	Misc	N	White	Ext	Where Sidewalk Meets Entry	ND
19WM-06	Caulking	Misc	N	Gray	Ext	Around Window Trim	ND

Material Type – Surf=Surfacing, TSI=Thermal System Insulation, Misc=Miscellaneous / **Asbestos Content** – ND=None Detected
B=Basement, R=Roof, Int=Interior, Ext=Exterior

6.0 CONCLUSIONS / RECOMMENDATIONS

The following conclusions and recommendations are summarized as follows:

- Asbestos was detected in four (4) of the bulk material samples collected from the façade of the building located at 19 West Main Street, Marshalltown, Iowa. ACM's include caulking(s), plaster and slate adhesive. Based on the results of the data collected during the assessment, the façade of the building requires further action prior to renovation.

Impact7G recommends the abatement of all ACM containing components located within the inspection area if those building materials are to be disturbed during any future renovation/demolition activities. All abatement work shall be completed in accordance with local, state, and federal regulations. A visual inspection is recommended upon completion of abatement work to document that all ACMs within the scope of abatement have been removed.

7.0 CONDITIONS & LIMITATIONS

The Iowa Department of Natural Resources' (IDNR) Air Quality Bureau and Occupational Safety and Health Bureau (OSHA) of the Iowa Division of Labor Services require notification of any renovation/demolition activities in non-residential projects if the combined regulated ACM meets or exceeds any of the following thresholds: 160 square feet of surfacing ACM, 260 linear feet of TSI, or 35 cubic feet of ACM debris.

Impact7G has performed the tasks contained within this report in a thorough and professional manner consistent with commonly accepted standard industry practices. The results, findings, conclusions and recommendations expressed in this report are based on conditions observed during our survey of the property. Impact7G cannot guarantee, and does not warrant, that this report has identified all adverse environmental factors and/or conditions affecting the subject property. This report is not a bidding document or project specification as it does not contain the necessary components. Impact7G cannot warrant the work of any third party that may have aided in the completion of this report. This report has been prepared on behalf of and exclusively for use by the City of Marshalltown for specific application to their project as discussed. Contractors, consultants or other third parties reviewing this report must draw their own conclusions regarding data contained within the report, further investigation or required remediation.

APPENDIX A

Qualifications

AARON HEUSS

DOB: 06-25-1982

Issued: 04-19-2022

This person is licensed to perform asbestos work in the State of Iowa. ID card is intended for official use only and must be present on jobsite.

License Type	Number	Expires
INSPECTOR	22-8210	02-22-2023
SUPERVISOR	22-8211	02-23-2023

DIVISION OF IOWA LABOR

Asbestos

Rod A. Roberts

Rod A. Roberts
Labor Commissioner

APPENDIX B

Laboratory Reports &
Chain of Custody Documentation

EMSL Analytical, Inc.
6340 CastlePlace Dr. Indianapolis, IN 46250
Tel/Fax: (317) 803-2997 / (317) 803-3047
http://www.EMSL.com / indianapolislab@emsl.com

EMSL Order: 162211297
Customer ID: IMPA25
Customer PO:
Project ID:

Attention: Kim Crosser
Impact7G
8951 Windsor Parkway
Johnston, IA 50131

Phone: (515) 460-1124
Fax: (515) 528-8005
Received Date: 05/23/2022 9:20 AM
Analysis Date: 05/24/2022
Collected Date:

Project: CITY OF MARSHALLTOWN - 19 WEST MAIN

Test Report: Asbestos Analysis of Bulk Materials via EPA 600/R-93/116 Method using Polarized Light Microscopy

			Non-Asbestos		Asbestos
Sample	**Description**	**Appearance**	**% Fibrous**	**% Non-Fibrous**	**% Type**
19-01 *162211297-0001*	CAULKING WHITE EXT - AROUND ENTRY	White Non-Fibrous Homogeneous		97.0% Non-fibrous (Other)	**3% Chrysotile**
19-02 *162211297-0002*	SLATE BLACK EXT - AROUND ENTRY	Black Non-Fibrous Homogeneous		100.0% Non-fibrous (Other)	**None Detected**
19-03 *162211297-0003*	EXPANSION JOINT WHITE EXT - WHERE SIDEWALK MEETS ENTRY	White Non-Fibrous Homogeneous		100.0% Non-fibrous (Other)	**None Detected**
19-04 *162211297-0004*	PLASTER WHITE EXT - SOFFIT	Gray Non-Fibrous Homogeneous		100.0% Non-fibrous (Other)	**<1% Chrysotile**
19-05 *162211297-0005*	CAULKING WHITE EXT - WHERE WALL MEETS WINDOW	White Non-Fibrous Homogeneous		98.0% Non-fibrous (Other)	**2% Chrysotile**
19-06 *162211297-0006*	CAULKING GRAY EXT - AROUND WINDOW TRIM	Gray Non-Fibrous Homogeneous		100.0% Non-fibrous (Other)	**None Detected**
19-07 *162211297-0007*	SLATE ADHESIVE BLACK EXT - BEHIND SLATE	Gray/Black Non-Fibrous Homogeneous		90.0% Non-fibrous (Other)	**10% Chrysotile**

EMSL maintains liability limited to cost of analysis. Interpretation and use of test results are the responsibility of the client. This report relates only to the samples reported above, and may not be reproduced, except in full, without written approval by EMSL. EMSL bears no responsibility for sample collection activities or analytical method limitations. The report reflects the samples as received. Results are generated from the field sampling data (sampling volumes and areas, locations, etc.) provided by the client on the Chain of Custody. Samples are within quality control criteria and met method specifications unless otherwise noted. The above analyses were performed in general compliance with Appendix E to Subpart E of 40 CFR (previously EPA 600/M4-82-020 "Interim Method") but augmented with procedures outlined in the 1993 ("final") version of the method. This report must not be used by the client to claim product certification, approval, or endorsement by NVLAP, NIST or any agency of the federal government. Non-friable organically bound materials present a problem matrix and therefore EMSL recommends gravimetric reduction prior to analysis. Unless requested by the client, building materials manufactured with multiple layers (i.e. linoleum, wallboard, etc.) are reported as a single sample. Estimation of uncertainty is available on request.

Samples analyzed by EMSL Analytical, Inc. Indianapolis, IN NVLAP Lab Code 200188-0, AZ0939, CA 2575, CO AL-15132, TX 300262

EMSL Analytical, Inc.
6340 CastlePlace Dr. Indianapolis, IN 46250
Tel/Fax: (317) 803-2997 / (317) 803-3047
http://www.EMSL.com / indianapolislab@emsl.com

EMSL Order: 162211297
Customer ID: IMPA25
Customer PO:
Project ID:

Attention: Kim Crosser
Impact7G
8951 Windsor Parkway
Johnston, IA 50131

Phone: (515) 460-1124
Fax: (515) 528-8005
Received Date: 05/23/2022 9:20 AM
Analysis Date: 05/24/2022
Collected Date:

Project: CITY OF MARSHALLTOWN - 19 WEST MAIN

The samples in this report were submitted to EMSL for analysis by Asbestos Analysis of Bulk materials via EPA/600 (0513) Method using Polarized Light Microscopy. The reference number for these samples is the EMSL Order ID above. Please use this reference number when calling about these samples.

Report Comments:

Sample Receipt Date:	05/23/2022	Sample Receipt Time:	9:20 AM
Analysis Completed Date:	05/24/2022	Analysis Completed Time:	10:53 AM

Analyst(s):

Alison Pacey PLM (7)

Samples Reviewed and approved by:

Asbestos Laboratory Manager
or other approved signatory

EMSL maintains liability limited to cost of analysis. Interpretation and use of test results are the responsibility of the client. This report relates only to the samples reported above, and may not be reproduced, except in full, without written approval by EMSL. EMSL bears no responsibility for sample collection activities or analytical method limitations. The report reflects the samples as received. Results are generated from the field sampling data (sampling volumes and areas, locations, etc.) provided by the client on the Chain of Custody. Samples are within quality control criteria and met method specifications unless otherwise noted. The above analyses were performed in general compliance with Appendix E to Subpart E of 40 CFR (previously EPA 600/M4-82-020 "Interim Method") but augmented with procedures outlined in the 1993 ("final") version of the method. This report must not be used by the client to claim product certification, approval, or endorsement by NVLAP, NIST or any agency of the federal government. Non-friable organically bound materials present a problem matrix and therefore EMSL recommends gravimetric reduction prior to analysis. Unless requested by the client, building materials manufactured with multiple layers (i.e. linoleum, wallboard, etc.) are reported as a single sample. Estimation of uncertainty is available on request.

Samples analyzed by EMSL Analytical, Inc. Indianapolis, IN NVLAP Lab Code 200188-0, AZ0939, CA 2575, CO AL-15132, TX 300262

OrderID: 162211297

Ship Date:

EMSL ANALYTICAL, INC.
LABORATORY • PRODUCTS • TRAINING

Asbestos Chain of Custody EMSL Order Number
(Lab Use Only)

162211297

6340 Castleplace Dr.
Indianapolis, IN 46250
Phone: (317)803-2997
Fax: (317)803-3047

Company: IMPACT7G		☑ EMSL – Bill to: Same *Third Party Billing requires written authorization from third party.*	
Street: 8951 Windsor Parkway			
City: Johnston	State: IA	Zip Code: 50131	Country: USA
Report To: Kim Crosser		Phone: 515-685-2299	Fax: 515-685-2236
Email Address: kcrosser@impact7g.com		Please Provide results: EMAIL	
Project Name: City of Marshalltown - 19 West Main			
US State Samples Taken: IA			

Turnaround Time (TAT) Options

☐ 3-Hour ☐ 6-Hour ☑ 24-Hour ☐ 32-Hour ☐ 48 -Hour ☐ 72-Hour ☐ 1 Week ☐ 2 Week

**For TEM Air 3 hr through 6 hr, please call ahead to schedule. *There is a premium charge for 3 hr TEM AHERA or EPA Level II TAT. You will be asked to sign an authorization form for this service. Analysis completed in accordance with EMSL's Terms and Conditions located in the Analytic Price Guide*

PLM – BULK (reporting limit)
☑ PLM EPA 600/R-93/116 (<1%)

TEM – Air ☐ 4-4.5hr TAT (AHERA only)
☐ AHERA 40 CFR, Part 763

Sampler Names: Aaron Heuss

Sampler Signature:

☐ Check for Positive Stop – Clearly Identify Homogeneous Group

Filter Pore Size (Air Samples): ☐0.8 µm ☐0.45 µm

Sample ID	Sample Material/Description	Color	Floor	Location	Sample Date
19-01	Caulking	White	Ext	Around Entry	
19-02	Slate	Black	Ext	Around Entry	
19-03	Expansion Joint	White	Ext	Where Sidewalk Meets Entry	
19-04	Plaster	White	Ext	Soffit	
19-05	Caulking	white	Ext	Where Wall Meets Window	
19-06	Caulking	Gray	Ext	Around Window Trim	
19-07	Slate Adhesive	Black	Ext	Behind Slate	

Client Sample # (s):	19-01- 19-07			Total #:	7
Relinquished (Client):	Aaron Heuss	Date:	5/19/2022	Time:	
Received (Lab):		Date:	5/23/22	Time:	920
Comments/Special Instructions:	PLEASE SAMPLE ALL LAYERS, ADHESIVES, TEXTURES, ETC. Thanks!				

APPENDIX C

Photographs

Photograph table includes photos of all asbestos-containing materials.

5/19/22 **Photographer:** **Aaron Heuss**	**Asbestos Containing Materials Inspection** **19 West Main Street** **Marshalltown, Iowa**
Photo #1 **Description:** ACM White Caulking **Location:** Exterior, Around Entry **Sample** 19WM-01	
Photo #2 **Description:** ACM Gray Plaster **Location:** Exterior, Soffit **Sample** 19WM-04	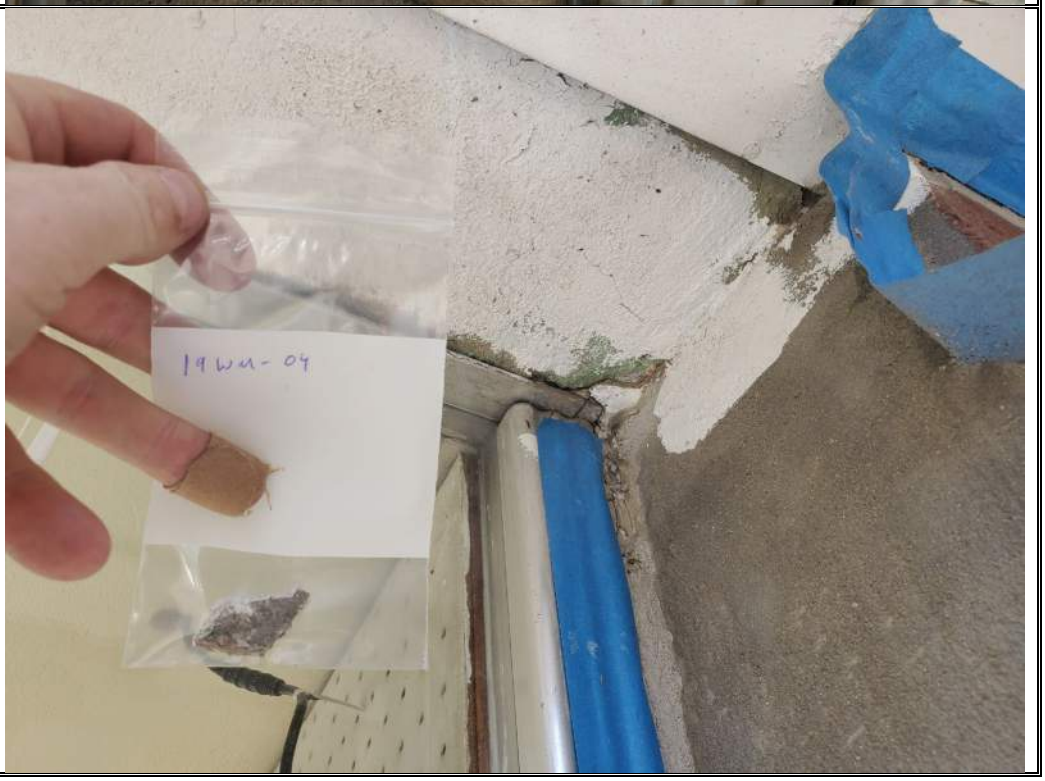

Photograph table includes photos of all asbestos-containing materials.

5/19/22 **Photographer:** **Aaron Heuss**	**Asbestos Containing Materials Inspection** **19 West Main Street** **Marshalltown, Iowa**
Photo #1 **Description:** ACM White Caulking **Location:** Exterior, Where Wall Meets Window **Sample** 19WM-05	
Photo #2 **Description:** ACM Gray/Black Slate Adhesive **Location:** Exterior, Behind Slate **Sample** 19WM-07	

LIMITED ASBESTOS CONTAINING MATERIALS INSPECTION

Commercial Property
21 West Main Street
Marshalltown, Iowa

Prepared for:

City of Marshalltown
36 N Center Street
Marshalltown, Iowa 50158

Prepared by:

IMPACT7G

8951 Windsor Parkway
Johnston, Iowa 50131

May 24, 2022

LIMITED ASBESTOS CONTAINING MATERIALS INSPECTION

Commercial Property
21 West Main Street
Marshalltown, Iowa

Inspected and Prepared by:

Aaron Heuss
Environmental Specialist I
Iowa Certified Asbestos Inspector: 22-8210I

Prepared and Reviewed by:

Kim Crosser - Harms
Sr. Project Manager
Iowa Certified Asbestos Inspector: 22-8148I

TABLE OF CONTENTS

1.0 EXECUTIVE SUMMARY 1
2.0 INTRODUCTION 2
3.0 PROPERTY DESCRIPTION 3
4.0 INSPECTION LIMITATIONS 3
5.0 INSPECTION ACTIVITIES 3
6.0 CONCLUSIONS / RECOMMENDATIONS 5
7.0 CONDITIONS & LIMITATIONS 5

LIST OF TABLES

Table 1 – Non-Asbestos Containing Material Sample List

APPENDICES

APPENDIX A - Qualifications
APPENDIX B - Laboratory Reports & Chain of Custody Documentation

1.0 EXECUTIVE SUMMARY

Impact7G, Inc. (Impact7G), completed a Limited Asbestos Containing Materials (ACM) Inspection on May 19, 2022 of the façade of the building located at 21 West Main Street, Marshalltown, Iowa (Property). The purpose of this Limited ACM Inspection is to document the presence of asbestos containing materials and assist the City of Marshalltown (Client) in facilitating renovation activities of the facade.

Asbestos was not detected in any of the seventeen (17) samples collected from various building components within the Property's façade. See Table 1 for additional information.

Based on these results, the Property's façade does not require any further action prior to any renovation activities.

2.0 INTRODUCTION

A. Property Information

Location:

Commercial Property
21 West Main Street
Marshalltown, Iowa 50158

Contact Person:

City of Marshalltown
Deb Millizer
36 N Center Street
Marshalltown, Iowa 50158

B. Personnel

Sr. Project Manager: Kim Crosser-Harms	State of Iowa License	22-8148I
Inspector: Aaron Heuss	State of Iowa License	22-8210I

C. Sampling Plan

According to the Client, the scope of this Limited ACM Inspection includes the façade of the building.

This Limited ACM Inspection is in accordance with OSHA Regulation 1926.1101. All samples collected in the field were sent to EMSL, an NVLAP certified laboratory for analysis. The samples were analyzed via the polarized light microscopy (PLM) method for asbestos content. If requested by Client, samples were further analyzed via the transmission electron microscopy (TEM) method or PLM 400 Point Count analysis method.

D. Regulation Review

The U.S. EPA qualifies asbestos containing materials (ACM) as materials with an asbestos content greater than 1%. According to Iowa OSHA, ACM is any material found to contain asbestos, regardless of its concentration, and shall be regulated as hazardous waste. The following definitions are taken from Section 61.141 of Subpart M, Part 61 of Title 40: Protection of Environment of the Code of Federal Regulations (CFR).

- "Category I nonfriable asbestos-containing material (ACM)" is defined as asbestos-containing packings, gaskets, resilient floor covering, and asphalt roofing products containing more than 1% asbestos as determined using the method specified in appendix E, subpart E, 40 CFR part 763, section 1, Polarized Light Microscopy (PLM).
- "Category II nonfriable ACM" is defined as any material, excluding Category I nonfriable ACM, containing more than 1% asbestos as determined using the methods specified in appendix E, subpart E, 40 CFR part 763, section 1, PLM that, when dry, ***cannot*** be crumbled, pulverized, or reduced to powder by hand pressure.
- "Friable asbestos material" is defined as any material containing more than 1% asbestos as determined using the methods specified in appendix E, subpart E, 40 CFR part 763, section 1, PLM that when dry, ***can*** be crumbled, pulverized, or

reduced to powder by hand pressure. If the asbestos content is less than 10% as determined by a method other than point counting by PLM, verify the asbestos content by point counting using PLM.

3.0 PROPERTY DESCRIPTION

The Property consists of a two-story brick shop that is currently being used as storage.

4.0 INSPECTION LIMITATIONS

An Inspection limitation, for the purpose of this report, is any action or task that is limited from the original scope work. The overall reason for any limitation is the protection of Impact7G personnel. Examples of limitations can range from a lack of accessibility to an area of the Property, unsafe work areas, collecting additional samples, etc.

- **Only the façade of the building was inspected.**

5.0 INSPECTION ACTIVITIES

Iowa certified asbestos inspectors from Impact7G collected 17 samples on May 19, 2022. The samples were collected from various accessible building components located throughout the façade. Upon completion of bulk sampling activities, samples were sent to EMSL, an NVLAP certified laboratory for analysis.

Materials that are “suspected” to contain asbestos are divided into the following three categories:

1. **Surfacing materials** are materials that are sprayed or troweled on for acoustical, decorative, or fireproofing purposes. Examples are textured ceilings or drywall, exterior stucco and structural steel fireproofing;

2. **Thermal System Insulation (TSI)** is insulation used to inhibit heat transfer from pipes, boilers, tanks, ducts, and various other components of hot and cold-water systems and HVAC systems. Examples are hard cementitious “mud” type insulation on pipe elbows and tees, pipe insulation runs and risers, boiler insulation, flues; and,

3. **Miscellaneous** materials are mostly non-friable products when maintained in good condition. Examples are resilient floor coverings including vinyl, linoleum and floor tile, mastics and adhesives, cement products, caulk, drywall, ceiling tile and roofing materials.

The following table show samples identified by the laboratory to be non-asbestos containing materials (NACM). The complete analytical results can be found in Appendix B.

Table 1 – Non-Asbestos Containing Material Sample List

Sample #	Material Substance	Material Type (Surf/TSI/Misc)	Friable (Y or N)	Color	Floor	Location	Asbestos Content
21WM-01	Caulking	Misc	N	Black	Ext	Around Marble	ND
21WM-02	Grout	Misc	N	Black	Ext	Joints on the Marble	ND
21WM-03	Tile Grout	Misc	N	Gray	Ext	Floor Tile Entrance	ND
21WM-04	Ceramic Tile	Misc	N	Teal	Ext	Floor Tile Entrance	ND
21WM-05	Caulking	Misc	N	White	Ext	On Brick Patch	ND
21WM-06	Caulking	Misc	N	Black	Ext	Around Windows and Door	ND
21WM-07	Plaster	Misc	Y	Gray	Ext	Soffit	ND
21WM-08	Caulking	Misc	N	White	1	On Old Overhang	ND
21WM-09	Ceiling Tile	Misc	N	White	1	Entrance Up to Door	ND
21WM-10	Window Glaze	Misc	N	White	2	Upstairs Windows	ND
21WM-11	Caulking	Misc	N	White	2	In Between Window and Storm Door	ND
21WM-12ABC	Plaster	Misc	Y	Gray	2	Walls Around Windows	ND
21WM-13ABC	Skim Coat	Surf	Y	White	2	Walls Around Windows	ND

Material Type – Surf=Surfacing, TSI=Thermal System Insulation, Misc=Miscellaneous / **Asbestos Content** – ND=None Detected
B=Basement, R=Roof, Int=Interior, Ext=Exterior

6.0 CONCLUSIONS / RECOMMENDATIONS

The following conclusions and recommendations are summarized as follows:

- Asbestos was not detected in any of the bulk material samples collected from the façade of the building located at 21 West Main Street, Marshalltown, Iowa. Based on the results of the data collected during the assessment, the façade of the building requires no further action prior to renovation.

7.0 CONDITIONS & LIMITATIONS

The Iowa Department of Natural Resources' (IDNR) Air Quality Bureau and Occupational Safety and Health Bureau (OSHA) of the Iowa Division of Labor Services require notification of any renovation/demolition activities in non-residential projects if the combined regulated ACM meets or exceeds any of the following thresholds: 160 square feet of surfacing ACM, 260 linear feet of TSI, or 35 cubic feet of ACM debris.

Impact7G has performed the tasks contained within this report in a thorough and professional manner consistent with commonly accepted standard industry practices. The results, findings, conclusions and recommendations expressed in this report are based on conditions observed during our survey of the property. Impact7G cannot guarantee, and does not warrant, that this report has identified all adverse environmental factors and/or conditions affecting the subject property. <u>This report is not a bidding document or project specification as it does not contain the necessary components</u>. Impact7G cannot warrant the work of any third party that may have aided in the completion of this report. This report has been prepared on behalf of and exclusively for use by the City of Marshalltown for specific application to their project as discussed. Contractors, consultants or other third parties reviewing this report must draw their own conclusions regarding data contained within the report, further investigation or required remediation.

APPENDIX A

Qualifications

AARON HEUSS

DOB: 06-25-1982

Issued: 04-19-2022

This person is licensed to perform asbestos work in the State of Iowa. ID card is intended for official use only and must be present on jobsite.

License Type	Number	Expires
INSPECTOR	22-8210	02-22-2023
SUPERVISOR	22-8211	02-23-2023

DIVISION OF IOWA LABOR

Asbestos

Rod A. Roberts

Rod A. Roberts
Labor Commissioner

APPENDIX B

Laboratory Reports &
Chain of Custody Documentation

EMSL Analytical, Inc.
6340 CastlePlace Dr. Indianapolis, IN 46250
Tel/Fax: (317) 803-2997 / (317) 803-3047
http://www.EMSL.com / indianapolislab@emsl.com

EMSL Order: 162211277
Customer ID: IMPA25
Customer PO:
Project ID:

Attention: Kim Crosser
Impact7G
8951 Windsor Parkway
Johnston, IA 50131

Phone: (515) 460-1124
Fax: (515) 528-8005
Received Date: 05/23/2022 9:20 AM
Analysis Date: 05/24/2022
Collected Date: 05/19/2022

Project: CITY OF MARSHALLTOWN - 21 WEST MAIN

Test Report: Asbestos Analysis of Bulk Materials via EPA 600/R-93/116 Method using Polarized Light Microscopy

			Non-Asbestos		Asbestos
Sample	**Description**	**Appearance**	**% Fibrous**	**% Non-Fibrous**	**% Type**
21-01 *162211277-0001*	CAULKING BLACK EXT-AROUND MARBLE	Black Non-Fibrous Homogeneous		100.0% Non-fibrous (Other)	**None Detected**
21-02 *162211277-0002*	GROUT BLACK EXT-JOINS ON THE MARBLE	Black Non-Fibrous Homogeneous		20% Quartz 80.0% Non-fibrous (Other)	**None Detected**
21-03 *162211277-0003*	TILE GROUT GRAY EXT-FLOOR TILE ENTRANCE	Gray Non-Fibrous Homogeneous		20% Quartz 80.0% Non-fibrous (Other)	**None Detected**
21-04 *162211277-0004*	CERAMIC TILE TEAL EXT-FLOOR TILE ENTRANCE	Green Non-Fibrous Homogeneous		100.0% Non-fibrous (Other)	**None Detected**
21-05 *162211277-0005*	CAULKING WHITE EXT-ON BRICK PATCH	White Non-Fibrous Homogeneous		100.0% Non-fibrous (Other)	**None Detected**
21-06 *162211277-0006*	CAULKING BLACK EXT-AROUND WINDOWS AND DOOR	Black Non-Fibrous Homogeneous		100.0% Non-fibrous (Other)	**None Detected**
21-07 *162211277-0007*	PLASTER GRAY EXT-SOFFIT	Gray/White Non-Fibrous Homogeneous		20% Quartz 80.0% Non-fibrous (Other)	**None Detected**
21-08 *162211277-0008*	CAULKING WHITE1-ON OLD OVERHANG	Gray Non-Fibrous Homogeneous		100.0% Non-fibrous (Other)	**None Detected**
21-09 *162211277-0009*	CEILING TILE WHITE 1-ENTRANCE UP TO DOOR	Gray/White Fibrous Homogeneous	95% MinWool	5.0% Non-fibrous (Other)	**None Detected**

EMSL maintains liability limited to cost of analysis. Interpretation and use of test results are the responsibility of the client. This report relates only to the samples reported above, and may not be reproduced, except in full, without written approval by EMSL. EMSL bears no responsibility for sample collection activities or analytical method limitations. The report reflects the samples as received. Results are generated from the field sampling data (sampling volumes and areas, locations, etc.) provided by the client on the Chain of Custody. Samples are within quality control criteria and met method specifications unless otherwise noted. The above analyses were performed in general compliance with Appendix E to Subpart E of 40 CFR (previously EPA 600/M4-82-020 "Interim Method") but augmented with procedures outlined in the 1993 ("final") version of the method. This report must not be used by the client to claim product certification, approval, or endorsement by NVLAP, NIST or any agency of the federal government. Non-friable organically bound materials present a problem matrix and therefore EMSL recommends gravimetric reduction prior to analysis. Unless requested by the client, building materials manufactured with multiple layers (i.e. linoleum, wallboard, etc.) are reported as a single sample. Estimation of uncertainty is available on request.

Samples analyzed by EMSL Analytical, Inc. Indianapolis, IN NVLAP Lab Code 200188-0, AZ0939, CA 2575, CO AL-15132, TX 300262

EMSL Analytical, Inc.
6340 CastlePlace Dr. Indianapolis, IN 46250
Tel/Fax: (317) 803-2997 / (317) 803-3047
http://www.EMSL.com / indianapolislab@emsl.com

EMSL Order: 162211277
Customer ID: IMPA25
Customer PO:
Project ID:

Attention: Kim Crosser
Impact7G
8951 Windsor Parkway
Johnston, IA 50131

Phone: (515) 460-1124
Fax: (515) 528-8005
Received Date: 05/23/2022 9:20 AM
Analysis Date: 05/24/2022
Collected Date: 05/19/2022

Project: CITY OF MARSHALLTOWN - 21 WEST MAIN

Test Report: Asbestos Analysis of Bulk Materials via EPA 600/R-93/116 Method using Polarized Light Microscopy

			Non-Asbestos		Asbestos
Sample	**Description**	**Appearance**	**% Fibrous**	**% Non-Fibrous**	**% Type**
21-10 *162211277-0010*	WINDOW GLAZE WHITE 2-UPSTAIRS WINDOWS	Gray/White Non-Fibrous Homogeneous		100.0% Non-fibrous (Other)	**None Detected**
21-11 *162211277-0011*	CAULKING WHITE 2-IN BETWEEN WINDOW AND STORM DOOR	Gray/White Non-Fibrous Homogeneous		100.0% Non-fibrous (Other)	**None Detected**
21-12A *162211277-0012*	PLASTER GRAY 2-WALLS AROUND WINDOWS	Gray Non-Fibrous Homogeneous		20% Quartz 80.0% Non-fibrous (Other)	**None Detected**
21-12B *162211277-0013*	PLASTER GRAY 2-WALLS AROUND WINDOWS	Gray Non-Fibrous Homogeneous		20% Quartz 80.0% Non-fibrous (Other)	**None Detected**
21-12C *162211277-0014*	PLASTER GRAY 2-WALLS AROUND WINDOWS	Gray Non-Fibrous Homogeneous		20% Quartz 80.0% Non-fibrous (Other)	**None Detected**
21-13A *162211277-0015*	SKIM COAT WHITE 2-WALLS AROUND WINDOWS	White Non-Fibrous Homogeneous		100.0% Non-fibrous (Other)	**None Detected**
21-13B *162211277-0016*	SKIM COAT WHITE 2-WALLS AROUND WINDOWS	White Non-Fibrous Homogeneous		100.0% Non-fibrous (Other)	**None Detected**
21-13C *162211277-0017*	SKIM COAT WHITE 2-WALLS AROUND WINDOWS	White Non-Fibrous Homogeneous		100.0% Non-fibrous (Other)	**None Detected**

EMSL maintains liability limited to cost of analysis. Interpretation and use of test results are the responsibility of the client. This report relates only to the samples reported above, and may not be reproduced, except in full, without written approval by EMSL. EMSL bears no responsibility for sample collection activities or analytical method limitations. The report reflects the samples as received. Results are generated from the field sampling data (sampling volumes and areas, locations, etc.) provided by the client on the Chain of Custody. Samples are within quality control criteria and met method specifications unless otherwise noted. The above analyses were performed in general compliance with Appendix E to Subpart E of 40 CFR (previously EPA 600/M4-82-020 "Interim Method") but augmented with procedures outlined in the 1993 ("final") version of the method. This report must not be used by the client to claim product certification, approval, or endorsement by NVLAP, NIST or any agency of the federal government. Non-friable organically bound materials present a problem matrix and therefore EMSL recommends gravimetric reduction prior to analysis. Unless requested by the client, building materials manufactured with multiple layers (i.e. linoleum, wallboard, etc.) are reported as a single sample. Estimation of uncertainty is available on request.

Samples analyzed by EMSL Analytical, Inc. Indianapolis, IN NVLAP Lab Code 200188-0, AZ0939, CA 2575, CO AL-15132, TX 300262

EMSL Analytical, Inc.
6340 CastlePlace Dr. Indianapolis, IN 46250
Tel/Fax: (317) 803-2997 / (317) 803-3047
http://www.EMSL.com / indianapolislab@emsl.com

EMSL Order: 162211277
Customer ID: IMPA25
Customer PO:
Project ID:

Attention: Kim Crosser
Impact7G
8951 Windsor Parkway
Johnston, IA 50131

Project: CITY OF MARSHALLTOWN - 21 WEST MAIN

Phone: (515) 460-1124
Fax: (515) 528-8005
Received Date: 05/23/2022 9:20 AM
Analysis Date: 05/24/2022
Collected Date: 05/19/2022

The samples in this report were submitted to EMSL for analysis by Asbestos Analysis of Bulk materials via EPA/600 (0513) Method using Polarized Light Microscopy. The reference number for these samples is the EMSL Order ID above. Please use this reference number when calling about these samples.

Report Comments:

Sample Receipt Date:	05/23/2022	Sample Receipt Time:	9:20 AM
Analysis Completed Date:	05/24/2022	Analysis Completed Time:	9:51 AM

Analyst(s):

Maggie Hayden PLM (17)

Samples Reviewed and approved by:

Asbestos Laboratory Manager
or other approved signatory

EMSL maintains liability limited to cost of analysis. Interpretation and use of test results are the responsibility of the client. This report relates only to the samples reported above, and may not be reproduced, except in full, without written approval by EMSL. EMSL bears no responsibility for sample collection activities or analytical method limitations. The report reflects the samples as received. Results are generated from the field sampling data (sampling volumes and areas, locations, etc.) provided by the client on the Chain of Custody. Samples are within quality control criteria and met method specifications unless otherwise noted. The above analyses were performed in general compliance with Appendix E to Subpart E of 40 CFR (previously EPA 600/M4-82-020 "Interim Method") but augmented with procedures outlined in the 1993 ("final") version of the method. This report must not be used by the client to claim product certification, approval, or endorsement by NVLAP, NIST or any agency of the federal government. Non-friable organically bound materials present a problem matrix and therefore EMSL recommends gravimetric reduction prior to analysis. Unless requested by the client, building materials manufactured with multiple layers (i.e. linoleum, wallboard, etc.) are reported as a single sample. Estimation of uncertainty is available on request.

Samples analyzed by EMSL Analytical, Inc. Indianapolis, IN NVLAP Lab Code 200188-0, AZ0939, CA 2575, CO AL-15132, TX 300262

OrderID: 162211277

Ship Date:

EMSL ANALYTICAL, INC.
LABORATORY • PRODUCTS • TRAINING

Asbestos Chain of Custody EMSL Order Number
(Lab Use Only)

162211277

6340 Castleplace Dr.
Indianapolis, IN 46250
Phone: (317)803-2997
Fax: (317)803-3047

Company: IMPACT7G		☑ EMSL – Bill to: Same *Third Party Billing requires written authorization from third party*	
Street: 8951 Windsor Parkway			
City: Johnston	State: IA	Zip Code: 50131	Country: USA
Report To: Kim Crosser		Phone: 515-685-2299	Fax: 515-685-2236
Email Address: kcrosser@impact7g.com		Please Provide results: EMAIL	
Project Name: City of Marshalltown - 21 West Main			
US State Samples Taken: IA			

Turnaround Time (TAT) Options

☐ 3-Hour ☐ 6-Hour ☑ 24-Hour ☐ 32-Hour ☐ 48 -Hour ☐ 72-Hour ☐ 1 Week ☐ 2 Week

**For TEM Air 3 hr through 6 hr, please call ahead to schedule *There is a premium charge for 3 hr TEM AHERA or EPA Level II TAT. You will be asked to sign on authorization form for this service. Analysis completed in accordance with EMSL's Terms and Conditions located in the Analytic Price Guide.*

PLM – BULK (reporting limit)
☑ PLM EPA 600/R-93/116 (<1%)

TEM – Air ☐ 4-4.5hr TAT (AHERA only)
☐ AHERA 40 CFR, Part 763

Sampler Names: Aaron Heuss
Sampler Signature:

☐ Check for Positive Stop – Clearly Identify Homogeneous Group
Filter Pore Size (Air Samples): ☐0.8 µm ☐0.45 µm

Sample ID	Sample Material/Description	Color	Floor	Location	Sample Date
21-01	Caulking	Black	Ext	Around Marble	
21-02	Grout	Black	Ext	Joins on the Marble	
21-03	Tile Grout	Gray	Ext	Floor Tile Entrance	
21-04	Ceramic Tile	Teal	Ext	Floor Tile Entrance	
21-05	Caulking	White	Ext	On Brick Patch	
21-06	Caulking	Black	Ext	Around Windows and Door	
21-07	Plaster	Gray	Ext	Soffit	
21-08	Caulking	White	1	On Old Overhang	
21-09	Ceiling Tile	White	1	Entrance Up to Door	
21-10	Window Glaze	White	2	Upstairs Windows	
21-11	Caulking	White	2	In Between Window and Storm Door	
21-12ABC	Plaster	Gray	2	Walls Around Windows	
21-13ABC	Skim Coat	White	2	Walls Around Windows	

Client Sample # (s):	21-01 - 21-13C			Total #:	17
Relinquished (Client):	Aaron Heuss	Date:	5/19/2022	Time:	
Received (Lab):		Date:	5/23/22	Time:	9:20 AM
Comments/Special Instructions:	PLEASE SAMPLE ALL LAYERS, ADHESIVES, TEXTURES, ETC. Thanks!				

LIMITED ASBESTOS CONTAINING MATERIALS INSPECTION

Commercial Property
23 West Main Street
Marshalltown, Iowa

Prepared for:

City of Marshalltown
36 N Center Street
Marshalltown, Iowa 50158

Prepared by:

8951 Windsor Parkway
Johnston, Iowa 50131

May 24, 2022

LIMITED ASBESTOS CONTAINING MATERIALS INSPECTION

Commercial Property
23 West Main Street
Marshalltown, Iowa

Inspected and Prepared by:

Aaron Heuss
Environmental Specialist I
Iowa Certified Asbestos Inspector: 22-8210I

Prepared and Reviewed by:

Kim Crosser - Harms
Sr. Project Manager
Iowa Certified Asbestos Inspector: 22-8148I

TABLE OF CONTENTS

1.0 EXECUTIVE SUMMARY 1
2.0 INTRODUCTION 2
3.0 PROPERTY DESCRIPTION 3
4.0 INSPECTION LIMITATIONS 3
5.0 INSPECTION ACTIVITIES 3
6.0 CONCLUSIONS / RECOMMENDATIONS 6
7.0 CONDITIONS & LIMITATIONS 6

LIST OF TABLES

Table 1 – Asbestos Containing Material Sample List
Table 2 – Non-Asbestos Containing Material Sample List

APPENDICES

APPENDIX A - Qualifications
APPENDIX B - Laboratory Reports & Chain of Custody Documentation
APPENDIX C - Photographs

1.0 EXECUTIVE SUMMARY

Impact7G, Inc. (Impact7G), completed a Limited Asbestos Containing Materials (ACM) Inspection on May 19, 2022 of the façade of the building located at 23 West Main Street, Marshalltown, Iowa (Property). The purpose of this Limited ACM Inspection is to document the presence of asbestos containing materials and assist the City of Marshalltown (Client) in facilitating renovation activities of the facade.

Asbestos was detected in two (2) of the eleven (11) samples collected from various building components within the Property's facade. See Table 1 for additional information. ACMs include:

- Caulking(s)

All building materials similar in appearance, color, and/or texture to those determined to contain asbestos must be assumed to contain asbestos throughout this building.

Based on these results, the Property's façade requires further action prior to any renovation activities.

2.0 INTRODUCTION

A. Property Information

Location:

Commercial Property
23 West Main Street
Marshalltown, Iowa 50158

Contact Person:

City of Marshalltown
Deb Millizer
36 N Center Street
Marshalltown, Iowa 50158

B. Personnel

Sr. Project Manager: Kim Crosser-Harms	State of Iowa License	22-8148I
Inspector: Aaron Heuss	State of Iowa License	22-8210I

C. Sampling Plan

According to the Client, the scope of this Limited ACM Inspection includes the façade of the building.

This Limited ACM Inspection is in accordance with OSHA Regulation 1926.1101. All samples collected in the field were sent to EMSL, an NVLAP certified laboratory for analysis. The samples were analyzed via the polarized light microscopy (PLM) method for asbestos content. If requested by Client, samples were further analyzed via the transmission electron microscopy (TEM) method or PLM 400 Point Count analysis method.

D. Regulation Review

The U.S. EPA qualifies asbestos containing materials (ACM) as materials with an asbestos content greater than 1%. According to Iowa OSHA, ACM is any material found to contain asbestos, regardless of its concentration, and shall be regulated as hazardous waste. The following definitions are taken from Section 61.141 of Subpart M, Part 61 of Title 40: Protection of Environment of the Code of Federal Regulations (CFR).

- "Category I nonfriable asbestos-containing material (ACM)" is defined as asbestos-containing packings, gaskets, resilient floor covering, and asphalt roofing products containing more than 1% asbestos as determined using the method specified in appendix E, subpart E, 40 CFR part 763, section 1, Polarized Light Microscopy (PLM).
- "Category II nonfriable ACM" is defined as any material, excluding Category I nonfriable ACM, containing more than 1% asbestos as determined using the methods specified in appendix E, subpart E, 40 CFR part 763, section 1, PLM that, when dry, ***cannot*** be crumbled, pulverized, or reduced to powder by hand pressure.
- "Friable asbestos material" is defined as any material containing more than 1% asbestos as determined using the methods specified in appendix E, subpart E, 40 CFR part 763, section 1, PLM that when dry, ***can*** be crumbled, pulverized, or

reduced to powder by hand pressure. If the asbestos content is less than 10% as determined by a method other than point counting by PLM, verify the asbestos content by point counting using PLM.

3.0 PROPERTY DESCRIPTION

The Property consists of 2-story Storage shop.

4.0 INSPECTION LIMITATIONS

An Inspection limitation, for the purpose of this report, is any action or task that is limited from the original scope work. The overall reason for any limitation is the protection of Impact7G personnel. Examples of limitations can range from a lack of accessibility to an area of the Property, unsafe work areas, collecting additional samples, etc.

- **Only the façade of the building was inspected.**

5.0 INSPECTION ACTIVITIES

Iowa certified asbestos inspectors from Impact7G collected 11 samples on May 19, 2022. The samples were collected from various accessible building components located throughout the façade. Upon completion of bulk sampling activities, samples were sent to EMSL, an NVLAP certified laboratory for analysis.

Materials that are “suspected” to contain asbestos are divided into the following three categories:

1. **Surfacing materials** are materials that are sprayed or troweled on for acoustical, decorative, or fireproofing purposes. Examples are textured ceilings or drywall, exterior stucco and structural steel fireproofing;

2. **Thermal System Insulation (TSI)** is insulation used to inhibit heat transfer from pipes, boilers, tanks, ducts, and various other components of hot and cold-water systems and HVAC systems. Examples are hard cementitious “mud” type insulation on pipe elbows and tees, pipe insulation runs and risers, boiler insulation, flues; and,

3. **Miscellaneous** materials are mostly non-friable products when maintained in good condition. Examples are resilient floor coverings including vinyl, linoleum and floor tile, mastics and adhesives, cement products, caulk, drywall, ceiling tile and roofing materials.

The following tables show samples positively identified by the laboratory to be asbestos containing materials (ACM) and samples that were analyzed as non-ACM. The complete analytical results can be found in Appendix B.

Table 1 – Non-Asbestos Containing Material Sample List

Sample #	Material Substance	Material Type (Surf/TSI/Misc)	Friable (Y or N)	Color	Floor	Location	Asbestos Content	Estimated Quantities
23WM-01	Caulking	Misc	N	White	Ext	Around Door to 2nd Floor	<1% Chrysotile	50 LF
23WM-02	Caulking	Misc	N	White	Ext	Behind Overhang	<1% Chrysotile	100 LF

Material Type – Surf=Surfacing, TSI=Thermal System Insulation, Misc=Miscellaneous / **Asbestos Content** – ND=None Detected
B=Basement, R=Roof, Int=Interior, Ext=Exterior

Three (3) bulk material samples were analyzed greater than 1% asbestos. One (1) of the remaining building material samples were detected with a concentration of <1% asbestos. ACMs include caulking(s), plaster and slate adhesive. If during demolition or renovation activities additional areas of identified ACM are discovered, they should be abated accordingly. Laboratory analytical reports are provided in Appendix B.

Though an asbestos abatement contractor is not required to remove materials containing 1% or less asbestos, these materials must be removed wet and promptly contained and disposed of in leak-tight containers. Materials containing 1% or less asbestos are not required to be disposed of at an approved landfill as asbestos waste material.

Employers of those engaging in the disturbance of 1% or less asbestos are required to provide their workers with Asbestos Awareness training of at least two hours prior to disturbance of said materials. Further, those removing materials containing 1% or less asbestos must maintain documentation proving that breathing zone exposures do not exceed either OSHA's permissible exposure limit or short-term excursion limit.

It is important to note that these are estimated quantities; therefore, the abatement contractors and the client representative should discern between the estimated quantity above and future exploration of the property at the pre-bid walk-through to determine the final quantity during abatement procedures.

Table 2 – Non-Asbestos Containing Material Sample List

Sample #	Material Substance	Material Type (Surf/TSI/Misc)	Friable (Y or N)	Color	Floor	Location	Asbestos Content
23WM-03	Caulking	Misc	N	Black	Ext	Around Main Windows	ND
23WM-04	Window Seal	Misc	N	Black	Ext	Around Main Windows	ND
23WM-05	Caulking	Misc	N	White	Ext	Around Soffits	ND
23WM-06ABC	Plaster	Misc	Y	Gray	2	Walls Around Window	ND
23WM-07ABC	Skim Coat	Surf	Y	White	2	Walls Around Window	ND

Material Type – Surf=Surfacing, TSI=Thermal System Insulation, Misc=Miscellaneous / **Asbestos Content** – ND=None Detected
B=Basement, R=Roof, Int=Interior, Ext=Exterior

6.0 CONCLUSIONS / RECOMMENDATIONS

The following conclusions and recommendations are summarized as follows:

- Asbestos was detected in two (2) of the bulk material samples collected from the façade of the building located at 23 West Main Street, Marshalltown, Iowa. ACM's include caulking(s). Based on the results of the data collected during the assessment, the façade of the building requires further action prior to renovation.

Impact7G recommends the abatement of all ACM containing components located within the inspection area if those building materials are to be disturbed during any future renovation/demolition activities. All abatement work shall be completed in accordance with local, state, and federal regulations. A visual inspection is recommended upon completion of abatement work to document that all ACMs within the scope of abatement have been removed.

7.0 CONDITIONS & LIMITATIONS

The Iowa Department of Natural Resources' (IDNR) Air Quality Bureau and Occupational Safety and Health Bureau (OSHA) of the Iowa Division of Labor Services require notification of any renovation/demolition activities in non-residential projects if the combined regulated ACM meets or exceeds any of the following thresholds: 160 square feet of surfacing ACM, 260 linear feet of TSI, or 35 cubic feet of ACM debris.

Impact7G has performed the tasks contained within this report in a thorough and professional manner consistent with commonly accepted standard industry practices. The results, findings, conclusions and recommendations expressed in this report are based on conditions observed during our survey of the property. Impact7G cannot guarantee, and does not warrant, that this report has identified all adverse environmental factors and/or conditions affecting the subject property. This report is not a bidding document or project specification as it does not contain the necessary components. Impact7G cannot warrant the work of any third party that may have aided in the completion of this report. This report has been prepared on behalf of and exclusively for use by the City of Marshalltown for specific application to their project as discussed. Contractors, consultants or other third parties reviewing this report must draw their own conclusions regarding data contained within the report, further investigation or required remediation.

APPENDIX A

Qualifications

AARON HEUSS

DOB: 06-25-1982

Issued: 04-19-2022

This person is licensed to perform asbestos work in the State of Iowa. ID card is intended for official use only and must be present on jobsite.

License Type	Number	Expires
INSPECTOR	22-8210	02-22-2023
SUPERVISOR	22-8211	02-23-2023

DIVISION OF IOWA LABOR

Asbestos

Rod A. Roberts

Rod A. Roberts
Labor Commissioner

APPENDIX B

Laboratory Reports &
Chain of Custody Documentation

EMSL Analytical, Inc.
6340 CastlePlace Dr. Indianapolis, IN 46250
Tel/Fax: (317) 803-2997 / (317) 803-3047
http://www.EMSL.com / indianapolislab@emsl.com

EMSL Order: 162211300
Customer ID: IMPA25
Customer PO:
Project ID:

Attention: Kim Crosser
Impact7G
8951 Windsor Parkway
Johnston, IA 50131

Project: CITY OF MARSHALLTOWN 23 WEST MAIN

Phone: (515) 460-1124
Fax: (515) 528-8005
Received Date: 05/23/2022 9:20 AM
Analysis Date: 05/24/2022
Collected Date:

Test Report: Asbestos Analysis of Bulk Materials via EPA 600/R-93/116 Method using Polarized Light Microscopy

			Non-Asbestos		Asbestos
Sample	**Description**	**Appearance**	**% Fibrous**	**% Non-Fibrous**	**% Type**
23-01 *162211300-0001*	CAULKING WHITE EXT - AROUND DOOR TO 2ND FLOOR	Gray/White Non-Fibrous Homogeneous		100.0% Non-fibrous (Other)	**<1% Chrysotile**
23-02 *162211300-0002*	CAULKING WHITE EXT - BEHIND OVERHANG	Gray/Tan Non-Fibrous Homogeneous		100.0% Non-fibrous (Other)	**<1% Chrysotile**
23-03 *162211300-0003*	CAULKING BLACK EXT - AROUND MAIN WINDOWS	Brown/Black Non-Fibrous Homogeneous		100.0% Non-fibrous (Other)	**None Detected**
23-04 *162211300-0004*	WINDOW SEAL BLACK EXT - AROUND MAIN WINDOWS	Black Non-Fibrous Homogeneous		100.0% Non-fibrous (Other)	**None Detected**
23-05 *162211300-0005*	CAULKING WHITE EXT - AROUND SOFFITS	White Non-Fibrous Homogeneous		100.0% Non-fibrous (Other)	**None Detected**
23-06A *162211300-0006*	PLASTER GRAY 2 - WALLS AROUND WINDOW	Gray Non-Fibrous Homogeneous		20% Quartz 80.0% Non-fibrous (Other)	**None Detected**
23-06B *162211300-0007*	PLASTER GRAY 2 - WALLS AROUND WINDOW	Gray Non-Fibrous Homogeneous		20% Quartz 80.0% Non-fibrous (Other)	**None Detected**
23-06C *162211300-0008*	PLASTER GRAY 2 - WALLS AROUND WINDOW	Gray Non-Fibrous Homogeneous		20% Quartz 80.0% Non-fibrous (Other)	**None Detected**
23-07A *162211300-0009*	SKIM COAT WHITE 2 - WALLS AROUND WINDOW	White Non-Fibrous Homogeneous		100.0% Non-fibrous (Other)	**None Detected**

EMSL maintains liability limited to cost of analysis. Interpretation and use of test results are the responsibility of the client. This report relates only to the samples reported above, and may not be reproduced, except in full, without written approval by EMSL. EMSL bears no responsibility for sample collection activities or analytical method limitations. The report reflects the samples as received. Results are generated from the field sampling data (sampling volumes and areas, locations, etc.) provided by the client on the Chain of Custody. Samples are within quality control criteria and met method specifications unless otherwise noted. The above analyses were performed in general compliance with Appendix E to Subpart E of 40 CFR (previously EPA 600/M4-82-020 "Interim Method") but augmented with procedures outlined in the 1993 ("final") version of the method. This report must not be used by the client to claim product certification, approval, or endorsement by NVLAP, NIST or any agency of the federal government. Non-friable organically bound materials present a problem matrix and therefore EMSL recommends gravimetric reduction prior to analysis. Unless requested by the client, building materials manufactured with multiple layers (i.e. linoleum, wallboard, etc.) are reported as a single sample. Estimation of uncertainty is available on request.

Samples analyzed by EMSL Analytical, Inc. Indianapolis, IN NVLAP Lab Code 200188-0, AZ0939, CA 2575, CO AL-15132, TX 300262

EMSL Analytical, Inc.
6340 CastlePlace Dr. Indianapolis, IN 46250
Tel/Fax: (317) 803-2997 / (317) 803-3047
http://www.EMSL.com / indianapolislab@emsl.com

EMSL Order: 162211300
Customer ID: IMPA25
Customer PO:
Project ID:

Attention: Kim Crosser
Impact7G
8951 Windsor Parkway
Johnston, IA 50131

Phone: (515) 460-1124
Fax: (515) 528-8005
Received Date: 05/23/2022 9:20 AM
Analysis Date: 05/24/2022
Collected Date:

Project: CITY OF MARSHALLTOWN 23 WEST MAIN

Test Report: Asbestos Analysis of Bulk Materials via EPA 600/R-93/116 Method using Polarized Light Microscopy

			Non-Asbestos		Asbestos
Sample	**Description**	**Appearance**	**% Fibrous**	**% Non-Fibrous**	**% Type**
23-07B *162211300-0010*	SKIM COAT WHITE 2 - WALLS AROUND WINDOW	White Non-Fibrous Homogeneous		100.0% Non-fibrous (Other)	**None Detected**
23-07C *162211300-0011*	SKIM COAT WHITE 2 - WALLS AROUND WINDOW	White Non-Fibrous Homogeneous		100.0% Non-fibrous (Other)	**None Detected**

EMSL maintains liability limited to cost of analysis. Interpretation and use of test results are the responsibility of the client. This report relates only to the samples reported above, and may not be reproduced, except in full, without written approval by EMSL. EMSL bears no responsibility for sample collection activities or analytical method limitations. The report reflects the samples as received. Results are generated from the field sampling data (sampling volumes and areas, locations, etc.) provided by the client on the Chain of Custody. Samples are within quality control criteria and met method specifications unless otherwise noted. The above analyses were performed in general compliance with Appendix E to Subpart E of 40 CFR (previously EPA 600/M4-82-020 "Interim Method") but augmented with procedures outlined in the 1993 ("final") version of the method. This report must not be used by the client to claim product certification, approval, or endorsement by NVLAP, NIST or any agency of the federal government. Non-friable organically bound materials present a problem matrix and therefore EMSL recommends gravimetric reduction prior to analysis. Unless requested by the client, building materials manufactured with multiple layers (i.e. linoleum, wallboard, etc.) are reported as a single sample. Estimation of uncertainty is available on request.

Samples analyzed by EMSL Analytical, Inc. Indianapolis, IN NVLAP Lab Code 200188-0, AZ0939, CA 2575, CO AL-15132, TX 300262

EMSL Analytical, Inc.
6340 CastlePlace Dr. Indianapolis, IN 46250
Tel/Fax: (317) 803-2997 / (317) 803-3047
http://www.EMSL.com / indianapolislab@emsl.com

EMSL Order: 162211300
Customer ID: IMPA25
Customer PO:
Project ID:

Attention: Kim Crosser
Impact7G
8951 Windsor Parkway
Johnston, IA 50131

Phone: (515) 460-1124
Fax: (515) 528-8005
Received Date: 05/23/2022 9:20 AM
Analysis Date: 05/24/2022
Collected Date:

Project: CITY OF MARSHALLTOWN 23 WEST MAIN

The samples in this report were submitted to EMSL for analysis by Asbestos Analysis of Bulk materials via EPA/600 (0513) Method using Polarized Light Microscopy. The reference number for these samples is the EMSL Order ID above. Please use this reference number when calling about these samples.

Report Comments:

Sample Receipt Date:	05/23/2022	Sample Receipt Time:	9:20 AM
Analysis Completed Date:	05/24/2022	Analysis Completed Time:	10:47 AM

Analyst(s):

Maggie Hayden PLM (11)

Samples Reviewed and approved by:

Asbestos Laboratory Manager
or other approved signatory

EMSL maintains liability limited to cost of analysis. Interpretation and use of test results are the responsibility of the client. This report relates only to the samples reported above, and may not be reproduced, except in full, without written approval by EMSL. EMSL bears no responsibility for sample collection activities or analytical method limitations. The report reflects the samples as received. Results are generated from the field sampling data (sampling volumes and areas, locations, etc.) provided by the client on the Chain of Custody. Samples are within quality control criteria and met method specifications unless otherwise noted. The above analyses were performed in general compliance with Appendix E to Subpart E of 40 CFR (previously EPA 600/M4-82-020 "Interim Method") but augmented with procedures outlined in the 1993 ("final") version of the method. This report must not be used by the client to claim product certification, approval, or endorsement by NVLAP, NIST or any agency of the federal government. Non-friable organically bound materials present a problem matrix and therefore EMSL recommends gravimetric reduction prior to analysis. Unless requested by the client, building materials manufactured with multiple layers (i.e. linoleum, wallboard, etc.) are reported as a single sample. Estimation of uncertainty is available on request.

Samples analyzed by EMSL Analytical, Inc. Indianapolis, IN NVLAP Lab Code 200188-0, AZ0939, CA 2575, CO AL-15132, TX 300262

OrderID: 162211300

Ship Date:

EMSL ANALYTICAL, INC.
LABORATORY • PRODUCTS • TRAINING

Asbestos Chain of Custody EMSL Order Number
(Lab Use Only)

162211300

6340 Castleplace Dr.
Indianapolis, IN 46250
Phone: (317)803-2997
Fax: (317)803-3047

Company: IMPACT7G		☑ EMSL – Bill to: Same *Third Party Billing requires written authorization from third party.*	
Street: 8951 Windsor Parkway			
City: Johnston	State: IA	Zip Code: 50131	Country: USA
Report To: Kim Crosser		Phone: 515-685-2299	Fax: 515-685-2236
Email Address: kcrosser@impact7g.com		Please Provide results: EMAIL	
Project Name: City of Marshalltown - 23 West Main			
US State Samples Taken: IA			

Turnaround Time (TAT) Options

☐ 3-Hour ☐ 6-Hour ☑ 24-Hour ☐ 32-Hour ☐ 48 -Hour ☐ 72-Hour ☐ 1 Week ☐ 2 Week

**For TEM Air 3 hr through 6 hr, please call ahead to schedule *There is a premium charge for 3 hr TEM AHERA or EPA Level II TAT. You will be asked to sign an authorization form for this service. Analysis completed in accordance with EMSL's Terms and Conditions located in the Analytic Price Guide.*

PLM – BULK (reporting limit)
☑ PLM EPA 600/R-93/116 (<1%)

TEM – Air ☐ 4-4.5hr TAT (AHERA only)
☐ AHERA 40 CFR, Part 763

Sampler Names: Aaron Heuss

Sampler Signature:

☐ Check for Positive Stop – Clearly Identify Homogeneous Group

Filter Pore Size (Air Samples): ☐0.8 µm ☐0.45 µm

Sample ID	Sample Material/Description	Color	Floor	Location	Sample Date
23-01	Caulking	White	Ext	Around Door to 2nd Floor	
23-02	Caulking	White	Ext	Behind Overhang	
23-03	Caulking	black	Ext	Around Main Windows	
23-04	Window Seal	Black	Ext	Around Main Windows	
23-05	caulking	White	Ext	Around Soffits	
23-06ABC	Plaster	Gray	2	Walls Around Window	
23-07ABC	Skim Coat	White	2	Walls Around Window	

Client Sample # (s):	23-01-07C			Total #:	11
Relinquished (Client):	Aaron Heuss	Date:	5/19/2022	Time:	
Received (Lab):		Date:	5/23/22	Time:	9:20
Comments/Special Instructions:	PLEASE SAMPLE ALL LAYERS, ADHESIVES, TEXTURES, ETC. Thanks!				

APPENDIX C

Photographs

Photograph table includes photos of all asbestos-containing materials.

5/19/22 **Photographer:** **Aaron Heuss**	**Asbestos Containing Materials Inspection** **23 West Main Street** **Marshalltown, Iowa**
Photo #1 **Description:** ACM Gray/White Caulking **Location:** Exterior, Around Door 2nd Floor **Sample** 23WM-01	
Photo #2 **Description:** ACM Gray/Tan Caulking **Location:** Exterior, Behind Overhang **Sample** 23WM-02	

LIMITED ASBESTOS CONTAINING MATERIALS INSPECTION

Commercial Property
25 West Main Street
Marshalltown, Iowa

Prepared for:

City of Marshalltown
36 N Center Street
Marshalltown, Iowa 50158

Prepared by:

IMPACT7G

8951 Windsor Parkway
Johnston, Iowa 50131

May 24, 2022

LIMITED ASBESTOS CONTAINING MATERIALS INSPECTION

Commercial Property
25 West Main Street
Marshalltown, Iowa

Inspected and Prepared by:

Aaron Heuss
Environmental Specialist I
Iowa Certified Asbestos Inspector: 22-8210I

Prepared and Reviewed by:

Kim Crosser - Harms
Sr. Project Manager
Iowa Certified Asbestos Inspector: 22-8148I

TABLE OF CONTENTS

1.0 EXECUTIVE SUMMARY 1
2.0 INTRODUCTION 2
3.0 PROPERTY DESCRIPTION 3
4.0 INSPECTION LIMITATIONS 3
5.0 INSPECTION ACTIVITIES 3
6.0 CONCLUSIONS / RECOMMENDATIONS 5
7.0 CONDITIONS & LIMITATIONS 5

LIST OF TABLES

Table 1 – Non-Asbestos Containing Material Sample List

APPENDICES

APPENDIX A - Qualifications
APPENDIX B - Laboratory Reports & Chain of Custody Documentation

1.0 EXECUTIVE SUMMARY

Impact7G, Inc. (Impact7G), completed a Limited Asbestos Containing Materials (ACM) Inspection on May 19, 2022 of the façade of the building located at 25 West Main Street, Marshalltown, Iowa (Property). The purpose of this Limited ACM Inspection is to document the presence of asbestos containing materials and assist the City of Marshalltown (Client) in facilitating renovation activities of the facade.

Asbestos was not detected in any of the eight (8) samples collected from various building components within the Property's façade. See Table 1 for additional information.

Based on these results, the Property's façade does not require any further action prior to any renovation activities.

2.0 INTRODUCTION

A. Property Information

Location:

Commercial Property
25 West Main Street
Marshalltown, Iowa 50158

Contact Person:

City of Marshalltown
Deb Millizer
36 N Center Street
Marshalltown, Iowa 50158

B. Personnel

Sr. Project Manager: Kim Crosser-Harms	State of Iowa License	22-8148I
Inspector: Aaron Heuss	State of Iowa License	22-8210I

C. Sampling Plan

According to the Client, the scope of this Limited ACM Inspection includes the façade of the building.

This Limited ACM Inspection is in accordance with OSHA Regulation 1926.1101. All samples collected in the field were sent to EMSL, an NVLAP certified laboratory for analysis. The samples were analyzed via the polarized light microscopy (PLM) method for asbestos content. If requested by Client, samples were further analyzed via the transmission electron microscopy (TEM) method or PLM 400 Point Count analysis method.

D. Regulation Review

The U.S. EPA qualifies asbestos containing materials (ACM) as materials with an asbestos content greater than 1%. According to Iowa OSHA, ACM is any material found to contain asbestos, regardless of its concentration, and shall be regulated as hazardous waste. The following definitions are taken from Section 61.141 of Subpart M, Part 61 of Title 40: Protection of Environment of the Code of Federal Regulations (CFR).

- "Category I nonfriable asbestos-containing material (ACM)" is defined as asbestos-containing packings, gaskets, resilient floor covering, and asphalt roofing products containing more than 1% asbestos as determined using the method specified in appendix E, subpart E, 40 CFR part 763, section 1, Polarized Light Microscopy (PLM).
- "Category II nonfriable ACM" is defined as any material, excluding Category I nonfriable ACM, containing more than 1% asbestos as determined using the methods specified in appendix E, subpart E, 40 CFR part 763, section 1, PLM that, when dry, ***cannot*** be crumbled, pulverized, or reduced to powder by hand pressure.
- "Friable asbestos material" is defined as any material containing more than 1% asbestos as determined using the methods specified in appendix E, subpart E, 40 CFR part 763, section 1, PLM that when dry, ***can*** be crumbled, pulverized, or

reduced to powder by hand pressure. If the asbestos content is less than 10% as determined by a method other than point counting by PLM, verify the asbestos content by point counting using PLM.

3.0 PROPERTY DESCRIPTION

The Property consists of a two-story 5,360 SF commercial building constructed in 1890. The 1st floor is currently occupied by Skokin' G's BBQ Restaurant.

4.0 INSPECTION LIMITATIONS

An Inspection limitation, for the purpose of this report, is any action or task that is limited from the original scope work. The overall reason for any limitation is the protection of Impact7G personnel. Examples of limitations can range from a lack of accessibility to an area of the Property, unsafe work areas, collecting additional samples, etc.

- **Only the façade of the building was inspected.**

5.0 INSPECTION ACTIVITIES

Iowa certified asbestos inspectors from Impact7G collected 8 samples on May 19, 2022. The samples were collected from various accessible building components located throughout the façade. Upon completion of bulk sampling activities, samples were sent to EMSL, an NVLAP certified laboratory for analysis.

Materials that are "suspected" to contain asbestos are divided into the following three categories:

1. **Surfacing materials** are materials that are sprayed or troweled on for acoustical, decorative, or fireproofing purposes. Examples are textured ceilings or drywall, exterior stucco and structural steel fireproofing;

2. **Thermal System Insulation (TSI)** is insulation used to inhibit heat transfer from pipes, boilers, tanks, ducts, and various other components of hot and cold-water systems and HVAC systems. Examples are hard cementitious "mud" type insulation on pipe elbows and tees, pipe insulation runs and risers, boiler insulation, flues; and,

3. **Miscellaneous** materials are mostly non-friable products when maintained in good condition. Examples are resilient floor coverings including vinyl, linoleum and floor tile, mastics and adhesives, cement products, caulk, drywall, ceiling tile and roofing materials.

The following table show samples identified by the laboratory to be non-asbestos containing materials (NACM). The complete analytical results can be found in Appendix B.

Table 1 – Non-Asbestos Containing Material Sample List

Sample #	Material Substance	Material Type (Surf/TSI/Misc)	Friable (Y or N)	Color	Floor	Location	Asbestos Content
25-01ABC	Plaster	Misc	Y	Gray	2	Walls Around Windows	ND
25-02ABC	Skim Coat	Surf	Y	White	2	Walls Around Windows	ND
25-03	Window Glaze	Misc	N	White	2	On All Windows	ND
25-04	Caulking	Misc	N	Black	Ext	Door To Upstairs	ND

Material Type – Surf=Surfacing, TSI=Thermal System Insulation, Misc=Miscellaneous / **Asbestos Content** – ND=None Detected
B=Basement, R=Roof, Int=Interior, Ext=Exterior

6.0 CONCLUSIONS / RECOMMENDATIONS

The following conclusions and recommendations are summarized as follows:

- Asbestos was not detected in any of the bulk material samples collected from the façade of the building located at 25 West Main Street, Marshalltown, Iowa. Based on the results of the data collected during the assessment, the façade of the building requires no further action prior to renovation.

7.0 CONDITIONS & LIMITATIONS

The Iowa Department of Natural Resources' (IDNR) Air Quality Bureau and Occupational Safety and Health Bureau (OSHA) of the Iowa Division of Labor Services require notification of any renovation/demolition activities in non-residential projects if the combined regulated ACM meets or exceeds any of the following thresholds: 160 square feet of surfacing ACM, 260 linear feet of TSI, or 35 cubic feet of ACM debris.

Impact7G has performed the tasks contained within this report in a thorough and professional manner consistent with commonly accepted standard industry practices. The results, findings, conclusions and recommendations expressed in this report are based on conditions observed during our survey of the property. Impact7G cannot guarantee, and does not warrant, that this report has identified all adverse environmental factors and/or conditions affecting the subject property. <u>This report is not a bidding document or project specification as it does not contain the necessary components</u>. Impact7G cannot warrant the work of any third party that may have aided in the completion of this report. This report has been prepared on behalf of and exclusively for use by the City of Marshalltown for specific application to their project as discussed. Contractors, consultants or other third parties reviewing this report must draw their own conclusions regarding data contained within the report, further investigation or required remediation.

APPENDIX A

Qualifications

AARON HEUSS

DOB: 06-25-1982

Issued: 04-19-2022

This person is licensed to perform asbestos work in the State of Iowa. ID card is intended for official use only and must be present on jobsite.

License Type	Number	Expires
INSPECTOR	22-8210	02-22-2023
SUPERVISOR	22-8211	02-23-2023

DIVISION OF IOWA LABOR

Asbestos

Rod A. Roberts

Rod A. Roberts
Labor Commissioner

APPENDIX B

Laboratory Reports &
Chain of Custody Documentation

EMSL Analytical, Inc.
6340 CastlePlace Dr. Indianapolis, IN 46250
Tel/Fax: (317) 803-2997 / (317) 803-3047
http://www.EMSL.com / indianapolislab@emsl.com

EMSL Order: 162211289
Customer ID: IMPA25
Customer PO:
Project ID:

Attention: Kim Crosser
Impact7G
8951 Windsor Parkway
Johnston, IA 50131

Project: CITY OF MARSHALLTOWN - 25 WEST MAIN

Phone: (515) 460-1124
Fax: (515) 528-8005
Received Date: 05/23/2022 9:20 AM
Analysis Date: 05/24/2022
Collected Date:

Test Report: Asbestos Analysis of Bulk Materials via EPA 600/R-93/116 Method using Polarized Light Microscopy

			Non-Asbestos		Asbestos
Sample	**Description**	**Appearance**	**% Fibrous**	**% Non-Fibrous**	**% Type**
25-01A *162211289-0001*	PLASTER GRAY 2 - WALLS AROUND WINDOWS	Gray Non-Fibrous Homogeneous	<1% Hair	20% Quartz 80.0% Non-fibrous (Other)	**None Detected**
25-01B *162211289-0002*	PLASTER GRAY 2 - WALLS AROUND WINDOWS	Gray Non-Fibrous Homogeneous	<1% Hair	20% Quartz 80.0% Non-fibrous (Other)	**None Detected**
25-01C *162211289-0003*	PLASTER GRAY 2 - WALLS AROUND WINDOWS	Gray Non-Fibrous Homogeneous	<1% Hair	20% Quartz 80.0% Non-fibrous (Other)	**None Detected**
25-02A *162211289-0004*	SKIM COAT WHITE 2 - WALLS AROUND WINDOWS	White Non-Fibrous Homogeneous		100.0% Non-fibrous (Other)	**None Detected**
25-02B *162211289-0005*	SKIM COAT WHITE 2 - WALLS AROUND WINDOWS	White Non-Fibrous Homogeneous		100.0% Non-fibrous (Other)	**None Detected**
25-02C *162211289-0006*	SKIM COAT WHITE 2 - WALLS AROUND WINDOWS	White Non-Fibrous Homogeneous		100.0% Non-fibrous (Other)	**None Detected**
25-03 *162211289-0007*	WINDOW GLAZE WHITE 2 - ON ALL WINDOWS	Gray/Tan Non-Fibrous Homogeneous		100.0% Non-fibrous (Other)	**None Detected**
25-04 *162211289-0008*	CAULKING BLACK EXT - DOOR TO UPSTAIRS	Black Non-Fibrous Homogeneous		100.0% Non-fibrous (Other)	**None Detected**

EMSL maintains liability limited to cost of analysis. Interpretation and use of test results are the responsibility of the client. This report relates only to the samples reported above, and may not be reproduced, except in full, without written approval by EMSL. EMSL bears no responsibility for sample collection activities or analytical method limitations. The report reflects the samples as received. Results are generated from the field sampling data (sampling volumes and areas, locations, etc.) provided by the client on the Chain of Custody. Samples are within quality control criteria and met method specifications unless otherwise noted. The above analyses were performed in general compliance with Appendix E to Subpart E of 40 CFR (previously EPA 600/M4-82-020 "Interim Method") but augmented with procedures outlined in the 1993 ("final") version of the method. This report must not be used by the client to claim product certification, approval, or endorsement by NVLAP, NIST or any agency of the federal government. Non-friable organically bound materials present a problem matrix and therefore EMSL recommends gravimetric reduction prior to analysis. Unless requested by the client, building materials manufactured with multiple layers (i.e. linoleum, wallboard, etc.) are reported as a single sample. Estimation of uncertainty is available on request.

Samples analyzed by EMSL Analytical, Inc. Indianapolis, IN NVLAP Lab Code 200188-0, AZ0939, CA 2575, CO AL-15132, TX 300262

EMSL Analytical, Inc.
6340 CastlePlace Dr. Indianapolis, IN 46250
Tel/Fax: (317) 803-2997 / (317) 803-3047
http://www.EMSL.com / indianapolislab@emsl.com

EMSL Order: 162211289
Customer ID: IMPA25
Customer PO:
Project ID:

Attention: Kim Crosser
Impact7G
8951 Windsor Parkway
Johnston, IA 50131

Phone: (515) 460-1124
Fax: (515) 528-8005
Received Date: 05/23/2022 9:20 AM
Analysis Date: 05/24/2022
Collected Date:

Project: CITY OF MARSHALLTOWN - 25 WEST MAIN

The samples in this report were submitted to EMSL for analysis by Asbestos Analysis of Bulk materials via EPA/600 (0513) Method using Polarized Light Microscopy. The reference number for these samples is the EMSL Order ID above. Please use this reference number when calling about these samples.

Report Comments:

Sample Receipt Date:	05/23/2022	Sample Receipt Time:	9:20 AM
Analysis Completed Date:	05/24/2022	Analysis Completed Time:	10:48 AM

Analyst(s):

Ross A. Matlock

Ross Matlock PLM (8)

Samples Reviewed and approved by:

Melissa Newkirk

Asbestos Laboratory Manager
or other approved signatory

EMSL maintains liability limited to cost of analysis. Interpretation and use of test results are the responsibility of the client. This report relates only to the samples reported above, and may not be reproduced, except in full, without written approval by EMSL. EMSL bears no responsibility for sample collection activities or analytical method limitations. The report reflects the samples as received. Results are generated from the field sampling data (sampling volumes and areas, locations, etc.) provided by the client on the Chain of Custody. Samples are within quality control criteria and met method specifications unless otherwise noted. The above analyses were performed in general compliance with Appendix E to Subpart E of 40 CFR (previously EPA 600/M4-82-020 "Interim Method") but augmented with procedures outlined in the 1993 ("final") version of the method. This report must not be used by the client to claim product certification, approval, or endorsement by NVLAP, NIST or any agency of the federal government. Non-friable organically bound materials present a problem matrix and therefore EMSL recommends gravimetric reduction prior to analysis. Unless requested by the client, building materials manufactured with multiple layers (i.e. linoleum, wallboard, etc.) are reported as a single sample. Estimation of uncertainty is available on request.

Samples analyzed by EMSL Analytical, Inc. Indianapolis, IN NVLAP Lab Code 200188-0, AZ0939, CA 2575, CO AL-15132, TX 300262

OrderID: 162211289

Ship Date:

EMSL ANALYTICAL, INC.
LABORATORY • PRODUCTS • TRAINING

Asbestos Chain of Custody EMSL Order Number
(Lab Use Only)

162211289

6340 Castleplace Dr.
Indianapolis, IN 46250
Phone: (317)803-2997
Fax: (317)803-3047

Company: IMPACT7G		☑ EMSL – Bill to: Same *Third Party Billing requires written authorization from third party.*	
Street: 8951 Windsor Parkway			
City: Johnston	State: IA	Zip Code: 50131	Country: USA
Report To: Kim Crosser		Phone: 515-685-2299	Fax: 515-685-2236
Email Address: kcrosser@impact7g.com		Please Provide results: EMAIL	
Project Name: City of Marshalltown - 25 West Main			
US State Samples Taken: IA			

Turnaround Time (TAT) Options

☐ 3-Hour ☐ 6-Hour ☑ 24-Hour ☐ 32-Hour ☐ 48 -Hour ☐ 72-Hour ☐ 1 Week ☐ 2 Week

**For TEM Air 3 hr through 6 hr, please call ahead to schedule. *There is a premium charge for 3 hr TEM AHERA or EPA Level II TAT. You will be asked to sign an authorization form for this service. Analysis completed in accordance with EMSL's Terms and Conditions located in the Analytic Price Guide.*

PLM – BULK (reporting limit)
☑ PLM EPA 600/R-93/116 (<1%)

TEM – Air ☐ 4-4.5hr TAT (AHERA only)
☐ AHERA 40 CFR, Part 763

Sampler Names: Aaron Heuss
Sampler Signature:

☐ Check for Positive Stop – Clearly Identify Homogeneous Group
Filter Pore Size (Air Samples): ☐0.8 µm ☐0.45 µm

Sample ID	Sample Material/Description	Color	Floor	Location	Sample Date
25-01ABC	Plaster	Gray	2	Walls Around Windows	
25-02ABC	Skim Coat	White	2	Walls Around Windows	
25-03	Window Glaze	White	2	On All Windows	
25-04	Caulking	Black	Ext	Door To Upstairs	

Client Sample # (s):	25-01A-04			Total #:	8
Relinquished (Client):	Aaron Heuss	Date:	5/19/2022	Time:	
Received (Lab):		Date:	5/23/22	Time:	920
Comments/Special Instructions:	PLEASE SAMPLE ALL LAYERS, ADHESIVES, TEXTURES, ETC. Thanks!				

SECTION 00 41 13 – BID FORM - STIPULATED SUM (SINGLE-PRIME CONTRACT)

BID TO: City of Marshalltown
24 North Center Street
Marshalltown, IA 50158

BID FROM: .....

.....

BID FOR: Contract work for the: **Marshalltown Façade Rehabilitation**
As shown in Bidding Documents dated: **February 20, 2023**

BID PLACE: City Hall
24 North Center Street
Marshalltown, IA 50158

BID DATE: **March 21, 2023** **BID TIME:** **2:00 PM (local time)**

1. The undersigned BIDDER agrees, if the Bid is accepted, to enter into an agreement with OWNER, in the form included in the Bidding Documents, to perform and furnish the Work as specified or indicated in the Bidding Documents for the Bid Price and within the Bid Time indicated in this Bid and in accordance with the other terms and conditions of the Contract Documents.

2. In submitting this Bid, BIDDER represents, as more fully set forth in the Agreement, that:

   A. This Bid will remain subject to acceptance for 30 days after the day of Bid opening;

   B. To the extent permitted by law, the Owner has the right to accept or reject this Bid, including alternate bids, and to waive minor informalities in the bidding;

   C. BIDDER accepts the provisions of the Instructions and Supplementary Instructions to Bidders regarding disposition of Bid Security;

   D. BIDDER will sign and submit the Agreement with the Bonds and other documents required by the Bidding Requirements within 10 days after the date of Owner's Notice of Award;

   E. BIDDER has examined copies of all the Bidding Documents;

   F. BIDDER has visited the site and become familiar with the general, local and site conditions;

   G. BIDDER is familiar with federal, state, and local laws and regulations;

   H. BIDDER has correlated the information known to BIDDER, information and observations obtained from visits to the site, reports and drawings identified in the Bidding Documents and additional examinations, investigations, explorations, tests, studies and data with the Bidding Documents;

   I. This Bid is genuine and not made in the interest of or on behalf of an undisclosed person, firm or corporation and is not submitted in conformity with an agreement or rules of a group, association, organization or corporation; BIDDER has not directly or indirectly induced or solicited another Bidder to submit a false or sham Bid; BIDDER has not solicited or induced a person, firm or corporation to refrain from bidding; and BIDDER has not sought by collusion

to obtain for itself an advantage over another BIDDER or over OWNER.

J. **This project is sales tax exempt. The owner will issue an exemption certificate for the purchase or use of building materials, supplies, and equipment that will be used in the performance of the construction contract**.

K. BIDDER agrees to comply with the requirements and provisions of Davis-Bacon and Related Acts for this Project.

L. BIDDER will submit the schedule of values to the Architect within 48 hours after the bid opening. Providing, either as a separate breakout schedule or incorporated directly into the Schedule of Values, a detailed valuation of each individual business address listed in Section 01 10 00 "Summary" and Section 01 23 00 "Alternates".

M. In accordance with Iowa Code 26.9(2) and 26.16, no potential bidder shall be required to provide confidential or proprietary information or meet any class requirements as a precondition to submitting a responsive bid. However, as noted in Iowa Code 26.9(2), the lowest responsive bidder may be required to provide additional information to verify responsibility prior to and as a condition of obtaining final award of the contract. Any qualification requirements contained in any bid document indicates only preferred qualifications, not a precondition to bid, and the lowest responsive bidder's qualifications will be evaluated individually based on all information provided.

3. BIDDER has received the following Addenda. Receipt of which is hereby acknowledged;

Addendum No.	Dated	Addendum No.	Dated
Addendum No.	Dated	Addendum No.	Dated
Addendum No.	Dated	Addendum No.	Dated

4. BIDDER will complete the work in accordance with the Contract Documents for the following price:

LUMP SUM BID:	EXCLUDE adjustments to the work called out to be priced as Alternates.
Sum of:	$
	DOLLARS
	(Fill in amount in both numbers and words.)

5. **ALTERNATES**: Include cost variation to above Individual Bid Price applicable to the Work in accordance with Division 01 Section "Alternates". (Note: Description of work indicated here is only a brief summary. See Contract Documents, including drawings, for full definition of each Alternate.)

ALTERNATE No. 1:	ADD scope of work: • 1: replace awning(s) + remove canopy & repair plaster • 2: replace awning(s) • 5: replace awning(s)

- 6: provide awning(s)

Add Sum of: $

DOLLARS

(Fill in amount in both numbers and words.)

ALTERNATE No. 2:

ADD scope of work:

- 1: replace stucco and repoint masonry
- 1: rehabilitate windows
- 2: masonry cleaning
- 3: masonry cleaning

Add Sum of: $

DOLLARS

(Fill in amount in both numbers and words.)

ALTERNATE No. 3:

ADD scope of work:

- 2: exterior vestibules and storefront repairs
- 3: remove panels, replace siding (front entrance, south & east)
- 3: exterior vestibule and storefront repairs
- 6: replace storefront

Add Sum of: $

DOLLARS

(Fill in amount in both numbers and words.)

ALTERNATE No. 4:

ADD scope of work:

- 1: replace windows
- 2: rehabilitate windows
- 3: rehabilitate windows + replace doors
- 3: remove panels, replace siding (side entrance, east)
- 5: rehabilitate door
- 7: rehabilitate windows
- 8: replace door, paint windows

Add Sum of: $

DOLLARS

(Fill in amount in both numbers and words.)

6. BIDDER agrees that all Work will be substantially complete on or before the following substantial completion date, and ready for final payment in accordance with the conditions and time period set forth in the General Conditions, on or before: **June 30, 2024.**

7. If awarded the contact, the Bidder intends to award subcontracts in the following areas to the firms listed below:

MASONRY:

8. ATTACHMENTS: The following documents are attached to and made a condition of this Bid:

   A. Bid Security of 5% of the bid amount in the form of a certified check or bid bond is enclosed. The bidder acknowledges the bid security becomes the property of the Owner in the event the contract and bonds are not executed within the time period set forth, as liquidated damages for the delay and additional expense to the Owner caused thereby.

   B. DOL Bidder Status Form: see Section 00 45 13.

   C. Intent to Comply with Section 3 Requirements: see Section 00 45 15.

9. BID FORM SIGNATURE(S):

Signature	Title		
Printed Name	Company Name		
Date	Company Address		
Phone	City	State	Zip
Email			

END OF SECTION 00 41 13

COMPLETE THIS FORM AND RETURN WITH YOUR BID

Bidder Status Form

To be completed by all bidders — Part A

Please answer "Yes" or "No" for each of the following:

☐ Yes ☐ No My company is authorized to transact business in Iowa.
(To help you determine if your company is authorized, please review the worksheet on the next page).

☐ Yes ☐ No My company has an office to transact business in Iowa.

☐ Yes ☐ No My company's office in Iowa is suitable for more than receiving mail, telephone calls, and e-mail.

☐ Yes ☐ No My company has been conducting business in Iowa for at least 3 years prior to the first request for bids on this project.

☐ Yes ☐ No My company is not a subsidiary of another business entity or my company is a subsidiary of another business entity that would qualify as a resident bidder in Iowa.

If you answered "Yes" for each question above, your company qualifies as a resident bidder. Please complete Parts B and D of this form.

If you answered "No" to one or more questions above, your company is a nonresident bidder. Please complete Parts C and D of this form.

To be completed by resident bidders — Part B

My company has maintained offices in Iowa during the past 3 years at the following addresses:

Dates: _____ /_____ /_____ to _____ /_____ /_____ Address: _____

City, State, Zip: _____

Dates: _____ /_____ /_____ to _____ /_____ /_____ Address: _____

City, State, Zip: _____

Dates: _____ /_____ /_____ to _____ /_____ /_____ Address: _____

You may attach additional sheet(s) if needed. City, State, Zip: _____

To be completed by non-resident bidders — Part C

1. Name of home state or foreign country reported to the Iowa Secretary of State:

_____

2. Does your company's home state or foreign country offer preferences to resident bidders, resident labor force preferences or any other type of preference to bidders or laborers? ☐ Yes ☐ No

3. If you answered "Yes" to question 2, identify each preference offered by your company's home state or foreign country and the appropriate legal citation.

_____

_____

You may attach additional sheet(s) if needed.

To be completed by all bidders — Part D

I certify that the statements made on this document are true and complete to the best of my knowledge and I know that my failure to provide accurate and truthful information may be a reason to reject my bid.

Firm Name: _____

Signature: _____ Date: _____

You must submit the completed form to the governmental body requesting bids per 875 Iowa Administrative Code Chapter 156. This form has been approved by the Iowa Labor Commissioner.

Worksheet: Authorization to Transact Business

This worksheet may be used to help complete Part A of the Resident Bidder Status form. If at least one of the following describes your business, you are authorized to transact business in Iowa.

☐ Yes ☐ No My business is currently registered as a contractor with the Iowa Division of Labor.

☐ Yes ☐ No My business is a sole proprietorship and I am an Iowa resident for Iowa income tax purposes.

☐ Yes ☐ No My business is a general partnership or joint venture. More than 50 percent of the general partners or joint venture parties are residents of Iowa for Iowa income tax purposes.

☐ Yes ☐ No My business is an active corporation with the Iowa Secretary of State and has paid all fees required by the Secretary of State, has filed its most recent biennial report, and has not filed articles of dissolution.

☐ Yes ☐ No My business is a corporation whose articles of incorporation are filed in a state other than Iowa, the corporation has received a certificate of authority from the Iowa secretary of state, has filed its most recent biennial report with the secretary of state, and has neither received a certificate of withdrawal from the secretary of state nor had its authority revoked.

☐ Yes ☐ No My business is a limited liability partnership which has filed a statement of qualification in this state and the statement has not been canceled.

☐ Yes ☐ No My business is a limited liability partnership which has filed a statement of qualification in a state other than Iowa, has filed a statement of foreign qualification in Iowa and a statement of cancellation has not been filed.

☐ Yes ☐ No My business is a limited partnership or limited liability limited partnership which has filed a certificate of limited partnership in this state, and has not filed a statement of termination.

☐ Yes ☐ No My business is a limited partnership or a limited liability limited partnership whose certificate of limited partnership is filed in a state other than Iowa, the limited partnership or limited liability limited partnership has received notification from the Iowa secretary of state that the application for certificate of authority has been approved and no notice of cancellation has been filed by the limited partnership or the limited liability limited partnership.

☐ Yes ☐ No My business is a limited liability company whose certificate of organization is filed in Iowa and has not filed a statement of termination.

☐ Yes ☐ No My business is a limited liability company whose certificate of organization is filed in a state other than Iowa, has received a certificate of authority to transact business in Iowa and the certificate has not been revoked or canceled.

COMPLETE THIS FORM AND INCLUDE WITH YOUR BID

SECTION 3 – CONTRACTOR INTENT TO COMPLY

For Project (insert project name): Marshalltown Downtown Revitalization

In (Insert City Name): Marshalltown, Iowa IEDA Project Number: 20-DTR-003

Contractor Name: _____ hereinafter referred to as "CONTRACTOR."

Address: _____ City: _____ State: _____ Zip: _____

This form is the CONTRACTOR's official statement acknowledging their understanding that Section 3 requirements are mandatory for the proposed project which is funded in part with funds from the Department of Housing and Urban Development (HUD). The form also signifies the CONTRACTOR's intent to comply with the Section 3 requirements as outlined in the plans and specifications, including but not limited to, the intent to utilize Section 3 (low to moderate income) workers and subcontractors where possible and complying with all mandatory reporting related to Section 3 HUD guidelines.

In recognition of the intent to comply the CONTRACTOR indicates their compliance with the following certifications:

☐ Yes — If awarded a contract for this HUD-funded project, CONTRACTOR is able to determine employee's hourly wages and addresses.

☐ Yes ☐ No — Is this business a registered Section 3 business with the U.S. Department of Housing and Urban Development? You can search for Section 3 Businesses here: https://hudapps.hud.gov/OpportunityPortal/

☐ Yes — Willing to provide information on the hours worked by all employees, including Section 3 and Targeted Section 3 employees for this job?

☐ Yes — If the need to hire new employees during this job occurs, agree to hire Section 3 qualified employees for those job opportunities presuming all other qualifications are equal with qualified non Section 3 applicants?

☐ Yes — If the need to subcontract arises, willing to CONSIDER hiring and subcontracting with a Section 3 business registered with HUD. You can search for Section 3 Businesses here: https://hudapps.hud.gov/OpportunityPortal/

The CONTRACTOR estimates that the total hours worked on this project by employees of the CONTRACTOR will be _____.

The CONTRACTOR recognizes that this contracting opportunity is subject to HUD Section requirements (24 CFR Part 75). The CONTRACTOR has read and understands the Section 3 requirements as generally described above and presented in the Section 3 contract language included in the procurement documents for this project (plans and specifications, request for qualification, request for proposals, etc.). If awarded a contract, the CONTRACTOR commits to following Section 3 requirements, as they apply to this project. If awarded a contract for this project, the CONTRACTOR agrees to provide reports to the project's Grant Administrator on a timely basis) regarding Section 3 efforts and accomplishments.

Signature: _____ Date: _____

Print Name: _____ Title: _____

Template as of January 23, 2023

SECTION 00 52 13 – AGREEMENT FORM

1.1 AGREEMENT

A. AIA Document A101-2017, Standard Form of Agreement Between Owner and Contractor. A copy of the Agreement is included in the Project Manual.

B. Properly executed copies of this form of agreement will become a part of the Contract Documents

END OF SECTION 00 52 13

AIA Document A101™– 2017

Exhibit A
Insurance and Bonds

This Insurance and Bonds Exhibit is part of the Agreement, between the Owner and the Contractor, dated the « » day of « » in the year « »
(In words, indicate day, month and year.)

for the following **PROJECT**:
(Name and location or address)

Downtown Façade Improvements
Marshalltown, IA

THE OWNER:
(Name, legal status and address)

City of Marshalltown
24 North Center Street
Marshalltown, IA 50158
Phone: 641-754-5701
www.marshalltown-ia.gov

THE CONTRACTOR:
(Name, legal status and address)

Company
Address
City-State-Zip
Phone Number: ???

TABLE OF ARTICLES

A.1 GENERAL

A.2 OWNER'S INSURANCE

A.3 CONTRACTOR'S INSURANCE AND BONDS

A.4 SPECIAL TERMS AND CONDITIONS

ARTICLE A.1 GENERAL

The Owner and Contractor shall purchase and maintain insurance, and provide bonds, as set forth in this Exhibit. As used in this Exhibit, the term General Conditions refers to AIA Document A201™–2017, General Conditions of the Contract for Construction.

ARTICLE A.2 OWNER'S INSURANCE

§ A.2.1 General
Prior to commencement of the Work, the Owner shall secure the insurance, and provide evidence of the coverage, required under this Article A.2 and, upon the Contractor's request, provide a copy of the property insurance policy or policies

AIA Document A101™–2017. Copyright © 1915, 1918, 1925, 1937, 1951, 1958, 1961, 1963, 1967, 1974, 1977, 1987, 1991, 1997, 2007 and 2017 by The American Institute of Architects. **All rights reserved. WARNING: This AIA® Document is protected by U.S. Copyright Law and International Treaties. Unauthorized reproduction or distribution of this AIA® Document, or any portion of it, may result in severe civil and criminal penalties, and will be prosecuted to the maximum extent possible under the law.**

DRAFT

required by Section A.2.3. The copy of the policy or policies provided shall contain all applicable conditions, definitions, exclusions, and endorsements.

§ A.2.2 Liability Insurance
The Owner shall be responsible for purchasing and maintaining the Owner's usual general liability insurance.

§ A.2.3 Required Property Insurance
§ A.2.3.1 Unless this obligation is placed on the Contractor pursuant to Section A.3.3.2.1, the Owner shall purchase and maintain, from an insurance company or insurance companies lawfully authorized to issue insurance in the jurisdiction where the Project is located, **property insurance written on a builder's risk "all-risks"** completed value or equivalent policy form and sufficient to cover the total value of the entire Project on a replacement cost basis. The Owner's property insurance coverage shall be no less than the amount of the initial Contract Sum, plus the value of subsequent Modifications and labor performed and materials or equipment supplied by others. The property insurance shall be maintained until Substantial Completion and thereafter as provided in Section A.2.3.1.3, unless otherwise provided in the Contract Documents or otherwise agreed in writing by the parties to this Agreement. This insurance shall include the interests of the Owner, Contractor, Subcontractors, and Sub-subcontractors in the Project as insureds. This insurance shall include the interests of mortgagees as loss payees.

§ A.2.3.1.1 Causes of Loss. The insurance required by this Section A.2.3.1 shall provide coverage for direct physical loss or damage, and shall not exclude the risks of fire, explosion, theft, vandalism, malicious mischief, collapse, earthquake, flood, or windstorm. The insurance shall also provide coverage for ensuing loss or resulting damage from error, omission, or deficiency in construction methods, design, specifications, workmanship, or materials. Sub-limits, if any, are as follows:
(Indicate below the cause of loss and any applicable sub-limit.)

Causes of Loss	Sub-Limit

§ A.2.3.1.2 Specific Required Coverages. The insurance required by this Section A.2.3.1 shall provide coverage for loss or damage to falsework and other temporary structures, and to building systems from testing and startup. The insurance shall also cover debris removal, including demolition occasioned by enforcement of any applicable legal requirements, and reasonable compensation for the Architect's and Contractor's services and expenses required as a result of such insured loss, including claim preparation expenses. Sub-limits, if any, are as follows:
(Indicate below type of coverage and any applicable sub-limit for specific required coverages.)

Coverage	Sub-Limit

§ A.2.3.1.3 Unless the parties agree otherwise, upon Substantial Completion, the Owner shall continue the insurance required by Section A.2.3.1 or, if necessary, replace the insurance policy required under Section A.2.3.1 with property insurance written for the total value of the Project that shall remain in effect until expiration of the period for correction of the Work set forth in Section 12.2.2 of the General Conditions.

§ A.2.3.1.4 Deductibles and Self-Insured Retentions. If the insurance required by this Section A.2.3 is subject to deductibles or self-insured retentions, the Owner shall be responsible for all loss not covered because of such deductibles or retentions.

§ A.2.3.2 Occupancy or Use Prior to Substantial Completion. The Owner's occupancy or use of any completed or partially completed portion of the Work prior to Substantial Completion shall not commence until the insurance company or companies providing the insurance under Section A.2.3.1 have consented in writing to the continuance of coverage. The Owner and the Contractor shall take no action with respect to partial occupancy or use that would cause cancellation, lapse, or reduction of insurance, unless they agree otherwise in writing.

§ A.2.3.3 Insurance for Existing Structures
If the Work involves remodeling an existing structure or constructing an addition to an existing structure, the Owner shall purchase and maintain, until the expiration of the period for correction of Work as set forth in Section 12.2.2 of the General Conditions, "all-risks" property insurance, on a replacement cost basis, protecting the existing structure against direct physical loss or damage from the causes of loss identified in Section A.2.3.1, notwithstanding the undertaking of the Work. The Owner shall be responsible for all co-insurance penalties.

AIA Document A101™–2017. Copyright © 1915, 1918, 1925, 1937, 1951, 1958, 1961, 1963, 1967, 1974, 1977, 1987, 1991, 1997, 2007 and 2017 by The American Institute of Architects. **All rights reserved. WARNING: This AIA® Document is protected by U.S. Copyright Law and International Treaties. Unauthorized reproduction or distribution of this AIA® Document, or any portion of it, may result in severe civil and criminal penalties, and will be prosecuted to the maximum extent possible under the law.**

~~**§ A.2.4 Optional Extended Property Insurance.**~~
~~The Owner shall purchase and maintain the insurance selected and described below.~~
~~*(Select the types of insurance the Owner is required to purchase and maintain by placing an X in the box(es) next to the description(s) of selected insurance. For each type of insurance selected, indicate applicable limits of coverage or other conditions in the fill point below the selected item.)*~~

☐ ~~**§ A.2.4.1 Loss of Use, Business Interruption, and Delay in Completion Insurance**, to reimburse the Owner for loss of use of the Owner's property, or the inability to conduct normal operations due to a covered cause of loss.~~

~~«→»~~

☐ ~~**§ A.2.4.2 Ordinance or Law Insurance**, for the reasonable and necessary costs to satisfy the minimum requirements of the enforcement of any law or ordinance regulating the demolition, construction, repair, replacement or use of the Project.~~

~~«→»~~

☐ ~~**§ A.2.4.3 Expediting Cost Insurance**, for the reasonable and necessary costs for the temporary repair of damage to insured property, and to expedite the permanent repair or replacement of the damaged property.~~

~~«→»~~

☐ ~~**§ A.2.4.4 Extra Expense Insurance**, to provide reimbursement of the reasonable and necessary excess costs incurred during the period of restoration or repair of the damaged property that are over and above the total costs that would normally have been incurred during the same period of time had no loss or damage occurred.~~

~~«→»~~

☐ ~~**§ A.2.4.5 Civil Authority Insurance**, for losses or costs arising from an order of a civil authority prohibiting access to the Project, provided such order is the direct result of physical damage covered under the required property insurance.~~

~~«→»~~

☐ ~~**§ A.2.4.6 Ingress/Egress Insurance**, for loss due to the necessary interruption of the insured's business due to physical prevention of ingress to, or egress from, the Project as a direct result of physical damage.~~

~~«→»~~

☐ ~~**§ A.2.4.7 Soft Costs Insurance**, to reimburse the Owner for costs due to the delay of completion of the Work, arising out of physical loss or damage covered by the required property insurance: including construction loan fees; leasing and marketing expenses; additional fees, including those of architects, engineers, consultants, attorneys and accountants, needed for the completion of the construction, repairs, or reconstruction; and carrying costs such as property taxes, building permits, additional interest on loans, realty taxes, and insurance premiums over and above normal expenses.~~

~~«→»~~

~~**§ A.2.5 Other Optional Insurance.**~~
~~The Owner shall purchase and maintain the insurance selected below.~~
~~*(Select the types of insurance the Owner is required to purchase and maintain by placing an X in the box(es) next to the description(s) of selected insurance.)*~~

DRAFT

AIA Document A101™–2017. Copyright © 1915, 1918, 1925, 1937, 1951, 1958, 1961, 1963, 1967, 1974, 1977, 1987, 1991, 1997, 2007 and 2017 by The American Institute of Architects. **All rights reserved. WARNING: This AIA® Document is protected by U.S. Copyright Law and International Treaties. Unauthorized reproduction or distribution of this AIA® Document, or any portion of it, may result in severe civil and criminal penalties, and will be prosecuted to the maximum extent possible under the law.**

☐ ~~**§ A.2.5.1 Cyber Security Insurance** for loss to the Owner due to data security and privacy breach, including costs of investigating a potential or actual breach of confidential or private information.~~
~~*(Indicate applicable limits of coverage or other conditions in the fill point below.)*~~

~~« »~~

☐ ~~**§ A.2.5.2 Other Insurance**~~
~~*(List below any other insurance coverage to be provided by the Owner and any applicable limits.)*~~

~~**Coverage**~~	~~**Limits**~~

ARTICLE A.3 CONTRACTOR'S INSURANCE AND BONDS

§ A.3.1 General

§ A.3.1.1 Certificates of Insurance. The Contractor shall provide certificates of insurance acceptable to the Owner evidencing compliance with the requirements in this Article A.3 at the following times: (1) prior to commencement of the Work; (2) upon renewal or replacement of each required policy of insurance; and (3) upon the Owner's written request. An additional certificate evidencing continuation of commercial liability coverage, including coverage for completed operations, shall be submitted with the final Application for Payment and thereafter upon renewal or replacement of such coverage until the expiration of the periods required by Section A.3.2.1 and Section A.3.3.1. The certificates will show the Owner as an additional insured on the Contractor's Commercial General Liability and excess or umbrella liability policy or policies.

§ A.3.1.2 Deductibles and Self-Insured Retentions. The Contractor shall disclose to the Owner any deductible or self-insured retentions applicable to any insurance required to be provided by the Contractor.

§ A.3.1.3 Additional Insured Obligations. To the fullest extent permitted by law, the Contractor shall cause the commercial general liability coverage to include (1) the Owner, the Architect, and the Architect's consultants as additional insureds for claims caused in whole or in part by the Contractor's negligent acts or omissions during the Contractor's operations; and (2) the Owner as an additional insured for claims caused in whole or in part by the Contractor's negligent acts or omissions for which loss occurs during completed operations. The additional insured coverage shall be primary and non-contributory to any of the Owner's general liability insurance policies and shall apply to both ongoing and completed operations. To the extent commercially available, the additional insured coverage shall be no less than that provided by Insurance Services Office, Inc. (ISO) forms CG 20 10 07 04, CG 20 37 07 04, and, with respect to the Architect and the Architect's consultants, CG 20 32 07 04.

§ A.3.2 Contractor's Required Insurance Coverage

§ A.3.2.1 The Contractor shall purchase and maintain the following types and limits of insurance from an insurance company or insurance companies lawfully authorized to issue insurance in the jurisdiction where the Project is located. The Contractor shall maintain the required insurance until the expiration of the period for correction of Work as set forth in Section 12.2.2 of the General Conditions. ~~, unless a different duration is stated below:~~
~~*(If the Contractor is required to maintain insurance for a duration other than the expiration of the period for correction of Work, state the duration.)*~~

§ A.3.2.2 Commercial General Liability

§ A.3.2.2.1 Commercial General Liability insurance for the Project written on an occurrence form with policy limits of not less than One Million Dollars ($1,000,000.00) each occurrence, Two Million Dollars ($2,000,000.00), general aggregate, and One Million Dollars ($1,000,000.00) aggregate for products-completed operations hazard, providing coverage for claims including

- **.1** damages because of bodily injury, sickness or disease, including occupational sickness or disease, and death of any person;
- **.2** personal injury and advertising injury;
- **.3** damages because of physical damage to or destruction of tangible property, including the loss of use of such property;
- **.4** bodily injury or property damage arising out of completed operations; and
- **.5** the Contractor's indemnity obligations under Section 3.18 of the General Conditions.

AIA Document A101™–2017. Copyright © 1915, 1918, 1925, 1937, 1951, 1958, 1961, 1963, 1967, 1974, 1977, 1987, 1991, 1997, 2007 and 2017 by The American Institute of Architects. **All rights reserved. WARNING: This AIA® Document is protected by U.S. Copyright Law and International Treaties. Unauthorized reproduction or distribution of this AIA® Document, or any portion of it, may result in severe civil and criminal penalties, and will be prosecuted to the maximum extent possible under the law.**

§ A.3.2.2.2 The Contractor's Commercial General Liability policy under this Section A.3.2.2 shall not contain an exclusion or restriction of coverage for the following:

- **.1** Claims by one insured against another insured, if the exclusion or restriction is based solely on the fact that the claimant is an insured, and there would otherwise be coverage for the claim.
- **.2** Claims for property damage to the Contractor's Work arising out of the products-completed operations hazard where the damaged Work or the Work out of which the damage arises was performed by a Subcontractor.
- **.3** Claims for bodily injury other than to employees of the insured.
- **.4** Claims for indemnity under Section 3.18 of the General Conditions arising out of injury to employees of the insured.
- **.5** Claims or loss excluded under a prior work endorsement or other similar exclusionary language.
- **.6** Claims or loss due to physical damage under a prior injury endorsement or similar exclusionary language.
- **.7** Claims related to residential, multi-family, or other habitational projects, if the Work is to be performed on such a project.
- **.8** Claims related to roofing, if the Work involves roofing.
- **.9** Claims related to exterior insulation finish systems (EIFS), synthetic stucco or similar exterior coatings or surfaces, if the Work involves such coatings or surfaces.
- **.10** Claims related to earth subsidence or movement, where the Work involves such hazards.
- **.11** Claims related to explosion, collapse and underground hazards, where the Work involves such hazards.

§ A.3.2.3 Automobile Liability covering vehicles owned, and non-owned vehicles used, by the Contractor, with policy limits of not less than One Million Dollars ($1,000,000.00) per accident, for bodily injury, death of any person, and property damage arising out of the ownership, maintenance and use of those motor vehicles along with any other statutorily required automobile coverage.

§ A.3.2.4 The Contractor may achieve the required limits and coverage for Commercial General Liability and Automobile Liability through a combination of primary and excess or umbrella liability insurance, provided such primary and excess or umbrella insurance policies result in the same or greater coverage as the coverages required under Section A.3.2.2 and A.3.2.3, and in no event shall any excess or umbrella liability insurance provide narrower coverage than the primary policy. The excess policy shall not require the exhaustion of the underlying limits only through the actual payment by the underlying insurers.

§ A.3.2.5 Workers' Compensation at statutory limits.

§ A.3.2.6 Employers' Liability with policy limits not less than Five Hundred Thousand Dollars ($500,000.00) each accident, One Million Dollars ($1,000,000.00) each employee, and Two Million Dollars ($2,000,000.00) policy limit.

~~**§ A.3.2.7** Jones Act, and the Longshore & Harbor Workers' Compensation Act, as required, if the Work involves hazards arising from work on or near navigable waterways, including vessels and docks.~~

~~**§ A.3.2.8** If the Contractor is required to furnish professional services as part of the Work, the Contractor shall procure Professional Liability insurance covering performance of the professional services, with policy limits of not less than « » ($ « ») per claim and « » ($ « ») in the aggregate.~~

~~**§ A.3.2.9** If the Work involves the transport, dissemination, use, or release of pollutants, the Contractor shall procure Pollution Liability insurance, with policy limits of not less than « » ($ « ») per claim and « » ($ « ») in the aggregate.~~

~~**§ A.3.2.10** Coverage under Sections A.3.2.8 and A.3.2.9 may be procured through a Combined Professional Liability and Pollution Liability insurance policy, with combined policy limits of not less than « » ($ « ») per claim and « » ($ « ») in the aggregate.~~

~~**§ A.3.2.11** Insurance for maritime liability risks associated with the operation of a vessel, if the Work requires such activities, with policy limits of not less than « » ($ « ») per claim and « » ($ « ») in the aggregate.~~

~~**§ A.3.2.12** Insurance for the use or operation of manned or unmanned aircraft, if the Work requires such activities, with policy limits of not less than « » ($ « ») per claim and « » ($ « ») in the aggregate.~~

DRAFT

AIA Document A101™–2017. Copyright © 1915, 1918, 1925, 1937, 1951, 1958, 1961, 1963, 1967, 1974, 1977, 1987, 1991, 1997, 2007 and 2017 by The American Institute of Architects. **All rights reserved. WARNING: This AIA® Document is protected by U.S. Copyright Law and International Treaties. Unauthorized reproduction or distribution of this AIA® Document, or any portion of it, may result in severe civil and criminal penalties, and will be prosecuted to the maximum extent possible under the law.**

§ A.3.3 Contractor's Other Insurance Coverage

§ A.3.3.1 Insurance selected and described in this Section A.3.3 shall be purchased from an insurance company or insurance companies lawfully authorized to issue insurance in the jurisdiction where the Project is located. The Contractor shall maintain the required insurance until the expiration of the period for correction of Work as set forth in Section 12.2.2 of the General Conditions. ~~, unless a different duration is stated below:~~

~~*(If the Contractor is required to maintain any of the types of insurance selected below for a duration other than the expiration of the period for correction of Work, state the duration.)*~~

§ A.3.3.2 The Contractor shall purchase and maintain the following types and limits of insurance in accordance with Section A.3.3.1.

(Select the types of insurance the Contractor is required to purchase and maintain by placing an X in the box(es) next to the description(s) of selected insurance. Where policy limits are provided, include the policy limit in the appropriate fill point.)

☒ **§ A.3.3.2.1** Property insurance of the same type and scope satisfying the requirements identified in Section A.2.3, which, if selected in this section A.3.3.2.1, **relieves the Owner of the responsibility to purchase and maintain such insurance** except insurance required by Section A.2.3.1.3 and Section A.2.3.3. The **Contractor shall comply** with all obligations of the Owner under Section A.2.3 except to the extent provided below. The Contractor shall disclose to the Owner the amount of any deductible, and the Owner shall be responsible for losses within the deductible. Upon request, the Contractor shall provide the Owner with a copy of the property insurance policy or policies required. The Owner shall adjust and settle the loss with the insurer and be the trustee of the proceeds of the property insurance in accordance with Article 11 of the General Conditions. ~~unless otherwise set forth below:~~

~~*(Where the Contractor's obligation to provide property insurance differs from the Owner's obligations as described under Section A.2.3, indicate such differences in the space below. Additionally, if a party other than the Owner will be responsible for adjusting and settling a loss with the insurer and acting as the trustee of the proceeds of property insurance in accordance with Article 11 of the General Conditions, indicate the responsible party below.)*~~

☐ ~~**§ A.3.3.2.2 Railroad Protective Liability Insurance**, with policy limits of not less than « » ($ « ») per claim and « » ($ « ») in the aggregate, for Work within fifty (50) feet of railroad property.~~

☐ ~~**§ A.3.3.2.3 Asbestos Abatement Liability Insurance**, with policy limits of not less than « » ($ « ») per claim and « » ($ « ») in the aggregate, for liability arising from the encapsulation, removal, handling, storage, transportation, and disposal of asbestos-containing materials.~~

☒ **§ A.3.3.2.4** Insurance for physical damage to property while it is in storage and in transit to the construction site on an "all-risks" completed value form.

☒ **§ A.3.3.2.5** Property insurance on an "all-risks" completed value form, covering property owned by the Contractor and used on the Project, including scaffolding and other equipment.

☐ ~~**§ A.3.3.2.6 Other Insurance**~~

~~*(List below any other insurance coverage to be provided by the Contractor and any applicable limits.)*~~

~~**Coverage**~~	~~**Limits**~~

§ A.3.4 Performance Bond and Payment Bond

The Contractor shall provide surety bonds, from a company or companies lawfully authorized to issue surety bonds in the jurisdiction where the Project is located, as follows:

(Specify type and penal sum of bonds.)

Type	Penal Sum ($0.00)
Payment Bond	Amount equal to 100% of the Contract Sum.
Performance Bond	Amount equal to 100% of the Contract Sum.

AIA Document A101™–2017. Copyright © 1915, 1918, 1925, 1937, 1951, 1958, 1961, 1963, 1967, 1974, 1977, 1987, 1991, 1997, 2007 and 2017 by The American Institute of Architects. **All rights reserved. WARNING: This AIA® Document is protected by U.S. Copyright Law and International Treaties. Unauthorized reproduction or distribution of this AIA® Document, or any portion of it, may result in severe civil and criminal penalties, and will be prosecuted to the maximum extent possible under the law.**

DRAFT

Payment and Performance Bonds shall be AIA Document A312™, Payment Bond and Performance Bond, or contain provisions identical to AIA Document A312™, current as of the date of this Agreement.

~~**ARTICLE A.4 SPECIAL TERMS AND CONDITIONS**~~

~~Special terms and conditions that modify this Insurance and Bonds Exhibit, if any, are as follows:~~

~~«–»~~

DRAFT

AIA Document A101™–2017. Copyright © 1915, 1918, 1925, 1937, 1951, 1958, 1961, 1963, 1967, 1974, 1977, 1987, 1991, 1997, 2007 and 2017 by The American Institute of Architects. **All rights reserved. WARNING: This AIA® Document is protected by U.S. Copyright Law and International Treaties. Unauthorized reproduction or distribution of this AIA® Document, or any portion of it, may result in severe civil and criminal penalties, and will be prosecuted to the maximum extent possible under the law.**

SECTION 00 61 13 – BOND FORMS

1.1 PERFORMANCE AND PAYMENT BOND

A. AIA Documents A312, Performance and Payment Bond Form, 2010 Edition, published by the American Institute of Architects, is hereby made a part of the Bidding Documents by reference.

B. Properly executed copies of these bond forms will become part of the Contract Documents.

END OF SECTION 00 61 13

SECTION 00 72 13 – GENERAL CONDITIONS

1.1 GENERAL CONDITIONS OF THE CONTRACT FOR CONSTRUCTION

A. AIA Document A201-2017, General Conditions of the Contract for Construction, is the General Conditions of the Contract. A copy of the General Conditions is included in the Project Manual.

B. Each article of the General Conditions remains in effect unless expressly amended or deleted by other contract documents.

END OF SECTION 00 72 13

AIA Document A201™ – 2017

General Conditions of the Contract for Construction

For the following Project:
(Name, location and detailed description)

Downtown Façade Improvements
Marshalltown, IA

THE OWNER:
(Name, legal status and address)

City of Marshalltown
24 North Center Street
Marshalltown, IA 50158
Phone: 641-754-5701
www.marshalltown-ia.gov

THE ARCHITECT:
(Name, legal status and address)

RDG Planning & Design, Inc.
301 Grand Avenue
Des Moines, IA 50309-1718
Phone: (515) 288-3414
www.rdgusa.com

RDG Project No.: R3005.009.00

TABLE OF ARTICLES

1 GENERAL PROVISIONS

2 OWNER

3 CONTRACTOR

4 ARCHITECT

5 SUBCONTRACTORS

6 CONSTRUCTION BY OWNER OR BY SEPARATE CONTRACTORS

7 CHANGES IN THE WORK

8 TIME

9 PAYMENTS AND COMPLETION

10 PROTECTION OF PERSONS AND PROPERTY

11 INSURANCE AND BONDS

12 UNCOVERING AND CORRECTION OF WORK

13 MISCELLANEOUS PROVISIONS

14 TERMINATION OR SUSPENSION OF THE CONTRACT

15 CLAIMS AND DISPUTES

INDEX
(Topics and numbers in bold are Section headings.)

Acceptance of Nonconforming Work
9.6.6, 9.9.3, **12.3**
Acceptance of Work
9.6.6, 9.8.2, 9.9.3, 9.10.1, 9.10.3, 12.3
Access to Work
3.16, 6.2.1, 12.1
Accident Prevention
10
Acts and Omissions
3.2, 3.3.2, 3.12.8, 3.18, 4.2.3, 8.3.1, 9.5.1, 10.2.5, 10.2.8, 13.3.2, 14.1, 15.1.2, 15.2
Addenda
1.1.1
Additional Costs, Claims for
3.7.4, 3.7.5, 10.3.2, 15.1.5
Additional Inspections and Testing
9.4.2, 9.8.3, 12.2.1, **13.4**
Additional Time, Claims for
3.2.4, 3.7.4, 3.7.5, 3.10.2, 8.3.2, **15.1.6**
Administration of the Contract
3.1.3, **4.2**, 9.4, 9.5
Advertisement or Invitation to Bid
1.1.1
Aesthetic Effect
4.2.13
Allowances
3.8
Applications for Payment
4.2.5, 7.3.9, 9.2, **9.3**, 9.4, 9.5.1, 9.5.4, 9.6.3, 9.7, 9.10
Approvals
2.1.1, 2.3.1, 2.5, 3.1.3, 3.10.2, 3.12.8, 3.12.9, 3.12.10.1, 4.2.7, 9.3.2, 13.4.1
Arbitration
8.3.1, 15.3.2, **15.4**
ARCHITECT
4
Architect, Definition of
4.1.1
Architect, Extent of Authority
2.5, 3.12.7, 4.1.2, 4.2, 5.2, 6.3, 7.1.2, 7.3.4, 7.4, 9.2, 9.3.1, 9.4, 9.5, 9.6.3, 9.8, 9.10.1, 9.10.3, 12.1, 12.2.1, 13.4.1, 13.4.2, 14.2.2, 14.2.4, 15.1.4, 15.2.1
Architect, Limitations of Authority and Responsibility
2.1.1, 3.12.4, 3.12.8, 3.12.10, 4.1.2, 4.2.1, 4.2.2, 4.2.3, 4.2.6, 4.2.7, 4.2.10, 4.2.12, 4.2.13, 5.2.1, 7.4, 9.4.2, 9.5.4, 9.6.4, 15.1.4, 15.2
Architect's Additional Services and Expenses
2.5, 12.2.1, 13.4.2, 13.4.3, 14.2.4
Architect's Administration of the Contract
3.1.3, 3.7.4, 15.2, 9.4.1, 9.5
Architect's Approvals
2.5, 3.1.3, 3.5, 3.10.2, 4.2.7
Architect's Authority to Reject Work
3.5, 4.2.6, 12.1.2, 12.2.1
Architect's Copyright
1.1.7, 1.5
Architect's Decisions
3.7.4, 4.2.6, 4.2.7, 4.2.11, 4.2.12, 4.2.13, 4.2.14, 6.3, 7.3.4, 7.3.9, 8.1.3, 8.3.1, 9.2, 9.4.1, 9.5, 9.8.4, 9.9.1, 13.4.2, 15.2
Architect's Inspections
3.7.4, 4.2.2, 4.2.9, 9.4.2, 9.8.3, 9.9.2, 9.10.1, 13.4
Architect's Instructions
3.2.4, 3.3.1, 4.2.6, 4.2.7, 13.4.2
Architect's Interpretations
4.2.11, 4.2.12
Architect's Project Representative
4.2.10
Architect's Relationship with Contractor
1.1.2, 1.5, 2.3.3, 3.1.3, 3.2.2, 3.2.3, 3.2.4, 3.3.1, 3.4.2, 3.5, 3.7.4, 3.7.5, 3.9.2, 3.9.3, 3.10, 3.11, 3.12, 3.16, 3.18, 4.1.2, 4.2, 5.2, 6.2.2, 7, 8.3.1, 9.2, 9.3, 9.4, 9.5, 9.7, 9.8, 9.9, 10.2.6, 10.3, 11.3, 12, 13.3.2, 13.4, 15.2
Architect's Relationship with Subcontractors
1.1.2, 4.2.3, 4.2.4, 4.2.6, 9.6.3, 9.6.4, 11.3
Architect's Representations
9.4.2, 9.5.1, 9.10.1
Architect's Site Visits
3.7.4, 4.2.2, 4.2.9, 9.4.2, 9.5.1, 9.9.2, 9.10.1, 13.4
Asbestos
10.3.1
Attorneys' Fees
3.18.1, 9.6.8, 9.10.2, 10.3.3
Award of Separate Contracts
6.1.1, 6.1.2
Award of Subcontracts and Other Contracts for Portions of the Work
5.2
Basic Definitions
1.1
Bidding Requirements
1.1.1
Binding Dispute Resolution
8.3.1, 9.7, 11.5, 13.1, 15.1.2, 15.1.3, 15.2.1, 15.2.5, 15.2.6.1, 15.3.1, 15.3.2, 15.3.3, 15.4.1
Bonds, Lien
7.3.4.4, 9.6.8, 9.10.2, 9.10.3
Bonds, Performance, and Payment
7.3.4.4, 9.6.7, 9.10.3, **11.1.2**, 11.1.3, **11.5**
Building Information Models Use and Reliance
1.8
Building Permit
3.7.1
Capitalization
1.3
Certificate of Substantial Completion
9.8.3, 9.8.4, 9.8.5
Certificates for Payment
4.2.1, 4.2.5, 4.2.9, 9.3.3, **9.4**, 9.5, 9.6.1, 9.6.6, 9.7, 9.10.1, 9.10.3, 14.1.1.3, 14.2.4, 15.1.4

Certificates of Inspection, Testing or Approval
13.4.4
Certificates of Insurance
9.10.2
Change Orders
1.1.1, 3.4.2, 3.7.4, 3.8.2.3, 3.11, 3.12.8, 4.2.8, 5.2.3, 7.1.2, 7.1.3, **7.2**, 7.3.2, 7.3.7, 7.3.9, 7.3.10, 8.3.1, 9.3.1.1, 9.10.3, 10.3.2, 11.2, 11.5, 12.1.2
Change Orders, Definition of
7.2.1
CHANGES IN THE WORK
2.2.2, 3.11, 4.2.8, 7, 7.2.1, 7.3.1, 7.4, 8.3.1, 9.3.1.1, 11.5
Claims, Definition of
15.1.1
Claims, Notice of
1.6.2, 15.1.3
CLAIMS AND DISPUTES
3.2.4, 6.1.1, 6.3, 7.3.9, 9.3.3, 9.10.4, 10.3.3, **15**, 15.4
Claims and Timely Assertion of Claims
15.4.1
Claims for Additional Cost
3.2.4, 3.3.1, 3.7.4, 7.3.9, 9.5.2, 10.2.5, 10.3.2, **15.1.5**
Claims for Additional Time
3.2.4, 3.3.1, 3.7.4, 6.1.1, 8.3.2, 9.5.2, 10.3.2, **15.1.6**
Concealed or Unknown Conditions, Claims for
3.7.4
Claims for Damages
3.2.4, 3.18, 8.3.3, 9.5.1, 9.6.7, 10.2.5, 10.3.3, 11.3, 11.3.2, 14.2.4, 15.1.7
Claims Subject to Arbitration
15.4.1
Cleaning Up
3.15, 6.3
Commencement of the Work, Conditions Relating to
2.2.1, 3.2.2, 3.4.1, 3.7.1, 3.10.1, 3.12.6, 5.2.1, 5.2.3, 6.2.2, 8.1.2, 8.2.2, 8.3.1, 11.1, 11.2, **15.1.5**
Commencement of the Work, Definition of
8.1.2
Communications
3.9.1, **4.2.4**
Completion, Conditions Relating to
3.4.1, 3.11, 3.15, 4.2.2, 4.2.9, 8.2, 9.4.2, 9.8, 9.9.1, 9.10, 12.2, 14.1.2, 15.1.2
COMPLETION, PAYMENTS AND
9
Completion, Substantial
3.10.1, 4.2.9, 8.1.1, 8.1.3, 8.2.3, 9.4.2, 9.8, 9.9.1, 9.10.3, 12.2, 15.1.2
Compliance with Laws
2.3.2, 3.2.3, 3.6, 3.7, 3.12.10, 3.13, 9.6.4, 10.2.2, 13.1, 13.3, 13.4.1, 13.4.2, 13.5, 14.1.1, 14.2.1.3, 15.2.8, 15.4.2, 15.4.3
Concealed or Unknown Conditions
3.7.4, 4.2.8, 8.3.1, 10.3
Conditions of the Contract
1.1.1, 6.1.1, 6.1.4
Consent, Written
3.4.2, 3.14.2, 4.1.2, 9.8.5, 9.9.1, 9.10.2, 9.10.3, 13.2, 15.4.4.2
Consolidation or Joinder
15.4.4
CONSTRUCTION BY OWNER OR BY SEPARATE CONTRACTORS
1.1.4, **6**
Construction Change Directive, Definition of
7.3.1
Construction Change Directives
1.1.1, 3.4.2, 3.11, 3.12.8, 4.2.8, 7.1.1, 7.1.2, 7.1.3, **7.3**, 9.3.1.1
Construction Schedules, Contractor's
3.10, 3.11, 3.12.1, 3.12.2, 6.1.3, 15.1.6.2
Contingent Assignment of Subcontracts
5.4, 14.2.2.2
Continuing Contract Performance
15.1.4
Contract, Definition of
1.1.2
CONTRACT, TERMINATION OR SUSPENSION OF THE
5.4.1.1, 5.4.2, 11.5, **14**
Contract Administration
3.1.3, 4, 9.4, 9.5
Contract Award and Execution, Conditions Relating to
3.7.1, 3.10, 5.2, 6.1
Contract Documents, Copies Furnished and Use of
1.5.2, 2.3.6, 5.3
Contract Documents, Definition of
1.1.1
Contract Sum
2.2.2, 2.2.4, 3.7.4, 3.7.5, 3.8, 3.10.2, 5.2.3, 7.3, 7.4, **9.1**, 9.2, 9.4.2, 9.5.1.4, 9.6.7, 9.7, 10.3.2, 11.5, 12.1.2, 12.3, 14.2.4, 14.3.2, 15.1.4.2, **15.1.5, 15.2.5**
Contract Sum, Definition of
9.1
Contract Time
1.1.4, 2.2.1, 2.2.2, 3.7.4, 3.7.5, 3.10.2, 5.2.3, 6.1.5, 7.2.1.3, 7.3.1, 7.3.5, 7.3.6, 7, 7, 7.3.10, 7.4, 8.1.1, 8.2.1, 8.2.3, 8.3.1, 9.5.1, 9.7, 10.3.2, 12.1.1, 12.1.2, 14.3.2, 15.1.4.2, 15.1.6.1, 15.2.5
Contract Time, Definition of
8.1.1
CONTRACTOR
3
Contractor, Definition of
3.1, 6.1.2
Contractor's Construction and Submittal Schedules
3.10, 3.12.1, 3.12.2, 4.2.3, 6.1.3, 15.1.6.2
Contractor's Employees

2.2.4, 3.3.2, 3.4.3, 3.8.1, 3.9, 3.18.2, 4.2.3, 4.2.6, 10.2, 10.3, 11.3, 14.1, 14.2.1.1
Contractor's Liability Insurance
11.1
Contractor's Relationship with Separate Contractors and Owner's Forces
3.12.5, 3.14.2, 4.2.4, 6, 11.3, 12.2.4
Contractor's Relationship with Subcontractors
1.2.2, 2.2.4, 3.3.2, 3.18.1, 3.18.2, 4.2.4, 5, 9.6.2, 9.6.7, 9.10.2, 11.2, 11.3, 11.4
Contractor's Relationship with the Architect
1.1.2, 1.5, 2.3.3, 3.1.3, 3.2.2, 3.2.3, 3.2.4, 3.3.1, 3.4.2, 3.5.1, 3.7.4, 3.10, 3.11, 3.12, 3.16, 3.18, 4.2, 5.2, 6.2.2, 7, 8.3.1, 9.2, 9.3, 9.4, 9.5, 9.7, 9.8, 9.9, 10.2.6, 10.3, 11.3, 12, 13.4, 15.1.3, 15.2.1
Contractor's Representations
3.2.1, 3.2.2, 3.5, 3.12.6, 6.2.2, 8.2.1, 9.3.3, 9.8.2
Contractor's Responsibility for Those Performing the Work
3.3.2, 3.18, 5.3, 6.1.3, 6.2, 9.5.1, 10.2.8
Contractor's Review of Contract Documents
3.2
Contractor's Right to Stop the Work
2.2.2, 9.7
Contractor's Right to Terminate the Contract
14.1
Contractor's Submittals
3.10, 3.11, 3.12, 4.2.7, 5.2.1, 5.2.3, 9.2, 9.3, 9.8.2, 9.8.3, 9.9.1, 9.10.2, 9.10.3
Contractor's Superintendent
3.9, 10.2.6
Contractor's Supervision and Construction Procedures
1.2.2, 3.3, 3.4, 3.12.10, 4.2.2, 4.2.7, 6.1.3, 6.2.4, 7.1.3, 7.3.4, 7.3.6, 8.2, 10, 12, 14, 15.1.4
Coordination and Correlation
1.2, 3.2.1, 3.3.1, 3.10, 3.12.6, 6.1.3, 6.2.1
Copies Furnished of Drawings and Specifications
1.5, 2.3.6, 3.11
Copyrights
1.5, **3.17**
Correction of Work
2.5, 3.7.3, 9.4.2, 9.8.2, 9.8.3, 9.9.1, 12.1.2, **12.2**, 12.3, 15.1.3.1, 15.1.3.2, 15.2.1
Correlation and Intent of the Contract Documents
1.2
Cost, Definition of
7.3.4
Costs
2.5, 3.2.4, 3.7.3, 3.8.2, 3.15.2, 5.4.2, 6.1.1, 6.2.3, 7.3.3.3, 7.3.4, 7.3.8, 7.3.9, 9.10.2, 10.3.2, 10.3.6, 11.2, 12.1.2, 12.2.1, 12.2.4, 13.4, 14
Cutting and Patching
3.14, 6.2.5
Damage to Construction of Owner or Separate Contractors
3.14.2, 6.2.4, 10.2.1.2, 10.2.5, 10.4, 12.2.4
Damage to the Work
3.14.2, 9.9.1, 10.2.1.2, 10.2.5, 10.4, 12.2.4
Damages, Claims for
3.2.4, 3.18, 6.1.1, 8.3.3, 9.5.1, 9.6.7, 10.3.3, 11.3.2, 11.3, 14.2.4, 15.1.7
Damages for Delay
6.2.3, 8.3.3, 9.5.1.6, 9.7, 10.3.2, 14.3.2
Date of Commencement of the Work, Definition of
8.1.2
Date of Substantial Completion, Definition of
8.1.3
Day, Definition of
8.1.4
Decisions of the Architect
3.7.4, 4.2.6, 4.2.7, 4.2.11, 4.2.12, 4.2.13, 6.3, 7.3.4, 7.3.9, 8.1.3, 8.3.1, 9.2, 9.4, 9.5.1, 9.8.4, 9.9.1, 13.4.2, 14.2.2, 14.2.4, 15.1, 15.2
Decisions to Withhold Certification
9.4.1, **9.5**, 9.7, 14.1.1.3
Defective or Nonconforming Work, Acceptance, Rejection and Correction of
2.5, 3.5, 4.2.6, 6.2.3, 9.5.1, 9.5.3, 9.6.6, 9.8.2, 9.9.3, 9.10.4, 12.2.1
Definitions
1.1, 2.1.1, 3.1.1, 3.5, 3.12.1, 3.12.2, 3.12.3, 4.1.1, 5.1, 6.1.2, 7.2.1, 7.3.1, 8.1, 9.1, 9.8.1, 15.1.1
Delays and Extensions of Time
3.2, 3.7.4, 5.2.3, 7.2.1, 7.3.1, **7.4, 8.3**, 9.5.1, **9.7**, 10.3.2, **10.4,** 14.3.2, **15.1.6**, 15.2.5
Digital Data Use and Transmission
1.7
Disputes
6.3, 7.3.9, 15.1, 15.2
Documents and Samples at the Site
3.11
Drawings, Definition of
1.1.5
Drawings and Specifications, Use and Ownership of
3.11
Effective Date of Insurance
8.2.2
Emergencies
10.4, 14.1.1.2, **15.1.5**
Employees, Contractor's
3.3.2, 3.4.3, 3.8.1, 3.9, 3.18.2, 4.2.3, 4.2.6, 10.2, 10.3.3, 11.3, 14.1, 14.2.1.1
Equipment, Labor, or Materials
1.1.3, 1.1.6, 3.4, 3.5, 3.8.2, 3.8.3, 3.12, 3.13, 3.15.1, 4.2.6, 4.2.7, 5.2.1, 6.2.1, 7.3.4, 9.3.2, 9.3.3, 9.5.1.3, 9.10.2, 10.2.1, 10.2.4, 14.2.1.1, 14.2.1.2
Execution and Progress of the Work
1.1.3, 1.2.1, 1.2.2, 2.3.4, 2.3.6, 3.1, 3.3.1, 3.4.1, 3.7.1, 3.10.1, 3.12, 3.14, 4.2, 6.2.2, 7.1.3, 7.3.6, 8.2, 9.5.1, 9.9.1, 10.2, 10.3, 12.1, 12.2, 14.2, 14.3.1, 15.1.4
Extensions of Time
3.2.4, 3.7.4, 5.2.3, 7.2.1, 7.3, 7.4, 9.5.1, 9.7, 10.3.2, 10.4, 14.3, 15.1.6, **15.2.5**

Failure of Payment
9.5.1.3, **9.7,** 9.10.2, 13.5, 14.1.1.3, 14.2.1.2
Faulty Work
(See Defective or Nonconforming Work)
Final Completion and Final Payment
4.2.1, 4.2.9, 9.8.2, **9.10**, 12.3, 14.2.4, 14.4.3
Financial Arrangements, Owner's
2.2.1, 13.2.2, 14.1.1.4
GENERAL PROVISIONS
1
Governing Law
13.1
Guarantees (See Warranty)
Hazardous Materials and Substances
10.2.4, **10.3**
Identification of Subcontractors and Suppliers
5.2.1
Indemnification
3.17, **3.18**, 9.6.8, 9.10.2, 10.3.3, 11.3
Information and Services Required of the Owner
2.1.2, 2.2, 2.3, 3.2.2, 3.12.10.1, 6.1.3, 6.1.4, 6.2.5, 9.6.1, 9.9.2, 9.10.3, 10.3.3, 11.2, 13.4.1, 13.4.2, 14.1.1.4, 14.1.4, 15.1.4
Initial Decision
15.2
Initial Decision Maker, Definition of
1.1.8
Initial Decision Maker, Decisions
14.2.4, 15.1.4.2, 15.2.1, 15.2.2, 15.2.3, 15.2.4, 15.2.5
Initial Decision Maker, Extent of Authority
14.2.4, 15.1.4.2, 15.2.1, 15.2.2, 15.2.3, 15.2.4, 15.2.5
Injury or Damage to Person or Property
10.2.8, 10.4
Inspections
3.1.3, 3.3.3, 3.7.1, 4.2.2, 4.2.6, 4.2.9, 9.4.2, 9.8.3, 9.9.2, 9.10.1, 12.2.1, 13.4
Instructions to Bidders
1.1.1
Instructions to the Contractor
3.2.4, 3.3.1, 3.8.1, 5.2.1, 7, 8.2.2, 12, 13.4.2
Instruments of Service, Definition of
1.1.7
Insurance
6.1.1, 7.3.4, 8.2.2, 9.3.2, 9.8.4, 9.9.1, 9.10.2, 10.2.5, **11**
Insurance, Notice of Cancellation or Expiration
11.1.4, 11.2.3
Insurance, Contractor's Liability
11.1
Insurance, Effective Date of
8.2.2, 14.4.2
Insurance, Owner's Liability
11.2
Insurance, Property
10.2.5, 11.2, 11.4, 11.5
Insurance, Stored Materials
9.3.2
INSURANCE AND BONDS
11
Insurance Companies, Consent to Partial Occupancy
9.9.1
Insured loss, Adjustment and Settlement of
11.5
Intent of the Contract Documents
1.2.1, 4.2.7, 4.2.12, 4.2.13
Interest
13.5
Interpretation
1.1.8, 1.2.3, **1.4**, 4.1.1, 5.1, 6.1.2, 15.1.1
Interpretations, Written
4.2.11, 4.2.12
Judgment on Final Award
15.4.2
Labor and Materials, Equipment
1.1.3, 1.1.6, **3.4**, 3.5, 3.8.2, 3.8.3, 3.12, 3.13, 3.15.1, 5.2.1, 6.2.1, 7.3.4, 9.3.2, 9.3.3, 9.5.1.3, 9.10.2, 10.2.1, 10.2.4, 14.2.1.1, 14.2.1.2
Labor Disputes
8.3.1
Laws and Regulations
1.5, 2.3.2, 3.2.3, 3.2.4, 3.6, 3.7, 3.12.10, 3.13, 9.6.4, 9.9.1, 10.2.2, 13.1, 13.3.1, 13.4.2, 13.5, 14, 15.2.8, 15.4
Liens
2.1.2, 9.3.1, 9.3.3, 9.6.8, 9.10.2, 9.10.4, 15.2.8
Limitations, Statutes of
12.2.5, 15.1.2, 15.4.1.1
Limitations of Liability
3.2.2, 3.5, 3.12.10, 3.12.10.1, 3.17, 3.18.1, 4.2.6, 4.2.7, 6.2.2, 9.4.2, 9.6.4, 9.6.7, 9.6.8, 10.2.5, 10.3.3, 11.3, 12.2.5, 13.3.1
Limitations of Time
2.1.2, 2.2, 2.5, 3.2.2, 3.10, 3.11, 3.12.5, 3.15.1, 4.2.7, 5.2, 5.3, 5.4.1, 6.2.4, 7.3, 7.4, 8.2, 9.2, 9.3.1, 9.3.3, 9.4.1, 9.5, 9.6, 9.7, 9.8, 9.9, 9.10, 12.2, 13.4, 14, 15, 15.1.2, 15.1.3, 15.1.5
Materials, Hazardous
10.2.4, **10.3**
Materials, Labor, Equipment and
1.1.3, 1.1.6, 3.4.1, 3.5, 3.8.2, 3.8.3, 3.12, 3.13, 3.15.1, 5.2.1, 6.2.1, 7.3.4, 9.3.2, 9.3.3, 9.5.1.3, 9.10.2, 10.2.1.2, 10.2.4, 14.2.1.1, 14.2.1.2
Means, Methods, Techniques, Sequences and Procedures of Construction
3.3.1, 3.12.10, 4.2.2, 4.2.7, 9.4.2
Mechanic's Lien
2.1.2, 9.3.1, 9.3.3, 9.6.8, 9.10.2, 9.10.4, 15.2.8
Mediation
8.3.1, 15.1.3.2, 15.2.1, 15.2.5, 15.2.6, **15.3**, 15.4.1, 15.4.1.1
Minor Changes in the Work
1.1.1, 3.4.2, 3.12.8, 4.2.8, 7.1, **7.4**
MISCELLANEOUS PROVISIONS
13

Modifications, Definition of
1.1.1
Modifications to the Contract
1.1.1, 1.1.2, 2.5, 3.11, 4.1.2, 4.2.1, 5.2.3, 7, 8.3.1, 9.7, 10.3.2
Mutual Responsibility
6.2
Nonconforming Work, Acceptance of
9.6.6, 9.9.3, **12.3**
Nonconforming Work, Rejection and Correction of
2.4, 2.5, 3.5, 4.2.6, 6.2.4, 9.5.1, 9.8.2, 9.9.3, 9.10.4, 12.2
Notice
1.6, 1.6.1, 1.6.2, 2.1.2, 2.2.2., 2.2.3, 2.2.4, 2.5, 3.2.4, 3.3.1, 3.7.4, 3.7.5, 3.9.2, 3.12.9, 3.12.10, 5.2.1, 7.4, 8.2.2 9.6.8, 9.7, 9.10.1, 10.2.8, 10.3.2, 11.5, 12.2.2.1, 13.4.1, 13.4.2, 14.1, 14.2.2, 14.4.2, 15.1.3, 15.1.5, 15.1.6, 15.4.1
Notice of Cancellation or Expiration of Insurance
11.1.4, 11.2.3
Notice of Claims
1.6.2, 2.1.2, 3.7.4, 9.6.8, 10.2.8, **15.1.3**, 15.1.5, 15.1.6, 15.2.8, 15.3.2, 15.4.1
Notice of Testing and Inspections
13.4.1, 13.4.2
Observations, Contractor's
3.2, 3.7.4
Occupancy
2.3.1, 9.6.6, 9.8
Orders, Written
1.1.1, 2.4, 3.9.2, 7, 8.2.2, 11.5, 12.1, 12.2.2.1, 13.4.2, 14.3.1
OWNER
2
Owner, Definition of
2.1.1
Owner, Evidence of Financial Arrangements
2.2, 13.2.2, 14.1.1.4
Owner, Information and Services Required of the
2.1.2, **2.2**, 2.3, 3.2.2, 3.12.10, 6.1.3, 6.1.4, 6.2.5, 9.3.2, 9.6.1, 9.6.4, 9.9.2, 9.10.3, 10.3.3, 11.2, 13.4.1, 13.4.2, 14.1.1.4, 14.1.4, 15.1.4
Owner's Authority
1.5, 2.1.1, 2.3.32.4, 2.5, 3.4.2, 3.8.1, 3.12.10, 3.14.2, 4.1.2, 4.2.4, 4.2.9, 5.2.1, 5.2.4, 5.4.1, 6.1, 6.3, 7.2.1, 7.3.1, 8.2.2, 8.3.1, 9.3.2, 9.5.1, 9.6.4, 9.9.1, 9.10.2, 10.3.2, 11.4, 11.5, 12.2.2, 12.3, 13.2.2, 14.3, 14.4, 15.2.7
Owner's Insurance
11.2
Owner's Relationship with Subcontractors
1.1.2, 5.2, 5.3, 5.4, 9.6.4, 9.10.2, 14.2.2
Owner's Right to Carry Out the Work
2.5, 14.2.2
Owner's Right to Clean Up
6.3
Owner's Right to Perform Construction and to Award Separate Contracts
6.1
Owner's Right to Stop the Work
2.4
Owner's Right to Suspend the Work
14.3
Owner's Right to Terminate the Contract
14.2, 14.4
Ownership and Use of Drawings, Specifications and Other Instruments of Service
1.1.1, 1.1.6, 1.1.7, **1.5**, 2.3.6, 3.2.2, 3.11, 3.17, 4.2.12, 5.3
Partial Occupancy or Use
9.6.6, **9.9**
Patching, Cutting and
3.14, 6.2.5
Patents
3.17
Payment, Applications for
4.2.5, 7.3.9, 9.2, **9.3**, 9.4, 9.5, 9.6.3, 9.7, 9.8.5, 9.10.1, 14.2.3, 14.2.4, 14.4.3
Payment, Certificates for
4.2.5, 4.2.9, 9.3.3, **9.4**, 9.5, 9.6.1, 9.6.6, 9.7, 9.10.1, 9.10.3, 14.1.1.3, 14.2.4
Payment, Failure of
9.5.1.3, **9.7**, 9.10.2, 13.5, 14.1.1.3, 14.2.1.2
Payment, Final
4.2.1, 4.2.9, **9.10**, 12.3, 14.2.4, 14.4.3
Payment Bond, Performance Bond and
7.3.4.4, 9.6.7, 9.10.3, **11.1.2**
Payments, Progress
9.3, **9.6**, 9.8.5, 9.10.3, 14.2.3, 15.1.4
PAYMENTS AND COMPLETION
9
Payments to Subcontractors
5.4.2, 9.5.1.3, 9.6.2, 9.6.3, 9.6.4, 9.6.7, 14.2.1.2
PCB
10.3.1
Performance Bond and Payment Bond
7.3.4.4, 9.6.7, 9.10.3, **11.1.2**
Permits, Fees, Notices and Compliance with Laws
2.3.1, **3.7**, 3.13, 7.3.4.4, 10.2.2
PERSONS AND PROPERTY, PROTECTION OF
10
Polychlorinated Biphenyl
10.3.1
Product Data, Definition of
3.12.2
Product Data and Samples, Shop Drawings
3.11, **3.12**, 4.2.7
Progress and Completion
4.2.2, **8.2**, 9.8, 9.9.1, 14.1.4, 15.1.4
Progress Payments
9.3, **9.6**, 9.8.5, 9.10.3, 14.2.3, 15.1.4
Project, Definition of
1.1.4

Project Representatives
4.2.10
Property Insurance
10.2.5, **11.2**
Proposal Requirements
1.1.1
PROTECTION OF PERSONS AND PROPERTY
10
Regulations and Laws
1.5, 2.3.2, 3.2.3, 3.6, 3.7, 3.12.10, 3.13, 9.6.4, 9.9.1, 10.2.2, 13.1, 13.3, 13.4.1, 13.4.2, 13.5, 14, 15.2.8, 15.4
Rejection of Work
4.2.6, 12.2.1
Releases and Waivers of Liens
9.3.1, 9.10.2

Representations
3.2.1, 3.5, 3.12.6, 8.2.1, 9.3.3, 9.4.2, 9.5.1, 9.10.1
Representatives
2.1.1, 3.1.1, 3.9, 4.1.1, 4.2.10, 13.2.1
Responsibility for Those Performing the Work
3.3.2, 3.18, 4.2.2, 4.2.3, 5.3, 6.1.3, 6.2, 6.3, 9.5.1, 10
Retainage
9.3.1, 9.6.2, 9.8.5, 9.9.1, 9.10.2, 9.10.3
Review of Contract Documents and Field Conditions by Contractor
3.2, 3.12.7, 6.1.3
Review of Contractor's Submittals by Owner and Architect
3.10.1, 3.10.2, 3.11, 3.12, 4.2, 5.2, 6.1.3, 9.2, 9.8.2
Review of Shop Drawings, Product Data and Samples by Contractor
3.12
Rights and Remedies
1.1.2, 2.4, 2.5, 3.5, 3.7.4, 3.15.2, 4.2.6, 5.3, 5.4, 6.1, 6.3, 7.3.1, 8.3, 9.5.1, 9.7, 10.2.5, 10.3, 12.2.1, 12.2.2, 12.2.4, **13.3,** 14, 15.4
Royalties, Patents and Copyrights
3.17
Rules and Notices for Arbitration
15.4.1
Safety of Persons and Property
10.2, 10.4
Safety Precautions and Programs
3.3.1, 4.2.2, 4.2.7, 5.3, **10.1**, 10.2, 10.4
Samples, Definition of
3.12.3
Samples, Shop Drawings, Product Data and
3.11, **3.12**, 4.2.7
Samples at the Site, Documents and
3.11
Schedule of Values
9.2, 9.3.1
Schedules, Construction
3.10, 3.12.1, 3.12.2, 6.1.3, 15.1.6.2
Separate Contracts and Contractors
1.1.4, 3.12.5, 3.14.2, 4.2.4, 4.2.7, 6, 8.3.1, 12.1.2
Separate Contractors, Definition of
6.1.1
Shop Drawings, Definition of
3.12.1
Shop Drawings, Product Data and Samples
3.11, **3.12**, 4.2.7
Site, Use of
3.13, 6.1.1, 6.2.1
Site Inspections
3.2.2, 3.3.3, 3.7.1, 3.7.4, 4.2, 9.9.2, 9.4.2, 9.10.1, 13.4
Site Visits, Architect's
3.7.4, 4.2.2, 4.2.9, 9.4.2, 9.5.1, 9.9.2, 9.10.1, 13.4
Special Inspections and Testing
4.2.6, 12.2.1, 13.4
Specifications, Definition of
1.1.6

Specifications
1.1.1, **1.1.6**, 1.2.2, 1.5, 3.12.10, 3.17, 4.2.14
Statute of Limitations
15.1.2, 15.4.1.1
Stopping the Work
2.2.2, 2.4, 9.7, 10.3, 14.1
Stored Materials
6.2.1, 9.3.2, 10.2.1.2, 10.2.4
Subcontractor, Definition of
5.1.1
SUBCONTRACTORS
5
Subcontractors, Work by
1.2.2, 3.3.2, 3.12.1, 3.18, 4.2.3, 5.2.3, 5.3, 5.4, 9.3.1.2, 9.6.7
Subcontractual Relations
5.3, 5.4, 9.3.1.2, 9.6, 9.10, 10.2.1, 14.1, 14.2.1
Submittals
3.10, 3.11, 3.12, 4.2.7, 5.2.1, 5.2.3, 7.3.4, 9.2, 9.3, 9.8, 9.9.1, 9.10.2, 9.10.3
Submittal Schedule
3.10.2, 3.12.5, 4.2.7
Subrogation, Waivers of
6.1.1, **11.3**
Substances, Hazardous
10.3
Substantial Completion
4.2.9, 8.1.1, 8.1.3, 8.2.3, 9.4.2, **9.8**, 9.9.1, 9.10.3, 12.2, 15.1.2
Substantial Completion, Definition of
9.8.1
Substitution of Subcontractors
5.2.3, 5.2.4
Substitution of Architect
2.3.3
Substitutions of Materials
3.4.2, 3.5, 7.3.8
Sub-subcontractor, Definition of
5.1.2
Subsurface Conditions

3.7.4
Successors and Assigns
13.2
Superintendent
3.9, 10.2.6
Supervision and Construction Procedures
1.2.2, **3.3**, 3.4, 3.12.10, 4.2.2, 4.2.7, 6.1.3, 6.2.4, 7.1.3, 7.3.4, 8.2, 8.3.1, 9.4.2, 10, 12, 14, 15.1.4
Suppliers
1.5, 3.12.1, 4.2.4, 4.2.6, 5.2.1, 9.3, 9.4.2, 9.5.4, 9.6, 9.10.5, 14.2.1
Surety
5.4.1.2, 9.6.8, 9.8.5, 9.10.2, 9.10.3, 11.1.2, 14.2.2, 15.2.7
Surety, Consent of
9.8.5, 9.10.2, 9.10.3
Surveys
1.1.7, 2.3.4

Suspension by the Owner for Convenience
14.3
Suspension of the Work
3.7.5, 5.4.2, 14.3
Suspension or Termination of the Contract
5.4.1.1, 14
Taxes
3.6, 3.8.2.1, 7.3.4.4
Termination by the Contractor
14.1, 15.1.7
Termination by the Owner for Cause
5.4.1.1, **14.2**, 15.1.7
Termination by the Owner for Convenience
14.4
Termination of the Architect
2.3.3
Termination of the Contractor Employment
14.2.2
TERMINATION OR SUSPENSION OF THE CONTRACT
14
Tests and Inspections
3.1.3, 3.3.3, 3.7.1, 4.2.2, 4.2.6, 4.2.9, 9.4.2, 9.8.3, 9.9.2, 9.10.1, 10.3.2, 12.2.1, **13.4**
TIME
8
Time, Delays and Extensions of
3.2.4, 3.7.4, 5.2.3, 7.2.1, 7.3.1, 7.4, **8.3**, 9.5.1, 9.7, 10.3.2, 10.4, 14.3.2, 15.1.6, 15.2.5
Time Limits
2.1.2, 2.2, 2.5, 3.2.2, 3.10, 3.11, 3.12.5, 3.15.1, 4.2, 5.2, 5.3, 5.4, 6.2.4, 7.3, 7.4, 8.2, 9.2, 9.3.1, 9.3.3, 9.4.1, 9.5, 9.6, 9.7, 9.8, 9.9, 9.10, 12.2, 13.4, 14, 15.1.2, 15.1.3, 15.4
Time Limits on Claims
3.7.4, 10.2.8, 15.1.2, 15.1.3
Title to Work
9.3.2, 9.3.3
UNCOVERING AND CORRECTION OF WORK
12
Uncovering of Work
12.1
Unforeseen Conditions, Concealed or Unknown
3.7.4, 8.3.1, 10.3
Unit Prices
7.3.3.2, 9.1.2
Use of Documents
1.1.1, 1.5, 2.3.6, 3.12.6, 5.3
Use of Site
3.13, 6.1.1, 6.2.1
Values, Schedule of
9.2, 9.3.1
Waiver of Claims by the Architect
13.3.2
Waiver of Claims by the Contractor
9.10.5, 13.3.2, **15.1.7**
Waiver of Claims by the Owner
9.9.3, 9.10.3, 9.10.4, 12.2.2.1, 13.3.2, 14.2.4, **15.1.7**
Waiver of Consequential Damages
14.2.4, 15.1.7
Waiver of Liens
9.3, 9.10.2, 9.10.4
Waivers of Subrogation
6.1.1, **11.3**
Warranty
3.5, 4.2.9, 9.3.3, 9.8.4, 9.9.1, 9.10.2, 9.10.4, 12.2.2, 15.1.2
Weather Delays
8.3, 15.1.6.2
Work, Definition of
1.1.3
Written Consent
1.5.2, 3.4.2, 3.7.4, 3.12.8, 3.14.2, 4.1.2, 9.3.2, 9.10.3, 13.2, 13.3.2, 15.4.4.2
Written Interpretations
4.2.11, 4.2.12
Written Orders
1.1.1, 2.4, 3.9, 7, 8.2.2, 12.1, 12.2, 13.4.2, 14.3.1

ARTICLE 1 GENERAL PROVISIONS

§ 1.1 Basic Definitions

§ 1.1.1 The Contract Documents

The Contract Documents are enumerated in the Agreement between the Owner and Contractor (hereinafter the Agreement) and consist of the Agreement, Conditions of the Contract (General, Supplementary and other Conditions), Drawings, Specifications, Addenda issued prior to execution of the Contract, other documents listed in the Agreement, and Modifications issued after execution of the Contract. A Modification is (1) a written amendment to the Contract signed by both parties, (2) a Change Order, (3) a Construction Change Directive, or (4) a written order for a minor change in the Work issued by the Architect. Unless specifically enumerated in the Agreement, the Contract Documents do not include the advertisement or invitation to bid, Instructions to Bidders, sample forms, other information furnished by the Owner in anticipation of receiving bids or proposals, the Contractor's bid or proposal, or portions of Addenda relating to bidding or proposal requirements.

§ 1.1.2 The Contract

The Contract Documents form the Contract for Construction. The Contract represents the entire and integrated agreement between the parties hereto and supersedes prior negotiations, representations, or agreements, either written or oral. The Contract may be amended or modified only by a Modification. The Contract Documents shall not be construed to create a contractual relationship of any kind (1) between the Contractor and the Architect or the Architect's consultants, (2) between the Owner and a Subcontractor or a Sub- subcontractor, (3) between the Owner and the Architect or the Architect's consultants, or (4) between any persons or entities other than the Owner and the Contractor. The Architect shall, however, be entitled to performance and enforcement of obligations under the Contract intended to facilitate performance of the Architect's duties.

§ 1.1.3 The Work

The term "Work" means the construction and services required by the Contract Documents, whether completed or partially completed, and includes all other labor, materials, equipment, and services provided or to be provided by the Contractor to fulfill the Contractor's obligations. The Work may constitute the whole or a part of the Project.

§ 1.1.4 The Project

The Project is the total construction of which the Work performed under the Contract Documents may be the whole or a part and which may include construction by the Owner and by Separate Contractors.

§ 1.1.5 The Drawings

The Drawings are the graphic and pictorial portions of the Contract Documents showing the design, location and dimensions of the Work, generally including plans, elevations, sections, details, schedules, and diagrams.

§ 1.1.6 The Specifications

The Specifications are that portion of the Contract Documents consisting of the written requirements for materials, equipment, systems, standards and workmanship for the Work, and performance of related services.

§ 1.1.7 Instruments of Service

Instruments of Service are representations, in any medium of expression now known or later developed, of the tangible and intangible creative work performed by the Architect and the Architect's consultants under their respective professional services agreements. Instruments of Service may include, without limitation, studies, surveys, models, sketches, drawings, specifications, and other similar materials.

§ 1.1.8 Initial Decision Maker

The Initial Decision Maker is the person identified in the Agreement to render initial decisions on Claims in accordance with Section 15.2. The Initial Decision Maker shall not show partiality to the Owner or Contractor and shall not be liable for results of interpretations or decisions rendered in good faith.

§ 1.2 Correlation and Intent of the Contract Documents

§ 1.2.1 The intent of the Contract Documents is to include all items necessary for the proper execution and completion of the Work by the Contractor. The Contract Documents are complementary, and what is required by one shall be as binding as if required by all; performance by the Contractor shall be required only to the extent consistent with the Contract Documents and reasonably inferable from them as being necessary to produce the indicated results.

§ 1.2.1.1 The invalidity of any provision of the Contract Documents shall not invalidate the Contract or its remaining provisions. If it is determined that any provision of the Contract Documents violates any law, or is otherwise invalid or unenforceable, then that provision shall be revised to the extent necessary to make that provision legal and enforceable. In such case the Contract Documents shall be construed, to the fullest extent permitted by law, to give effect to the parties' intentions and purposes in executing the Contract.

§ 1.2.2 Organization of the Specifications into divisions, sections and articles, and arrangement of Drawings shall not control the Contractor in dividing the Work among Subcontractors or in establishing the extent of Work to be performed by any trade.

§ 1.2.3 Unless otherwise stated in the Contract Documents, words that have well-known technical or construction industry meanings are used in the Contract Documents in accordance with such recognized meanings.

§ 1.2.4 The terms and conditions of the Contract Documents, including but not limited to the General Conditions, the Supplementary Conditions, and Division 01 Specification Sections, apply to all Sections of the Specifications.

§ 1.3 Capitalization
Terms capitalized in these General Conditions include those that are (1) specifically defined, (2) the titles of numbered articles, or (3) the titles of other documents published by the American Institute of Architects.

§ 1.4 Interpretation
In the interest of brevity the Contract Documents frequently omit modifying words such as "all" and "any" and articles such as "the" and "an," but the fact that a modifier or an article is absent from one statement and appears in another is not intended to affect the interpretation of either statement.

§ 1.5 Ownership and Use of Drawings, Specifications, and Other Instruments of Service
§ 1.5.1 The Architect and the Architect's consultants shall be deemed the authors and owners of their respective Instruments of Service, including the Drawings and Specifications, and retain all common law, statutory, and other reserved rights in their Instruments of Service, including copyrights. The Contractor, Subcontractors, Sub-subcontractors, and suppliers shall not own or claim a copyright in the Instruments of Service. Submittal or distribution to meet official regulatory requirements or for other purposes in connection with the Project is not to be construed as publication in derogation of the Architect's or Architect's consultants' reserved rights.

§ 1.5.2 The Contractor, Subcontractors, Sub-subcontractors, and suppliers are authorized to use and reproduce the Instruments of Service provided to them, subject to any protocols established pursuant to Sections 1.7 and 1.8, solely and exclusively for execution of the Work. All copies made under this authorization shall bear the copyright notice, if any, shown on the Instruments of Service. The Contractor, Subcontractors, Sub-subcontractors, and suppliers may not use the Instruments of Service on other projects or for additions to the Project outside the scope of the Work without the specific written consent of the Owner, Architect, and the Architect's consultants.

§ 1.6 Notice
§ 1.6.1 Except as otherwise provided in Section 1.6.2, where the Contract Documents require one party to notify or give notice to the other party, such notice shall be provided in writing to the designated representative of the party to whom the notice is addressed and shall be deemed to have been duly served if delivered in person, by mail, by courier, or by electronic transmission if a method for electronic transmission is set forth in the Agreement.

§ 1.6.2 Notice of Claims as provided in Section 15.1.3 shall be provided in writing and shall be deemed to have been duly served only if delivered to the designated representative of the party to whom the notice is addressed by certified or registered mail, or by courier providing proof of delivery.

§ 1.7 Digital Data Use and Transmission
The parties shall agree upon protocols governing the transmission and use of Instruments of Service or any other information or documentation in digital form. The parties will use AIA Document E203™–2013, Building Information Modeling and Digital Data Exhibit, to establish the protocols for the development, use, transmission, and exchange of digital data.

§ 1.7.1 Instruments of Service transmitted in digital form or any other information or documentation transmitted in digital form are not Contract Documents. Discrepancies may exist between digital data files and corresponding hard-copy Contract Documents including, but not limited to, subsequent modifications to the Contract Documents. In the event of a conflict between the Contract Documents and the digital data files, the Contract Documents shall govern. Users of digital data files shall be responsible for confirming the accuracy and completeness of the files relative to current Contract Documents.

§ 1.7.2 Data contained in Architect provided digital data files, at the time of transfer to third parties, are part of the Architect's Instruments of Service and shall not be used by anyone receiving this data for any purpose other than as a convenience in the preparation of shop drawings for the referenced project. Any other use or reuse by others is prohibited. Users of these digital data files shall agree to make no claim and hereby waive, to the fullest extent permitted by law, any claim or cause of action or any nature against the Architect, its officers, consultants, directors, agents, and sub-consultants, and any employees of them, that may arise out of or in connection with use of these digital data files. Furthermore, users shall, to the fullest extent permitted by law, defend, indemnify and hold harmless the Architect, its officers, consultants, directors, agents, and sub-consultants, and any employees of them, from and against any and all claims, causes of action, damages, liabilities and costs, including, but not limited to, reasonable attorneys' fees and defense costs, arising out of or resulting from the use of these digital data files.

§ 1.8 Building Information Models Use and Reliance
Any use of, or reliance on, all or a portion of a building information model without agreement to protocols governing the use of, and reliance on, the information contained in the model and without having those protocols set forth in AIA Document E203™– 2013, Building Information Modeling and Digital Data Exhibit, and the requisite ~~AIA Document G202™–2013, Project Building Information Modeling Protocol Form~~ RDG BIM Project Execution Plan, shall be at the using or relying party's sole risk and without liability to the other party and its contractors or consultants, the authors of, or contributors to, the building information model, and each of their agents and employees.

ARTICLE 2 OWNER

§ 2.1 General
§ 2.1.1 The Owner is the person or entity identified as such in the Agreement and is referred to throughout the Contract Documents as if singular in number. The Owner shall designate in writing a representative who shall have express authority to bind the Owner with respect to all matters requiring the Owner's approval or authorization. Except as otherwise provided in Section 4.2.1, the Architect does not have such authority. The term "Owner" means the Owner or the Owner's authorized representative.

§ 2.1.2 The Owner shall furnish to the Contractor, within fifteen days after receipt of a written request, information necessary and relevant for the Contractor to evaluate, give notice of, or enforce mechanic's lien rights. Such information shall include a correct statement of the record legal title to the property on which the Project is located, usually referred to as the site, and the Owner's interest therein.

§ 2.2 Evidence of the Owner's Financial Arrangements
§ 2.2.1 Prior to commencement of the Work and upon written request by the Contractor, the Owner shall furnish to the Contractor reasonable evidence that the Owner has made financial arrangements to fulfill the Owner's obligations under the Contract. The Contractor shall have no obligation to commence the Work until the Owner provides such evidence. If commencement of the Work is delayed under this Section 2.2.1, the Contract Time shall be extended appropriately.

§ 2.2.2 Following commencement of the Work and upon written request by the Contractor, the Owner shall furnish to the Contractor reasonable evidence that the Owner has made financial arrangements to fulfill the Owner's obligations under the Contract only if (1) the Owner fails to make payments to the Contractor as the Contract Documents require; (2) the Contractor identifies in writing a reasonable concern regarding the Owner's ability to make payment when due; or (3) a change in the Work materially changes the Contract Sum. If the Owner fails to provide such evidence, as required, within fourteen days of the Contractor's request, the Contractor may immediately stop the Work and, in that event, shall notify the Owner that the Work has stopped. However, if the request is made because a change in the Work materially changes the Contract Sum under (3) above, the Contractor may immediately stop only that portion of the Work affected by the change until reasonable evidence is provided. If the Work is stopped under this Section 2.2.2, the Contract Time shall be extended appropriately and the Contract Sum shall be increased by the amount of the Contractor's reasonable costs of shutdown, delay and start-up, plus interest as provided in the Contract Documents.

§ 2.2.3 After the Owner furnishes evidence of financial arrangements under this Section 2.2, the Owner shall not materially vary such financial arrangements without prior notice to the Contractor.

§ 2.2.4 Where the Owner has designated information furnished under this Section 2.2 as "confidential," the Contractor shall keep the information confidential and shall not disclose it to any other person. However, the Contractor may disclose "confidential" information, after seven (7) days' notice to the Owner, where disclosure is required by law, including a subpoena or other form of compulsory legal process issued by a court or governmental entity, or by court or arbitrator(s) order. The Contractor may also disclose "confidential" information to its employees, consultants, sureties, Subcontractors and their employees, Sub-subcontractors, and others who need to know the content of such information solely and exclusively for the Project and who agree to maintain the confidentiality of such information.

§ 2.3 Information and Services Required of the Owner

§ 2.3.1 Except for permits and fees that are the responsibility of the Contractor under the Contract Documents, including those required under Section 3.7.1, the Owner shall secure and pay for necessary approvals, easements, assessments and charges required for construction, use or occupancy of permanent structures or for permanent changes in existing facilities.

§ 2.3.2 The Owner shall retain an architect lawfully licensed to practice architecture, or an entity lawfully practicing architecture, in the jurisdiction where the Project is located. That person or entity is identified as the Architect in the Agreement and is referred to throughout the Contract Documents as if singular in number.

§ 2.3.3 If the employment of the Architect terminates, the Owner shall employ a successor to whom the Contractor has no reasonable objection and whose status under the Contract Documents shall be that of the Architect.

§ 2.3.4 The Owner shall furnish surveys describing physical characteristics, legal limitations and utility locations for the site of the Project, and a legal description of the site. The Contractor shall be entitled to rely on the accuracy of information furnished by the Owner but shall exercise proper precautions relating to the safe performance of the Work.

§ 2.3.5 The Owner shall furnish information or services required of the Owner by the Contract Documents with reasonable promptness. The Owner shall also furnish any other information or services under the Owner's control and relevant to the Contractor's performance of the Work with reasonable promptness after receiving the Contractor's written request for such information or services.

§ 2.3.6 Unless otherwise provided in the Contract Documents, the Owner shall furnish to the Contractor one copy of the Contract Documents for purposes of making reproductions pursuant to Section 1.5.2.

§ 2.4 Owner's Right to Stop the Work

If the Contractor fails to correct Work that is not in accordance with the requirements of the Contract Documents as required by Section 12.2 or repeatedly fails to carry out Work in accordance with the Contract Documents, the Owner may issue a written order to the Contractor to stop the Work, or any portion thereof, until the cause for such order has been eliminated; however, the right of the Owner to stop the Work shall not give rise to a duty on the part of the Owner

to exercise this right for the benefit of the Contractor or any other person or entity, except to the extent required by Section 6.1.3.

§ 2.5 Owner's Right to Carry Out the Work
If the Contractor defaults or neglects to carry out the Work in accordance with the Contract Documents and fails within a ten-day period after receipt of notice from the Owner to commence and continue correction of such default or neglect with diligence and promptness, the Owner may, without prejudice to other remedies the Owner may have, correct such default or neglect. Such action by the Owner and amounts charged to the Contractor are both subject to prior approval of the Architect and the Architect may, pursuant to Section 9.5.1, withhold or nullify a Certificate for Payment in whole or in part, to the extent reasonably necessary to reimburse the Owner for the reasonable cost of correcting such deficiencies, including Owner's expenses and compensation for the Architect's additional services made necessary by such default, neglect, or failure. If current and future payments are not sufficient to cover such amounts, the Contractor shall pay the difference to the Owner. If the Contractor disagrees with the actions of the Owner or the Architect, or the amounts claimed as costs to the Owner, the Contractor may file a Claim pursuant to Article 15.

ARTICLE 3 CONTRACTOR

§ 3.1 General
§ 3.1.1 The Contractor is the person or entity identified as such in the Agreement and is referred to throughout the Contract Documents as if singular in number. The Contractor shall be lawfully licensed, if required in the jurisdiction where the Project is located. The Contractor shall designate in writing a representative who shall have express authority to bind the Contractor with respect to all matters under this Contract. The term "Contractor" means the Contractor or the Contractor's authorized representative.

§ 3.1.2 The Contractor shall perform the Work in accordance with the Contract Documents.

§ 3.1.3 The Contractor shall not be relieved of its obligations to perform the Work in accordance with the Contract Documents either by activities or duties of the Architect in the Architect's administration of the Contract, or by tests, inspections or approvals required or performed by persons or entities other than the Contractor.

§ 3.2 Review of Contract Documents and Field Conditions by Contractor
§ 3.2.1 Execution of the Contract by the Contractor is a representation that the Contractor has visited the site, become generally familiar with local conditions under which the Work is to be performed, and correlated personal observations with requirements of the Contract Documents.

§ 3.2.2 Because the Contract Documents are complementary, the Contractor shall, before starting each portion of the Work, carefully study and compare the various Contract Documents relative to that portion of the Work, as well as the information furnished by the Owner pursuant to Section 2.3.4, shall take field measurements of any existing conditions related to that portion of the Work, and shall observe any conditions at the site affecting it. These obligations are for the purpose of facilitating coordination and construction by the Contractor and are not for the purpose of discovering errors, omissions, or inconsistencies in the Contract Documents; however, the Contractor shall promptly report to the Architect any errors, inconsistencies or omissions discovered by or made known to the Contractor as a request for information in such form as the Architect may require. It is recognized that the Contractor's review is made in the Contractor's capacity as a contractor and not as a licensed design professional, unless otherwise specifically provided in the Contract Documents.

§ 3.2.3 The Contractor is not required to ascertain that the Contract Documents are in accordance with applicable laws, statutes, ordinances, codes, rules and regulations, or lawful orders of public authorities, but the Contractor shall promptly report to the Architect any nonconformity discovered by or made known to the Contractor as a request for information in such form as the Architect may require.

§ 3.2.4 If the Contractor believes that additional cost or time is involved because of clarifications or instructions the Architect issues in response to the Contractor's notices or requests for information pursuant to Sections 3.2.2 or 3.2.3,

the Contractor shall submit Claims as provided in Article 15. If the Contractor fails to perform the obligations of Sections 3.2.2 or 3.2.3, the Contractor shall pay such costs and damages to the Owner, subject to Section 15.1.7, as would have been avoided if the Contractor had performed such obligations. If the Contractor performs those obligations, the Contractor shall not be liable to the Owner or Architect for damages resulting from errors, inconsistencies or omissions in the Contract Documents, for differences between field measurements or conditions and the Contract Documents, or for nonconformities of the Contract Documents to applicable laws, statutes, ordinances, codes, rules and regulations, and lawful orders of public authorities.

§ 3.2.5 The Owner shall be entitled to reimbursement from the Contractor for amounts paid to the Architect for evaluating and responding to the Contractor's requests for information where the requested information is available to the Contractor from a careful study and comparison of the Contract Documents, field conditions, other Owner-provided information, Contractor-prepared coordination drawings, or prior Project correspondence or documentation.

§ 3.3 Supervision and Construction Procedures

§ 3.3.1 The Contractor shall supervise and direct the Work, using the Contractor's best skill and attention. The Contractor shall be solely responsible for, and have control over, construction means, methods, techniques, sequences, and procedures, and for coordinating all portions of the Work under the Contract. If the Contract Documents give specific instructions concerning construction means, methods, techniques, sequences, or procedures, the Contractor shall evaluate the jobsite safety thereof and shall be solely responsible for the jobsite safety of such means, methods, techniques, sequences, or procedures. If the Contractor determines that such means, methods, techniques, sequences or procedures may not be safe, the Contractor shall give timely notice to the Owner and Architect, and shall propose alternative means, methods, techniques, sequences, or procedures. The Architect shall evaluate the proposed alternative solely for conformance with the design intent for the completed construction. Unless the Architect objects to the Contractor's proposed alternative, the Contractor shall perform the Work using its alternative means, methods, techniques, sequences, or procedures.

§ 3.3.2 The Contractor shall be responsible to the Owner for acts and omissions of the Contractor's employees, Subcontractors and their agents and employees, and other persons or entities performing portions of the Work for, or on behalf of, the Contractor or any of its Subcontractors.

§ 3.3.3 The Contractor shall be responsible for inspection of portions of Work already performed to determine that such portions are in proper condition to receive subsequent Work.

§ 3.4 Labor and Materials

§ 3.4.1 Unless otherwise provided in the Contract Documents, the Contractor shall provide and pay for labor, materials, equipment, tools, construction equipment and machinery, water, heat, utilities, transportation, and other facilities and services necessary for proper execution and completion of the Work, whether temporary or permanent and whether or not incorporated or to be incorporated in the Work. Work required by the Contract Documents to be performed after working hours or work the Contractor elects to perform after hours shall be completed at no additional cost to the Owner.

§ 3.4.2 Except in the case of minor changes in the Work approved by the Architect in accordance with Section 3.12.8 or ordered by the Architect in accordance with Section 7.4, the Contractor may make substitutions only with the consent of the Owner, after evaluation by the Architect and in accordance with a Change Order or Construction Change Directive.

§ 3.4.2.1 After the Contract has been executed, the Owner and Architect will consider requests for the substitution of products in place of those specified only under the conditions set forth in the General Requirements (Division 01 of the Specifications). By making requests for substitutions, the Contractor:

- **.1** represents that the Contractor has personally investigated the proposed substitute product and determined that it is equal or superior in all respects to that specified;
- **.2** represents that the Contractor will provide the same warranty for the substitution as it would have provided for the product specified;

.3 certifies that the cost data presented is complete and includes all related costs for the substituted product and for Work that must be changed as a result of the substitution, except for the Architect's redesign costs, and waives all claims for additional costs related to the substitution that subsequently become apparent; and

.4 shall coordinate the installation of the accepted substitute, making such changes as may be required for the Work to be complete in all respects.

§ 3.4.2.2 The Owner shall be entitled to reimbursement from the Contractor for amounts paid to the Architect for reviewing the Contractor's proposed substitutions and making agreed-upon changes in the Drawings and Specifications resulting from such substitutions.

§ 3.4.3 The Contractor shall enforce strict discipline and good order among the Contractor's employees and other persons carrying out the Work. The Contractor shall not permit employment of unfit persons or persons not properly skilled in tasks assigned to them.

§ 3.5 Warranty

§ 3.5.1 The Contractor warrants to the Owner and Architect that materials and equipment furnished under the Contract will be of good quality and new unless the Contract Documents require or permit otherwise. The Contractor further warrants that the Work will conform to the requirements of the Contract Documents and will be free from defects, except for those inherent in the quality of the Work the Contract Documents require or permit. Work, materials, or equipment not conforming to these requirements may be considered defective. The Contractor's warranty excludes remedy for damage or defect caused by abuse, alterations to the Work not executed by the Contractor, improper or insufficient maintenance, improper operation, or normal wear and tear and normal usage. If required by the Architect, the Contractor shall furnish satisfactory evidence as to the kind and quality of materials and equipment.

§ 3.5.2 All material, equipment, or other special warranties required by the Contract Documents shall be issued in the name of the Owner, or shall be transferable to the Owner, and shall commence in accordance with Section 9.8.4.

§ 3.6 Taxes

The Contractor shall pay sales, consumer, use and similar taxes for the Work provided by the Contractor that are legally enacted when bids are received or negotiations concluded, whether or not yet effective or merely scheduled to go into effect.

§ 3.6.1 Bidders shall be responsible for informing themselves of tax laws, requirements, regulations, and interpretations as they apply to this project.

§ 3.6.2 This Project is Iowa sales tax exempt. Persons shall purchase such items of tangible personal property without liability for the tax if such property will be used in the performance of the construction contract and a purchasing agent authorization letter and an exemption certificate, issued by the designated exempt entity, are presented to the retailer. Said taxes shall not be included in the bid value for this Project.

§ 3.6.3 The Owner shall issue an authorization letter and an exemption certificate to the Contractor, subcontractor, builder, or manufacturer to be used as provided in Iowa Code. The authorization letter and the exemption certificate shall specify the construction project to which they apply and shall be valid only for that project. The Owner shall notify the Iowa Department of Revenue that such authorization letter and exemption certificate have been issued. The notification shall, to the extent practicable, describe the project and identify the Contractors, subcontractors, builders, and manufacturers which will be using the letter and certificate.

§ 3.6.4 The Contractor shall provide to the Owner a listing of Contractors, subcontractors, builders, and manufacturers which will be purchasing tangible personable property for this Project and request the owner provide an authorization letter and an exemption certificate relative to Article 3.6.2 above.

§ 3.7 Permits, Fees, Notices and Compliance with Laws

§ 3.7.1 Unless otherwise provided in the Contract Documents, the Contractor shall secure and pay for the building permit as well as for other permits, fees, licenses, and inspections by government agencies necessary for proper execution and completion of the Work that are customarily secured after execution of the Contract and legally required at the time bids are received or negotiations concluded.

.1 City has calculated the required building permit fee of $250 per building. Each building will require a separate permit and fee. As stated above, the Contractor shall pay for these building permit fees.

§ 3.7.2 The Contractor shall comply with and give notices required by applicable laws, statutes, ordinances, codes, rules and regulations, and lawful orders of public authorities applicable to performance of the Work.

§ 3.7.3 If the Contractor performs Work knowing it to be contrary to applicable laws, statutes, ordinances, codes, rules and regulations, or lawful orders of public authorities, the Contractor shall assume appropriate responsibility for such Work and shall bear the costs attributable to correction.

§ 3.7.4 Concealed or Unknown Conditions

If the Contractor encounters conditions at the site that are (1) subsurface or otherwise concealed physical conditions that differ materially from those indicated in the Contract Documents or (2) unknown physical conditions of an unusual nature that differ materially from those ordinarily found to exist and generally recognized as inherent in construction activities of the character provided for in the Contract Documents, the Contractor shall promptly provide notice to the Owner and the Architect before conditions are disturbed and in no event later than 14 days after first observance of the conditions. The Architect will promptly investigate such conditions and, if the Architect determines that they differ materially and cause an increase or decrease in the Contractor's cost of, or time required for, performance of any part of the Work, will recommend that an equitable adjustment be made in the Contract Sum or Contract Time, or both. If the Architect determines that the conditions at the site are not materially different from those indicated in the Contract Documents and that no change in the terms of the Contract is justified, the Architect shall promptly notify the Owner and Contractor, stating the reasons. If either party disputes the Architect's determination or recommendation, that party may submit a Claim as provided in Article 15.

§ 3.7.5 If, in the course of the Work, the Contractor encounters human remains ~~or recognizes the existence of~~ burial markers, archaeological sites or wetlands not indicated in the Contract Documents, the Contractor shall immediately suspend any operations that would affect them and shall notify the Owner and Architect. Upon receipt of such notice, the Owner shall promptly take any action necessary to obtain governmental authorization required to resume the operations. The Contractor shall continue to suspend such operations until otherwise instructed by the Owner but shall continue with all other operations that do not affect those remains or features. Requests for adjustments in the Contract Sum and Contract Time arising from the existence or good faith belief of such existence of such remains or features may be made as provided in Article 15.

§ 3.7.6 Plan reviews which may be required by the State of Iowa Building Code Commissioner for 661 Iowa Administrative Code Chapter 200 Fire Marshal Administration or 661 Iowa Administrative Code Chapter 300 State Building Code - Administration shall be secured by the Architect and paid for by the Owner. Exception: Fire Alarm and Automatic Sprinkler System plan reviews and fees shall be paid by the Contractor.

§ 3.8 Allowances

§ 3.8.1 The Contractor shall include in the Contract Sum all allowances stated in the Contract Documents. Items covered by allowances shall be supplied for such amounts and by such persons or entities as the Owner may direct, but the Contractor shall not be required to employ persons or entities to whom the Contractor has reasonable objection.

§ 3.8.2 Unless otherwise provided in the Contract Documents,

.1 allowances shall cover the cost to the Contractor of materials and equipment delivered at the site and all required taxes, less applicable trade discounts;

.2 Contractor's costs for unloading and handling at the site, labor, installation costs, overhead, profit, and other expenses contemplated for stated allowance amounts shall be included in the Contract Sum but not in the allowances; and

.3 whenever costs are more than or less than allowances, the Contract Sum shall be adjusted accordingly

by Change Order. The amount of the Change Order shall reflect (1) the difference between actual costs and the allowances under Section 3.8.2.1 and (2) changes in Contractor's costs under Section 3.8.2.2.

§ 3.8.3 Materials and equipment under an allowance shall be selected by the Owner with reasonable promptness.

§ 3.9 Superintendent

§ 3.9.1 The Contractor shall employ a competent superintendent and necessary assistants who shall be in attendance at the Project site during performance of the Work. The superintendent shall represent the Contractor, and communications given to the superintendent shall be as binding as if given to the Contractor.

§ 3.9.2 The Contractor, as soon as practicable after award of the Contract, shall notify the Owner and Architect of the name and qualifications of a proposed superintendent. Within 14 days of receipt of the information, the Architect may notify the Contractor, stating whether the Owner or the Architect (1) has reasonable objection to the proposed superintendent or (2) requires additional time for review. Failure of the Architect to provide notice within the 14-day period shall constitute notice of no reasonable objection.

§ 3.9.3 The Contractor shall not employ a proposed superintendent to whom the Owner or Architect has made reasonable and timely objection. The Contractor shall not change the superintendent without the Owner's consent, which shall not unreasonably be withheld or delayed.

§ 3.9.4 The Contractor shall employ a superintendent or an assistant to the superintendent who will perform as a coordinator for structural, mechanical, and electrical Work. The coordinator shall be knowledgeable in structural, mechanical, and electrical systems and capable of reading, interpreting and coordinating Drawings, Specifications, and shop drawings pertaining to such systems. The coordinator shall assist the Subcontractors in arranging space conditions to eliminate interference between the structural, mechanical, and electrical systems and other Work and shall supervise the preparation of coordination drawings documenting the spatial arrangements for such systems within restricted spaces. The coordinator shall assist in planning and expediting the proper sequence of delivery of structural, mechanical, and electrical equipment to the site.

§ 3.10 Contractor's Construction and Submittal Schedules

§ 3.10.1 The Contractor, promptly after being awarded the Contract, shall submit for the Owner's and Architect's information a Contractor's construction schedule for the Work. The schedule shall contain detail appropriate for the Project, including (1) the date of commencement of the Work, interim schedule milestone dates, and the date of Substantial Completion; (2) an apportionment of the Work by construction activity; and (3) the time required for completion of each portion of the Work. The schedule shall provide for the orderly progression of the Work to completion and shall not exceed time limits current under the Contract Documents. The schedule shall be revised at appropriate intervals as required by the conditions of the Work and Project.

§ 3.10.2 The Contractor, promptly after being awarded the Contract and thereafter as necessary to maintain a current submittal schedule, shall submit a submittal schedule for the Architect's approval. The Architect's approval shall not be unreasonably delayed or withheld. The submittal schedule shall (1) be coordinated with the Contractor's construction schedule, and (2) allow the Architect reasonable time to review submittals. ~~If the Contractor fails to submit a submittal schedule, or fails to provide submittals in accordance with the approved submittal schedule, the Contractor shall not be entitled to any increase in Contract Sum or extension of Contract Time based on the time required for review of submittals.~~

§ 3.10.3 The Contractor shall perform the Work in general accordance with the most recent schedules submitted to the Owner and Architect.

§ 3.11 Documents and Samples at the Site

The Contractor shall make available, at the Project site, the Contract Documents, including Change Orders, Construction Change Directives, and other Modifications, in good order and marked currently to indicate field changes and selections made during construction, and the approved Shop Drawings, Product Data, Samples, and similar required submittals. These shall be in electronic form or paper copy, available to the Architect and Owner, and

delivered to the Architect for submittal to the Owner upon completion of the Work as a record of the Work as constructed.

§ 3.12 Shop Drawings, Product Data and Samples

§ 3.12.1 Shop Drawings are drawings, diagrams, schedules, and other data specially prepared for the Work by the Contractor or a Subcontractor, Sub-subcontractor, manufacturer, supplier, or distributor to illustrate some portion of the Work.

§ 3.12.2 Product Data are illustrations, standard schedules, performance charts, instructions, brochures, diagrams, and other information furnished by the Contractor to illustrate materials or equipment for some portion of the Work.

§ 3.12.3 Samples are physical examples that illustrate materials, equipment, or workmanship, and establish standards by which the Work will be judged.

§ 3.12.4 Shop Drawings, Product Data, Samples, and similar submittals are not Contract Documents. Their purpose is to demonstrate how the Contractor proposes to conform to the information given and the design concept expressed in the Contract Documents for those portions of the Work for which the Contract Documents require submittals. Review by the Architect is subject to the limitations of Section 4.2.7. Informational submittals upon which the Architect is not expected to take responsive action may be so identified in the Contract Documents. Submittals that are not required by the Contract Documents may be returned by the Architect without action.

§ 3.12.5 The Contractor shall review for compliance with the Contract Documents, approve, and submit to the Architect, Shop Drawings, Product Data, Samples, and similar submittals required by the Contract Documents, in accordance with the submittal schedule approved by the Architect or, in the absence of an approved submittal schedule, with reasonable promptness and in such sequence as to cause no delay in the Work or in the activities of the Owner or of Separate Contractors.

§ 3.12.6 By submitting Shop Drawings, Product Data, Samples, and similar submittals, the Contractor represents to the Owner and Architect that the Contractor has (1) reviewed and approved them, (2) determined and verified materials, field measurements and field construction criteria related thereto, or will do so, and (3) checked and coordinated the information contained within such submittals with the requirements of the Work and of the Contract Documents.

§ 3.12.7 The Contractor shall perform no portion of the Work for which the Contract Documents require submittal and review of Shop Drawings, Product Data, Samples, or similar submittals, until the respective submittal has been approved by the Architect.

§ 3.12.8 The Work shall be in accordance with approved submittals except that the Contractor shall not be relieved of responsibility for deviations from the requirements of the Contract Documents by the Architect's approval of Shop Drawings, Product Data, Samples, or similar submittals, unless the Contractor has specifically notified the Architect of such deviation at the time of submittal and (1) the Architect has given written approval to the specific deviation as a minor change in the Work, or (2) a Change Order or Construction Change Directive has been issued authorizing the deviation. The Contractor shall not be relieved of responsibility for errors or omissions in Shop Drawings, Product Data, Samples, or similar submittals, by the Architect's approval thereof.

§ 3.12.9 The Contractor shall direct specific attention, in writing or on resubmitted Shop Drawings, Product Data, Samples, or similar submittals, to revisions other than those requested by the Architect on previous submittals. In the absence of such notice, the Architect's approval of a resubmission shall not apply to such revisions.

§ 3.12.10 The Contractor shall not be required to provide professional services that constitute the practice of architecture or engineering unless such services are specifically required by the Contract Documents for a portion of the Work or unless the Contractor needs to provide such services in order to carry out the Contractor's responsibilities for construction means, methods, techniques, sequences, and procedures. The Contractor shall not be required to provide professional services in violation of applicable law.

§ 3.12.10.1 If professional design services or certifications by a design professional related to systems, materials, or equipment are specifically required of the Contractor by the Contract Documents, the Owner and the Architect will specify all performance and design criteria that such services must satisfy. The Contractor shall be entitled to rely upon the adequacy and accuracy of the performance and design criteria provided in the Contract Documents. The Contractor shall cause such services or certifications to be provided by an appropriately licensed design professional, whose signature and seal shall appear on all drawings, calculations, specifications, certifications, Shop Drawings, and other submittals prepared by such professional. Shop Drawings, and other submittals related to the Work, designed or certified by such professional, if prepared by others, shall bear such professional's written approval when submitted to the Architect. The Owner and the Architect shall be entitled to rely upon the adequacy and accuracy of the services, certifications, and approvals performed or provided by such design professionals, provided the Owner and Architect have specified to the Contractor the performance and design criteria that such services must satisfy. Pursuant to this Section 3.12.10, the Architect will review and approve or take other appropriate action on submittals only for the limited purpose of checking for conformance with information given and the design concept expressed in the Contract Documents.

§ 3.12.10.2 If the Contract Documents require the Contractor's design professional to certify that the Work has been performed in accordance with the design criteria, the Contractor shall furnish such certifications to the Architect at the time and in the form specified by the Architect.

§ 3.12.11 The Architect's and its consultant's review of Contractor's submittals will be limited to examination of an initial submittal and one (1) re-submittal. The Architect's review of additional submittals will be made only with the consent of the Owner after notification by the Architect. The Owner shall be entitled to deduct from the Contract Sum amounts paid to the Architect for evaluation of such additional re-submittals.

§ 3.12.12 The Architect's and its consultant's review of Contractor's submittal out of sequence from the submittal schedule agreed to by the Architect shall entitle the Owner to deduct from the Contract Sum amounts paid to the Architect for review of such out of sequence submittals.

§ 3.13 Use of Site

The Contractor shall confine operations at the site to areas permitted by applicable laws, statutes, ordinances, codes, rules and regulations, lawful orders of public authorities, and the Contract Documents and shall not unreasonably encumber the site with materials or equipment.

§ 3.14 Cutting and Patching

§ 3.14.1 The Contractor shall be responsible for cutting, fitting, or patching required to complete the Work or to make its parts fit together properly. All areas requiring cutting, fitting, or patching shall be restored to the condition existing prior to the cutting, fitting, or patching, unless otherwise required by the Contract Documents.

§ 3.14.2 The Contractor shall not damage or endanger a portion of the Work or fully or partially completed construction of the Owner or Separate Contractors by cutting, patching, or otherwise altering such construction, or by excavation. The Contractor shall not cut or otherwise alter construction by the Owner or a Separate Contractor except with written consent of the Owner and of the Separate Contractor. Consent shall not be unreasonably withheld. The Contractor shall not unreasonably withhold, from the Owner or a Separate Contractor, its consent to cutting or otherwise altering the Work.

§ 3.15 Cleaning Up

§ 3.15.1 The Contractor shall keep the premises and surrounding area free from accumulation of waste materials and rubbish caused by operations under the Contract. At completion of the Work, the Contractor shall remove waste materials, rubbish, the Contractor's tools, construction equipment, machinery, and surplus materials from and about the Project.

§ 3.15.2 If the Contractor fails to clean up as provided in the Contract Documents, the Owner may do so and the Owner shall be entitled to reimbursement from the Contractor.

§ 3.16 Access to Work
The Contractor shall provide the Owner and Architect with access to the Work in preparation and progress wherever located.

§ 3.17 Royalties, Patents and Copyrights
The Contractor shall pay all royalties and license fees. The Contractor shall defend suits or claims for infringement of copyrights and patent rights and shall hold the Owner and Architect harmless from loss on account thereof, but shall not be responsible for defense or loss when a particular design, process, or product of a particular manufacturer or manufacturers is required by the Contract Documents, or where the copyright violations are contained in Drawings, Specifications, or other documents prepared by the Owner or Architect. However, if an infringement of a copyright or patent is discovered by, or made known to, the Contractor, the Contractor shall be responsible for the loss unless the information is promptly furnished to the Architect.

§ 3.18 Indemnification
~~**§ 3.18.1** To the fullest extent permitted by law, the Contractor shall indemnify and hold harmless the Owner, Architect, Architect's consultants, and agents and employees of any of them from and against claims, damages, losses, and expenses, including but not limited to attorneys' fees, arising out of or resulting from performance of the Work, provided that such claim, damage, loss, or expense is attributable to bodily injury, sickness, disease or death, or to injury to or destruction of tangible property (other than the Work itself), but only to the extent caused by the negligent acts or omissions of the Contractor, a Subcontractor, anyone directly or indirectly employed by them, or anyone for whose acts they may be liable, regardless of whether or not such claim, damage, loss, or expense is caused in part by a party indemnified hereunder. Such obligation shall not be construed to negate, abridge, or reduce other rights or obligations of indemnity that would otherwise exist as to a party or person described in this Section 3.18.~~

§ 3.18.1 To the fullest extent permitted by law, the Contractor shall defend, indemnify and hold harmless the Owner, Architect, Architect's Consultants, and their agents and employees from and against any and all claims, causes of actions, damages, losses and expenses, including but not limited to attorney's' fees, arising out of or resulting from the performance or prosecution of the Work by the Contractor, it's subcontractors, agents, or employees; or arising from any neglect, default, or mismanagement or omissions by the Contractor, it's subcontractors, agents, or employees in the performance of any duties imposed by the contract or by law; provided that any such claim, damage, loss, or expense:

.1 is attributable to bodily injury, sickness, disease or death, or to injury to or destruction of tangible property (other than the work itself) including the loss of use resulting there from, and

.2 is caused in whole or in part by any fault, negligence, act, or omission of the Contractor, any subcontractor, anyone directly or indirectly employed by them and/or anyone for whose acts any of them may be liable, and including any of their employee's injury or damages caused in whole or in part by the negligence of the same employee.

Such obligation shall not be construed to negate, abridge, or otherwise reduce any other right or obligation of indemnity which would otherwise exist as to any party or person described in Section 3.18.1.

§ 3.18.2 In claims against any person or entity indemnified under this Section 3.18 by an employee of the Contractor, a Subcontractor, anyone directly or indirectly employed by them, or anyone for whose acts they may be liable, the indemnification obligation under Section 3.18.1 shall not be limited by a limitation on amount or type of damages, compensation, or benefits payable by or for the Contractor or a Subcontractor under workers' compensation acts, disability benefit acts, or other employee benefit acts.

§3.19 Iowa Code Chapter 573 Claims

§ 3.19.1 Contractor shall secure discharge by separate surety bond or otherwise of any 573 Claim that arises from Contractor's dealings with subcontractors or suppliers, or from any subcontractor's dealings with sub-subcontractors or suppliers. Contractor shall indemnify the Owner for any costs the Owner may sustain due to the filing of any Iowa Code Chapter 573 Claims arising from Contractor's dealings with subcontractors or suppliers, including the price of any bond to discharge said claims and reasonable attorney's fees incurred in defending said claims. The Owner shall retain all rights to make any claims or pursue any remedies it might have in contract or common law against the Contractor or surety. After Contractor's discharge by separate surety bond or otherwise of any 573 claim, Owner shall waive all rights to withhold double (or any part of) said 573 claim.

ARTICLE 4 ARCHITECT

§ 4.1 General

§ 4.1.1 The Architect is the person or entity retained by the Owner pursuant to Section 2.3.2 and identified as such in the Agreement.

§ 4.1.2 Duties, responsibilities, and limitations of authority of the Architect as set forth in the Contract Documents shall not be restricted, modified, or extended without written consent of the Owner, Contractor, and Architect. Consent shall not be unreasonably withheld.

§ 4.2 Administration of the Contract

§ 4.2.1 The Architect will provide administration of the Contract as described in the Contract Documents and will be an Owner's representative during construction until the date the Architect issues the final Certificate for Payment. The Architect will have authority to act on behalf of the Owner only to the extent provided in the Contract Documents.

§ 4.2.2 The Architect will visit the site at intervals appropriate to the stage of construction, or as otherwise agreed with the Owner, to become generally familiar with the progress and quality of the portion of the Work completed, and to determine in general if the Work observed is being performed in a manner indicating that the Work, when fully completed, will be in accordance with the Contract Documents. However, the Architect will not be required to make exhaustive or continuous on-site inspections to check the quality or quantity of the Work. The Architect will not have control over, charge of, or responsibility for the construction means, methods, techniques, sequences or procedures, or for the safety precautions and programs in connection with the Work, since these are solely the Contractor's rights and responsibilities under the Contract Documents.

§ 4.2.3 On the basis of the site visits, the Architect will keep the Owner reasonably informed about the progress and quality of the portion of the Work completed, and promptly report to the Owner (1) known deviations from the Contract Documents, (2) known deviations from the most recent construction schedule submitted by the Contractor, and (3) defects and deficiencies observed in the Work. The Architect will not be responsible for the Contractor's failure to perform the Work in accordance with the requirements of the Contract Documents. The Architect will not have control over or charge of, and will not be responsible for acts or omissions of, the Contractor, Subcontractors, or their agents or employees, or any other persons or entities performing portions of the Work.

§ 4.2.4 Communications

The Owner and Contractor shall include the Architect in all communications that relate to or affect the Architect's services or professional responsibilities. The Owner shall promptly notify the Architect of the substance of any direct communications between the Owner and the Contractor otherwise relating to the Project. Communications by and with the Architect's consultants shall be through the Architect. Communications by and with Subcontractors and suppliers shall be through the Contractor. Communications by and with Separate Contractors shall be through the Owner. The Contract Documents may specify other communication protocols. Communications by and with individual building owners, tenants, and occupants shall be through the Owner.

§ 4.2.5 Based on the Architect's evaluations of the Contractor's Applications for Payment, the Architect will review and certify the amounts due the Contractor and will issue Certificates for Payment in such amounts.

§ 4.2.6 The Architect has authority to reject Work that does not conform to the Contract Documents. Whenever the Architect considers it necessary or advisable, the Architect will have authority to require inspection or testing of the Work in accordance with Sections 13.4.2 and 13.4.3, whether or not the Work is fabricated, installed or completed. However, neither this authority of the Architect nor a decision made in good faith either to exercise or not to exercise such authority shall give rise to a duty or responsibility of the Architect to the Contractor, Subcontractors, suppliers, their agents or employees, or other persons or entities performing portions of the Work.

§ 4.2.7 The Architect will review and approve, or take other appropriate action upon, the Contractor's submittals such as Shop Drawings, Product Data, and Samples, but only for the limited purpose of checking for conformance with information given and the design concept expressed in the Contract Documents. The Architect's action will be taken in accordance with the submittal schedule approved by the Architect or, in the absence of an approved submittal schedule, with reasonable promptness while allowing sufficient time in the Architect's professional judgment to permit adequate review. Review of such submittals is not conducted for the purpose of determining the accuracy and completeness of other details such as dimensions and quantities, or for substantiating instructions for installation or performance of equipment or systems, all of which remain the responsibility of the Contractor as required by the Contract Documents. The Architect's review of the Contractor's submittals shall not relieve the Contractor of the obligations under Sections 3.3, 3.5, and 3.12. The Architect's review shall not constitute approval of safety precautions or of any construction means, methods, techniques, sequences, or procedures. The Architect's approval of a specific item shall not indicate approval of an assembly of which the item is a component.

§ 4.2.8 The Architect will prepare Change Orders and Construction Change Directives, and may order minor changes in the Work as provided in Section 7.4. The Architect will investigate and make determinations and recommendations regarding concealed and unknown conditions as provided in Section 3.7.4.

§ 4.2.9 The Architect will conduct inspections to determine the date or dates of Substantial Completion and the date of final completion; issue Certificates of Substantial Completion pursuant to Section 9.8; receive and forward to the Owner, for the Owner's review and records, written warranties and related documents required by the Contract and assembled by the Contractor pursuant to Section 9.10; and issue a final Certificate for Payment pursuant to Section 9.10.

§ 4.2.10 If the Owner and Architect agree, the Architect will provide one or more Project representatives to assist in carrying out the Architect's responsibilities at the site. ~~The Owner shall notify the Contractor of any change in the duties, responsibilities and limitations of authority of the Project representatives.~~

§ 4.2.11 The Architect will interpret and decide matters concerning performance under, and requirements of, the Contract Documents on written request of either the Owner or Contractor. The Architect's response to such requests will be made in writing within any time limits agreed upon <u>in writing</u> or otherwise with reasonable promptness.

§ 4.2.12 Interpretations and decisions of the Architect will be consistent with the intent of, and reasonably inferable from, the Contract Documents and will be in writing or in the form of drawings. When making such interpretations and decisions, the Architect will endeavor to secure faithful performance by both Owner and Contractor, will not show partiality to either, and will not be liable for results of interpretations or decisions rendered in good faith.

§ 4.2.13 The Architect's decisions on matters relating to aesthetic effect will be final if consistent with the intent expressed in the Contract Documents.

§ 4.2.14 The Architect will review and respond to requests for information about the Contract Documents. The Architect's response to such requests will be made in writing within any time limits agreed upon <u>in writing</u> or otherwise with reasonable promptness. If appropriate, the Architect will prepare and issue supplemental Drawings and Specifications in response to the requests for information.

ARTICLE 5 SUBCONTRACTORS

§ 5.1 Definitions

§ 5.1.1 A Subcontractor is a person or entity who has a direct contract with the Contractor to perform a portion of the Work at the site. The term "Subcontractor" is referred to throughout the Contract Documents as if singular in number and means a Subcontractor or an authorized representative of the Subcontractor. The term "Subcontractor" does not include a Separate Contractor or the subcontractors of a Separate Contractor.

§ 5.1.2 A Sub-subcontractor is a person or entity who has a direct or indirect contract with a Subcontractor to perform a portion of the Work at the site. The term "Sub-subcontractor" is referred to throughout the Contract Documents as if singular in number and means a Sub-subcontractor or an authorized representative of the Sub-subcontractor.

§ 5.2 Award of Subcontracts and Other Contracts for Portions of the Work

§ 5.2.1 Unless otherwise stated in the Contract Documents, the Contractor, as soon as practicable after award of the Contract, shall notify the Owner and Architect of the persons or entities proposed for each principal portion of the Work, including those who are to furnish materials or equipment fabricated to a special design. Within 14 days of receipt of the information, the Architect may notify the Contractor whether the Owner or the Architect (1) has reasonable objection to any such proposed person or entity or (2) requires additional time for review. Failure of the Architect to provide notice within the 14-day period shall constitute notice of no reasonable objection.

§ 5.2.2 The Contractor shall not contract with a proposed person or entity to whom the Owner or Architect has made reasonable and timely objection. The Contractor shall not be required to contract with anyone to whom the Contractor has made reasonable objection.

§ 5.2.3 If the Owner or Architect has reasonable objection to a person or entity proposed by the Contractor, the Contractor shall propose another to whom the Owner or Architect has no reasonable objection. If the proposed but rejected Subcontractor was reasonably capable of performing the Work, the Contract Sum and Contract Time shall be increased or decreased by the difference, if any, occasioned by such change, and an appropriate Change Order shall be issued before commencement of the substitute Subcontractor's Work. However, no increase in the Contract Sum or Contract Time shall be allowed for such change unless the Contractor has acted promptly and responsively in submitting names as required.

§ 5.2.4 The Contractor shall not substitute a Subcontractor, person, or entity for one previously selected if the Owner or Architect makes reasonable objection to such substitution.

§ 5.3 Subcontractual Relations

By appropriate written agreement, the Contractor shall require each Subcontractor, to the extent of the Work to be performed by the Subcontractor, to be bound to the Contractor by terms of the Contract Documents, and to assume toward the Contractor all the obligations and responsibilities, including the responsibility for safety of the Subcontractor's Work that the Contractor, by these Contract Documents, assumes toward the Owner and Architect. Each subcontract agreement shall preserve and protect the rights of the Owner and Architect under the Contract Documents with respect to the Work to be performed by the Subcontractor so that subcontracting thereof will not prejudice such rights, and shall allow to the Subcontractor, unless specifically provided otherwise in the subcontract agreement, the benefit of all rights, remedies, and redress against the Contractor that the Contractor, by the Contract Documents, has against the Owner. Where appropriate, the Contractor shall require each Subcontractor to enter into similar agreements with Sub-subcontractors. The Contractor shall make available to each proposed Subcontractor, prior to the execution of the subcontract agreement, copies of the Contract Documents to which the Subcontractor will be bound, and, upon written request of the Subcontractor, identify to the Subcontractor terms and conditions of the proposed subcontract agreement that may be at variance with the Contract Documents. Subcontractors will similarly make copies of applicable portions of such documents available to their respective proposed Sub-subcontractors.

§ 5.4 Contingent Assignment of Subcontracts

§ 5.4.1 Each subcontract agreement for a portion of the Work is assigned by the Contractor to the Owner, provided that

.1 assignment is effective only after termination of the Contract by the Owner for cause pursuant to Section 14.2 and only for those subcontract agreements that the Owner accepts by notifying the Subcontractor and Contractor; and

.2 assignment is subject to the prior rights of the surety, if any, obligated under bond relating to the Contract.

When the Owner accepts the assignment of a subcontract agreement, the Owner assumes the Contractor's rights and obligations under the subcontract.

§ 5.4.2 Upon such assignment, if the Work has been suspended for more than 30 days, the Subcontractor's compensation shall be equitably adjusted for increases in cost resulting from the suspension.

§ 5.4.3 Upon assignment to the Owner under this Section 5.4, the Owner may further assign the subcontract to a successor contractor or other entity. If the Owner assigns the subcontract to a successor contractor or other entity, the Owner shall nevertheless remain legally responsible for all of the successor contractor's obligations under the subcontract.

ARTICLE 6 CONSTRUCTION BY OWNER OR BY SEPARATE CONTRACTORS

§ 6.1 Owner's Right to Perform Construction and to Award Separate Contracts

§ 6.1.1 The term "Separate Contractor(s)" shall mean other contractors retained by the Owner under separate agreements. The Owner reserves the right to perform construction or operations related to the Project with the Owner's own forces, and with Separate Contractors retained under Conditions of the Contract substantially similar to those of this Contract, including those provisions of the Conditions of the Contract related to insurance and waiver of subrogation.

§ 6.1.2 When separate contracts are awarded for different portions of the Project or other construction or operations on the site, the term "Contractor" in the Contract Documents in each case shall mean the Contractor who executes each separate Owner-Contractor Agreement.

§ 6.1.3 The Owner shall provide for coordination of the activities of the Owner's own forces and of each Separate Contractor with the Work of the Contractor, who shall cooperate with them. The Contractor shall participate with any Separate Contractors and the Owner in reviewing their construction schedules. The Contractor shall make any revisions to its construction schedule deemed necessary after a joint review and mutual agreement. The construction schedules shall then constitute the schedules to be used by the Contractor, Separate Contractors, and the Owner until subsequently revised.

§ 6.1.4 Unless otherwise provided in the Contract Documents, when the Owner performs construction or operations related to the Project with the Owner's own forces or with Separate Contractors, the Owner or its Separate Contractors shall have the same obligations and rights that the Contractor has under the Conditions of the Contract, including, without excluding others, those stated in Article 3, this Article 6, and Articles 10, 11, and 12.

§ 6.2 Mutual Responsibility

§ 6.2.1 The Contractor shall afford the Owner and Separate Contractors reasonable opportunity for introduction and storage of their materials and equipment and performance of their activities, and shall connect and coordinate the Contractor's construction and operations with theirs as required by the Contract Documents.

§ 6.2.2 If part of the Contractor's Work depends for proper execution or results upon construction or operations by the Owner or a Separate Contractor, the Contractor shall, prior to proceeding with that portion of the Work, promptly notify the Architect of apparent discrepancies or defects in the construction or operations by the Owner or Separate Contractor that would render it unsuitable for proper execution and results of the Contractor's Work. Failure of the Contractor to notify the Architect of apparent discrepancies or defects prior to proceeding with the Work shall constitute an acknowledgment that the Owner's or Separate Contractor's completed or partially completed construction is fit and proper to receive the Contractor's Work. The Contractor shall not be responsible for discrepancies or defects in the construction or operations by the Owner or Separate Contractor that are not apparent.

§ 6.2.3 The Contractor shall reimburse the Owner for costs the Owner incurs that are payable to a Separate Contractor because of the Contractor's delays, improperly timed activities or defective construction. The Owner shall be

responsible to the Contractor for costs the Contractor incurs because of a Separate Contractor's delays, improperly timed activities, damage to the Work or defective construction.

§ 6.2.4 The Contractor shall promptly remedy damage that the Contractor wrongfully causes to completed or partially completed construction or to property of the Owner or Separate Contractor as provided in Section 10.2.5.

§ 6.2.5 The Owner and each Separate Contractor shall have the same responsibilities for cutting and patching as are described for the Contractor in Section 3.14.

§ 6.3 Owner's Right to Clean Up

If a dispute arises among the Contractor, Separate Contractors, and the Owner as to the responsibility under their respective contracts for maintaining the premises and surrounding area free from waste materials and rubbish, the Owner may clean up and the Architect will allocate the cost among those responsible.

ARTICLE 7 CHANGES IN THE WORK

§ 7.1 General

§ 7.1.1 Changes in the Work may be accomplished after execution of the Contract, and without invalidating the Contract, by Change Order, Construction Change Directive or order for a minor change in the Work, subject to the limitations stated in this Article 7 and elsewhere in the Contract Documents.

§ 7.1.2 A Change Order shall be based upon agreement among the Owner, Contractor, and Architect. A Construction Change Directive requires agreement by the Owner and Architect and may or may not be agreed to by the Contractor. An order for a minor change in the Work may be issued by the Architect alone.

§ 7.1.3 Changes in the Work shall be performed under applicable provisions of the Contract Documents. The Contractor shall proceed promptly with changes in the Work, unless otherwise provided in the Change Order, Construction Change Directive, or order for a minor change in the Work.

§ 7.2 Change Orders

§ 7.2.1 A Change Order is a written instrument prepared by the Architect and signed by the Owner, Contractor, and Architect stating their agreement upon all of the following:

- **.1** The change in the Work;
- **.2** The amount of the adjustment, if any, in the Contract Sum; and
- **.3** The extent of the adjustment, if any, in the Contract Time.

§ 7.2.2 Contractor shall comply with the following provisions in determining any change in contract cost.

- **.1** For the Prime Contractor, any changes or additions to the work which involve extra cost and for which the additional cost is determined by mutual agreement on a lump sum amount, shall be handled on the basis of net cost plus 10 percent; this percentage shall include overhead and profit. 'Cost' shall include all items of material and labor, including pro rata charge for foreman, use of power tools and equipment (for the time actually used), power, bond premium, liability, compensation, insurance, and automobile insurance. Social security insurance, old age, and unemployment insurance may be considered as cost, but these items will not carry the 10 percent for overhead and profit. When requested, the Contractor shall furnish evidence of net cost by means of invoices and certified time records.
- **.2** When the Prime Contractor seeks the work of a change order through the quotation of a subcontractor(s), the cost submitted to the Owner will list a total maximum of 15 percent overhead and profit for all Contractors. Ten percent (10%) overhead and profit will be allowed for the Contractor actually performing the work. The remaining 5 percent will be allowed for coordination of the work by the Prime Contractor.
- **.3** Changes in the work involving credits for work not performed shall be made on the basis of total cost. Contractor mark-up for profit and overhead shall be included in the construction cost change.

.4 The Contractor shall furnish to the Architect an itemized breakdown of quantities and prices on all changes. Degree and detail of breakdown shall be at the Architect's discretion, but, in general, shall be in such detail appropriate to the size and scope of the change so as to allow timely and meaningful evaluation.

§ 7.3 Construction Change Directives

§ 7.3.1 A Construction Change Directive is a written order prepared by the Architect and signed by the Owner and Architect, directing a change in the Work prior to agreement on adjustment, if any, in the Contract Sum or Contract Time, or both. The Owner may by Construction Change Directive, without invalidating the Contract, order changes in the Work within the general scope of the Contract consisting of additions, deletions, or other revisions, the Contract Sum and Contract Time being adjusted accordingly.

§ 7.3.2 A Construction Change Directive shall be used in the absence of total agreement on the terms of a Change Order.

§ 7.3.3 If the Construction Change Directive provides for an adjustment to the Contract Sum, the adjustment shall be based on one of the following methods:

.1 Mutual acceptance of a lump sum properly itemized and supported by sufficient substantiating data to permit evaluation;

.2 Unit prices stated in the Contract Documents or subsequently agreed upon;

.3 Cost to be determined in a manner agreed upon by the parties and a mutually acceptable fixed or percentage fee; or

.4 As provided in Section 7.3.4.

§ 7.3.4 If the Contractor does not respond promptly or disagrees with the method for adjustment in the Contract Sum, the Architect shall determine the adjustment on the basis of reasonable expenditures and savings of those performing the Work attributable to the change, including, in case of an increase in the Contract Sum, an amount for overhead and profit as set forth in the Agreement, or if no such amount is set forth in the Agreement, a reasonable amount. In such case, and also under Section 7.3.3.3, the Contractor shall keep and present, in such form as the Architect may prescribe, an itemized accounting together with appropriate supporting data. Unless otherwise provided in the Contract Documents, costs for the purposes of this Section 7.3.4 shall be limited to the following:

.1 Costs of labor, including applicable payroll taxes, fringe benefits required by agreement or custom, workers' compensation insurance, and other employee costs approved by the Architect;

.2 Costs of materials, supplies, and equipment, including cost of transportation, whether incorporated or consumed;

.3 Rental costs of machinery and equipment, exclusive of hand tools, whether rented from the Contractor or others;

.4 Costs of premiums for all bonds and insurance, permit fees, and sales, use, or similar taxes, directly related to the change; and

.5 Costs of supervision and field office personnel directly attributable to the change.

§ 7.3.5 If the Contractor disagrees with the adjustment in the Contract Time, the Contractor may make a Claim in accordance with applicable provisions of Article 15.

§ 7.3.6 Upon receipt of a Construction Change Directive, the Contractor shall promptly proceed with the change in the Work involved and advise the Architect of the Contractor's agreement or disagreement with the method, if any, provided in the Construction Change Directive for determining the proposed adjustment in the Contract Sum or Contract Time.

§ 7.3.7 A Construction Change Directive signed by the Contractor indicates the Contractor's agreement therewith, including adjustment in Contract Sum and Contract Time or the method for determining them. Such agreement shall be effective immediately and shall be recorded as a Change Order.

§ 7.3.8 The amount of credit to be allowed by the Contractor to the Owner for a deletion or change that results in a net decrease in the Contract Sum shall be actual net cost as confirmed by the Architect. When both additions and

credits covering related Work or substitutions are involved in a change, the allowance for overhead and profit shall be figured on the basis of net increase, if any, with respect to that change.

§ 7.3.9 Pending final determination of the total cost of a Construction Change Directive to the Owner, the Contractor may request payment for Work completed under the Construction Change Directive in Applications for Payment. The Architect will make an interim determination for purposes of monthly certification for payment for those costs and certify for payment the amount that the Architect determines, in the Architect's professional judgment, to be reasonably justified. The Architect's interim determination of cost shall adjust the Contract Sum on the same basis as a Change Order, subject to the right of either party to disagree and assert a Claim in accordance with Article 15.

§ 7.3.10 When the Owner and Contractor agree with a determination made by the Architect concerning the adjustments in the Contract Sum and Contract Time, or otherwise reach agreement upon the adjustments, such agreement shall be effective immediately and the Architect will prepare a Change Order. Change Orders may be issued for all or any part of a Construction Change Directive.

§ 7.4 Minor Changes in the Work
The Architect may order minor changes in the Work that are consistent with the intent of the Contract Documents and do not involve an adjustment in the Contract Sum or an extension of the Contract Time. The Architect's order for minor changes shall be in writing. If the Contractor believes that the proposed minor change in the Work will affect the Contract Sum or Contract Time, the Contractor shall notify the Architect and shall not proceed to implement the change in the Work. If the Contractor performs the Work set forth in the Architect's order for a minor change without prior notice to the Architect that such change will affect the Contract Sum or Contract Time, the Contractor waives any adjustment to the Contract Sum or extension of the Contract Time.

ARTICLE 8 TIME

§ 8.1 Definitions
§ 8.1.1 Unless otherwise provided, Contract Time is the period of time, including authorized adjustments, allotted in the Contract Documents for Substantial Completion of the Work.

§ 8.1.2 The date of commencement of the Work is the date established in the Agreement.

§ 8.1.3 The date of Substantial Completion is the date certified by the Architect in accordance with Section 9.8.

§ 8.1.4 The term "day" as used in the Contract Documents shall mean calendar day unless otherwise specifically defined.

§ 8.2 Progress and Completion
§ 8.2.1 Time limits stated in the Contract Documents are of the essence of the Contract. By executing the Agreement, the Contractor confirms that the Contract Time is a reasonable period for performing the Work.

§ 8.2.2 The Contractor shall not knowingly, except by agreement or instruction of the Owner in writing, commence the Work prior to the effective date of insurance required to be furnished by the Contractor and Owner.

§ 8.2.3 The Contractor shall proceed expeditiously with adequate forces and shall achieve Substantial Completion within the Contract Time.

§ 8.3 Delays and Extensions of Time
§ 8.3.1 If the Contractor is delayed at any time in the commencement or progress of the Work by (1) an act or neglect of the Owner or Architect, of an employee of either, or of a Separate Contractor; (2) by changes ordered in the Work; (3) by labor disputes, fire, unusual delay in deliveries, unavoidable casualties, adverse weather conditions documented in accordance with Section 15.1.6.2, or other causes beyond the Contractor's control; (4) by delay authorized by the Owner pending mediation and binding dispute resolution; or (5) by other causes that the Contractor asserts, and the

Architect determines, justify delay, then the Contract Time shall be extended for such reasonable time as the Architect may determine.

§ 8.3.2 Claims relating to time shall be made in accordance with applicable provisions of Article 15.

§ 8.3.3 This Section 8.3 does not preclude recovery of damages for delay by either party under other provisions of the Contract Documents.

§ 8.3.4 The Owner shall be entitled to reimbursement from the Contractor for amounts paid to the Architect as Additional Services for delays attributed to the Contractor.

ARTICLE 9 PAYMENTS AND COMPLETION

§ 9.1 Contract Sum

§ 9.1.1 The Contract Sum is stated in the Agreement and, including authorized adjustments, is the total amount payable by the Owner to the Contractor for performance of the Work under the Contract Documents.

§ 9.1.2 If unit prices are stated in the Contract Documents or subsequently agreed upon, and if quantities originally contemplated are materially changed so that application of such unit prices to the actual quantities causes substantial inequity to the Owner or Contractor, the applicable unit prices shall be equitably adjusted.

§ 9.2 Schedule of Values

Where the Contract is based on a stipulated sum or Guaranteed Maximum Price, the Contractor shall submit a schedule of values to the Architect before the first Application for Payment, allocating the entire Contract Sum to the various portions of the Work. The schedule of values shall be prepared in the form, and supported by the data to substantiate its accuracy, required by the Architect. This schedule, unless objected to by the Architect, shall be used as a basis for reviewing the Contractor's Applications for Payment. Any changes to the schedule of values shall be submitted to the Architect and supported by such data to substantiate its accuracy as the Architect may require, and unless objected to by the Architect, shall be used as a basis for reviewing the Contractor's subsequent Applications for Payment.

§ 9.3 Applications for Payment

§ 9.3.1 At least ten days before the date established for each progress payment, the Contractor shall submit to the Architect an itemized Application for Payment prepared in accordance with the schedule of values, if required under Section 9.2, for completed portions of the Work. The application shall be notarized, if required, and supported by all data substantiating the Contractor's right to payment that the Owner or Architect require, such as copies of requisitions, and releases and waivers of liens from Subcontractors and suppliers, and shall reflect retainage if provided for in the Contract Documents. The form of Application for Payment shall be a notarized AIA Document G702, Application and Certificate for Payment, supported by AIA Document G703, Continuation Sheet.

§ 9.3.1.1 As provided in Section 7.3.9, such applications may include requests for payment on account of changes in the Work that have been properly authorized by Construction Change Directives, or by interim determinations of the Architect, but not yet included in Change Orders.

§ 9.3.1.2 Applications for Payment shall not include requests for payment for portions of the Work for which the Contractor does not intend to pay a Subcontractor or supplier, unless such Work has been performed by others whom the Contractor intends to pay.

§ 9.3.1.3 The Owner will retain five percent (5%) of each Application for Payment in accordance with Section 573.12 of the Code of Iowa:

- **.1** Retainage will be held 30 days after completion and final acceptance of the Work, unless otherwise requested by the Contractor in accordance with Section 26.13 of the Code of Iowa.
  - **.1** At the end of the 30 day period, the Owner will continue to hold double the total amount of all claims on file and the estimated value of incomplete work.
- **.2** A request for early release of retained funds will only be considered upon completion of the following:

.1 Substantial Completion of the Work substantiated by an executed Certificate of Substantial Completion.

.2 Notification to all known suppliers, subcontractors, and sub-subcontractors of the Contractors intent to request a release of retained funds in compliance with Section 26.13 of the Code of Iowa.

.3 Receipt of an itemized, tabulated list prepared by the Contractor of all incomplete or nonconforming work items, including valuation of each work item listed. Include separate columns for labor and material for each item listed. Upon approval, this list shall be incorporated into the Schedule of Values for subsequent payment applications. All values shall be listed as double the estimated value of work item.

.4 G706 - Contractor's Affidavit of Payment of Debts and Claims.

.5 G706A - Contractor's Affidavit of Release of Liens.

.6 G707 - Consent of Surety to Final Payment.

.7 Evidence of continuation of liability coverage, including coverage for completed operations in accordance Section 11.1 of AIA General Conditions.

§ 9.3.2 Unless otherwise provided in the Contract Documents, payments shall be made on account of materials and equipment delivered and suitably stored at the site for subsequent incorporation in the Work. If approved in advance by the Owner, payment may similarly be made for materials and equipment suitably stored off the site at a location agreed upon in writing. Payment for materials and equipment stored on or off the site shall be conditioned upon compliance by the Contractor with procedures satisfactory to the Owner to establish the Owner's title to such materials and equipment or otherwise protect the Owner's interest, and shall include the costs of applicable insurance, storage, and transportation to the site, for such materials and equipment stored off the site.

§ 9.3.3 The Contractor warrants that title to all Work covered by an Application for Payment will pass to the Owner no later than the time of payment. The Contractor further warrants that upon submittal of an Application for Payment all Work for which Certificates for Payment have been previously issued and payments received from the Owner shall, to the best of the Contractor's knowledge, information, and belief, be free and clear of liens, claims, security interests, or encumbrances, in favor of the Contractor, Subcontractors, suppliers, or other persons or entities that provided labor, materials, and equipment relating to the Work.

§ 9.4 Certificates for Payment

§ 9.4.1 The Architect will, within seven days after receipt of the Contractor's Application for Payment, either (1) issue to the Owner a Certificate for Payment in the full amount of the Application for Payment, with a copy to the Contractor; or (2) issue to the Owner a Certificate for Payment for such amount as the Architect determines is properly due, and notify the Contractor and Owner of the Architect's reasons for withholding certification in part as provided in Section 9.5.1; or (3) withhold certification of the entire Application for Payment, and notify the Contractor and Owner of the Architect's reason for withholding certification in whole as provided in Section 9.5.1.

§ 9.4.2 The issuance of a Certificate for Payment will constitute a representation by the Architect to the Owner, based on the Architect's evaluation of the Work and the data in the Application for Payment, that, to the best of the Architect's knowledge, information, and belief, the Work has progressed to the point indicated, the quality of the Work is in accordance with the Contract Documents, and that the Contractor is entitled to payment in the amount certified. The foregoing representations are subject to an evaluation of the Work for conformance with the Contract Documents upon Substantial Completion, to results of subsequent tests and inspections, to correction of minor deviations from the Contract Documents prior to completion, and to specific qualifications expressed by the Architect. However, the issuance of a Certificate for Payment will not be a representation that the Architect has (1) made exhaustive or continuous on-site inspections to check the quality or quantity of the Work; (2) reviewed construction means, methods, techniques, sequences, or procedures; (3) reviewed copies of requisitions received from Subcontractors and suppliers and other data requested by the Owner to substantiate the Contractor's right to payment; or (4) made examination to ascertain how or for what purpose the Contractor has used money previously paid on account of the Contract Sum.

§ 9.5 Decisions to Withhold Certification

§ 9.5.1 The Architect may withhold a Certificate for Payment in whole or in part, to the extent reasonably necessary to protect the Owner, if in the Architect's opinion the representations to the Owner required by Section 9.4.2 cannot be made. If the Architect is unable to certify payment in the amount of the Application, the Architect will notify the Contractor and Owner as provided in Section 9.4.1. If the Contractor and Architect cannot agree on a revised amount, the Architect will promptly issue a Certificate for Payment for the amount for which the Architect is able to make such representations to the Owner. The Architect may also withhold a Certificate for Payment or, because of subsequently discovered evidence, may nullify the whole or a part of a Certificate for Payment previously issued, to such extent as may be necessary in the Architect's opinion to protect the Owner from loss for which the Contractor is responsible, including loss resulting from acts and omissions described in Section 3.3.2, because of

- **.1** defective Work not remedied;
- **.2** third party claims filed or reasonable evidence indicating probable filing of such claims, unless security acceptable to the Owner is provided by the Contractor;
- **.3** failure of the Contractor to make payments properly to Subcontractors or suppliers for labor, materials or equipment;
- **.4** reasonable evidence that the Work cannot be completed for the unpaid balance of the Contract Sum;
- **.5** damage to the Owner or a Separate Contractor;
- **.6** reasonable evidence that the Work will not be completed within the Contract Time, and that the unpaid balance would not be adequate to cover actual or liquidated damages for the anticipated delay; or
- **.7** repeated failure to carry out the Work in accordance with the Contract Documents.

§ 9.5.2 When either party disputes the Architect's decision regarding a Certificate for Payment under Section 9.5.1, in whole or in part, that party may submit a Claim in accordance with Article 15.

~~**§ 9.5.3** When the reasons for withholding certification are removed, certification will be made for amounts previously withheld.~~

§ 9.5.4 If the Architect withholds certification for payment under Section 9.5.1.3, the Owner may, at its sole option, issue joint checks to the Contractor and to any Subcontractor or supplier to whom the Contractor failed to make payment for Work properly performed or material or equipment suitably delivered. If the Owner makes payments by joint check, the Owner shall notify the Architect and the Contractor shall reflect such payment on its next Application for Payment.

§ 9.6 Progress Payments

§ 9.6.1 After the Architect has issued a Certificate for Payment, the Owner shall make payment in the manner and within the time provided in the Contract Documents, and shall so notify the Architect.

§ 9.6.2 The Contractor shall pay each Subcontractor, no later than seven days after receipt of payment from the Owner, the amount to which the Subcontractor is entitled, reflecting percentages actually retained from payments to the Contractor on account of the Subcontractor's portion of the Work. The Contractor shall, by appropriate agreement with each Subcontractor, require each Subcontractor to make payments to Sub-subcontractors in a similar manner.

§ 9.6.3 The Architect will, on request, furnish to a Subcontractor, if practicable, information regarding percentages of completion or amounts applied for by the Contractor and action taken thereon by the Architect and Owner on account of portions of the Work done by such Subcontractor.

§ 9.6.4 ~~The Owner has the right to request written evidence from the Contractor that the Contractor has properly paid Subcontractors and suppliers amounts paid by the Owner to the Contractor for subcontracted Work. If the Contractor fails to furnish such evidence within seven days, the Owner shall have the right to contact Subcontractors and suppliers to ascertain whether they have been properly paid.~~ Neither the Owner nor Architect shall have an obligation to pay, or to see to the payment of money to, a Subcontractor or supplier, except as may otherwise be required by law.

§ 9.6.5 The Contractor's payments to suppliers shall be treated in a manner similar to that provided in Sections 9.6.2, 9.6.3 and 9.6.4.

§ 9.6.6 A Certificate for Payment, a progress payment, or partial or entire use or occupancy of the Project by the Owner shall not constitute acceptance of Work not in accordance with the Contract Documents.

§ 9.6.7 Unless the Contractor provides the Owner with a payment bond in the full penal sum of the Contract Sum, payments received by the Contractor for Work properly performed by Subcontractors or provided by suppliers shall be held by the Contractor for those Subcontractors or suppliers who performed Work or furnished materials, or both, under contract with the Contractor for which payment was made by the Owner. Nothing contained herein shall require money to be placed in a separate account and not commingled with money of the Contractor, create any fiduciary liability or tort liability on the part of the Contractor for breach of trust, or entitle any person or entity to an award of punitive damages against the Contractor for breach of the requirements of this provision.

§ 9.6.8 Provided the Owner has fulfilled its payment obligations under the Contract Documents, the Contractor shall defend and indemnify the Owner from all loss, liability, damage or expense, including reasonable attorney's fees and litigation expenses, arising out of any lien claim or other claim for payment by any Subcontractor or supplier of any tier. Upon receipt of notice of a lien claim or other claim for payment, the Owner shall notify the Contractor. If approved by the applicable court, when required, the Contractor may substitute a surety bond for the property against which the lien or other claim for payment has been asserted.

§ 9.7 Failure of Payment

If the Architect does not issue a Certificate for Payment, through no fault of the Contractor, within seven days after receipt of the Contractor's Application for Payment, or if the Owner does not pay the Contractor within seven days after the date established in the Contract Documents, the amount certified by the Architect or awarded by binding dispute resolution, then the Contractor may, upon seven additional days' notice to the Owner and Architect, stop the Work until payment of the amount owing has been received. The Contract Time shall be extended appropriately and the Contract Sum shall be increased by the amount of the Contractor's reasonable costs of shutdown, delay and start-up, plus interest as provided for in the Contract Documents.

§ 9.8 Substantial Completion

§ 9.8.1 Substantial Completion is the stage in the progress of the Work when the Work or designated portion thereof is sufficiently complete in accordance with the Contract Documents so that the Owner can occupy or utilize the Work for its intended use.

§ 9.8.2 When the Contractor considers that the Work, or a portion thereof which the Owner agrees to accept separately, is substantially complete, the Contractor shall prepare and submit to the Architect a comprehensive list of items to be completed or corrected prior to final payment. Failure to include an item on such list does not alter the responsibility of the Contractor to complete all Work in accordance with the Contract Documents.

§ 9.8.3 Upon receipt of the Contractor's list, the Architect will make an inspection to determine whether the Work or designated portion thereof is substantially complete. If the Architect's inspection discloses any item, whether or not included on the Contractor's list, which is not sufficiently complete in accordance with the Contract Documents so that the Owner can occupy or utilize the Work or designated portion thereof for its intended use, the Contractor shall, before issuance of the Certificate of Substantial Completion, complete or correct such item upon notification by the Architect. In such case, the Contractor shall then submit a request for another inspection by the Architect to determine Substantial Completion.

§ 9.8.3.1 The Architect shall not be required to make inspections to determine Substantial Completion when the Work is not sufficiently complete or will result in extensive lists of items to be completed or corrected. When the Work is not sufficiently complete and such inspections are requested by the Contractor or are necessary to allow Owner occupancy by the required substantial completion date, the Owner shall have the right to deduct from the Contract Sum amounts paid to the Architect for additional services to conduct such inspections.

§ 9.8.3.2 The Architect's inspection of any portion of the Work to determine whether such portion of the Work is substantially complete will be limited to an initial inspection and one (1) re-inspection. Additional re-inspections will be made only with the consent of the Owner after notification by the Architect. The Owner shall be entitled to deduct from the Contract Sum amounts paid to the Architect for such additional re-inspections.

§ 9.8.4 When the Work or designated portion thereof is substantially complete, the Architect will prepare a Certificate of Substantial Completion that shall establish the date of Substantial Completion; establish responsibilities of the Owner and Contractor for security, maintenance, heat, utilities, damage to the Work and insurance; and fix the time within which the Contractor shall finish all items on the list accompanying the Certificate. Warranties required by the Contract Documents shall commence on the date of Substantial Completion of the Work or designated portion thereof unless otherwise provided in the Certificate of Substantial Completion.

§ 9.8.5 The Certificate of Substantial Completion shall be submitted to the Owner and Contractor for their written acceptance of responsibilities assigned to them in ~~the~~ such Certificate. ~~Upon such acceptance, and consent of surety if any, the Owner shall make payment of retainage applying to the Work or designated portion thereof. Such payment shall be adjusted for Work that is incomplete or not in accordance with the requirements of the Contract Documents.~~

§ 9.9 Partial Occupancy or Use

§ 9.9.1 The Owner may occupy or use any completed or partially completed portion of the Work at any stage when such portion is designated by separate agreement with the Contractor, provided such occupancy or use is consented to by the insurer and authorized by public authorities having jurisdiction over the Project. Such partial occupancy or use may commence whether or not the portion is substantially complete, provided the Owner and Contractor have accepted in writing the responsibilities assigned to each of them for payments, retainage, if any, security, maintenance, heat, utilities, damage to the Work and insurance, and have agreed in writing concerning the period for correction of the Work and commencement of warranties required by the Contract Documents. When the Contractor considers a portion substantially complete, the Contractor shall prepare and submit a list to the Architect as provided under Section 9.8.2. Consent of the Contractor to partial occupancy or use shall not be unreasonably withheld. The stage of the progress of the Work shall be determined by written agreement between the Owner and Contractor or, if no agreement is reached, by decision of the Architect.

§ 9.9.2 Immediately prior to such partial occupancy or use, the Owner, Contractor, and Architect shall jointly inspect the area to be occupied or portion of the Work to be used in order to determine and record the condition of the Work.

§ 9.9.3 Unless otherwise agreed upon, partial occupancy or use of a portion or portions of the Work shall not constitute acceptance of Work not complying with the requirements of the Contract Documents.

§ 9.10 Final Completion and Final Payment

§ 9.10.1 Upon receipt of the Contractor's notice that the Work is ready for final inspection and acceptance and upon receipt of a final Application for Payment, the Architect will promptly make such inspection. When the Architect finds the Work acceptable under the Contract Documents and the Contract fully performed, the Architect will promptly issue a final Certificate for Payment stating that to the best of the Architect's knowledge, information and belief, and on the basis of the Architect's on-site visits and inspections, the Work has been completed in accordance with the Contract Documents and that the entire balance found to be due the Contractor and noted in the final Certificate is due and payable. The Architect's final Certificate for Payment will constitute a further representation that conditions listed in Section 9.10.2 as precedent to the Contractor's being entitled to final payment have been fulfilled.

§ 9.10.1.1 The Architect's inspection of the Work to determine whether the Work is acceptable for Final Completion and Final Payment will be limited to one (1) inspection. Additional re-inspections will be made only with the consent of the Owner after notification by the Architect. The Owner shall be entitled to deduct from the Contract Sum amounts paid to the Architect for such additional re-inspections.

§ 9.10.2 Neither final payment nor any remaining retained percentage shall become due until the Contractor submits to the Architect (1) an affidavit that payrolls, bills for materials and equipment, and other indebtedness connected with the Work for which the Owner or the Owner's property might be responsible or encumbered (less amounts withheld

by Owner) have been paid or otherwise satisfied, (2) a certificate evidencing that insurance required by the Contract Documents to remain in force after final payment is currently in effect, (3) a written statement that the Contractor knows of no reason that the insurance will not be renewable to cover the period required by the Contract Documents, (4) consent of surety, if any, to final payment, (5) documentation of any special warranties, such as manufacturers' warranties or specific Subcontractor warranties, and (6) if required by the Owner, other data establishing payment or satisfaction of obligations, such as receipts and releases and waivers of liens, claims, security interests, or encumbrances arising out of the Contract, to the extent and in such form as may be designated by the Owner. If a Subcontractor refuses to furnish a release or waiver required by the Owner, the Contractor may furnish a bond satisfactory to the Owner to indemnify the Owner against such lien, claim, security interest, or encumbrance. If a lien, claim, security interest, or encumbrance remains unsatisfied after payments are made, the Contractor shall refund to the Owner all money that the Owner may be compelled to pay in discharging the lien, claim, security interest, or encumbrance, including all costs and reasonable attorneys' fees.

§ 9.10.3 If, after Substantial Completion of the Work, final completion thereof is materially delayed through no fault of the Contractor or by issuance of Change Orders affecting final completion, and the Architect so confirms, the Owner shall, upon application by the Contractor and certification by the Architect, and without terminating the Contract, make payment of the balance due for that portion of the Work fully completed, corrected, and accepted. If the remaining balance for Work not fully completed or corrected is less than retainage stipulated in the Contract Documents, and if bonds have been furnished, the written consent of the surety to payment of the balance due for that portion of the Work fully completed and accepted shall be submitted by the Contractor to the Architect prior to certification of such payment. Such payment shall be made under terms and conditions governing final payment, except that it shall not constitute a waiver of Claims.

§ 9.10.4 The making of final payment shall constitute a waiver of Claims by the Owner except those arising from

- **.1** liens, Claims, security interests, or encumbrances arising out of the Contract and unsettled;
- **.2** failure of the Work to comply with the requirements of the Contract Documents;
- **.3** terms of special warranties required by the Contract Documents; or
- **.4** audits performed by the Owner, if permitted by the Contract Documents, after final payment.

§ 9.10.5 Acceptance of final payment by the Contractor, a Subcontractor, or a supplier, shall constitute a waiver of claims by that payee except those previously made in writing and identified by that payee as unsettled at the time of final Application for Payment.

ARTICLE 10 PROTECTION OF PERSONS AND PROPERTY

§ 10.1 Safety Precautions and Programs

The Contractor shall be responsible for initiating, maintaining, and supervising all safety precautions and programs in connection with the performance of the Contract.

§ 10.2 Safety of Persons and Property

§ 10.2.1 The Contractor shall take reasonable precautions for safety of, and shall provide reasonable protection to prevent damage, injury, or loss to

- **.1** employees on the Work and other persons who may be affected thereby;
- **.2** the Work and materials and equipment to be incorporated therein, whether in storage on or off the site, under care, custody, or control of the Contractor, a Subcontractor, or a Sub-subcontractor; and
- **.3** other property at the site or adjacent thereto, such as trees, shrubs, lawns, walks, pavements, roadways, structures, and utilities not designated for removal, relocation, or replacement in the course of construction.

§ 10.2.2 The Contractor shall comply with, and give notices required by applicable laws, statutes, ordinances, codes, rules and regulations, and lawful orders of public authorities, bearing on safety of persons or property or their protection from damage, injury, or loss.

§ 10.2.3 The Contractor shall implement, erect, and maintain, as required by existing conditions and performance of the Contract, reasonable safeguards for safety and protection, including posting danger signs and other warnings against hazards; promulgating safety regulations; and notifying the owners and users of adjacent sites and utilities of the safeguards.

§ 10.2.4 When use or storage of explosives or other hazardous materials or equipment, or unusual methods are necessary for execution of the Work, the Contractor shall exercise utmost care and carry on such activities under supervision of properly qualified personnel.

§ 10.2.5 The Contractor shall promptly remedy damage and loss (other than damage or loss insured under property insurance required by the Contract Documents) to property referred to in Sections 10.2.1.2 and 10.2.1.3 caused in whole or in part by the Contractor, a Subcontractor, a Sub-subcontractor, or anyone directly or indirectly employed by any of them, or by anyone for whose acts they may be liable and for which the Contractor is responsible under Sections 10.2.1.2 and 10.2.1.3. The Contractor may make a Claim for the cost to remedy the damage or loss to the extent such damage or loss is attributable to the negligent acts, errors, or omissions of the Owner or Architect or anyone directly or indirectly employed by either of them, or by anyone for whose acts either of them may be liable, and not attributable to the fault or negligence of the Contractor. The foregoing obligations of the Contractor are in addition to the Contractor's obligations under Section 3.18.

§ 10.2.6 The Contractor shall designate a responsible member of the Contractor's organization at the site whose duty shall be the prevention of accidents. This person shall be the Contractor's superintendent unless otherwise designated by the Contractor in writing to the Owner and Architect.

§ 10.2.7 The Contractor shall not permit any part of the construction or site to be loaded so as to cause damage or create an unsafe condition.

§ 10.2.8 Injury or Damage to Person or Property
If either party suffers injury or damage to person or property because of an act or omission of the other party, or of others for whose acts such party is legally responsible, notice of the injury or damage, whether or not insured, shall be given to the other party within a reasonable time not exceeding 21 days after discovery. The notice shall provide sufficient detail to enable the other party to investigate the matter.

§ 10.3 Hazardous Materials and Substances
§ 10.3.1 The Contractor is responsible for compliance with any requirements included in the Contract Documents regarding hazardous materials or substances. If the Contractor encounters a hazardous material or substance not addressed in the Contract Documents and if reasonable precautions will be inadequate to prevent foreseeable bodily injury or death to persons resulting from a material or substance, including but not limited to asbestos or polychlorinated biphenyl (PCB), encountered on the site by the Contractor, the Contractor shall, upon recognizing the condition, immediately stop Work in the affected area and notify the Owner and Architect of the condition.

§ 10.3.2 Upon receipt of the Contractor's notice, the Owner shall obtain the services of a licensed laboratory to verify the presence or absence of the material or substance reported by the Contractor and, in the event such material or substance is found to be present, to cause it to be rendered harmless. Unless otherwise required by the Contract Documents, the Owner shall furnish in writing to the Contractor and Architect the names and qualifications of persons or entities who are to perform tests verifying the presence or absence of the material or substance or who are to perform the task of removal or safe containment of the material or substance. The Contractor and the Architect will promptly reply to the Owner in writing stating whether or not either has reasonable objection to the persons or entities proposed by the Owner. If either the Contractor or Architect has an objection to a person or entity proposed by the Owner, the Owner shall propose another to whom the Contractor and the Architect have no reasonable objection. When the material or substance has been rendered harmless, Work in the affected area shall resume upon written agreement of the Owner and Contractor. By Change Order, the Contract Time shall be extended appropriately and the Contract Sum shall be increased by the amount of the Contractor's reasonable additional costs of shutdown, delay, and start-up.

§ 10.3.3 To the fullest extent permitted by law, the Owner shall defend, indemnify and hold harmless the Contractor, Subcontractors, Architect, Architect's consultants, and agents and employees of any of them from and against any and all claims, damages, losses, and expenses, including but not limited to attorneys' fees, arising out of or resulting from performance of the Work in the affected area if in fact the material or substance presents the risk of bodily injury or death as described in Section 10.3.1 and has not been rendered harmless, provided that such claim, damage, loss, or expense is attributable to bodily injury, sickness, disease or death, or to injury to or destruction of tangible property (other than the Work itself), except to the extent that such damage, loss, or expense is due to the fault or negligence of the party seeking indemnity.

§ 10.3.4 The Owner shall not be responsible under this Section 10.3 for hazardous materials or substances the Contractor brings to the site unless such materials or substances are required by the Contract Documents. The Owner shall be responsible for hazardous materials or substances required by the Contract Documents, except to the extent of the Contractor's fault or negligence in the use and handling of such materials or substances.

§ 10.3.5 The Contractor shall reimburse the Owner for the cost and expense the Owner incurs (1) for remediation of hazardous materials or substances the Contractor brings to the site and negligently handles, or (2) where the Contractor fails to perform its obligations under Section 10.3.1, except to the extent that the cost and expense are due to the Owner's fault or negligence.

§ 10.3.6 If, without negligence on the part of the Contractor, the Contractor is held liable by a government agency for the cost of remediation of a hazardous material or substance solely by reason of performing Work as required by the Contract Documents, the Owner shall reimburse the Contractor for all cost and expense thereby incurred.

§ 10.4 Emergencies
In an emergency affecting safety of persons or property, the Contractor shall act, at the Contractor's discretion, to prevent threatened damage, injury, or loss. Additional compensation or extension of time claimed by the Contractor on account of an emergency shall be determined as provided in Article 15 and Article 7.

ARTICLE 11 INSURANCE AND BONDS

§ 11.1 Contractor's Insurance and Bonds
§ 11.1.1 The Contractor shall purchase and maintain insurance of the types and limits of liability, containing the endorsements, and subject to the terms and conditions, as described in the Agreement or elsewhere in the Contract Documents. The Contractor shall purchase and maintain the required insurance from an insurance company or insurance companies lawfully authorized to issue insurance in the jurisdiction where the Project is located. The Owner, Architect, and Architect's consultants shall be named as additional insureds under the Contractor's commercial general liability policy or as otherwise described in the Contract Documents.

§ 11.1.2 The Contractor shall provide surety bonds of the types, for such penal sums, and subject to such terms and conditions as required by the Contract Documents. The Contractor shall purchase and maintain the required bonds from a company or companies lawfully authorized to issue surety bonds in the jurisdiction where the Project is located.

§ 11.1.3 Upon the request of any person or entity appearing to be a potential beneficiary of bonds covering payment of obligations arising under the Contract, the Contractor shall promptly furnish a copy of the bonds or shall authorize a copy to be furnished.

§ 11.1.4 Notice of Cancellation or Expiration of Contractor's Required Insurance. Within three (3) business days of the date the Contractor becomes aware of an impending or actual cancellation or expiration of any insurance required by the Contract Documents, the Contractor shall provide notice to the Owner of such impending or actual cancellation or expiration. Upon receipt of notice from the Contractor, the Owner shall, unless the lapse in coverage arises from an act or omission of the Owner, have the right to stop the Work until the lapse in coverage has been cured by the procurement of replacement coverage by the Contractor. The furnishing of notice by the Contractor shall not relieve the Contractor of any contractual obligation to provide any required coverage.

§ 11.2 Owner's Insurance

§ 11.2.1 The Owner shall purchase and maintain insurance of the types and limits of liability, containing the endorsements, and subject to the terms and conditions, as described in the Agreement or elsewhere in the Contract Documents. The Owner shall purchase and maintain the required insurance from an insurance company or insurance companies lawfully authorized to issue insurance in the jurisdiction where the Project is located.

§ 11.2.2 Failure to Purchase Required Property Insurance. If the Owner fails to purchase and maintain the required property insurance, with all of the coverages and in the amounts described in the Agreement or elsewhere in the Contract Documents, the Owner shall inform the Contractor in writing prior to commencement of the Work. Upon receipt of notice from the Owner, the Contractor may delay commencement of the Work and may obtain insurance that will protect the interests of the Contractor, Subcontractors, and Sub-Subcontractors in the Work. When the failure to provide coverage has been cured or resolved, the Contract Sum and Contract Time shall be equitably adjusted. In the event the Owner fails to procure coverage, the Owner waives all rights against the Contractor, Subcontractors, and Sub-subcontractors to the extent the loss to the Owner would have been covered by the insurance to have been procured by the Owner. The cost of the insurance shall be charged to the Owner by a Change Order. If the Owner does not provide written notice, and the Contractor is damaged by the failure or neglect of the Owner to purchase or maintain the required insurance, the Owner shall reimburse the Contractor for all reasonable costs and damages attributable thereto.

§ 11.2.3 Notice of Cancellation or Expiration of Owner's Required Property Insurance. Within three (3) business days of the date the Owner becomes aware of an impending or actual cancellation or expiration of any property insurance required by the Contract Documents, the Owner shall provide notice to the Contractor of such impending or actual cancellation or expiration. Unless the lapse in coverage arises from an act or omission of the Contractor: (1) the Contractor, upon receipt of notice from the Owner, shall have the right to stop the Work until the lapse in coverage has been cured by the procurement of replacement coverage by either the Owner or the Contractor; (2) the Contract Time and Contract Sum shall be equitably adjusted; and (3) the Owner waives all rights against the Contractor, Subcontractors, and Sub-subcontractors to the extent any loss to the Owner would have been covered by the insurance had it not expired or been cancelled. If the Contractor purchases replacement coverage, the cost of the insurance shall be charged to the Owner by an appropriate Change Order. The furnishing of notice by the Owner shall not relieve the Owner of any contractual obligation to provide required insurance.

§ 11.3 Waivers of Subrogation

§ 11.3.1 The Owner and Contractor waive all rights against (1) each other and any of their subcontractors, sub-subcontractors, agents, and employees, each of the other; (2) the Architect and Architect's consultants; and (3) Separate Contractors, if any, and any of their subcontractors, sub-subcontractors, agents, and employees, for damages caused by fire, or other causes of loss, to the extent those losses are covered by property insurance required by the Agreement or other property insurance applicable to the Project, except such rights as they have to proceeds of such insurance. The Owner or Contractor, as appropriate, shall require similar written waivers in favor of the individuals and entities identified above from the Architect, Architect's consultants, Separate Contractors, subcontractors, and sub-subcontractors. The policies of insurance purchased and maintained by each person or entity agreeing to waive claims pursuant to this section 11.3.1 shall not prohibit this waiver of subrogation. This waiver of subrogation shall be effective as to a person or entity (1) even though that person or entity would otherwise have a duty of indemnification, contractual or otherwise, (2) even though that person or entity did not pay the insurance premium directly or indirectly, or (3) whether or not the person or entity had an insurable interest in the damaged property.

§ 11.3.2 If during the Project construction period the Owner insures properties, real or personal or both, at or adjacent to the site by property insurance under policies separate from those insuring the Project, or if after final payment property insurance is to be provided on the completed Project through a policy or policies other than those insuring the Project during the construction period, to the extent permissible by such policies, the Owner waives all rights in accordance with the terms of Section 11.3.1 for damages caused by fire or other causes of loss covered by this separate property insurance.

§ 11.4 Loss of Use, Business Interruption, and Delay in Completion Insurance

The Owner, at the Owner's option, may purchase and maintain insurance that will protect the Owner against loss of use of the Owner's property, or the inability to conduct normal operations, due to fire or other causes of loss. The Owner waives all rights of action against the Contractor and Architect for loss of use of the Owner's property, due to fire or other hazards however caused.

§11.5 Adjustment and Settlement of Insured Loss

§ 11.5.1 A loss insured under the property insurance required by the Agreement shall be adjusted by the Owner as fiduciary and made payable to the Owner as fiduciary for the insureds, as their interests may appear, subject to requirements of any applicable mortgagee clause and of Section 11.5.2. The Owner shall pay the Architect and Contractor their just shares of insurance proceeds received by the Owner, and by appropriate agreements the Architect and Contractor shall make payments to their consultants and Subcontractors in similar manner.

§ 11.5.2 Prior to settlement of an insured loss, the Owner shall notify the Contractor of the terms of the proposed settlement as well as the proposed allocation of the insurance proceeds. The Contractor shall have 14 days from receipt of notice to object to the proposed settlement or allocation of the proceeds. If the Contractor does not object, the Owner shall settle the loss and the Contractor shall be bound by the settlement and allocation. Upon receipt, the Owner shall deposit the insurance proceeds in a separate account and make the appropriate distributions. Thereafter, if no other agreement is made or the Owner does not terminate the Contract for convenience, the Owner and Contractor shall execute a Change Order for reconstruction of the damaged or destroyed Work in the amount allocated for that purpose. If the Contractor timely objects to either the terms of the proposed settlement or the allocation of the proceeds, the Owner may proceed to settle the insured loss, and any dispute between the Owner and Contractor arising out of the settlement or allocation of the proceeds shall be resolved pursuant to Article 15. Pending resolution of any dispute, the Owner may issue a Construction Change Directive for the reconstruction of the damaged or destroyed Work.

ARTICLE 12 UNCOVERING AND CORRECTION OF WORK

§ 12.1 Uncovering of Work

§ 12.1.1 If a portion of the Work is covered contrary to the Architect's request or to requirements specifically expressed in the Contract Documents, it must, if requested in writing by the Architect, be uncovered for the Architect's examination and be replaced at the Contractor's expense without change in the Contract Time.

§ 12.1.2 If a portion of the Work has been covered that the Architect has not specifically requested to examine prior to its being covered, the Architect may request to see such Work and it shall be uncovered by the Contractor. If such Work is in accordance with the Contract Documents, the Contractor shall be entitled to an equitable adjustment to the Contract Sum and Contract Time as may be appropriate. If such Work is not in accordance with the Contract Documents, the costs of uncovering the Work, and the cost of correction, shall be at the Contractor's expense.

§ 12.2 Correction of Work

§ 12.2.1 Before Substantial Completion

The Contractor shall promptly correct Work rejected by the Architect or failing to conform to the requirements of the Contract Documents, discovered before Substantial Completion and whether or not fabricated, installed or completed. Costs of correcting such rejected Work, including additional testing and inspections, the cost of uncovering and replacement, and compensation for the Architect's services and expenses made necessary thereby, shall be at the Contractor's expense.

§ 12.2.2 After Substantial Completion

§ 12.2.2.1 In addition to the Contractor's obligations under Section 3.5, if, within one year after the date of Substantial Completion of the Work or designated portion thereof or after the date for commencement of warranties established under Section 9.9.1, or by terms of any applicable special warranty required by the Contract Documents, any of the Work is found to be not in accordance with the requirements of the Contract Documents, the Contractor shall correct it promptly after receipt of notice from the Owner to do so, unless the Owner has previously given the Contractor a written acceptance of such condition. The Owner shall give such notice promptly after discovery of the condition. During the one-year period for correction of Work, if the Owner fails to notify the Contractor and give the Contractor an opportunity to make the correction, the Owner waives the rights to require correction by the Contractor and to make

a claim for breach of warranty. If the Contractor fails to correct nonconforming Work within a reasonable time during that period after receipt of notice from the Owner or Architect, the Owner may correct it in accordance with Section 2.5.

§ 12.2.2.2 The one-year period for correction of Work shall be extended with respect to portions of Work first performed after Substantial Completion by the period of time between Substantial Completion and the actual completion of that portion of the Work.

§ 12.2.2.3 The one-year period for correction of Work shall not be extended by corrective Work performed by the Contractor pursuant to this Section 12.2.

§ 12.2.3 The Contractor shall remove from the site portions of the Work that are not in accordance with the requirements of the Contract Documents and are neither corrected by the Contractor nor accepted by the Owner.

§ 12.2.4 The Contractor shall bear the cost of correcting destroyed or damaged construction of the Owner or Separate Contractors, whether completed or partially completed, caused by the Contractor's correction or removal of Work that is not in accordance with the requirements of the Contract Documents.

§ 12.2.5 Nothing contained in this Section 12.2 shall be construed to establish a period of limitation with respect to other obligations the Contractor has under the Contract Documents. Establishment of the one-year period for correction of Work as described in Section 12.2.2 relates only to the specific obligation of the Contractor to correct the Work, and has no relationship to the time within which the obligation to comply with the Contract Documents may be sought to be enforced, nor to the time within which proceedings may be commenced to establish the Contractor's liability with respect to the Contractor's obligations other than specifically to correct the Work.

§ 12.3 Acceptance of Nonconforming Work
If the Owner prefers to accept Work that is not in accordance with the requirements of the Contract Documents, the Owner may do so instead of requiring its removal and correction, in which case the Contract Sum will be reduced as appropriate and equitable. Such adjustment shall be effected whether or not final payment has been made.

ARTICLE 13 MISCELLANEOUS PROVISIONS

§ 13.1 Governing Law
The Contract shall be governed by the law of the place where the Project is located~~, excluding that jurisdiction's choice of law rules. If the parties have selected arbitration as the method of binding dispute resolution, the Federal Arbitration Act shall govern Section 15.4~~.

§ 13.1.1 Compliance with Law Provision: The Contractor agrees that he will comply with all applicable Federal, State, and local laws, statutes, codes, rules, and regulations having jurisdiction over the Project. Contractor shall take all necessary precautions to keep the site and work in compliance with the safety and health regulations for construction issued by the Bureau of Labor Standards of the U.S. Department of Labor as well as the Occupational Safety and Health Standards, parts 1910 and 1926 as amended and as enforced by the State of Iowa.

§ 13.2 Successors and Assigns
§ 13.2.1 The Owner and Contractor respectively bind themselves, their partners, successors, assigns, and legal representatives to covenants, agreements, and obligations contained in the Contract Documents. Except as provided in Section 13.2.2, neither party to the Contract shall assign the Contract as a whole without written consent of the other. If either party attempts to make an assignment without such consent, that party shall nevertheless remain legally responsible for all obligations under the Contract.

§ 13.2.2 The Owner may, without consent of the Contractor, assign the Contract to a lender providing construction financing for the Project, if the lender assumes the Owner's rights and obligations under the Contract Documents. The Contractor shall execute all consents reasonably required to facilitate the assignment.

§ 13.3 Rights and Remedies
§ 13.3.1 Duties and obligations imposed by the Contract Documents and rights and remedies available thereunder shall be in addition to and not a limitation of duties, obligations, rights, and remedies otherwise imposed or available by law.

§ 13.3.2 No action or failure to act by the Owner, Architect, or Contractor shall constitute a waiver of a right or duty afforded them under the Contract, nor shall such action or failure to act constitute approval of or acquiescence in a breach thereunder, except as may be specifically agreed upon in writing.

§ 13.4 Tests and Inspections
§ 13.4.1 Tests, inspections, and approvals of portions of the Work shall be made as required by the Contract Documents and by applicable laws, statutes, ordinances, codes, rules, and regulations or lawful orders of public authorities. Unless otherwise provided, the Contractor shall make arrangements for such tests, inspections, and approvals with an independent testing laboratory or entity acceptable to the Owner, or with the appropriate public authority, and shall bear all related costs of tests, inspections, and approvals. The Contractor shall give the Architect timely notice of when and where tests and inspections are to be made so that the Architect may be present for such procedures. The Owner shall bear costs of tests, inspections, or approvals that do not become requirements until after bids are received or negotiations concluded. The Owner shall directly arrange and pay for tests, inspections, or approvals where building codes or applicable laws or regulations so require.

§ 13.4.2 If the Architect, Owner, or public authorities having jurisdiction determine that portions of the Work require additional testing, inspection, or approval not included under Section 13.4.1, the Architect will, upon written authorization from the Owner, instruct the Contractor to make arrangements for such additional testing, inspection, or approval, by an entity acceptable to the Owner, and the Contractor shall give timely notice to the Architect of when and where tests and inspections are to be made so that the Architect may be present for such procedures. Such costs, except as provided in Section 13.4.3, shall be at the Owner's expense.

§ 13.4.3 If procedures for testing, inspection, or approval under Sections 13.4.1 and 13.4.2 reveal failure of the portions of the Work to comply with requirements established by the Contract Documents, all costs made necessary by such failure, including those of repeated procedures and compensation for the Architect's services and expenses, shall be at the Contractor's expense.

§ 13.4.4 Required certificates of testing, inspection, or approval shall, unless otherwise required by the Contract Documents, be secured by the Contractor and promptly delivered to the Architect.

§ 13.4.5 If the Architect is to observe tests, inspections, or approvals required by the Contract Documents, the Architect will do so promptly and, where practicable, at the normal place of testing.

§ 13.4.6 Tests or inspections conducted pursuant to the Contract Documents shall be made promptly to avoid unreasonable delay in the Work.

§ 13.5 Interest
Payments due and unpaid under the Contract Documents shall bear interest from the date payment is due at the rate the parties agree upon in writing or, in the absence thereof, at the legal rate prevailing from time to time at the place where the Project is located.

§ 13.6 Davis-Bacon and Related Acts
§ 13.6.1 Davis-Bacon and Related Acts: This project is funded, in part, by federal grants and funding. Rules and provisions of the Davis Bacon and Related Acts apply to this project. It is the responsibility of the Contractor to acquire current appropriate and necessary publications and materials regarding the Davis-Bacon and Related Acts and to comply with its rules and provisions as they apply to this Project.

§ 13.7 Community Development Block Grant (CDBG)

§ 13.7.1 This project is funded, in part, by a Federal Community Development Block Grant (CDBG) administered through the Iowa Economic Development Authority. Rules and regulations of the Federal Community Development Block Grant Program mandate that certain provisions and standards be invoked for development assisted projects.

§ 13.7.2 The Contractor shall comply with the provisions and standards as stated in Section 00 73 15 - Special Conditions of the Contract.

§ 13.7.3 The Contractor shall comply with the provisions and standards as stated in the current edition of the Federal Labor Standards Provisions, form HUD-4010.

§ 13.8 Minority owned and female owned business partiticipation

§ 13.8.1 Minority Owned and Female Owned Business participation is encouraged. Bidders shall make a good faith documented effort to encourage participation of minority owned and female owned businesses.

§ 13.8.2 The Contractor shall submit documentation to Owner's Representative identifying business contacted and contracts issued to minority owned and female owned businesses.

§ 13.9 Accounting records

§ 13.9.1 The Contractor shall maintain, or cause to be maintained, all books, records and all other financial documents pertaining to the Project in accordance with generally accepted accounting principles. Such records of the Contractor shall be available for inspection and copying by the Iowa Economic Development Authority or its designated agents, the Auditor of the State of Iowa, the Treasurer of the State of Iowa, the Attorney General of the State of Iowa and the Iowa Division of Criminal Investigation at all times within the term of this Agreement and during the term of any extension thereof, and for five (5) full years from the date of completion the Project. The Contractor shall cause the books, records and all other financial documents of its subcontractors and suppliers pertaining to the Project described in this Agreement to be available consistent with this paragraph.

§ 13.9.2 Within thirty (30) days of receipt of a written request, the Contractor shall deliver copies of all agreements or documents relating to the Project; copies of all invoices, receipts, statements or vouchers relating to the Project; a list of all unpaid bills for labor and materials in connection with the Project; and budgets and revisions showing estimated costs of the Project and funds required at any given time to complete and pay for the Project.

ARTICLE 14 TERMINATION OR SUSPENSION OF THE CONTRACT

§ 14.1 Termination by the Contractor

§ 14.1.1 The Contractor may terminate the Contract if the Work is stopped for a period of 30 consecutive days through no act or fault of the Contractor, a Subcontractor, a Sub-subcontractor, their agents or employees, or any other persons or entities performing portions of the Work, for any of the following reasons:

- **.1** Issuance of an order of a court or other public authority having jurisdiction that requires all Work to be stopped;
- **.2** An act of government, such as a declaration of national emergency, that requires all Work to be stopped;
- **.3** Because the Architect has not issued a Certificate for Payment and has not notified the Contractor of the reason for withholding certification as provided in Section 9.4.1, or because the Owner has not made payment on a Certificate for Payment within the time stated in the Contract Documents; or
- **.4** The Owner has failed to furnish to the Contractor reasonable evidence as required by Section 2.2.

§ 14.1.2 The Contractor may terminate the Contract if, through no act or fault of the Contractor, a Subcontractor, a Sub-subcontractor, their agents or employees, or any other persons or entities performing portions of the Work, repeated suspensions, delays, or interruptions of the entire Work by the Owner as described in Section 14.3, constitute in the aggregate more than 100 percent of the total number of days scheduled for completion, or 120 days in any 365-day period, whichever is less.

§ 14.1.3 If one of the reasons described in Section 14.1.1 or 14.1.2 exists, the Contractor may, upon seven days' notice to the Owner and Architect, terminate the Contract and recover from the Owner payment for Work executed, as well as reasonable overhead and profit on Work not executed, and costs incurred by reason of such termination.

§ 14.1.4 If the Work is stopped for a period of 60 consecutive days through no act or fault of the Contractor, a Subcontractor, a Sub- subcontractor, or their agents or employees or any other persons or entities performing portions of the Work because the Owner has repeatedly failed to fulfill the Owner's obligations under the Contract Documents with respect to matters important to the progress of the Work, the Contractor may, upon seven additional days' notice to the Owner and the Architect, terminate the Contract and recover from the Owner as provided in Section 14.1.3.

§ 14.2 Termination by the Owner for Cause

§ 14.2.1 The Owner may terminate the Contract if the Contractor

- **.1** repeatedly refuses or fails to supply enough properly skilled workers or proper materials;
- **.2** fails to make payment to Subcontractors or suppliers in accordance with the respective agreements between the Contractor and the Subcontractors or suppliers;
- **.3** repeatedly disregards applicable laws, statutes, ordinances, codes, rules and regulations, or lawful orders of a public authority; or
- **.4** otherwise is guilty of substantial breach of a provision of the Contract Documents.

§ 14.2.2 When any of the reasons described in Section 14.2.1 exist, and upon certification by the Architect that sufficient cause exists to justify such action, the Owner may, without prejudice to any other rights or remedies of the Owner and after giving the Contractor and the Contractor's surety, if any, seven days' notice, terminate employment of the Contractor and may, subject to any prior rights of the surety:

- **.1** Exclude the Contractor from the site and take possession of all materials, equipment, tools, and construction equipment and machinery thereon owned by the Contractor;
- **.2** Accept assignment of subcontracts pursuant to Section 5.4; and
- **.3** Finish the Work by whatever reasonable method the Owner may deem expedient. Upon written request of the Contractor, the Owner shall furnish to the Contractor a detailed accounting of the costs incurred by the Owner in finishing the Work.

§ 14.2.3 When the Owner terminates the Contract for one of the reasons stated in Section 14.2.1, the Contractor shall not be entitled to receive further payment until the Work is finished.

§ 14.2.4 If the unpaid balance of the Contract Sum exceeds costs of finishing the Work, including compensation for the Architect's services and expenses made necessary thereby, and other damages incurred by the Owner and not expressly waived, such excess shall be paid to the Contractor. If such costs and damages exceed the unpaid balance, the Contractor shall pay the difference to the Owner. The amount to be paid to the Contractor or Owner, as the case may be, shall be certified by the Initial Decision Maker, upon application, and this obligation for payment shall survive termination of the Contract.

§ 14.2.5 Provisions of law pursuant to the Code of Iowa, Act to Provide for Termination of Contracts for Construction of Public Improvements when construction work or work thereon is stopped because of a National Emergency, shall apply to and become a part of this contract and shall be binding upon all parties hereto, including Subcontractors and Sureties upon any Bond given or filed in connection herewith.

§ 14.3 Suspension by the Owner for Convenience

§ 14.3.1 The Owner may, without cause, order the Contractor in writing to suspend, delay or interrupt the Work, in whole or in part for such period of time as the Owner may determine.

§ 14.3.2 The Contract Sum and Contract Time shall be adjusted for increases in the cost and time caused by suspension, delay, or interruption under Section 14.3.1. Adjustment of the Contract Sum shall include profit. No adjustment shall be made to the extent

- **.1** that performance is, was, or would have been, so suspended, delayed, or interrupted, by another cause for which the Contractor is responsible; or
- **.2** that an equitable adjustment is made or denied under another provision of the Contract.

§ 14.4 Termination by the Owner for Convenience

§ 14.4.1 The Owner may, at any time, terminate the Contract for the Owner's convenience and without cause.

§ 14.4.2 Upon receipt of notice from the Owner of such termination for the Owner's convenience, the Contractor shall

- **.1** cease operations as directed by the Owner in the notice;
- **.2** take actions necessary, or that the Owner may direct, for the protection and preservation of the Work; and
- **.3** except for Work directed to be performed prior to the effective date of termination stated in the notice, terminate all existing subcontracts and purchase orders and enter into no further subcontracts and purchase orders.

§ 14.4.3 In case of such termination for the Owner's convenience, the Owner shall pay the Contractor for Work properly executed; costs incurred by reason of the termination, including costs attributable to termination of Subcontracts; and the termination fee, if any, set forth in the Agreement.

ARTICLE 15 CLAIMS AND DISPUTES

§ 15.1 Claims

§ 15.1.1 Definition

A Claim is a demand or assertion by one of the parties seeking, as a matter of right, payment of money, a change in the Contract Time, or other relief with respect to the terms of the Contract. The term "Claim" also includes other disputes and matters in question between the Owner and Contractor arising out of or relating to the Contract. The responsibility to substantiate Claims shall rest with the party making the Claim. This Section 15.1.1 does not require the Owner to file a Claim in order to impose liquidated damages in accordance with the Contract Documents.

§ 15.1.2 Time Limits on Claims

The Owner and Contractor shall commence all Claims and causes of action against the other and arising out of or related to the Contract, whether in contract, tort, breach of warranty or otherwise, in accordance with the requirements of the binding dispute resolution method selected in the Agreement and within the period specified by applicable law, but in any case not more than 10 years after the date of Substantial Completion of the Work. The Owner and Contractor waive all Claims and causes of action not commenced in accordance with this Section 15.1.2.

§ 15.1.3 Notice of Claims

§ 15.1.3.1 Claims by either the Owner or Contractor, where the condition giving rise to the Claim is first discovered prior to expiration of the period for correction of the Work set forth in Section 12.2.2, shall be initiated by notice to the other party and to the Initial Decision Maker with a copy sent to the Architect, if the Architect is not serving as the Initial Decision Maker. Claims by either party under this Section 15.1.3.1 shall be initiated within 21 days after occurrence of the event giving rise to such Claim or within 21 days after the claimant first recognizes the condition giving rise to the Claim, whichever is later.

§ 15.1.3.2 Claims by either the Owner or Contractor, where the condition giving rise to the Claim is first discovered after expiration of the period for correction of the Work set forth in Section 12.2.2, shall be initiated by notice to the other party. In such event, no decision by the Initial Decision Maker is required.

§ 15.1.4 Continuing Contract Performance

§ 15.1.4.1 Pending final resolution of a Claim, except as otherwise agreed in writing or as provided in Section 9.7 and Article 14, the Contractor shall proceed diligently with performance of the Contract and the Owner shall continue to make payments in accordance with the Contract Documents.

§ 15.1.4.2 The Contract Sum and Contract Time shall be adjusted in accordance with the Initial Decision Maker's decision, subject to the right of either party to proceed in accordance with this Article 15. The Architect will issue Certificates for Payment in accordance with the decision of the Initial Decision Maker.

§ 15.1.5 Claims for Additional Cost

If the Contractor wishes to make a Claim for an increase in the Contract Sum, notice as provided in Section 15.1.3 shall be given before proceeding to execute the portion of the Work that is the subject of the Claim. Prior notice is not required for Claims relating to an emergency endangering life or property arising under Section 10.4.

§ 15.1.6 Claims for Additional Time

§ 15.1.6.1 If the Contractor wishes to make a Claim for an increase in the Contract Time, notice as provided in Section 15.1.3 shall be given. The Contractor's Claim shall include an estimate of cost and of probable effect of delay on progress of the Work. In the case of a continuing delay, only one Claim is necessary.

§ 15.1.6.2 If adverse weather conditions are the basis for a Claim for additional time, such Claim shall be documented by data substantiating that weather conditions were abnormal for the period of time, could not have been reasonably anticipated, and had an adverse effect on the scheduled construction.

§ 15.1.6.3 Claims for increase in the Contract Time shall set forth in detail the circumstances that form the basis for the Claim, the date upon which each cause of delay began to affect the progress of the Work, the date upon which each cause of delay ceased to affect the progress of the Work, and the number of days' increase in the Contract Time claimed as a consequence of each such cause of delay. The Contractor shall provide such supporting documentation as the Owner may require including, where appropriate, a revised construction schedule indicating all the activities affected by the circumstances forming the basis of the Claim.

§ 15.1.6.4 The Contractor shall not be entitled to a separate increase in the Contract Time for each one of the number of causes of delay which may have concurrent or interrelated effects on the progress of the Work, or for concurrent delays due to the fault of the Contractor.

§ 15.1.7 Waiver of Claims for Consequential Damages

The Contractor and Owner waive Claims against each other for consequential damages arising out of or relating to this Contract. This mutual waiver includes

- **.1** damages incurred by the Owner for rental expenses, for losses of use, income, profit, financing, business and reputation, and for loss of management or employee productivity or of the services of such persons; and
- **.2** damages incurred by the Contractor for principal office expenses including the compensation of personnel stationed there, for losses of financing, business and reputation, and for loss of profit, except anticipated profit arising directly from the Work.

This mutual waiver is applicable, without limitation, to all consequential damages due to either party's termination in accordance with Article 14. Nothing contained in this Section 15.1.7 shall be deemed to preclude assessment of liquidated damages, when applicable, in accordance with the requirements of the Contract Documents.

§ 15.2 Initial Decision

§ 15.2.1 Claims, excluding those where the condition giving rise to the Claim is first discovered after expiration of the period for correction of the Work set forth in Section 12.2.2 or arising under Sections 10.3, 10.4, and 11.5, shall be referred to the Initial Decision Maker for initial decision. The Architect will serve as the Initial Decision Maker, unless otherwise indicated in the Agreement. Except for those Claims excluded by this Section 15.2.1, an initial decision shall be required as a condition precedent to mediation of any Claim. If an initial decision has not been rendered within 30 days after the Claim has been referred to the Initial Decision Maker, the party asserting the Claim may demand mediation and binding dispute resolution without a decision having been rendered. Unless the Initial Decision Maker and all affected parties agree, the Initial Decision Maker will not decide disputes between the Contractor and persons or entities other than the Owner.

§ 15.2.2 The Initial Decision Maker will review Claims and within ten days of the receipt of a Claim take one or more of the following actions: (1) request additional supporting data from the claimant or a response with supporting data from the other party, (2) reject the Claim in whole or in part, (3) approve the Claim, (4) suggest a compromise, or (5) advise the parties that the Initial Decision Maker is unable to resolve the Claim if the Initial Decision Maker lacks

sufficient information to evaluate the merits of the Claim or if the Initial Decision Maker concludes that, in the Initial Decision Maker's sole discretion, it would be inappropriate for the Initial Decision Maker to resolve the Claim.

§ 15.2.3 In evaluating Claims, the Initial Decision Maker may, but shall not be obligated to, consult with or seek information from either party or from persons with special knowledge or expertise who may assist the Initial Decision Maker in rendering a decision. The Initial Decision Maker may request the Owner to authorize retention of such persons at the Owner's expense.

§ 15.2.4 If the Initial Decision Maker requests a party to provide a response to a Claim or to furnish additional supporting data, such party shall respond, within ten days after receipt of the request, and shall either (1) provide a response on the requested supporting data, (2) advise the Initial Decision Maker when the response or supporting data will be furnished, or (3) advise the Initial Decision Maker that no supporting data will be furnished. Upon receipt of the response or supporting data, if any, the Initial Decision Maker will either reject or approve the Claim in whole or in part.

§ 15.2.5 The Initial Decision Maker will render an initial decision approving or rejecting the Claim, or indicating that the Initial Decision Maker is unable to resolve the Claim. This initial decision shall (1) be in writing; (2) state the reasons therefor; and (3) notify the parties and the Architect, if the Architect is not serving as the Initial Decision Maker, of any change in the Contract Sum or Contract Time or both. The initial decision shall be final and binding on the parties but subject to mediation and, if the parties fail to resolve their dispute through mediation, to binding dispute resolution.

§ 15.2.6 Either party may file for mediation of an initial decision at any time, subject to the terms of Section 15.2.6.1.

§ 15.2.6.1 Either party may, within 30 days from the date of receipt of an initial decision, demand in writing that the other party file for mediation. If such a demand is made and the party receiving the demand fails to file for mediation within 30 days after receipt thereof, then both parties waive their rights to mediate or pursue binding dispute resolution proceedings with respect to the initial decision.

§ 15.2.7 In the event of a Claim against the Contractor, the Owner may, but is not obligated to, notify the surety, if any, of the nature and amount of the Claim. If the Claim relates to a possibility of a Contractor's default, the Owner may, but is not obligated to, notify the surety and request the surety's assistance in resolving the controversy.

§ 15.2.8 If a Claim relates to or is the subject of a mechanic's lien, the party asserting such Claim may proceed in accordance with applicable law to comply with the lien notice or filing deadlines.

§ 15.3 Mediation

§ 15.3.1 Claims, disputes, or other matters in controversy arising out of or related to the Contract, except those waived as provided for in Sections 9.10.4, 9.10.5, and 15.1.7, shall be subject to mediation as a condition precedent to binding dispute resolution.

§ 15.3.2 The parties shall endeavor to resolve their Claims by mediation which, unless the parties mutually agree otherwise, shall be administered by the American Arbitration Association in accordance with its Construction Industry Mediation Procedures in effect on the date of the Agreement. A request for mediation shall be made in writing, delivered to the other party to the Contract, and filed with the person or entity administering the mediation. The request may be made concurrently with the filing of binding dispute resolution proceedings but, in such event, mediation shall proceed in advance of binding dispute resolution proceedings, which shall be stayed pending mediation for a period of 60 days from the date of filing, unless stayed for a longer period by agreement of the parties or court order. If an arbitration is stayed pursuant to this Section 15.3.2, the parties may nonetheless proceed to the selection of the arbitrator(s) and agree upon a schedule for later proceedings.

§ 15.3.3 Either party may, within 30 days from the date that mediation has been concluded without resolution of the dispute or 60 days after mediation has been demanded without resolution of the dispute, demand in writing that the other party file for binding dispute resolution. If such a demand is made and the party receiving the demand fails to

file for binding dispute resolution within 60 days after receipt thereof, then both parties waive their rights to binding dispute resolution proceedings with respect to the initial decision.

§ 15.3.4 The parties shall share the mediator's fee and any filing fees equally. The mediation shall be held in the place where the Project is located, unless another location is mutually agreed upon. Agreements reached in mediation shall be enforceable as settlement agreements in any court having jurisdiction thereof.

~~**§ 15.4 Arbitration**~~

~~**§ 15.4.1** If the parties have selected arbitration as the method for binding dispute resolution in the Agreement, any Claim subject to, but not resolved by, mediation shall be subject to arbitration which, unless the parties mutually agree otherwise, shall be administered by the American Arbitration Association in accordance with its Construction Industry Arbitration Rules in effect on the date of the Agreement. The Arbitration shall be conducted in the place where the Project is located, unless another location is mutually agreed upon. A demand for arbitration shall be made in writing, delivered to the other party to the Contract, and filed with the person or entity administering the arbitration. The party filing a notice of demand for arbitration must assert in the demand all Claims then known to that party on which arbitration is permitted to be demanded.~~

~~**§ 15.4.1.1** A demand for arbitration shall be made no earlier than concurrently with the filing of a request for mediation, but in no event shall it be made after the date when the institution of legal or equitable proceedings based on the Claim would be barred by the applicable statute of limitations. For statute of limitations purposes, receipt of a written demand for arbitration by the person or entity administering the arbitration shall constitute the institution of legal or equitable proceedings based on the Claim.~~

~~**§ 15.4.2** The award rendered by the arbitrator or arbitrators shall be final, and judgment may be entered upon it in accordance with applicable law in any court having jurisdiction thereof.~~

~~**§ 15.4.3** The foregoing agreement to arbitrate and other agreements to arbitrate with an additional person or entity duly consented to by parties to the Agreement, shall be specifically enforceable under applicable law in any court having jurisdiction thereof.~~

~~**§ 15.4.4 Consolidation or Joinder**~~

~~**§ 15.4.4.1** Subject to the rules of the American Arbitration Association or other applicable arbitration rules, either party may consolidate an arbitration conducted under this Agreement with any other arbitration to which it is a party provided that (1) the arbitration agreement governing the other arbitration permits consolidation, (2) the arbitrations to be consolidated substantially involve common questions of law or fact, and (3) the arbitrations employ materially similar procedural rules and methods for selecting arbitrator(s).~~

~~**§ 15.4.4.2** Subject to the rules of the American Arbitration Association or other applicable arbitration rules, either party may include by joinder persons or entities substantially involved in a common question of law or fact whose presence is required if complete relief is to be accorded in arbitration, provided that the party sought to be joined consents in writing to such joinder. Consent to arbitration involving an additional person or entity shall not constitute consent to arbitration of any claim, dispute or other matter in question not described in the written consent.~~

~~**§ 15.4.4.3** The Owner and Contractor grant to any person or entity made a party to an arbitration conducted under this Section 15.4, whether by joinder or consolidation, the same rights of joinder and consolidation as those of the Owner and Contractor under this Agreement.~~

SECTION 00 73 15 – SPECIAL CONDITIONS OF THE CONTRACT

The following provisions are made part of the Contract.

1. Access and Maintenance of Records.

   The contractor must maintain all required records for five years after final payments are made and all other pending matters are closed.

   At any time during normal business hours and as frequently as is deemed necessary, the contractor shall make available to the Iowa Economic Development Authority, the State Auditor, the General Accounting Office, and the Department of Housing and Urban Development, for their examination, all of its records pertaining to all matters covered by this contract and permit these agencies to audit, examine, make excerpts or transcripts from such records, contract, invoices, payrolls, personnel records, conditions of employment, and all other matters covered by this contract.

2. Civil Rights.

   The Contractor must comply with the following laws and regulations:

   - Title VI of the Civil Rights Act of 1964 (P.L. 88-352). *States that no person may be excluded from participation in, denied the benefits of, or subjected to discrimination under any program or activity receiving Federal financial assistance on the basis of race, color, or national origin.*

   - Title VIII of the Civil Rights Act of 1968 (Fair Housing Act), as amended.

   - Federal Executive Order 11063, as amended by Executive Order 12259. *Equal Opportunity Housing*

   - Iowa Civil Rights Act of 1965. *This Act mirrors the Federal Civil Rights Act.*

   - Section 109 of Title I of the Housing and Community Development Act of 1974, as amended (42 U.S.C. 5309). *Provides that no person shall be excluded from participation in, denied the benefits of, or subjected to discrimination on the basis of race, color, national origin, sex, age, or handicap under any program or activity funded in part or in whole under Title I of the Act.*

   - The Age Discrimination Act of 1975, as amended (42 U.S.C. 1601 et seq.) *Provides that no person on the basis of age, be excluded from participation in, be denied the benefits of or be subjected to discrimination under any program or activity receiving Federal financial assistance.*

   - Section 504 of the Rehabilitation Act of 1973, as amended (P.L. 93-112, 29 U.S.C. 794). *Provides that no otherwise qualified individual shall solely by reason of his/her handicap be excluded from participation in, be denied the benefits of, or be discriminated against under any program or activity receiving Federal financial assistance.*

   - Americans with Disabilities Act (P.L. 101-336, 42 U.S.C. 12101-12213) *Provides comprehensive civil rights to individuals with disabilities in the areas of employment, public accommodations, state and local government services, and telecommunications.*

- Section 3 of the Housing and Urban Development Act of 1968, as amended (12 U.S.C. 1701u). *The purpose of section 3 of the Housing and Urban Development Act of 1968 (12 U.S.C. 1701u) (section 3) is to ensure that employment and other economic opportunities generated by certain HUD financial assistance shall, to the greatest extent feasible, and consistent with existing Federal, State and local laws and regulations, be directed to low- and very low-income persons, particularly those who are recipients of government assistance for housing, and to business concerns which provide economic opportunities to low- and very low-income persons.*

3. Termination Clause.

Reference AIA Document A201-2007 Article 14, as amended.

4. Certification regarding government-wide restriction on lobbying.

The Recipient (Contractor) certifies, to the best of his or her knowledge and belief, that:

i. No Federal appropriated funds have been paid or will be paid, by or on behalf of the Recipient, to any person for influencing or attempting to influence an officer or employee of any agency, a Member of Congress, an officer or employee of Congress, or an employee of a Member of Congress in connection with the awarding of any Federal contract, the making of any Federal grant, the making of any Federal loan, the entering into of any cooperative agreement, and the extension, continuation, renewal, amendment, or modification of any Federal contract, grant, loan, or cooperative agreement.

ii. If any funds other than Federal appropriated funds have been paid or will be paid to any person for influencing or attempting to influence an officer or employee of any agency, a Member of Congress, an officer or employee, or an employee of a Member of congress in connection with this Federal contract, grant, loan, or cooperative agreement, the Recipient shall complete and submit Standard Form-LLL, "Disclosure Form to Report Federal Lobbying" in accordance with its instruction.

iii. The Recipient shall require that the language of this certification be included in the award documents for all subawards at all tiers (including subcontracts, subgrants, and contracts under grants, loans, and cooperative agreements) and that all subrecipients shall certify and disclose accordingly.

This certification is a material representation of fact upon which reliance was placed when this transaction was made or entered into. Submission of this certification is a prerequisite for making or entering into this transaction imposed by section 1352, title 31, U.S. Code. Any person who fails to file the required certification shall be subject to a civil penalty of not less than $10,000 and not more than $100,000 for each such failure.

5. Lead-Safe Housing Regulations (as applicable).

24 CFR Part 35 et. al.

Requirements for Notification, Evaluation and Reduction of Lead-Based Paint Hazards in Federally Owned Residential Properties and Housing Receiving Federal Assistance, Final Rule

6. Recycled Materials

The contractor agrees to comply with all the requirements of Code of Iowa chapter 8A.315-317 and Iowa Administrative Code chapter 11-117.6(5) — Recycled Product and Content which states: When appropriate, specifications shall include requirements for the use of recovered materials and products.

The specifications shall not restrict the use of alternative materials, exclude recovered materials, or require performance standards that exclude products containing recovered materials unless the subrecipient seeking the product can document that the use of recovered materials will impede the intended use of the product.

7. Notice of Awarding Agency Requirements and Regulations Pertaining to Reporting

The Contractor must provide information as necessary and as requested by the Iowa Economic Development Authority for the purpose of fulfilling all reporting requirements related to the CDBG program.

8. Executive Orders 11246 and 11375. (For all contracts in excess of $10,000)

During the performance of this contract, the contractor agrees as follows:

1) The Contractor will not discriminate against any employee or applicant for employment because of race, color, religion, sex or national origin. The Contractor will take affirmative action to ensure that applicants are employed, and that employees are treated during employment, without regard to their race, color, religion, sex, or national origin. Such action shall include, but not be limited to the following: employment, upgrading, demotion, transfer, recruitment or recruitment advertising; layoff or termination; rates of pay or other forms of compensation; and selection for training, including apprenticeship. The Contractor agrees to post in conspicuous places, available to employees and applicants for employment, notices to be provided by the contracting officer setting forth the provisions of this nondiscrimination clause.

2) The Contractor will, in all solicitations or advertisement for employees placed by or on behalf of the Contractor, state that all qualified applicants will receive consideration for employment without regard to race, color, religion, sex, or national origin.

3) The Contractor will send to each labor union or representative of workers with which they have a collective bargaining agreement or other Contract or understanding, a notice, to be provided by the agency contracting officer, advising the labor union or workers' representative of the Contractor's commitments under Section 202 of Executive Order No. 11246 of September 24, 1965, and shall post copies of the notice in conspicuous places available to employees and applicants for employment.

4) The Contractor will comply with all provisions of Executive Order No. 11246 of September 24, 1965, and of the rules, regulations, and relevant order of the Secretary of Labor.

5) The Contractor will furnish all information and reports required by Executive Order No. 11246 of September 24, 1965, and by the rules, regulations, and orders of the Secretary of Labor, or pursuant thereto, and will permit access to their books, records, and accounts by the contracting agency and the Secretary of Labor for purposes of investigation to ascertain compliance with such rules, regulations, and orders.

6) In the event of the Contractor's noncompliance with the nondiscrimination clauses of this Contract or with any such rules, regulations or orders, this Contract may be canceled, terminated or suspended in whole or in part and the Contractor may be declared ineligible for further government Contracts in accordance with

procedures authorized in Executive Order No. 11246 of September 24, 1965, or by rule, regulation, or order of the Secretary of Labor, or as otherwise provided by law.

7) The Contractor will include the provision of Paragraphs (1) through (7) in every subcontract or purchase order unless exempted by rules, regulations, or orders of the Secretary of Labor issued pursuant to Section 204 of Executive Order No. 11246 of September 24, 1965, so that such provisions will be binding upon each subcontractor or vendor. The Contractor will take such action with respect to any subcontract or purchase order as the contracting agency may direct as a means of enforcing such provisions including sanctions for noncompliance; provided, however, that in the event the Contractor becomes involved in, or is threatened with, litigation with a subcontractor or vendor as a result of such direction by the contracting agency, the Contractor may request the United States to enter into such litigation to protect the interests of the United States.

9. The Contractor will comply with the following laws and regulations. (For all contracts in excess of $100,000)

1) Section 306 of the Clean Air Acts [42 U.S.C. 1857 (h)].

2) Section 508 of the Clean Water Act [33 U.S.C. 1368].

3) Executive Order 11738. *Providing administration of the Clean Air and Water Acts*.

In accordance with the Clean Air and Water Act, during the performance of this contract, the Contractor agrees as follows:

1) The Contractor will certify that any facility to be utilized in the performance of any nonexempt contract or subcontract is not listed on the List of Violating Facilities issued by the Environmental Protection Agency pursuant to 40 CFR 15.20.

2) The Contractor agrees to comply with all the requirements of Section 114 of the Clean Air Act, as amended, (42 U.S.C. 1857c-8) and Section 308 of the Federal Water Pollution Control Act, as amended (33 U.S.C. 1318) relating to inspection, monitoring, entry, reports, and information, as well as all other requirements specified in said Section 114 and Section 308, and all regulations and guidelines issued thereunder.

3) The Contractor agrees that as a condition for the award of a Contract, prompt notice will be given of any notification received from the Director, Office of Federal Activities, Environmental Protection Agency, indicating that a facility utilized or to be utilized for the Contract is under consideration to be listed on the Excluded Party Listing System

4) The Contractor agrees that it will include or cause to be included the criteria and requirements in Paragraphs (1) through (4) of this section in every nonexempt subcontract and require every subcontractor to take such action as the Government may direct as a means of enforcing such provisions.

10. Federal Labor Standards Provisions. (For all construction contracts in excess of $2,000)

In addition to the preceding provisions, all construction contracts in excess of $2,000 must include the Federal Labor Standards Provisions (verbatim) found in Appendix 2 under Required Contract Provisions. (Housing rehabilitation contracts of less than 8 units are excluded from this requirement.)

Federal Labor Standards Provisions (verbatim) found in Appendix 2, including:

- Davis-Bacon and Related Acts
- Contract Work Hours and Safety Standard Act
- Copeland Anti-kickback Act

11. Section 3 language for Contracts.

A. The work to be performed under this contract is subject to the requirements of section 3 of the Housing and Urban Development Act of 1968, as amended, 12 U.S.C. 1701u (section 3). The purpose of section 3 is to ensure that employment and other economic opportunities generated by HUD assistance or HUD-assisted projects covered by section 3, shall, to the greatest extent feasible, be directed to low- and very low-income persons, particularly persons who are recipients of HUD assistance for housing.

B. The parties to this contract agree to comply with HUD's regulations in 24 CFR part 135, which implement section 3. As evidenced by their execution of this contract, the parties to this contract certify that they are under no contractual or other impediment that would prevent them from complying with the part 135 regulations.

C. The contractor agrees to send to each labor organization or representative of workers with which the contractor has a collective bargaining agreement or other understanding, if any, a notice advising the labor organization or workers' representative of the contractor's commitments under this section 3 clause, and will post copies of the notice in conspicuous places at the work site where both employees and applicants for training and employment positions can see the notice. The notice shall describe the section 3 preference, shall set forth minimum number and job titles subject to hire, availability of apprenticeship and training positions, the qualifications for each; and the name and location of the person(s) taking applications for each of the positions; and the anticipated date the work shall begin.

D. The contractor agrees to include this section 3 clause in every subcontract subject to compliance with regulations in 24 CFR part 135, and agrees to take appropriate action, as provided in an applicable provision of the subcontract or in this section 3 clause, upon a finding that the subcontractor is in violation of the regulations in 24 CFR part 135. The contractor will not subcontract with any subcontractor where the contractor has notice or knowledge that the subcontractor has been found in violation of the regulations in 24 CFR part 135.

E. The contractor will certify that any vacant employment positions, including training positions, that are filled (1) after the contractor is selected but before the contract is executed, and (2) with persons other than those to whom the regulations of 24 CFR part 135 require employment opportunities to be directed, were not filled to circumvent the contractor's obligations under 24 CFR part 135.

F. Noncompliance with HUD's regulations in 24 CFR part 135 may result in sanctions, termination of this contract for default, and debarment or suspension from future HUD assisted contracts.

G. With respect to work performed in connection with section 3 covered Indian housing assistance, section 7(b) of the Indian Self-Determination and Education Assistance Act (25 U.S.C. 450e) also applies to the work to be performed under this contract. Section 7(b) requires that to the greatest extent feasible (i)

preference and opportunities for training and employment shall be given to Indians, and (ii) preference in the award of contracts and subcontracts shall be given to Indian organizations and Indian-owned Economic Enterprises. Parties to this contract that are subject to the provisions of section 3 and section 7(b) agree to comply with section 3 to the maximum extent feasible, but not in derogation of compliance with section 7(b).

END OF SECTION 00 73 15

https://sam.gov/wage-determination/IA20230049/1

General Decision Number: IA20230049 01/13/2023

Superseded General Decision Number: IA20220049

State: Iowa

Construction Type: Building

County: Marshall County in Iowa.

BUILDING CONSTRUCTION PROJECTS (does not include single family homes or apartments up to and including 4 stories).

Note: Contracts subject to the Davis-Bacon Act are generally required to pay at least the applicable minimum wage rate required under Executive Order 14026 or Executive Order 13658. Please note that these Executive Orders apply to covered contracts entered into by the federal government that are subject to the Davis-Bacon Act itself, but do not apply to contracts subject only to the Davis-Bacon Related Acts, including those set forth at 29 CFR 5.1(a)(2)-(60).

If the contract is entered into on or after January 30, 2022, or the contract is renewed or extended (e.g., an option is exercised) on or after January 30, 2022:	. Executive Order 14026 generally applies to the contract. . The contractor must pay all covered workers at least $16.20 per hour (or the applicable wage rate listed on this wage determination, if it is higher) for all hours spent performing on the contract in 2023.
If the contract was awarded on or between January 1, 2015 and January 29, 2022, and the contract is not renewed or extended on or after January 30, 2022:	. Executive Order 13658 generally applies to the contract. . The contractor must pay all covered workers at least $12.15 per hour (or the applicable wage rate listed on this wage determination, if it is higher) for all hours spent performing on that contract in 2023.

The applicable Executive Order minimum wage rate will be adjusted annually. If this contract is covered by one of the Executive Orders and a classification considered necessary for performance of work on the contract does not appear on this wage determination, the contractor must still submit a conformance request.

Additional information on contractor requirements and worker protections under the Executive Orders is available at http://www.dol.gov/whd/govcontracts.

Modification Number	Publication Date
0	01/06/2023
1	01/13/2023

BOIL0083-009 01/01/2021

	Rates	Fringes
BOILERMAKER	$ 41.52	30.36

CARP0004-002 05/01/2022

	Rates	Fringes
CARPENTER (Form Work Only)	$ 31.75	26.61

---

* ELEV0033-002 01/01/2023

	Rates	Fringes
ELEVATOR MECHANIC	$ 51.68	37.335+a+b

FOOTNOTES:
A. Employer contributes 8% of regular basic hourly rate as vacation pay credit for employees with more than 5 years of service, and 6% for employees with less than 5 years of service.
B. PAID HOLIDAYS: New Year's Day; Memorial Day; Independence Day; Labor Day; Veteran's Day; Thanksgiving Day; Day after Thanksgiving; & Christmas Day.

ENGI0150-010 06/01/2022

	Rates	Fringes
POWER EQUIPMENT OPERATOR (Forklift)	$ 37.50	36.90

Class 4

ENGI0150-037 06/01/2022

	Rates	Fringes
POWER EQUIPMENT OPERATOR (Crane)	$ 38.50	36.90

Class 2

IRON0111-002 07/01/2022

	Rates	Fringes
IRONWORKER (Reinforcing)	$ 35.00	29.31

IRON0577-001 06/01/2022

	Rates	Fringes
IRONWORKER (Ornamental)	$ 28.80	25.05

LABO0177-002 05/01/2016

	Rates	Fringes
LABORER (Mason Tender - Brick)	$ 24.07	10.98

PAIN0246-001 05/01/2022

	Rates	Fringes
PAINTER (Brush and Roller)	$ 28.84	14.36

```
---------------------------------------------------------------
PAIN0676-001 05/01/2021
                                  Rates          Fringes
DRYWALL FINISHER/TAPER...........$ 30.19            16.28
---------------------------------------------------------------
SFIA0669-002 01/01/2022
                                  Rates          Fringes
SPRINKLER FITTER (Fire
Sprinklers)......................$ 37.58            24.69
---------------------------------------------------------------
SHEE0045-003 06/01/2020
                                  Rates          Fringes
SHEET METAL WORKER (Includes
HVAC Duct Installation)..........$ 35.60            20.97
---------------------------------------------------------------
* UAVG-IA-0001 01/01/2019
                                  Rates          Fringes
MILLWRIGHT.......................$ 28.20            23.74
---------------------------------------------------------------
* UAVG-IA-0002 01/01/2019
                                  Rates          Fringes
PIPEFITTER, Includes HVAC
Pipe and Unit Installation.......$ 34.46            19.28
---------------------------------------------------------------
*  SUIA2016-022 07/19/2016
                                  Rates          Fringes
BRICKLAYER.......................$ 25.93             9.70

CARPENTER, Includes
Acoustical Ceiling
Installation, and Drywall
Hanging (Excludes Form Work).....$ 23.30            12.28

CEMENT MASON/CONCRETE FINISHER...$ 21.12            11.07

ELECTRICIAN, Includes
HVAC/Temperature Controls
Installation.....................$ 26.11             6.56

INSULATOR: Mechanical (Duct,
Pipe and Mechanical System
Insulation)......................$ 19.04             7.32

IRONWORKER, STRUCTURAL...........$ 25.29            15.89

LABORER:  Common or General......$ 17.25             6.93

LABORER:  Landscape..............$ 14.81 **          0.00

LABORER:  Pipelayer..............$ 18.00             2.70

OPERATOR:
Backhoe/Excavator/Trackhoe.......$ 27.31            15.35

OPERATOR:  Bobcat/Skid
Steer/Skid Loader................$ 27.55            22.85
```

OPERATOR: Bulldozer.....$ 22.31 8.36

OPERATOR: Loader.....$ 25.80 17.19

PLUMBER.....$ 31.85 15.12

ROOFER.....$ 14.00 ** 3.91

WELDERS - Receive rate prescribed for craft performing operation to which welding is incidental.

==========

** Workers in this classification may be entitled to a higher minimum wage under Executive Order 14026 ($16.20) or 13658 ($12.15). Please see the Note at the top of the wage determination for more information.

Note: Executive Order (EO) 13706, Establishing Paid Sick Leave for Federal Contractors applies to all contracts subject to the Davis-Bacon Act for which the contract is awarded (and any solicitation was issued) on or after January 1, 2017. If this contract is covered by the EO, the contractor must provide employees with 1 hour of paid sick leave for every 30 hours they work, up to 56 hours of paid sick leave each year. Employees must be permitted to use paid sick leave for their own illness, injury or other health-related needs, including preventive care; to assist a family member (or person who is like family to the employee) who is ill, injured, or has other health-related needs, including preventive care; or for reasons resulting from, or to assist a family member (or person who is like family to the employee) who is a victim of, domestic violence, sexual assault, or stalking. Additional information on contractor requirements and worker protections under the EO is available at https://www.dol.gov/agencies/whd/government-contracts.

Unlisted classifications needed for work not included within the scope of the classifications listed may be added after award only as provided in the labor standards contract clauses (29CFR 5.5 (a) (1) (ii)).

The body of each wage determination lists the classification and wage rates that have been found to be prevailing for the cited type(s) of construction in the area covered by the wage determination. The classifications are listed in alphabetical order of ""identifiers"" that indicate whether the particular rate is a union rate (current union negotiated rate for local), a survey rate (weighted average rate) or a union average rate (weighted union average rate).

Union Rate Identifiers

A four letter classification abbreviation identifier enclosed in dotted lines beginning with characters other than ""SU"" or ""UAVG"" denotes that the union classification and rate were prevailing for that classification in the survey. Example: PLUM0198-005 07/01/2014. PLUM is an abbreviation identifier of the union which prevailed in the survey for this classification, which in this example would be Plumbers. 0198 indicates the local union number or

district council number where applicable, i.e., Plumbers Local 0198. The next number, 005 in the example, is an internal number used in processing the wage determination. 07/01/2014 is the effective date of the most current negotiated rate, which in this example is July 1, 2014.

Union prevailing wage rates are updated to reflect all rate changes in the collective bargaining agreement (CBA) governing this classification and rate.

Survey Rate Identifiers

Classifications listed under the ""SU"" identifier indicate that no one rate prevailed for this classification in the survey and the published rate is derived by computing a weighted average rate based on all the rates reported in the survey for that classification. As this weighted average rate includes all rates reported in the survey, it may include both union and non-union rates. Example: SULA2012-007 5/13/2014. SU indicates the rates are survey rates based on a weighted average calculation of rates and are not majority rates. LA indicates the State of Louisiana. 2012 is the year of survey on which these classifications and rates are based. The next number, 007 in the example, is an internal number used in producing the wage determination. 5/13/2014 indicates the survey completion date for the classifications and rates under that identifier.

Survey wage rates are not updated and remain in effect until a new survey is conducted.

Union Average Rate Identifiers

Classification(s) listed under the UAVG identifier indicate that no single majority rate prevailed for those classifications; however, 100% of the data reported for the classifications was union data. EXAMPLE: UAVG-OH-0010 08/29/2014. UAVG indicates that the rate is a weighted union average rate. OH indicates the state. The next number, 0010 in the example, is an internal number used in producing the wage determination. 08/29/2014 indicates the survey completion date for the classifications and rates under that identifier.

A UAVG rate will be updated once a year, usually in January of each year, to reflect a weighted average of the current negotiated/CBA rate of the union locals from which the rate is based.

WAGE DETERMINATION APPEALS PROCESS

1.) Has there been an initial decision in the matter? This can be:

* an existing published wage determination
* a survey underlying a wage determination
* a Wage and Hour Division letter setting forth a position on a wage determination matter
* a conformance (additional classification and rate) ruling

On survey related matters, initial contact, including requests for summaries of surveys, should be with the Wage and Hour National Office because National Office has responsibility for the Davis-Bacon survey program. If the response

from this initial contact is not satisfactory, then the process described in 2.) and 3.) should be followed.

With regard to any other matter not yet ripe for the formal process described here, initial contact should be with the Branch of Construction Wage Determinations. Write to:

Branch of Construction Wage Determinations
Wage and Hour Division
U.S. Department of Labor
200 Constitution Avenue, N.W.
Washington, DC 20210

2.) If the answer to the question in 1.) is yes, then an interested party (those affected by the action) can request review and reconsideration from the Wage and Hour Administrator (See 29 CFR Part 1.8 and 29 CFR Part 7). Write to:

Wage and Hour Administrator
U.S. Department of Labor
200 Constitution Avenue, N.W.
Washington, DC 20210

The request should be accompanied by a full statement of the interested party's position and by any information (wage payment data, project description, area practice material, etc.) that the requestor considers relevant to the issue.

3.) If the decision of the Administrator is not favorable, an interested party may appeal directly to the Administrative Review Board (formerly the Wage Appeals Board). Write to:

Administrative Review Board
U.S. Department of Labor
200 Constitution Avenue, N.W.
Washington, DC 20210

4.) All decisions by the Administrative Review Board are final.

==========

END OF GENERAL DECISION"

EMPLOYEE RIGHTS

UNDER THE DAVIS-BACON ACT

FOR LABORERS AND MECHANICS EMPLOYED ON FEDERAL OR FEDERALLY ASSISTED CONSTRUCTION PROJECTS

PREVAILING WAGES

You must be paid not less than the wage rate listed in the Davis-Bacon Wage Decision posted with this Notice for the work you perform.

OVERTIME

You must be paid not less than one and one-half times your basic rate of pay for all hours worked over 40 in a work week. There are few exceptions.

ENFORCEMENT

Contract payments can be withheld to ensure workers receive wages and overtime pay due, and liquidated damages may apply if overtime pay requirements are not met. Davis-Bacon contract clauses allow contract termination and debarment of contractors from future federal contracts for up to three years. A contractor who falsifies certified payroll records or induces wage kickbacks may be subject to civil or criminal prosecution, fines and/or imprisonment.

APPRENTICES

Apprentice rates apply only to apprentices properly registered under approved Federal or State apprenticeship programs.

PROPER PAY

If you do not receive proper pay, or require further information on the applicable wages, contact the Contracting Officer listed below:

or contact the U.S. Department of Labor's Wage and Hour Division.

WHD WAGE AND HOUR DIVISION
UNITED STATES DEPARTMENT OF LABOR

1-866-487-9243
TTY: 1-877-889-5627
www.dol.gov/whd

WH1321 REV 10/17

OSHA®
Occupational Safety and Health Administration
U.S. Department of Labor

Job Safety and Health
IT'S THE LAW!

All workers have the right to:

- A safe workplace.
- Raise a safety or health concern with your employer or OSHA, or report a work-related injury or illness, without being retaliated against.
- Receive information and training on job hazards, including all hazardous substances in your workplace.
- Request a confidential OSHA inspection of your workplace if you believe there are unsafe or unhealthy conditions. You have the right to have a representative contact OSHA on your behalf.
- Participate (or have your representative participate) in an OSHA inspection and speak in private to the inspector.
- File a complaint with OSHA within 30 days (by phone, online or by mail) if you have been retaliated against for using your rights.
- See any OSHA citations issued to your employer.
- Request copies of your medical records, tests that measure hazards in the workplace, and the workplace injury and illness log.

This poster is available free from OSHA.

Employers must:

- Provide employees a workplace free from recognized hazards. It is illegal to retaliate against an employee for using any of their rights under the law, including raising a health and safety concern with you or with OSHA, or reporting a work-related injury or illness.
- Comply with all applicable OSHA standards.
- Notify OSHA within 8 hours of a workplace fatality or within 24 hours of any work-related inpatient hospitalization, amputation, or loss of an eye.
- Provide required training to all workers in a language and vocabulary they can understand.
- Prominently display this poster in the workplace.
- Post OSHA citations at or near the place of the alleged violations.

On-Site Consultation services are available to small and medium-sized employers, without citation or penalty, through OSHA-supported consultation programs in every state.

Contact OSHA. We can help.

1-800-321-OSHA (6742) • TTY 1-877-889-5627 • www.osha.gov

OSHA 3165-04R 2016

Equal Employment Opportunity is THE LAW

Private Employers, State and Local Governments, Educational Institutions, Employment Agencies and Labor Organizations

Applicants to and employees of most private employers, state and local governments, educational institutions, employment agencies and labor organizations are protected under Federal law from discrimination on the following bases:

RACE, COLOR, RELIGION, SEX, NATIONAL ORIGIN: Title VII of the Civil Rights Act of 1964, as amended, protects applicants and employees from discrimination in hiring, promotion, discharge, pay, fringe benefits, job training, classification, referral, and other aspects of employment, on the basis of race, color, religion, sex (including pregnancy), or national origin. Religious discrimination includes failing to reasonably accommodate an employee's religious practices where the accommodation does not impose undue hardship.

DISABILITY: Title I and Title V of the Americans with Disabilities Act of 1990, as amended, protect qualified individuals from discrimination on the basis of disability in hiring, promotion, discharge, pay, fringe benefits, job training, classification, referral, and other aspects of employment. Disability discrimination includes not making reasonable accommodation to the known physical or mental limitations of an otherwise qualified individual with a disability who is an applicant or employee, barring undue hardship.

AGE: The Age Discrimination in Employment Act of 1967, as amended, protects applicants and employees 40 years of age or older from discrimination based on age in hiring, promotion, discharge, pay, fringe benefits, job training, classification, referral, and other aspects of employment.

SEX (WAGES): In addition to sex discrimination prohibited by Title VII of the Civil Rights Act, as amended, the Equal Pay Act of 1963, as amended, prohibits sex discrimination in the payment of wages to women and men performing substantially equal work, in jobs that require equal skill, effort, and responsibility, under similar working conditions, in the same establishment.

GENETICS: Title II of the Genetic Information Nondiscrimination Act of 2008 protects applicants and employees from discrimination based on genetic information in hiring, promotion, discharge, pay, fringe benefits, job training, classification, referral, and other aspects of employment. GINA also restricts employers' acquisition of genetic information and strictly limits disclosure of genetic information. Genetic information includes information about genetic tests of applicants, employees, or their family members; the manifestation of diseases or disorders in family members (family medical history); and requests for or receipt of genetic services by applicants, employees, or their family members.

RETALIATION: All of these Federal laws prohibit covered entities from retaliating against a person who files a charge of discrimination, participates in a discrimination proceeding, or otherwise opposes an unlawful employment practice.

WHAT TO DO IF YOU BELIEVE DISCRIMINATION HAS OCCURRED: There are strict time limits for filing charges of employment discrimination. To preserve the ability of EEOC to act on your behalf and to protect your right to file a private lawsuit, should you ultimately need to, you should contact EEOC promptly when discrimination is suspected: The U.S. Equal Employment Opportunity Commission (EEOC), 1-800-669-4000 (toll-free) or 1-800-669-6820 (toll-free TTY number for individuals with hearing impairments). EEOC field office information is available at www.eeoc.gov or in most telephone directories in the U.S. Government or Federal Government section. Additional information about EEOC, including information about charge filing, is available at www.eeoc.gov.

Employers Holding Federal Contracts or Subcontracts

Applicants to and employees of companies with a Federal government contract or subcontract are protected under Federal law from discrimination on the following bases:

RACE, COLOR, RELIGION, SEX, NATIONAL ORIGIN: Executive Order 11246, as amended, prohibits job discrimination on the basis of race, color, religion, sex or national origin, and requires affirmative action to ensure equality of opportunity in all aspects of employment.

INDIVIDUALS WITH DISABILITIES: Section 503 of the Rehabilitation Act of 1973, as amended, protects qualified individuals from discrimination on the basis of disability in hiring, promotion, discharge, pay, fringe benefits, job training, classification, referral, and other aspects of employment. Disability discrimination includes not making reasonable accommodation to the known physical or mental limitations of an otherwise qualified individual with a disability who is an applicant or employee, barring undue hardship. Section 503 also requires that Federal contractors take affirmative action to employ and advance in employment qualified individuals with disabilities at all levels of employment, including the executive level.

DISABLED, RECENTLY SEPARATED, OTHER PROTECTED, AND ARMED FORCES SERVICE MEDAL VETERANS: The Vietnam Era Veterans' Readjustment Assistance Act of 1974, as amended, 38 U.S.C. 4212, prohibits job discrimination and requires affirmative action to employ and advance in employment disabled veterans, recently separated veterans (within three years of discharge or release from active duty), other protected veterans (veterans who served during a war or in a campaign or expedition for which a campaign badge has been authorized), and Armed Forces service medal veterans (veterans who, while on active duty, participated in a U.S. military operation for which an Armed Forces service medal was awarded).

RETALIATION: Retaliation is prohibited against a person who files a complaint of discrimination, participates in an OFCCP proceeding, or otherwise opposes discrimination under these Federal laws.

Any person who believes a contractor has violated its nondiscrimination or affirmative action obligations under the authorities above should contact immediately: The Office of Federal Contract Compliance Programs (OFCCP), U.S. Department of Labor, 200 Constitution Avenue, N.W., Washington, D.C. 20210, 1-800-397-6251 (toll-free) or (202) 693-1337 (TTY). OFCCP may also be contacted by e-mail at OFCCP-Public@dol.gov, or by calling an OFCCP regional or district office, listed in most telephone directories under U.S. Government, Department of Labor.

Programs or Activities Receiving Federal Financial Assistance

RACE, COLOR, NATIONAL ORIGIN, SEX INDIVIDUALS WITH DISABILITIES: In addition to the protections of Title VII of the Civil Rights Act of 1964, as amended, prohibits employment amended, Title VI of the Civil Rights Act of 1964, as amended, prohibits discrimination on the basis of race, color or national origin in programs or Federal financial assistance. Employment discrimination is covered by Title VI if the primary objective of the financial assistance is provision of employment, or where employment discrimination causes or may cause discrimination in providing services under such programs. Title IX of the Education Amendments of 1972 prohibits employment discrimination on the basis of sex in educational programs or activities which receive Federal financial assistance.

INDIVIDUAL WITH DISABILITIES: Section 504 of the Rehabilitation Act of 1973, as amended, prohibits employment discrimination on the basis of disability in any program or activity which receives Federal financial assistance. Discrimination is prohibited in all aspects employment against persons with disabilities who, with or without reasonable accommodation, can perform the essential functions of the job.

If you believe you have been discriminated against in a program of any institution which receives Federal financial assistance, you should immediately contact the Federal agency providing such assistance.

EEOC 9/02 and OFCCP 8/08 Versions Useable With 11/09 Supplement EEOC-P/E-1 (Revised 11/09)

U. S. Department of Housing and Urban Development

EQUAL HOUSING
OPPORTUNITY

We Do Business in Accordance With the Federal Fair Housing Law

(The Fair Housing Amendments Act of 1988)

It is Illegal to Discriminate Against Any Person Because of Race, Color, Religion, Sex, Handicap, Familial Status, or National Origin

In the sale or rental of housing or residential lots

In advertising the sale or rental of housing

In the financing of housing

In the provision of real estate brokerage services

In the appraisal of housing

Blockbusting is also illegal

Anyone who feels he or she has been discriminated against may file a complaint of housing discrimination:
1-800-669-9777 (Toll Free)
1-800-927-9275 (TTY)
www.hud.gov/fairhousing

U.S. Department of Housing and Urban Development
Assistant Secretary for Fair Housing and Equal Opportunity
Washington, D.C. 20410

Previous editions are obsolete

form HUD-928.1 (8/2011)

Applicability

The Project or Program to which the construction work covered by this contract pertains is being assisted by the United States of America and the following Federal Labor Standards Provisions are included in this Contract pursuant to the provisions applicable to such Federal assistance.

A. 1. (i) Minimum Wages. All laborers and mechanics employed or working upon the site of the work, will be paid unconditionally and not less often than once a week, and without subsequent deduction or rebate on any account (except such payroll deductions as are permitted by regulations issued by the Secretary of Labor under the Copeland Act (29 CFR Part 3), the full amount of wages and bona fide fringe benefits (or cash equivalents thereof) due at time of payment computed at rates not less than those contained in the wage determination of the Secretary of Labor which is attached hereto and made a part hereof, regardless of any contractual relationship which may be alleged to exist between the contractor and such laborers and mechanics. Contributions made or costs reasonably anticipated for bona fide fringe benefits under Section I(b)(2) of the Davis-Bacon Act on behalf of laborers or mechanics are considered wages paid to such laborers or mechanics, subject to the provisions of 29 CFR 5.5(a)(1)(iv); also, regular contributions made or costs incurred for more than a weekly period (but not less often than quarterly) under plans, funds, or programs, which cover the particular weekly period, are deemed to be constructively made or incurred during such weekly period.

Such laborers and mechanics shall be paid the appropriate wage rate and fringe benefits on the wage determination for the classification of work actually performed, without regard to skill, except as provided in 29 CFR 5.5(a)(4). Laborers or mechanics performing work in more than one classification may be compensated at the rate specified for each classification for the time actually worked therein: Provided, That the employer's payroll records accurately set forth the time spent in each classification in which work is performed. The wage determination (including any additional classification and wage rates conformed under 29 CFR 5.5(a)(1)(ii) and the Davis-Bacon poster (WH-1321) shall be posted at all times by the contractor and its subcontractors at the site of the work in a prominent and accessible, place where it can be easily seen by the workers.

(ii) (a) Any class of laborers or mechanics which is not listed in the wage determination and which is to be employed under the contract shall be classified in conformance with the wage determination. HUD shall approve an additional classification and wage rate and fringe benefits therefor only when the following criteria have been met:

(1) The work to be performed by the classification requested is not performed by a classification in the wage determination; and

(2) The classification is utilized in the area by the construction industry; and

(3) The proposed wage rate, including any bona fide fringe benefits, bears a reasonable relationship to the wage rates contained in the wage determination.

(b) If the contractor and the laborers and mechanics to be employed in the classification (if known), or their representatives, and HUD or its designee agree on the classification and wage rate (including the amount designated for fringe benefits where appropriate), a report of the action taken shall be sent by HUD or its designee to the Administrator of the Wage and Hour Division, Employment Standards Administration, U.S. Department of Labor, Washington, D.C. 20210. The Administrator, or an authorized representative, will approve, modify, or disapprove every additional classification action within 30 days of receipt and so advise HUD or its designee or will notify HUD or its designee within the 30-day period that additional time is necessary. (Approved by the Office of Management and Budget under OMB control number 1215-0140.)

(c) In the event the contractor, the laborers or mechanics to be employed in the classification or their representatives, and HUD or its designee do not agree on the proposed classification and wage rate (including the amount designated for fringe benefits, where appropriate), HUD or its designee shall refer the questions, including the views of all interested parties and the recommendation of HUD or its designee, to the Administrator for determination. The Administrator, or an authorized representative, will issue a determination within 30 days of receipt and so advise HUD or its designee or will notify HUD or its designee within the 30-day period that additional time is necessary. (Approved by the Office of Management and Budget under OMB Control Number 1215-0140.)

(d) The wage rate (including fringe benefits where appropriate) determined pursuant to subparagraphs (1)(ii)(b) or (c) of this paragraph, shall be paid to all workers performing work in the classification under this contract from the first day on which work is performed in the classification.

(iii) Whenever the minimum wage rate prescribed in the contract for a class of laborers or mechanics includes a fringe benefit which is not expressed as an hourly rate, the contractor shall either pay the benefit as stated in the wage determination or shall pay another bona fide fringe benefit or an hourly cash equivalent thereof.

(iv) If the contractor does not make payments to a trustee or other third person, the contractor may consider as part

of the wages of any laborer or mechanic the amount of any costs reasonably anticipated in providing bona fide fringe benefits under a plan or program, Provided, That the Secretary of Labor has found, upon the written request of the contractor, that the applicable standards of the Davis-Bacon Act have been met. The Secretary of Labor may require the contractor to set aside in a separate account assets for the meeting of obligations under the plan or program. (Approved by the Office of Management and Budget under OMB Control Number 1215-0140.)

2. Withholding. HUD or its designee shall upon its own action or upon written request of an authorized representative of the Department of Labor withhold or cause to be withheld from the contractor under this contract or any other Federal contract with the same prime contractor, or any other Federally-assisted contract subject to Davis-Bacon prevailing wage requirements, which is held by the same prime contractor so much of the accrued payments or advances as may be considered necessary to pay laborers and mechanics, including apprentices, trainees and helpers, employed by the contractor or any subcontractor the full amount of wages required by the contract In the event of failure to pay any laborer or mechanic, including any apprentice, trainee or helper, employed or working on the site of the work, all or part of the wages required by the contract, HUD or its designee may, after written notice to the contractor, sponsor, applicant, or owner, take such action as may be necessary to cause the suspension of any further payment, advance, or guarantee of funds until such violations have ceased. HUD or its designee may, after written notice to the contractor, disburse such amounts withheld for and on account of the contractor or subcontractor to the respective employees to whom they are due. The Comptroller General shall make such disbursements in the case of direct Davis-Bacon Act contracts.

3. (i) Payrolls and basic records. Payrolls and basic records relating thereto shall be maintained by the contractor during the course of the work preserved for a period of three years thereafter for all laborers and mechanics working at the site of the work. Such records shall contain the name, address, and social security number of each such worker, his or her correct classification, hourly rates of wages paid (including rates of contributions or costs anticipated for bona fide fringe benefits or cash equivalents thereof of the types described in Section l(b)(2)(B) of the Davis-bacon Act), daily and weekly number of hours worked, deductions made and actual wages paid. Whenever the Secretary of Labor has found under 29 CFR 5.5 (a)(1)(iv) that the wages of any laborer or mechanic include the amount of any costs reasonably anticipated in providing benefits under a plan or program described in Section l(b)(2)(B) of the Davis-Bacon Act, the contractor shall maintain records which show that the commitment to provide such benefits is enforceable, that the plan or program is financially responsible, and that the plan or program has been communicated in writing to the laborers or mechanics affected, and records which show the costs anticipated or the actual cost incurred in providing such benefits. Contractors employing apprentices or trainees under approved programs shall maintain written evidence of the registration of apprenticeship programs and certification of trainee programs, the registration of the apprentices and trainees, and the ratios and wage rates prescribed in the applicable programs. (Approved by the Office of Management and Budget under OMB Control Numbers 1215-0140 and 1215-0017.)

(ii) (a) The contractor shall submit weekly for each week in which any contract work is performed a copy of all payrolls to HUD or its designee if the agency is a party to the contract, but if the agency is not such a party, the contractor will submit the payrolls to the applicant sponsor, or owner, as the case may be, for transmission to HUD or its designee. The payrolls submitted shall set out accurately and completely all of the information required to be maintained under 29 CFR 5.5(a)(3)(i) except that full social security numbers and home addresses shall not be included on weekly transmittals. Instead the payrolls shall only need to include an individually identifying number for each employee (e.g., the last four digits of the employee's social security number). The required weekly payroll information may be submitted in any form desired. Optional Form WH-347 is available for this purpose from the Wage and Hour Division Web site at http://www.dol.gov/esa/whd/forms/wh347instr.htm or its successor site. The prime contractor is responsible for the submission of copies of payrolls by all subcontractors. Contractors and subcontractors shall maintain the full social security number and current address of each covered worker, and shall provide them upon request to HUD or its designee if the agency is a party to the contract, but if the agency is not such a party, the contractor will submit the payrolls to the applicant sponsor, or owner, as the case may be, for transmission to HUD or its designee, the contractor, or the Wage and Hour Division of the Department of Labor for purposes of an investigation or audit of compliance with prevailing wage requirements. It is not a violation of this subparagraph for a prime contractor to require a subcontractor to provide addresses and social security numbers to the prime contractor for its own records, without weekly submission to HUD or its designee. (Approved by the Office of Management and Budget under OMB Control Number 1215-0149.)

(b) Each payroll submitted shall be accompanied by a "Statement of Compliance," signed by the contractor or subcontractor or his or her agent who pays or supervises the payment of the persons employed under the contract and shall certify the following:

(1) That the payroll for the payroll period contains the information required to be provided under 29 CFR 5.5 (a)(3)(ii), the appropriate information is being maintained under 29 CFR 5.5(a)(3)(i), and that such information is correct and complete;

(2) That each laborer or mechanic (including each helper, apprentice, and trainee) employed on the contract during the payroll period has been paid the full weekly wages earned, without rebate, either directly or indirectly, and that no deductions have been made either directly or indirectly from the full wages earned, other than permissible deductions as set forth in 29 CFR Part 3;

(3) That each laborer or mechanic has been paid not less than the applicable wage rates and fringe benefits or cash equivalents for the classification of work performed, as specified in the applicable wage determination incorporated into the contract.

(c) The weekly submission of a properly executed certification set forth on the reverse side of Optional Form WH-347 shall satisfy the requirement for submission of the "Statement of Compliance" required by subparagraph A.3.(ii)(b).

(d) The falsification of any of the above certifications may subject the contractor or subcontractor to civil or criminal prosecution under Section 1001 of Title 18 and Section 231 of Title 31 of the United States Code.

(iii) The contractor or subcontractor shall make the records required under subparagraph A.3.(i) available for inspection, copying, or transcription by authorized representatives of HUD or its designee or the Department of Labor, and shall permit such representatives to interview employees during working hours on the job. If the contractor or subcontractor fails to submit the required records or to make them available, HUD or its designee may, after written notice to the contractor, sponsor, applicant or owner, take such action as may be necessary to cause the suspension of any further payment, advance, or guarantee of funds. Furthermore, failure to submit the required records upon request or to make such records available may be grounds for debarment action pursuant to 29 CFR 5.12.

4. Apprentices and Trainees.

(i) Apprentices. Apprentices will be permitted to work at less than the predetermined rate for the work they performed when they are employed pursuant to and individually registered in a bona fide apprenticeship program registered with the U.S. Department of Labor, Employment and Training Administration, Office of Apprenticeship Training, Employer and Labor Services, or with a State Apprenticeship Agency recognized by the Office, or if a person is employed in his or her first 90 days of probationary employment as an apprentice in such an apprenticeship program, who is not individually registered in the program, but who has been certified by the Office of Apprenticeship Training, Employer and Labor Services or a State Apprenticeship Agency (where appropriate) to be eligible for probationary employment as an apprentice. The allowable ratio of apprentices to journeymen on the job site in any craft classification shall not be greater than the ratio permitted to the contractor as to the entire work force under the registered program. Any worker listed on a payroll at an apprentice wage rate, who is not registered or otherwise employed as stated above, shall be paid not less than the applicable wage rate on the wage determination for the classification of work actually performed. In addition, any apprentice performing work on the job site in excess of the ratio permitted under the registered program shall be paid not less than the applicable wage rate on the wage determination for the work actually performed. Where a contractor is performing construction on a project in a locality other than that in which its program is registered, the ratios and wage rates (expressed in percentages of the journeyman's hourly rate) specified in the contractor's or subcontractor's registered program shall be observed. Every apprentice must be paid at not less than the rate specified in the registered program for the apprentice's level of progress, expressed as a percentage of the journeymen hourly rate specified in the applicable wage determination. Apprentices shall be paid fringe benefits in accordance with the provisions of the apprenticeship program. If the apprenticeship program does not specify fringe benefits, apprentices must be paid the full amount of fringe benefits listed on the wage determination for the applicable classification. If the Administrator determines that a different practice prevails for the applicable apprentice classification, fringes shall be paid in accordance with that determination. In the event the Office of Apprenticeship Training, Employer and Labor Services, or a State Apprenticeship Agency recognized by the Office, withdraws approval of an apprenticeship program, the contractor will no longer be permitted to utilize apprentices at less than the applicable predetermined rate for the work performed until an acceptable program is approved.

(ii) Trainees. Except as provided in 29 CFR 5.16, trainees will not be permitted to work at less than the predetermined rate for the work performed unless they are employed pursuant ',to and individually registered in a program which has received prior approval, evidenced by formal certification by the U.S. Department of Labor, Employment and Training Administration. The ratio of trainees to journeymen on the job site shall not be greater than permitted under the plan approved by the Employment and Training Administration. Every trainee must be paid at not less than the rate specified in the approved program for the trainee's level of progress, expressed as a percentage of the journeyman hourly rate specified in the applicable wage determination. Trainees shall be paid fringe benefits in accordance with the provisions of the trainee program. If the trainee program does not mention fringe benefits, trainees shall be paid the full amount of fringe benefits listed on the wage determination unless the Administrator of the Wage and Hour Division determines that there is an apprenticeship program associated with the corresponding journeyman wage rate on the wage determination which provides for less than full fringe benefits for apprentices. Any employee listed on the payroll at a trainee rate who is not registered and participating in a training plan approved by

the Employment and Training Administration shall be paid not less than the applicable wage rate on the wage determination for the work actually performed. In addition, any trainee performing work on the job site in excess of the ratio permitted under the registered program shall be paid not less than the applicable wage rate on the wage determination for the work actually performed. In the event the Employment and Training Administration withdraws approval of a training program, the contractor will no longer be permitted to utilize trainees at less than the applicable predetermined rate for the work performed until an acceptable program is approved.

(iii) Equal employment opportunity. The utilization of apprentices, trainees and journeymen under 29 CFR Part 5 shall be in conformity with the equal employment opportunity requirements of Executive Order 11246, as amended, and 29 CFR Part 30.

5. Compliance with Copeland Act requirements. The contractor shall comply with the requirements of 29 CFR Part 3 which are incorporated by reference in this contract

6. Subcontracts. The contractor or subcontractor will insert in any subcontracts the clauses contained in subparagraphs 1 through 11 in this paragraph A and such other clauses as HUD or its designee may by appropriate instructions require, and a copy of the applicable prevailing wage decision, and also a clause requiring the subcontractors to include these clauses in any lower tier subcontracts. The prime contractor shall be responsible for the compliance by any subcontractor or lower tier subcontractor with all the contract clauses in this paragraph.

7. Contract termination; debarment. A breach of the contract clauses in 29 CFR 5.5 may be grounds for termination of the contract and for debarment as a contractor and a subcontractor as provided in 29 CFR 5.12.

8. Compliance with Davis-Bacon and Related Act Requirements. All rulings and interpretations of the Davis-Bacon and Related Acts contained in 29 CFR Parts 1, 3, and 5 are herein incorporated by reference in this contract

9. Disputes concerning labor standards. Disputes arising out of the labor standards provisions of this contract shall not be subject to the general disputes clause of this contract. Such disputes shall be resolved in accordance with the procedures of the Department of Labor set forth in 29 CFR Parts 5, 6, and 7. Disputes within the meaning of this clause include disputes between the contractor (or any of its subcontractors) and HUD or its designee, the U.S. Department of Labor, or the employees or their representatives.

10. (i) Certification of Eligibility. By entering into this contract the contractor certifies that neither it (nor he or she) nor any person or firm who has an interest in the contractor's firm is a person or firm ineligible to be awarded Government contracts by virtue of Section 3(a) of the Davis-Bacon Act or 29 CFR 5.12(a)(1) or to be awarded HUD contracts or participate in HUD programs pursuant to 24 CFR Part 24.

(ii) No part of this contract shall be subcontracted to any person or firm ineligible for award of a Government contract by virtue of Section 3(a) of the Davis-Bacon Act or 29 CFR 5.12(a)(1) or to be awarded HUD contracts or participate in HUD programs pursuant to 24 CFR Part 24.

(iii) The penalty for making false statements is prescribed in the U.S. Criminal Code, 18 U.S.C. 1001. Additionally, U.S. Criminal Code, Section 1 01 0, Title 18, U.S.C., "Federal Housing Administration transactions", provides in part: "Whoever, for the purpose of . . . influencing in any way the action of such Administration..... makes, utters or publishes any statement knowing the same to be false..... shall be fined not more than $5,000 or imprisoned not more than two years, or both."

11. Complaints, Proceedings, or Testimony by Employees. No laborer or mechanic to whom the wage, salary, or other labor standards provisions of this Contract are applicable shall be discharged or in any other manner discriminated against by the Contractor or any subcontractor because such employee has filed any complaint or instituted or caused to be instituted any proceeding or has testified or is about to testify in any proceeding under or relating to the labor standards applicable under this Contract to his employer.

B. Contract Work Hours and Safety Standards Act. The provisions of this paragraph B are applicable where the amount of the prime contract exceeds $100,000. As used in this paragraph, the terms "laborers" and "mechanics" include watchmen and guards.

(1) Overtime requirements. No contractor or subcontractor contracting for any part of the contract work which may require or involve the employment of laborers or mechanics shall require or permit any such laborer or mechanic in any workweek in which the individual is employed on such work to work in excess of 40 hours in such workweek unless such laborer or mechanic receives compensation at a rate not less than one and one-half times the basic rate of pay for all hours worked in excess of 40 hours in such workweek.

(2) Violation; liability for unpaid wages; liquidated damages. In the event of any violation of the clause set forth in subparagraph (1) of this paragraph, the contractor and any subcontractor responsible therefor shall be liable for the unpaid wages. In addition, such contractor and subcontractor shall be liable to the United States (in the case of work done under contract for the District of Columbia or a territory, to such District or to such territory), for liquidated damages. Such liquidated damages shall be computed with respect to each individual laborer or mechanic, including watchmen and guards, employed in violation of the clause set forth in subparagraph (1) of this paragraph, in the sum of $10 for each calendar day on which such individual was required or permitted to work in excess of the standard workweek of 40 hours without payment of the overtime wages required by the clause set forth in sub paragraph (1) of this paragraph.

(3) Withholding for unpaid wages and liquidated damages. HUD or its designee shall upon its own action or upon written request of an authorized representative of the Department of Labor withhold or cause to be withheld, from any moneys payable on account of work performed by the contractor or subcontractor under any such contract or any other Federal contract with the same prime contract, or any other Federally-assisted contract subject to the Contract Work Hours and Safety Standards Act which is held by the same prime contractor such sums as may be determined to be necessary to satisfy any liabilities of such contractor or subcontractor for unpaid wages and liquidated damages as provided in the clause set forth in subparagraph (2) of this paragraph.

(4) Subcontracts. The contractor or subcontractor shall insert in any subcontracts the clauses set forth in subparagraph (1) through (4) of this paragraph and also a clause requiring the subcontractors to include these clauses in any lower tier subcontracts. The prime contractor shall be responsible for compliance by any subcontractor or lower tier subcontractor with the clauses set forth in subparagraphs (1) through (4) of this paragraph.

C. Health and Safety. The provisions of this paragraph C are applicable where the amount of the prime contract exceeds $100,000.

(1) No laborer or mechanic shall be required to work in surroundings or under working conditions which are unsanitary, hazardous, or dangerous to his health and safety as determined under construction safety and health standards promulgated by the Secretary of Labor by regulation.

(2) The Contractor shall comply with all regulations issued by the Secretary of Labor pursuant to Title 29 Part 1926 and failure to comply may result in imposition of sanctions pursuant to the Contract Work Hours and Safety Standards Act, (Public Law 91-54, 83 Stat 96). 40 USC 3701 et seq.

(3) The contractor shall include the provisions of this paragraph in every subcontract so that such provisions will be binding on each subcontractor. The contractor shall take such action with respect to any subcontractor as the Secretary of Housing and Urban Development or the Secretary of Labor shall direct as a means of enforcing such provisions.

SECTION 01 10 00 - SUMMARY

PART 1 - GENERAL

1.1 RELATED DOCUMENTS

A. Drawings and general provisions of the Contract, including General and Supplementary Conditions and other Division 01 Specification Sections, apply to this Section.

1.2 SUMMARY

A. Section includes:
   1. Project information.
   2. Work covered by Contract Documents.
   3. Work under separate contracts.
   4. Work sequence.
   5. Access to site.
   6. Work restrictions.
   7. Specification and drawing conventions.

B. Related Section:
   1. Division 01 Section "Temporary Facilities and Controls" for limitations and procedures governing temporary use of building owner's facilities.

1.3 WORK COVERED BY CONTRACT DOCUMENTS

A. The Work of the Project is defined by the Contract Documents and includes, but is not limited to, the following:
   1. Facade Rehabilitation: Historic rehabilitation of existing brick and wood framed buildings. Rehabilitation will consist of exterior restoration and improvements, including but not limited to selective demolition; cleaning, repair, and repointing of stone and brick masonry; repair and replacement of wood windows and storefronts; replacement of awnings and canopies; joint sealants; painting; and related construction. The following addresses are included in the Facade Rehabilitation Project:

1	13-15 South Center	Pentz Appliance
2	14-16-18 North Center	Salon & Paw Spa
3	1 West Main	Staging to Sell It
4	(Not Used)	
5	21 West Main	Vacant
6	23 West Main	Vacant
7	25 West Main	Smokin G’s BBQ
8	14 West Main	Stepping Stone

   2. The Work includes historic buildings being reviewed under Section 106 NHPA and HUD regulations for NEPA (24 CFR Part 58.5[b]). The Work will follow historic guidelines established by the Secretary of the Interior and Standards for the Treatment of Historic Properties.

B. Type of Contract
   1. Project will be constructed under a single prime contract.

C. Project Completion:
   1. Schedule the Work to achieve Substantial Completion as follows:
      a. Work, as itemized on Schedule of Values worksheet included in Section 01 29 00 “Payment Procedures” and indicated on the Drawings, shall be Substantial Complete on or before **June 30, 2024.**
         1) It is agreed that the contract time is of prime importance and of the essence of this contract and failure to complete the Work on schedule will cause the Owner to sustain substantial damages.
         2) No liquidated damages will be assessed, but the Contractor is required to cooperate fully in meeting this date.

1.4 ACCESS TO SITE

A. General: Contractor shall have limited use of Project site for construction operations as indicated on Drawings by the Contract limits and as indicated by requirements of this Section.

B. Use of Site: Limit use of Project site to work in areas indicated. Do not disturb portions of Project site beyond areas in which the Work is indicated.
   1. Driveways, Walkways and Entrances: Keep driveways loading areas, and entrances serving premises clear and available to building owners and emergency vehicles at all times. Do not use these areas for parking or storage of materials.
      a. Schedule deliveries to minimize space and time requirements for storage of materials and equipment on-site.

C. Condition of Existing Buildings: Maintain portions of existing buildings affected by construction operations in a weathertight condition throughout construction period. Repair damage caused by construction operations.

D. Annual Events: so that construction work will not able to take place during this time.
   1. None.

1.5 WORK UNDER OWNER'S SEPARATE CONTRACTS

A. Work with Separate Contractors: Cooperate fully with Owner's separate contractors, so work on those contracts may be carried out smoothly, without interfering with or delaying Work under this Contract or other contracts. Coordinate the Work of this Contract with work performed under Owner's separate contracts.
   1. General Contractor shall provide a copy of their Project Schedule to Separate Contractors and shall update as appropriate.
   2. General Contractor shall schedule the work of the Separate Contractors and give them at least 72 hours’ notice as to when their work will be performed.
   3. General Contractor shall provide temporary enclosures to prevent weather and water infiltration at the Work resulting from the work of the Separate Contractors.

B. Concurrent Work: Owner has awarded separate contract(s) for the following construction operations at Project site. Those operations will be conducted simultaneously with work under this Contract.
   1. **Asbestos Abatement**: (contractor to be determined), for hazardous materials abatement.

1.6 COORDINATION WITH OCCUPANTS

A. Full Occupancy: Building owners and the general public will occupy site and existing building(s) during entire construction period. Cooperate with building owners during construction operations to minimize conflicts and facilitate the building owner's and the general public's continued usage. Perform the Work so as not to interfere with building owner's day-to-day operations. Maintain existing exits unless otherwise indicated.
   1. Maintain access to existing walkways, corridors, and other adjacent occupied or used facilities. Do not close or obstruct walkways, corridors, or other occupied or used facilities without written permission from building owners and approval of authorities having jurisdiction.
   2. Notify building owner(s) not less than 72 hours in advance of activities that will affect building owner's operations.

1.7 WORK RESTRICTIONS

A. Work Restrictions, General: Comply with restrictions on construction operations.
   1. Comply with limitations on use of public streets and other requirements of authorities having jurisdiction.
   2. Public Safety and Convenience: The Contractor shall at all times conduct the work so as to insure the least possible obstruction to traffic and inconvenience to the general public and residents in the vicinity of the work, and to insure the protection of persons and property in a manner satisfactory to the Owner. No road or street shall be closed to the public except with the permission of the Owner and proper governmental authorities. Fire hydrants on or adjacent to the work shall be kept accessible to fire-fighting equipment at all times. Temporary provisions shall be made by the Contractor to insure the use of sidewalks and the proper functioning of all gutters, sewer inlets, which shall not be obstructed except as approved by the Owner
   3. Business Access: Every effort shall be made to preserve existing sidewalks to provide access to businesses affected by the Work. The Contractor shall erect construction safety fencing between the work zones and pedestrian sidewalks. No business shall be denied pedestrian access for a period lasting longer than 48 hours.
      a. A minimum four-foot (4') width of clear walkway shall be maintained for pedestrian access to abutting businesses. Access must be maintained from a minimum of one direction at all times. A temporary access to the businesses shall be provided using wood planking or plywood sheets.
   4. Partial Street Closings: Notify appropriate City officials at least 72 hours prior to closing any streets. Warning signs and barricades shall be provided to adequately alert motorists to the closed streets.

B. On-Site Work Hours: Limit work to between the hours of 7:00 a.m. to 8:00 p.m. daily, unless otherwise approved in advance by Owner.

C. Existing Utility Interruptions: Do not interrupt utilities serving facilities occupied by building owner or others unless permitted under the following conditions and then only after providing temporary utility services according to requirements indicated:
   1. Notify building owner 72 hours in advance of proposed utility interruptions serving an unoccupied or occupied area.

D. Noise, Vibration, and Odors: Coordinate operations that may result in high levels of noise and vibration, odors, or other disruption to building owner's occupancy with building owner.
   1. Notify building owner not less than 72 hours in advance of proposed disruptive operations.
   2. Obtain building owner's written permission before proceeding with disruptive operations.

E. Controlled Substances: Use of tobacco products and other controlled substances on Project site or in occupied buildings is not permitted. Comply with building owners' policies, requirements of authorities having jurisdiction, or Iowa law, whichever is more stringent.

1.8 SPECIFICATION AND DRAWING CONVENTIONS

A. Specification Content: The Specifications use certain conventions for the style of language and the intended meaning of certain terms, words, and phrases when used in particular situations. These conventions are as follows:
   1. Imperative mood and streamlined language are generally used in the Specifications. The words "shall," "shall be," or "shall comply with," depending on the context, are implied where a colon (:) is used within a sentence or phrase.
   2. Specification requirements are to be performed by Contractor unless specifically stated otherwise.

B. Division 01 General Requirements: Requirements of Sections in Division 01 apply to the Work of all Sections in the Specifications.

C. Drawing Coordination: Requirements for materials and products identified on the Drawings are described in detail in the Specifications. One or more of the following are used on the Drawings to identify materials and products:
   1. Terminology: Materials and products are identified by the typical generic terms used in the individual Specifications Sections.
   2. Abbreviations: Materials and products are identified by abbreviations scheduled on Drawings.

PART 2 - PRODUCTS (Not Used)

PART 3 - EXECUTION (Not Used)

END OF SECTION 01 10 00

SECTION 01 21 00 - ALLOWANCES

PART 1 - GENERAL

1.1 RELATED DOCUMENTS

A. Drawings and general provisions of the Contract, including General and Supplementary Conditions and other Division 01 Specification Sections, apply to this Section.

1.2 SUMMARY

A. Section includes administrative and procedural requirements governing allowances.

B. Types of allowances include the following:
   1. Lump-sum allowances.

C. Related Requirements:
   1. Section 012600 "Contract Modification Procedures" for procedures for submitting and handling Change Orders.

1.3 DEFINITIONS

A. Allowance: A quantity of work or dollar amount included in the Contract, established in lieu of additional requirements, used to defer selection of actual materials and equipment to a later date when direction will be provided to Contractor. If necessary, additional requirements will be issued by Change Order.

1.4 SELECTION AND PURCHASE

A. At the earliest practical date after award of the Contract, advise Architect of the date when final selection, or purchase and delivery, of each product or system described by an allowance must be completed by the Owner to avoid delaying the Work.

B. At Architect's request, obtain proposals for each allowance for use in making final selections. Include recommendations that are relevant to performing the Work.

C. Purchase products and systems selected by Architect from the designated supplier.

1.5 ACTION SUBMITTALS

A. Submit proposals for purchase of products or systems included in allowances in the form specified for Change Orders.

1.6 INFORMATIONAL SUBMITTALS

A. Submit invoices or delivery slips to show actual quantities of materials delivered to the site for use in fulfillment of each allowance.

B. Submit time sheets and other documentation to show labor time and cost for installation of allowance items that include installation as part of the allowance.

C. Coordinate and process submittals for allowance items in same manner as for other portions of the Work.

1.7 LUMP-SUM ALLOWANCES

A. Allowance shall include cost to Contractor of specific products and materials ordered by Owner or selected by Architect under allowance and shall include taxes, freight, and delivery to Project site.

B. Allowance shall include cost Contractor's costs for receiving and handling at Project site, labor, installation, overhead and profit, and similar costs related to products and materials ordered by Owner or selected by Architect.

1.8 ADJUSTMENT OF ALLOWANCES

A. Allowance Adjustment: To adjust allowance amounts, prepare a Change Order proposal based on the difference between purchase amount and the allowance, multiplied by final measurement of work-in-place where applicable. If applicable, include reasonable allowances for cutting losses, tolerances, mixing wastes, normal product imperfections, required maintenance materials, and similar margins.
   1. Include installation costs in purchase amount only where indicated as part of the allowance.
   2. If requested, prepare explanation and documentation to substantiate distribution of overhead costs and other markups.
   3. Submit substantiation of a change in scope of Work, if any, claimed in Change Orders related to unit-cost allowances.
   4. Owner reserves the right to establish the quantity of work-in-place by independent quantity survey, measure, or count.

B. Submit claims for increased costs due to a change in the scope or nature of the allowance described in the Contract Documents, whether for the purchase order amount or Contractor's handling, labor, installation, overhead, and profit.
   1. Do not include Contractor's or subcontractor's indirect expense in the Change Order cost amount unless it is clearly shown that the nature or extent of Work has changed from what could have been foreseen from information in the Contract Documents.
   2. No change to Contractor's indirect expense is permitted for selection of higher- or lower-priced materials or systems of the same scope and nature as originally indicated.

PART 2 - PRODUCTS (Not Used)

PART 3 - EXECUTION

3.1 EXAMINATION

A. Examine products covered by an allowance promptly on delivery for damage or defects. Return damaged or defective products to manufacturer for replacement.

3.2 PREPARATION

A. Coordinate materials and their installation for each allowance with related materials and installations to ensure that each allowance item is completely integrated and interfaced with related work.

3.3 SCHEDULE OF ALLOWANCES

A. Allowance No. 1: Not Used.

B. Allowance No. 2: Lump-Sum Allowance: Include the sum of $38,000.00 for glazed tile (glazed architectural terra-cotta) replacement at Buildings 5, and 6.

1. This allowance includes material, receiving, handling, and installation costs, and Contractor overhead and profit.

C. Allowance No. 3: Lump-Sum Allowance: Include the total sum of $2,100.00 for three replacement light fixtures at Building 3 (Alternate #3) as per ceiling plan C3/A05.03b.
   1. This allowance includes material, receiving, handling, and installation costs, and Contractor overhead and profit.

END OF SECTION 01 21 00

SECTION 01 23 00 - ALTERNATES

PART 1 - GENERAL

1.1 RELATED DOCUMENTS

A. Drawings and general provisions of the Contract, including General and Supplementary Conditions and other Division 01 Specification Sections, apply to this Section.

1.2 SUMMARY

A. Section includes administrative and procedural requirements for alternates.

1.3 DEFINITIONS

A. Alternate: An amount proposed by bidders and stated on the Bid Form for certain work defined in the bidding requirements that may be added to or deducted from the base bid amount if Owner decides to accept a corresponding change either in the amount of construction to be completed or in the products, materials, equipment, systems, or installation methods described in the Contract Documents.
   1. Alternates described in this Section are part of the Work only if enumerated in the Agreement.
   2. The cost or credit for each alternate is the net addition to or deduction from the Contract Sum to incorporate alternate into the Work. No other adjustments are made to the Contract Sum.

1.4 PROCEDURES

A. Coordination: Revise or adjust affected adjacent work as necessary to completely integrate work of the alternate into Project.
   1. Include as part of each alternate, miscellaneous devices, accessory objects, and similar items incidental to or required for a complete installation whether or not indicated as part of alternate.

B. Notification: Immediately following award of the Contract, notify each party involved, in writing, of the status of each alternate. Indicate if alternates have been accepted, rejected, or deferred for later consideration. Include a complete description of negotiated revisions to alternates.

C. Execute accepted alternates under the same conditions as other work of the Contract.

D. Schedule: A schedule of alternates is included at the end of this Section. Specification Sections referenced in schedule contain requirements for materials necessary to achieve the work described under each alternate.

PART 2 - PRODUCTS (Not Used)

PART 3 - EXECUTION

3.1 SCHEDULE OF ALTERNATES

(Note: Description of work indicated here is only a brief summary. See Contract Documents, including drawings, for full definition of each Alternate.)

ALTERNATE No. 1:	ADD scope of work: • 1: replace awning(s) + remove canopy & repair plaster • 2: replace awning(s) • 5: replace awning(s) • 6: provide awning(s)
ALTERNATE No. 2:	ADD scope of work: • 1: replace stucco and repoint masonry • 1: rehabilitate windows • 2: masonry cleaning • 3: masonry cleaning
ALTERNATE No. 3:	ADD scope of work: • 2: exterior vestibules and storefront repairs • 3: remove panels, replace siding (front entrance, south & east) • 3: exterior vestibule and storefront repairs • 6: replace storefront
ALTERNATE No. 4:	ADD scope of work: • 1: replace windows • 2: rehabilitate windows • 3: rehabilitate windows + replace doors • 3: remove panels, replace siding (side entrance, east) • 5: rehabilitate door • 7: rehabilitate windows • 8: replace door, paint windows

END OF SECTION 01 23 00

SECTION 01 25 00 - SUBSTITUTION PROCEDURES

PART 1 - GENERAL

1.1 RELATED DOCUMENTS

A. Drawings and general provisions of the Contract, including General and Supplementary Conditions and other Division 01 Specification Sections, apply to this Section.

1.2 SUMMARY

A. Section includes administrative and procedural requirements for substitutions.

B. Related Sections:
   1. Division 01 Section "Product Requirements" for requirements for submitting comparable product submittals for products by listed manufacturers.
   2. Divisions 02 through 49 Sections for specific requirements and limitations for substitutions.

1.3 DEFINITIONS

A. Substitutions: Changes in products, materials, equipment, and methods of construction from those required by the Contract Documents and proposed by Contractor.
   1. Substitutions for Cause: Changes proposed by Contractor that are required due to changed Project conditions, such as unavailability of product, regulatory changes, or unavailability of required warranty terms.
   2. Substitutions for Convenience: Changes proposed by Contractor or Owner that are not required to meet other Project requirements but may offer advantage to Contractor or Owner.

1.4 SUBMITTALS

A. Substitution Requests: Submit three copies of each request for consideration. Identify product or fabrication or installation method to be replaced. Include Specification Section number and title and Drawing numbers and titles.
   1. Substitution Request Form: Use “Request for Substitution” Form included in Division 00 Section “Procurement Substitution Procedures.”
   2. Documentation: Show compliance with requirements for substitutions and the following, as applicable:
      a. Statement indicating why specified product or fabrication or installation cannot be provided, if applicable.
      b. Coordination information, including a list of changes or modifications needed to other parts of the Work and to construction performed by Owner and separate contractors, that will be necessary to accommodate proposed substitution.
      c. Detailed comparison of significant qualities of proposed substitution with those of the Work specified. Include annotated copy of applicable specification section. Significant qualities may include attributes such as performance, weight, size, durability, visual effect, sustainable design characteristics, warranties, and specific features and requirements indicated. Indicate deviations, if any, from the Work specified.
      d. Product Data, including drawings and descriptions of products and fabrication and installation procedures.
      e. Samples, where applicable or requested.
      f. Certificates and qualification data, where applicable or requested.

g. List of similar installations for completed projects with project names and addresses and names and addresses of architects and owners.
h. Material test reports from a qualified testing agency indicating and interpreting test results for compliance with requirements indicated.
i. Research reports evidencing compliance with building code in effect for Project, from ICC-ES.
j. Detailed comparison of Contractor's construction schedule using proposed substitution with products specified for the Work, including effect on the overall Contract Time. If specified product or method of construction cannot be provided within the Contract Time, include letter from manufacturer, on manufacturer's letterhead, stating date of receipt of purchase order, lack of availability, or delays in delivery.
k. Cost information, including a proposal of change, if any, in the Contract Sum.
l. Contractor's certification that proposed substitution complies with requirements in the Contract Documents except as indicated in substitution request, is compatible with related materials, and is appropriate for applications indicated.
m. Contractor's waiver of rights to additional payment or time that may subsequently become necessary because of failure of proposed substitution to produce indicated results.

3. Architect's Action: If necessary, Architect will request additional information or documentation for evaluation within seven days of receipt of a request for substitution. Architect will notify Contractor of acceptance or rejection of proposed substitution within 15 days of receipt of request, or seven days of receipt of additional information or documentation, whichever is later.
   a. Forms of Acceptance: Change Order, Construction Change Directive, or Architect's Supplemental Instructions for minor changes in the Work.
   b. Use product specified if Architect does not issue a decision on use of a proposed substitution within time allocated.

1.5 QUALITY ASSURANCE

A. Compatibility of Substitutions: Investigate and document compatibility of proposed substitution with related products and materials. Engage qualified testing agency to perform compatibility tests recommended by manufacturers.

1.6 PROCEDURES

A. Coordination: Modify or adjust affected work as necessary to integrate work of the approved substitutions.

PART 2 - PRODUCTS

2.1 SUBSTITUTIONS

A. Substitutions for Convenience: Not allowed.

B. Substitutions for Cause: Submit requests for substitution immediately upon discovery of need for change, but not later than 15 days prior to time required for preparation and review of related submittals.
   1. Conditions: Architect will consider Contractor's request for substitution when the following conditions are satisfied. If the following conditions are not satisfied, Architect will return requests without action, except to record noncompliance with these requirements:
      a. Requested substitution is consistent with the Contract Documents and will produce indicated results.

b. Substitution request is fully documented and properly submitted.
c. Requested substitution will not adversely affect Contractor's construction schedule.
d. Requested substitution has received necessary approvals of authorities having jurisdiction.
e. Requested substitution is compatible with other portions of the Work.
f. Requested substitution has been coordinated with other portions of the Work.
g. Requested substitution provides specified warranty.
h. If requested substitution involves more than one contractor, requested substitution has been coordinated with other portions of the Work, is uniform and consistent, is compatible with other products, and is acceptable to all contractors involved.

PART 3 - EXECUTION (Not Used)

END OF SECTION 01 25 00

SECTION 01 26 00 - CONTRACT MODIFICATION PROCEDURES

PART 1 - GENERAL

1.1 SUMMARY

A. Section includes administrative and procedural requirements for handling and processing Contract modifications.

B. Related Sections:
   1. Division 01 Section "Product Requirements" for administrative procedures for handling requests for substitutions made after Contract award.

1.2 MINOR CHANGES IN THE WORK

A. Architect will issue supplemental instructions authorizing minor changes in the Work, not involving adjustment to the Contract Sum or the Contract Time, on AIA Document G710, "Architect's Supplemental Instructions."

1.3 PROPOSAL REQUESTS

A. Owner-Initiated Proposal Requests: Architect will issue a detailed description of proposed changes in the Work that may require adjustment to the Contract Sum or the Contract Time. If necessary, the description will include supplemental or revised Drawings and Specifications.
   1. Proposal Requests issued by Architect are not instructions either to stop work in progress or to execute the proposed change.
   2. Within time specified in Proposal Request or 14 days, when not otherwise specified, after receipt of Proposal Request, submit a quotation estimating cost adjustments to the Contract Sum and the Contract Time necessary to execute the change.
      a. Include a list of quantities of products required or eliminated and unit costs, with total amount of purchases and credits to be made. If requested, furnish survey data to substantiate quantities.
      b. Indicate applicable taxes, delivery charges, equipment rental, and amounts of trade discounts.
      c. Include costs of labor and supervision directly attributable to the change.
      d. Include an updated Contractor's construction schedule that indicates the effect of the change, including, but not limited to, changes in activity duration, start and finish times, and activity relationship. Use available total float before requesting an extension of the Contract Time.
      e. Quotation Form: Use forms acceptable to Architect.

B. Contractor-Initiated Proposals: If latent or changed conditions require modifications to the Contract, Contractor may initiate a claim by submitting a request for a change to Architect.
   1. Include a statement outlining reasons for the change and the effect of the change on the Work. Provide a complete description of the proposed change. Indicate the effect of the proposed change on the Contract Sum and the Contract Time.
   2. Include a list of quantities of products required or eliminated and unit costs, with total amount of purchases and credits to be made. If requested, furnish survey data to substantiate quantities.
   3. Indicate applicable taxes, delivery charges, equipment rental, and amounts of trade discounts.
   4. Include costs of labor and supervision directly attributable to the change.
   5. Include an updated Contractor's construction schedule that indicates the effect of the change, including, but not limited to, changes in activity duration, start and finish times,

and activity relationship. Use available total float before requesting an extension of the Contract Time.

6. Comply with requirements in Division 01 Section "Substitution Procedures" if the proposed change requires substitution of one product or system for product or system specified.
7. Proposal Request Form: Use form acceptable to Architect.

1.4 ADMINISTRATIVE CHANGE ORDERS

A. Allowance Adjustment: Refer to Division 01 Section "Allowances" for administrative procedures for preparation of Change Order Proposal for adjusting the Contract Sum to reflect actual costs of allowances.

B. Unit Price Adjustment: Refer to Division 01 Section "Unit Prices" for administrative procedures for preparation of Change Order Proposal for adjusting the Contract Sum to reflect measured scope of unit price work.

1.5 CHANGE ORDER PROCEDURES

A. On Owner's approval of a Proposal Request, Architect will issue a Change Order for signatures of Owner and Contractor on AIA Document G701.

1.6 CONSTRUCTION CHANGE DIRECTIVE

A. Construction Change Directive: Architect may issue a Construction Change Directive on AIA Document G714. Construction Change Directive instructs Contractor to proceed with a change in the Work, for subsequent inclusion in a Change Order.
   1. Construction Change Directive contains a complete description of change in the Work. It also designates method to be followed to determine change in the Contract Sum or the Contract Time.

B. Documentation: Maintain detailed records on a time and material basis of work required by the Construction Change Directive.
   1. After completion of change, submit an itemized account and supporting data necessary to substantiate cost and time adjustments to the Contract.

PART 2 - PRODUCTS (Not Used)

PART 3 - EXECUTION (Not Used)

END OF SECTION 01 26 00

SECTION 01 29 00 - PAYMENT PROCEDURES

PART 1 - GENERAL

1.1 RELATED DOCUMENTS

A. Drawings and general provisions of the Contract, including General and Supplementary Conditions and other Division 01 Specification Sections, apply to this Section.

1.2 SUMMARY

A. This Section specifies administrative and procedural requirements necessary to prepare and process Applications for Payment.

B. Related Sections:
   1. Division 01 Section "Contract Modification Procedures" for administrative procedures for handling changes to the Contract.
   2. Division 01 Section "Construction Progress Documentation" for administrative requirements governing the preparation and submittal of the Contractor's construction schedule.
   3. Division 01 Section "Submittal Procedures" for administrative requirements governing the preparation and submittal of the submittal schedule.

1.3 DEFINITIONS

A. Schedule of Values: A statement furnished by Contractor allocating portions of the Contract Sum to various portions of the Work and used as the basis for reviewing Contractor's Applications for Payment.

1.4 SCHEDULE OF VALUES

A. Schedule of Values, General:
   1. Contractor shall coordinate format, content, and breakdown of schedule of values with Owner's Grant Administrator through the Architect to facilitate tracking and processing grant funds. The purpose of the breakout is to track the grants and show the needed matching amounts needed to complete the grants.
   2. Submit the schedule of values to Architect <u>within 48 hours after the bid opening</u>.

      Provide, either as a separate breakout schedule or incorporated directly into the Schedule of Values, a detailed valuation of each individual business address listed in Section 01 10 00 "Summary" and Section 01 23 00 "Alternates".

B. Coordination: Coordinate preparation of the schedule of values with preparation of Contractor's construction schedule.
   1. Correlate line items in the schedule of values with other required administrative forms and schedules, including the following:
      a. Application for Payment forms with continuation sheets.
      b. Submittal schedule.
      c. Items required to be indicated as separate activities in Contractor's construction schedule.
   2. Subschedules for Separate Elements of Work: Where the Contractor's construction schedule defines separate elements of the Work, provide subschedules showing values correlated with each element.

C. Format and Content:
   1. Identification: Include the following Project identification on the schedule of values:
      a. Project name and location.
      b. Name of Architect.
      c. Architect's project number.
      d. Contractor's name and address.
      e. Date of submittal.
   1. Submit draft of AIA Document G703 Continuation Sheets and breakout sheets indicated.
   2. Provide a breakdown of the Contract Sum as described and in enough detail to facilitate continued evaluation of Applications for Payment and progress reports. Coordinate with the Project Manual table of contents.
   3. Round amounts to nearest whole dollar; total shall equal the Contract Sum.
   4. Provide a separate line item in the schedule of values for each part of the Work where Applications for Payment may include materials or equipment purchased or fabricated and stored, but not yet installed.
      a. Differentiate between items stored on-site and items stored off-site. If required, include evidence of insurance.
   5. Provide separate line items in the schedule of values for initial cost of materials, for each subsequent stage of completion, and for total installed value of that part of the Work.
   6. Each item in the schedule of values and Applications for Payment shall be complete. Include total cost and proportionate share of general overhead and profit for each item.
      a. Temporary facilities and other major cost items that are not direct cost of actual work-in-place may be shown either as separate line items in the schedule of values or distributed as general overhead expense, at Contractor's option.
   7. Schedule Updating: Update and resubmit the schedule of values before the next Applications for Payment when Change Orders or Construction Change Directives result in a change in the Contract Sum.

1.5 APPLICATIONS FOR PAYMENT

A. Each Application for Payment shall be consistent with previous applications and payments as certified by Architect and paid for by Owner.
   1. Initial Application for Payment, Application for Payment at time of Substantial Completion, and final Application for Payment involve additional requirements.
   2. Contractor shall coordinate format, content, and breakdown of Application for Payment with Owner’s Grant Administrator through Architect to facilitate tracking and processing grant funds.

B. Payment Application Times: The date for each progress payment is indicated in the Agreement between Owner and Contractor. The period of construction work covered by each Application for Payment is the period indicated in the Agreement.

C. Application for Payment Forms: Use AIA Document G702 and AIA Document G703 as form for Applications for Payment.

D. Application Preparation: Complete every entry on form. Notarize and execute by a person authorized to sign legal documents on behalf of Contractor. Architect will return incomplete applications without action.
   1. Entries shall match data on the schedule of values and Contractor's construction schedule. Use updated schedules if revisions were made.
   2. Include amounts for work completed following previous Application for Payment, whether or not payment has been received. Include only amounts for work completed at time of Application for Payment.
   3. Include amounts of Change Orders and Construction Change Directives issued before last day of construction period covered by application.

E. Davis-Bacon and Related Acts: This project is funded, in part, by a federal grant. Rules and provisions of the Davis Bacon and Related Acts apply to this project. It is the responsibility of the Contractor to acquire current appropriate and necessary publications and materials regarding the Davis-Bacon and Related Acts and to comply with its rules and provisions as they apply to this Project.

1. All labor performed on site shall be subject to wage restrictions, reporting, posting of notice at the work site, and associated federal penalties for failure to comply with the federal Davis-Bacon and Related Acts.
2. All wages for on-site labor shall be greater than or equal to the minimum wage rates of federal Davis–Bacon and Related Acts as listed for:

   Marshall County, Iowa

   Current wage determination information for the county can be found at www.wdol.gov. Request work classifications and wage rates that do not appear on the wage determination information in writing through the contract administrator.
3. Payrolls for all labor shall be reported on the appropriate forms, shall be certified by employer, and shall be submitted weekly to the contract administrator.
4. Prior to initial pay application provide the contract administrator a list of labor classifications anticipated to be employed and providing on site labor for this project.

F. Stored Materials: Include in Application for Payment amounts applied for materials or equipment purchased or fabricated and stored, but not yet installed. Differentiate between items stored on-site and items stored off-site.

1. Provide name and location of storage facility, detailed list of stored materials, certificate of insurance, evidence of transfer of title to Owner, and consent of surety to payment, for stored materials.
2. Provide supporting documentation that verifies amount requested, such as paid invoices. Match amount requested with amounts indicated on documentation; do not include overhead and profit on stored materials.
3. Provide summary documentation for stored materials indicating the following:
   a. Materials previously stored and included in previous Applications for Payment.
   b. Work completed for this Application utilizing previously stored materials.
   c. Additional materials stored with this Application.
   d. Total materials remaining stored, including materials with this Application.

G. Transmittal: Submit four signed and notarized original copies of each Application for Payment to Architect by a method ensuring receipt within 48 hours. One copy shall include waivers of lien and similar attachments if required.

1. Transmit each copy with a transmittal form listing attachments and recording appropriate information about application.

NOTE: electronic copy (PDF) of the Application for Payment may be used in lieu of original copies, if acceptable to all parties.

H. Initial Application for Payment: Administrative actions and submittals that **must precede or coincide** with submittal of first Application for Payment include the following:

1. List of subcontractors.
2. Schedule of values.
3. Contractor's construction schedule (preliminary if not final).
4. Products list (preliminary if not final).
5. Submittal schedule (preliminary if not final).
6. List of Contractor's staff assignments.
7. List of Contractor's principal consultants.
8. Copies of building permits.

9. Certificates of insurance and insurance policies.
10. Performance and payment bonds.

NOTE: Failure to provide submittals shown above may result in delay or rejection of the Application for Payment.

I. Application for Payment at Substantial Completion: After issuing the Certificate of Substantial Completion, submit an Application for Payment showing 100 percent completion for portion of the Work claimed as substantially complete.
   1. Include documentation supporting claim that the Work is substantially complete and a statement showing an accounting of changes to the Contract Sum.
   2. This application shall reflect Certificates of Partial Substantial Completion issued previously for Owner occupancy of designated portions of the Work.

J. Final Payment Application: Submit final Application for Payment with releases and supporting documentation not previously submitted and accepted, including, but not limited, to the following:
   1. Evidence of completion of Project closeout requirements.
   2. Insurance certificates for products and completed operations where required and proof that taxes, fees, and similar obligations were paid.
   3. Updated final statement, accounting for final changes to the Contract Sum.
   4. AIA Document G706, "Contractor's Affidavit of Payment of Debts and Claims."
   5. AIA Document G706A, "Contractor's Affidavit of Release of Liens."
   6. AIA Document G707, "Consent of Surety to Final Payment."
   7. Evidence that claims have been settled.

PART 2 - PRODUCTS (Not Used)

PART 3 - EXECUTION (Not Used)

END OF SECTION 01 29 00

SECTION 01 31 00 - PROJECT MANAGEMENT AND COORDINATION

PART 1 - GENERAL

1.1 RELATED DOCUMENTS

A. Drawings and general provisions of the Contract, including General and Supplementary Conditions and other Division 01 Specification Sections, apply to this Section.

1.2 SUMMARY

A. Section includes administrative provisions for coordinating construction operations on Project including, but not limited to, the following:
   1. General project coordination procedures.
   2. Administrative and supervisory personnel.
   3. Requests for Information (RFIs).
   4. Project meetings.

B. Related Sections:
   1. Division 01 Section "Construction Progress Documentation" for preparing and submitting Contractor's construction schedule.
   2. Division 01 Section "Execution" for procedures for coordinating general installation and field-engineering services, including establishment of benchmarks and control points.
   3. Division 01 Section "Closeout Procedures" for coordinating closeout of the Contract.

1.3 DEFINITIONS

A. RFI: Request from Owner, Architect, or Contractor seeking information from each other during construction.

1.4 COORDINATION

A. Coordination: Coordinate construction operations included in different Sections of the Specifications to ensure efficient and orderly installation of each part of the Work. Coordinate construction operations, included in different Sections, which depend on each other for proper installation, connection, and operation.
   1. Schedule construction operations in sequence required to obtain the best results where installation of one part of the Work depends on installation of other components, before or after its own installation.
   2. Coordinate installation of different components to ensure maximum performance and accessibility for required maintenance, service, and repair.
   3. Make adequate provisions to accommodate items scheduled for later installation.

B. Prepare memoranda for distribution to each party involved, outlining special procedures required for coordination. Include such items as required notices, reports, and list of attendees at meetings.
   1. Prepare similar memoranda for Owner and separate contractors if coordination of their Work is required.

C. Administrative Procedures: Coordinate scheduling and timing of required administrative procedures with other construction activities to avoid conflicts and to ensure orderly progress of the Work. Such administrative activities include, but are not limited to, the following:
   1. Preparation of Contractor's construction schedule.
   2. Preparation of the schedule of values.

3. Installation and removal of temporary facilities and controls.
4. Delivery and processing of submittals.
5. Progress meetings.
6. Preinstallation conferences.
7. Project closeout activities.
8. Startup and adjustment of systems.
9. Project closeout activities.

D. Conservation: Coordinate construction activities to ensure that operations are carried out with consideration given to conservation of energy, water, and materials. Coordinate use of temporary utilities to minimize waste.
   1. Salvage materials and equipment involved in performance of, but not actually incorporated into, the Work. Refer to other Sections for disposition of salvaged materials that are designated as Owner's property.

1.5 KEY PERSONNEL

A. Key Personnel Names: Within 15 days of starting construction operations, submit a list of key personnel assignments, including superintendent and other personnel in attendance at Project site. Identify individuals and their duties and responsibilities; list addresses and telephone numbers, including home, office, and cellular telephone numbers and email addresses. Provide names, addresses, and telephone numbers of individuals assigned as standbys in the absence of individuals assigned to Project.
   1. Post copies of list in project meeting room, in temporary field office, and by each temporary telephone. Keep list current at all times.

1.6 REQUESTS FOR INFORMATION (RFIs)

A. General: Immediately on discovery of the need for additional information or interpretation of the Contract Documents, Contractor shall prepare and submit an RFI in the form specified.
   1. Architect will return RFIs submitted to Architect by other entities controlled by Contractor with no response.
   2. Coordinate and submit RFIs in a prompt manner so as to avoid delays in Contractor's work or work of subcontractors.

B. Content of the RFI: Include a detailed, legible description of item needing information or interpretation and the following:
   1. Project name.
   2. Project number.
   3. Date.
   4. Name of Contractor.
   5. Name of Architect.
   6. RFI number, numbered sequentially.
   7. RFI subject.
   8. Specification Section number and title and related paragraphs, as appropriate.
   9. Drawing number and detail references, as appropriate.
   10. Field dimensions and conditions, as appropriate.
   11. Contractor's suggested resolution. If Contractor's solution(s) impacts the Contract Time or the Contract Sum, Contractor shall state impact in the RFI.
   12. Contractor's signature.
   13. Attachments: Include sketches, descriptions, measurements, photos, Product Data, Shop Drawings, coordination drawings, and other information necessary to fully describe items needing interpretation.
      a. Include dimensions, thicknesses, structural grid references, and details of affected materials, assemblies, and attachments on attached sketches.

C. RFI Forms: Software-generated form with substantially the same content as indicated above, acceptable to Architect.

D. Architect's Action: Architect will review each RFI, determine action required, and respond.
   1. The following RFIs will be returned without action:
      a. Requests for approval of submittals.
      b. Requests for approval of substitutions.
      c. Requests for coordination information already indicated in the Contract Documents.
      d. Requests for adjustments in the Contract Time or the Contract Sum.
      e. Requests for interpretation of Architect's actions on submittals.
      f. Incomplete RFIs or inaccurately prepared RFIs.
   2. Architect's action may include a request for additional information, in which case Architect's time for response will date from time of receipt of additional information.
   3. Architect's action on RFIs that may result in a change to the Contract Time or the Contract Sum may be eligible for Contractor to submit Change Proposal according to Division 01 Section "Contract Modification Procedures."
      a. If Contractor believes the RFI response warrants change in the Contract Time or the Contract Sum, notify Architect in writing within 7 days of receipt of the RFI response.

E. On receipt of Architect's action, update the RFI log and immediately distribute the RFI response to affected parties. Review response and notify Architect within seven days if Contractor disagrees with response.

F. RFI Log: Prepare, maintain, and submit a tabular log of RFIs organized by the RFI number. Submit log weekly. Include the following:
   1. Project name.
   2. Name and address of Contractor.
   3. Name and address of Architect.
   4. RFI number including RFIs that were dropped and not submitted.
   5. RFI description.
   6. Date the RFI was submitted.
   7. Date Architect's response was received.
   8. Identification of related Minor Change in the Work, Construction Change Directive, and Proposal Request, as appropriate.

1.7 PROJECT MEETINGS

A. General: Schedule and conduct meetings and conferences at Project site, unless otherwise indicated.
   1. Attendees: Inform participants and others involved, and individuals whose presence is required, of date and time of each meeting. Notify Owner and Architect of scheduled meeting dates and times.
   2. Agenda: Prepare the meeting agenda. Distribute the agenda to all invited attendees.
   3. Minutes: Entity responsible for conducting meeting will record significant discussions and agreements achieved. Distribute the meeting minutes to everyone concerned, including Owner and Architect, within three days of the meeting.

B. Preconstruction Conference: Architect will schedule and conduct a preconstruction conference before starting construction, at a time convenient to Owner, Architect, and Contractor.
   1. Conduct the conference to review responsibilities and personnel assignments.
   2. Attendees: Authorized representatives of Owner, Architect, and their consultants; Contractor and its superintendent; major subcontractors; suppliers; and other concerned

parties shall attend the conference. Participants at the conference shall be familiar with Project and authorized to conclude matters relating to the Work.

3. Agenda: Discuss items of significance that could affect progress, including the following:
   a. Tentative construction schedule.
   b. Phasing.
   c. Critical work sequencing and long-lead items.
   d. Designation of key personnel and their duties.
   e. Lines of communications.
   f. Procedures for processing field decisions and Change Orders.
   g. Procedures for RFIs.
   h. Procedures for testing and inspecting.
   i. Procedures for processing Applications for Payment.
   j. Distribution of the Contract Documents.
   k. Submittal procedures.
   l. Sustainable design requirements.
   m. Preparation of record documents.
   n. Use of the premises and existing building.
   o. Work restrictions.
   p. Working hours.
   q. Owner's occupancy requirements.
   r. Responsibility for temporary facilities and controls.
   s. Procedures for moisture and mold control.
   t. Procedures for disruptions and shutdowns.
   u. Construction waste management and recycling.
   v. Parking availability.
   w. Office, work, and storage areas.
   x. Equipment deliveries and priorities.
   y. First aid.
   z. Security.
   aa. Progress cleaning.
4. Minutes: Entity responsible for conducting meeting will record and distribute meeting minutes.

C. Preinstallation Conferences: Conduct a pre-installation conference at Project site before each construction activity that requires coordination with other construction.
   1. Attendees: Installer and representatives of manufacturers and fabricators involved in or affected by the installation and its coordination or integration with other materials and installations that have preceded or will follow, shall attend the meeting. Advise Architect of scheduled meeting dates.
   2. Agenda: Review progress of other construction activities and preparations for the particular activity under consideration, including requirements for the following:
      a. Contract Documents.
      b. Options.
      c. Related RFIs.
      d. Related Change Orders.
      e. Purchases.
      f. Deliveries.
      g. Submittals.
      h. Review of mockups.
      i. Possible conflicts.
      j. Compatibility problems.
      k. Time schedules.
      l. Weather limitations.
      m. Manufacturer's written recommendations.
      n. Warranty requirements.
      o. Compatibility of materials.

p. Acceptability of substrates.
q. Temporary facilities and controls.
r. Space and access limitations.
s. Regulations of authorities having jurisdiction.
t. Testing and inspecting requirements.
u. Installation procedures.
v. Coordination with other work.
w. Required performance results.
x. Protection of adjacent work.
y. Protection of construction and personnel.

3. Record significant conference discussions, agreements, and disagreements, including required corrective measures and actions.
4. Reporting: Distribute minutes of the meeting to each party present and to other parties requiring information.
5. Do not proceed with installation if the conference cannot be successfully concluded. Initiate whatever actions are necessary to resolve impediments to performance of the Work and reconvene the conference at earliest feasible date.

D. Project Closeout Conference: Schedule and conduct a Project closeout conference, at a time convenient to Owner and Architect, but no later than 90 days prior to the scheduled date of Substantial Completion.

1. Conduct the conference to review requirements and responsibilities related to Project closeout.
2. Attendees: Authorized representatives of Owner, Architect, and their consultants; Contractor and its superintendent; major subcontractors; suppliers; and other concerned parties shall attend the meeting. Participants at the meeting shall be familiar with Project and authorized to conclude matters relating to the Work.
3. Agenda: Discuss items of significance that could affect or delay Project closeout, including the following:
   a. Preparation of record documents.
   b. Procedures required prior to inspection for Substantial Completion and for final inspection for acceptance.
   c. Submittal of written warranties.
   d. Requirements for preparing sustainable design documentation.
   e. Requirements for preparing operations and maintenance data.
   f. Requirements for demonstration and training.
   g. Preparation of Contractor's punch list.
   h. Procedures for processing Applications for Payment at Substantial Completion and for final payment.
   i. Submittal procedures.
   j. Coordination of separate contracts.
   k. Owner's partial occupancy requirements.
   l. Installation of Owner's furniture, fixtures, and equipment.
   m. Responsibility for removing temporary facilities and controls.
4. Minutes: Entity conducting meeting will record and distribute meeting minutes.

E. Progress Meetings: Architect will conduct monthly progress meetings.

1. Coordinate dates of meetings with preparation of payment requests.
2. **Meetings may be suspended, or the frequency adjusted, according to the pace or progress of construction.** For example, winter weather may delay or slow progress of construction, therefore meetings may be suspended or held less frequently than other seasons. **Conference calls or video conferences may also be more appropriate than on-site meetings, during certain periods of construction.** Coordinate adjustments with Owner and Architect.
3. Attendees: In addition to representatives of Owner and Architect, each contractor, subcontractor, supplier, and other entity concerned with current progress or involved in

planning, coordination, or performance of future activities shall be represented at these meetings. All participants at the meeting shall be familiar with Project and authorized to conclude matters relating to the Work.

4. Agenda: Review and correct or approve minutes of previous progress meeting. Review other items of significance that could affect progress. Include topics for discussion as appropriate to status of Project.
   a. Contractor's Construction Schedule: Review progress since the last meeting. Determine whether each activity is on time, ahead of schedule, or behind schedule, in relation to Contractor's construction schedule. Determine how construction behind schedule will be expedited; secure commitments from parties involved to do so. Discuss whether schedule revisions are required to ensure that current and subsequent activities will be completed within the Contract Time.
      1) Review schedule for next period.
   b. Review present and future needs of each entity present, including the following:
      1) Interface requirements.
      2) Sequence of operations.
      3) Status of submittals.
      4) Deliveries.
      5) Off-site fabrication.
      6) Access.
      7) Site utilization.
      8) Temporary facilities and controls.
      9) Progress cleaning.
      10) Quality and work standards.
      11) Status of correction of deficient items.
      12) Field observations.
      13) Status of RFIs.
      14) Status of proposal requests.
      15) Pending changes.
      16) Status of Change Orders.
      17) Pending claims and disputes.
      18) Documentation of information for payment requests.
5. Minutes: Entity responsible for conducting the meeting will record and distribute the meeting minutes to each party present and to parties requiring information.
   a. Schedule Updating: Revise Contractor's construction schedule after each progress meeting where revisions to the schedule have been made or recognized. Issue revised schedule concurrently with the report of each meeting.

F. Coordination Meetings: Conduct Project coordination meetings as deemed necessary. Project coordination meetings are in addition to specific meetings held for other purposes, such as progress meetings and pre-installation conferences.
   1. Attendees: In addition to representatives of Owner and Architect, each contractor, subcontractor, supplier, and other entity concerned with current progress or involved in planning, coordination, or performance of future activities shall be represented at these meetings. All participants at the meetings shall be familiar with Project and authorized to conclude matters relating to the Work.
   2. Agenda: Review and correct or approve minutes of the previous coordination meeting. Review other items of significance that could affect progress. Include topics for discussion as appropriate to status of Project.
      a. Combined Contractor's Construction Schedule: Review progress since the last coordination meeting. Determine whether each contract is on time, ahead of schedule, or behind schedule, in relation to combined Contractor's construction schedule. Determine how construction behind schedule will be expedited; secure commitments from parties involved to do so. Discuss whether schedule revisions are required to ensure that current and subsequent activities will be completed within the Contract Time.

b. Schedule Updating: Revise combined Contractor's construction schedule after each coordination meeting where revisions to the schedule have been made or recognized. Issue revised schedule concurrently with report of each meeting.

c. Review present and future needs of each contractor present, including the following:

1) Interface requirements.
2) Sequence of operations.
3) Status of submittals.
4) Deliveries.
5) Off-site fabrication.
6) Access.
7) Site utilization.
8) Temporary facilities and controls.
9) Work hours.
10) Hazards and risks.
11) Progress cleaning.
12) Quality and work standards.
13) Change Orders.

3. Reporting: Record meeting results and distribute copies to everyone in attendance and to others affected by decisions or actions resulting from each meeting.

PART 2 - PRODUCTS (Not Used)

PART 3 - EXECUTION (Not Used)

END OF SECTION 01 31 00

SECTION 01 32 00 - CONSTRUCTION PROGRESS DOCUMENTATION

PART 1 - GENERAL

1.1 RELATED DOCUMENTS

A. Drawings and general provisions of the Contract, including General and Supplementary Conditions and other Division 01 Specification Sections, apply to this Section.

1.2 SUMMARY

A. Section includes administrative and procedural requirements for documenting the progress of construction during performance of the Work, including the following:
   1. Contractor's construction schedule.
   2. Field condition reports.
   3. Special reports.

B. Related Sections:
   1. Division 01 Section "Submittal Procedures" for submitting schedules and reports.
   2. Division 01 Section "Quality Requirements" for submitting a schedule of tests and inspections.

1.3 INFORMATIONAL SUBMITTALS

A. Format for Submittals: Submit required submittals in the following format(s):
   1. PDF electronic file.

B. Contractor's Construction Schedule: Initial schedule, of size required to display entire schedule for entire construction period.

C. Field Condition Reports: Submit at time of discovery of differing conditions.

D. Special Reports: Submit at time of unusual event.

1.4 COORDINATION

A. Coordinate Contractor's construction schedule with the schedule of values, submittal schedule, progress reports, payment requests, and other required schedules and reports.
   1. Secure time commitments for performing critical elements of the Work from entities involved.
   2. Coordinate each construction activity in the network with other activities and schedule them in proper sequence.

PART 2 - PRODUCTS

2.1 CONTRACTOR'S CONSTRUCTION SCHEDULE, GENERAL

A. Contractor’s Construction Schedule, General:
   1. The Contractor shall submit to the Architect and Owner **at least seven days prior** to the Preconstruction Conference a planned sequence of construction, indicating the order and approximate dates of initiation and completion of each element of the Project. Specific content and format of the Contractor’s Construction Schedule will be finalized and agreed upon at the time of the Preconstruction Conference. In general, the Schedule will be required to comply with the following:

a. Provide a separate Construction Schedule for the Facade Rehabilitation portion of the Work. Identify each address as a separate activity for each main element of the Work. Individual addresses are listed in Section 01 10 00 “Summary”.
b. Include substantial completion dates for the Work in compliance.

NOTE: Failure to provide schedule may result in delay or rejection of the Application for Payment.

B. Time Frame: Extend schedule from date established for the Notice to Proceed to date of final completion.
1. Contract completion date shall not be changed by submission of a schedule that shows an early completion date, unless specifically authorized by Change Order.

C. Activities: Treat each individual building address as a separate element of the Work. Comply with the following:
1. Activity Duration: Define activities so no activity is longer than 7 days, unless specifically allowed by Architect.
2. Procurement Activities: Include procurement process activities for long lead items and major items, requiring a cycle of more than 60 days, as separate activities in schedule. Procurement cycle activities include, but are not limited to, submittals, approvals, purchasing, fabrication, and delivery.
3. Submittal Review Time: Include review and resubmittal times indicated in Division 01 Section "Submittal Procedures" in schedule. Coordinate submittal review times in Contractor's construction schedule with submittal schedule.
4. Substantial Completion Dates: Indicate completion in advance of date established for Substantial Completion and allow time for Architect's administrative procedures necessary for certification of Substantial Completion.
5. Punch List and Final Completion: Include not more than 30 days for punch list and final completion.

D. Constraints: Include constraints and work restrictions indicated in the Contract Documents and as follows in schedule and show how the sequence of the Work is affected.
1. Work by Owner: Include a separate activity for each portion of the Work performed by Owner.
2. Work Restrictions: Include the effect of the following items in the schedule:
   a. Coordination with existing construction.
   b. Protection of existing construction.
   c. Uninterruptible services.
   d. Existing occupancies and public usage
   e. Public safety and convenience.
3. Work Stages: Indicate important stages of construction for each major portion of the Work, including, but not limited to, the following:
   a. Submittals.
   b. Purchases.
   c. Mockups.
   d. Fabrication.
   e. Sample testing.
   f. Deliveries.
   g. Installation.
   h. Tests and inspections.
   i. Adjusting.
   j. Curing.
   k. Startup and placement into final use and operation.

4. Construction Areas: Identify each major area of construction for each element of the Work. Indicate where each construction activity within a major area must be sequenced or integrated with other construction activities.

E. Milestones: Include milestones indicated in the Contract Documents in schedule, including, but not limited to, the Notice to Proceed, Substantial Completion, and final completion, and the following interim milestones:
1. Façade Rehabilitation: Include proposed start date and completion date for each separate address.

F. Upcoming Work Summary: Prepare summary report indicating activities scheduled to occur or commence prior to submittal of next schedule update. Summarize the following issues:
1. Unresolved issues.
2. Unanswered RFIs.
3. Rejected or unreturned submittals.
4. Notations on returned submittals.

G. Recovery Schedule: When periodic update indicates the Work is 14 Insert number or more calendar days behind the current approved schedule, submit a separate recovery schedule indicating means by which Contractor intends to regain compliance with the schedule. Indicate changes to working hours, working days, crew sizes, and equipment required to achieve compliance, and date by which recovery will be accomplished.

H. Computer Scheduling Software: Prepare schedules using current version of a program that has been developed specifically to manage construction schedules.

2.2 CONTRACTOR'S CONSTRUCTION SCHEDULE (GANTT CHART)

A. Gantt-Chart Schedule: Submit a comprehensive, fully developed, horizontal Gantt-chart-type, Contractor's construction schedule within 30 days of date established for commencement of the Work. Base schedule on the initial construction schedule and additional information received at the Preconstruction Conference.

B. Preparation: Indicate each significant construction activity separately. Identify first workday of each week with a continuous vertical line.
1. For construction activities that require three months or longer to complete, indicate an estimated completion percentage in 10 percent increments within time bar.

2.3 REPORTS

A. Field Condition Reports: Immediately on discovery of a difference between field conditions and the Contract Documents, prepare and submit a detailed report. Submit with a Request for Information. Include a detailed description of the differing conditions, together with recommendations for changing the Contract Documents.

2.4 SPECIAL REPORTS

A. General: Submit special reports directly to Owner within one day(s) of an occurrence. Distribute copies of report to parties affected by the occurrence.

B. Reporting Unusual Events: When an event of an unusual and significant nature occurs at Project site, whether or not related directly to the Work, prepare and submit a special report. List chain of events, persons participating, and response by Contractor's personnel, evaluation of results or effects, and similar pertinent information. Advise Owner in advance when these events are known or predictable.

PART 3 - EXECUTION

3.1 CONTRACTOR'S CONSTRUCTION SCHEDULE

A. Contractor's Construction Schedule Updating: At monthly intervals, update schedule to reflect actual construction progress and activities. Issue schedule one week before each regularly scheduled progress meeting.
   1. Revise schedule immediately after each meeting or other activity where revisions have been recognized or made. Issue updated schedule concurrently with the report of each such meeting.
   2. As the Work progresses, indicate final completion percentage for each activity.

   NOTE: Failure to provide schedule may result in delay or rejection of the Application for Payment.

B. Distribution: Distribute copies of approved schedule to Architect Owner, separate contractors, testing and inspecting agencies, and other parties identified by Contractor with a need-to-know schedule responsibility.
   1. Post copies in Project meeting rooms and temporary field offices.
   2. When revisions are made, distribute updated schedules to the same parties and post in the same locations. Delete parties from distribution when they have completed their assigned portion of the Work and are no longer involved in performance of construction activities.

END OF SECTION 01 32 00

SECTION 01 32 33 - PHOTOGRAPHIC DOCUMENTATION

PART 1 - GENERAL

1.1 SUMMARY

A. This Section includes administrative and procedural requirements for the following:
   1. Preconstruction photographs.
   2. Periodic construction photographs.
   3. Final Completion construction photographs.

B. Related Sections include the following:
   1. Division 01 Section "Submittal Procedures" for submitting photographic documentation.
   2. Division 01 Section "Closeout Procedures" for submitting digital media as Project Record Documents at Project closeout.

1.2 SUBMITTALS

A. Construction Photographs:
   1. Digital Images: Submit a complete set of digital image electronic files with each submittal of prints on CD-ROM, DVD, or other commonly used portable storage format. Identify electronic media with date photographs were taken. Submit images that have same aspect ratio as the sensor, uncropped. Organize so that the location of the image and date that the image was taken are obvious.

1.3 USAGE RIGHTS

A. Obtain and transfer copyright usage rights from photographer to Owner for unlimited reproduction of photographic documentation.

PART 2 - PRODUCTS

2.1 PHOTOGRAPHIC MEDIA

A. Digital Images: Provide images in uncompressed TIFF or JPEG format, produced by a digital camera with minimum sensor size of 4.0 megapixels, and at an image resolution of not less than 1600 by 1200 pixels.

PART 3 - EXECUTION

3.1 CONSTRUCTION PHOTOGRAPHS

A. General: Take photographs using the maximum range of depth of field, and that are in focus, to clearly show the Work. Photographs with blurry or out-of-focus areas will not be accepted.

B. Digital Images: Submit digital images exactly as originally recorded in the digital camera, without alteration, manipulation, editing, or modifications using image-editing software.
   1. Date and Time: Include date and time in filename for each image.
   2. Field Office Images: Maintain one set of images on CD-ROM, DVD, or other commonly used portable storage format, in the field office at Project site, available at all times for reference. Identify images same as for those submitted to Architect.

C. Preconstruction Photographs: Before starting construction, take digital photographs of Project site and surrounding properties, including existing items to remain during construction, from different vantage points, as directed by Architect.
   1. Flag construction limits before taking construction photographs.
   2. Take photographs to show existing conditions adjacent to property before starting the Work.
   3. Take at least six photographs of each building address included in Façade work and of other existing buildings either on or adjoining property to accurately record physical conditions at start of construction.
   4. Take additional photographs as required to record settlement or cracking of adjacent structures, pavements, and improvements.

D. Periodic Construction Photographs:
   1. Take at least 12 digital photographs monthly, coinciding with the cutoff date associated with each Application for Payment. Select vantage points to show status of construction and progress since last photographs were taken.
   2. Take digital photographs to record concealed elements that would be difficult to identify or measure and record later for the projects record documents.

E. Final Completion Construction Photographs: Take at least six digital photographs of each building façade after date of Substantial Completion for submission as Project Record Documents.

F. Additional Photographs: Architect may issue requests for additional photographs, in addition to periodic photographs specified. Additional photographs will not be paid for by Change Order and are included in the Contract Sum.
   1. Three days' notice will be given, where feasible.
   2. In emergency situations, take additional photographs within 24 hours of request.
   3. Circumstances that could require additional photographs include, but are not limited to, the following:
      a. Special events planned at Project site.
      b. Immediate follow-up when on-site events result in construction damage or losses.
      c. Photographs to be taken at fabrication locations away from Project site. These photographs are not subject to unit prices or unit-cost allowances.
      d. Substantial Completion of a major phase or component of the Work.

END OF SECTION 01 32 33

SECTION 01 33 00 - SUBMITTAL PROCEDURES

PART 1 - GENERAL

1.1 RELATED DOCUMENTS

A. Drawings and general provisions of the Contract, including General and Supplementary Conditions and other Division 01 Specification Sections, apply to this Section.

1.2 SUMMARY

A. Section includes requirements for the submittal schedule and administrative and procedural requirements for submitting Shop Drawings, Product Data, Samples, and other submittals.

B. Related Sections:
   1. Division 01 Section "Payment Procedures" for submitting Applications for Payment and the schedule of values.
   2. Division 01 Section "Construction Progress Documentation" for submitting schedules and reports, including Contractor's construction schedule.
   3. Division 01 Section "Operation and Maintenance Data" for submitting operation and maintenance manuals.
   4. Division 01 Section "Project Record Documents" for submitting record Drawings, record Specifications, and record Product Data.

1.3 DEFINITIONS

A. Action Submittals: Written and graphic information and physical samples that require Architect's responsive action.

B. Informational Submittals: Written and graphic information and physical samples that do not require Architect's responsive action. Submittals may be rejected for not complying with requirements.

C. Portable Document Format (PDF): An open standard file format licensed by Adobe Systems used for representing documents in a device-independent and display resolution-independent fixed-layout document format.

1.4 ACTION SUBMITTALS

A. Submittal Schedule: Submit a schedule of submittals, arranged in chronological order by dates required by construction schedule. Include time required for review, ordering, manufacturing, fabrication, and delivery when establishing dates. Include additional time required for making corrections or modifications to submittals noted by the Architect and additional time for handling and reviewing submittals required by those corrections.
   1. Coordinate submittal schedule with list of subcontracts, the schedule of values, and Contractor's construction schedule.
   2. Initial Submittal: Submit concurrently with start-up construction schedule. Include submittals required during the first 60 days of construction. List those submittals required to maintain orderly progress of the Work and those required early because of long lead time for manufacture or fabrication.
   3. Final Submittal: Submit concurrently with the first complete submittal of Contractor's construction schedule.
      a. Submit revised submittal schedule to reflect changes in current status and timing for submittals.

4. Format: Arrange the following information in a tabular format:
    a. Scheduled date for first submittal.
    b. Specification Section number and title.
    c. Submittal category: Action, informational.
    d. Name of subcontractor.
    e. Description of the Work covered.
    f. Scheduled date for Architect's final release or approval.
    g. Scheduled dates for purchasing.
    h. Scheduled dates for installation.
    i. Activity or event number.

1.5 SUBMITTAL ADMINISTRATIVE REQUIREMENTS

A. Architect's Digital Data Files: At Contractor's written request, electronic copies of Architect's CADD files of the Contract Drawings will be provided by Architect for Contractor's use in preparing submittals, subject to the following conditions:
    1. Contractor shall execute a CADD/Electronic File Transfer / Use Agreement included in the Project Manual following this section.
    2. Architect makes no representations as to the accuracy or completeness of digital data drawing files as they relate to the Contract Drawings.

B. Coordination: Coordinate preparation and processing of submittals with performance of construction activities.
    1. Coordinate each submittal with fabrication, purchasing, testing, delivery, other submittals, and related activities that require sequential activity.
    2. Submit all submittal items required for each Specification Section concurrently unless partial submittals for portions of the Work are indicated on approved submittal schedule.
    3. Submit action submittals and informational submittals required by the same Specification Section as separate packages under separate transmittals.
    4. Coordinate transmittal of different types of submittals for related parts of the Work so processing will not be delayed because of need to review submittals concurrently for coordination.
        a. Architect reserves the right to withhold action on a submittal requiring coordination with other submittals until related submittals are received.

C. Processing Time: Allow time for submittal review, including time for resubmittals, as follows. Time for review shall commence on Architect's receipt of submittal. No extension of the Contract Time will be authorized because of failure to transmit submittals enough in advance of the Work to permit processing, including resubmittals.
    1. Initial Review: Allow 15 days for initial review of each submittal. Allow additional time if coordination with subsequent submittals is required. Architect will advise Contractor when a submittal being processed must be delayed for coordination.
    2. Intermediate Review: If intermediate submittal is necessary, process it in same manner as initial submittal.
    3. Resubmittal Review: Allow 15 days for review of each resubmittal.
    4. Sequential Review: Where sequential review of submittals by Architect's consultants, Owner, or other parties is indicated, allow 21 days for initial review of each submittal.
    5. Concurrent Consultant Review: Where the Contract Documents indicate that submittals may be transmitted simultaneously to Architect and to Architect's consultants, allow 15 days for review of each submittal. Submittal will be returned to Architect before being returned to Contractor.

D. Identification and Information: Place a permanent label or title block on each paper copy submittal item for identification.
    1. Indicate name of firm or entity that prepared each submittal on label or title block.

2. Provide a space approximately 6 by 8 inches on label or beside title block to record Contractor's review and approval markings and action taken by Architect.
3. Include the following information for processing and recording action taken:
    a. Project name.
    b. Date.
    c. Name of Architect.
    d. Name of Construction Manager.
    e. Name of Contractor.
    f. Name of subcontractor.
    g. Name of supplier.
    h. Name of manufacturer.
    i. Submittal number or other unique identifier, including revision identifier.
        1) Submittal number shall use Specification Section number followed by a dash and then a sequential number (e.g., 061000_01). Resubmittals shall include an alphabetic suffix after sequential number (e.g., 061000_01A).
    j. Number and title of appropriate Specification Section.
    k. Drawing number and detail references, as appropriate.
    l. Location(s) where product is to be installed, as appropriate.
    m. Other necessary identification.

E. Identification and Information: Identify and incorporate information in each electronic submittal file as follows:
1. Assemble complete submittal package into a single indexed file with links enabling navigation to each item.
2. Name file with submittal number or other unique identifier, including revision identifier.
    a. File name shall use Specification Section number followed by a dash and then a sequential number ((e.g., 061000_01). Resubmittals shall include an alphabetic suffix after sequential number (e.g., 061000_01A).
3. Provide means for insertion to permanently record Contractor's review and approval markings and action taken by Architect.
4. Include the following information on an inserted cover sheet:
    a. Project name.
    b. Date.
    c. Name and address of Architect.
    d. Name of Construction Manager.
    e. Name of Contractor.
    f. Name of firm or entity that prepared submittal.
    g. Name of subcontractor.
    h. Name of supplier.
    i. Name of manufacturer.
    j. Number and title of appropriate Specification Section.
    k. Drawing number and detail references, as appropriate.
    l. Location(s) where product is to be installed, as appropriate.
    m. Related physical samples submitted directly.
    n. Other necessary identification.
5. Include the following information as keywords in the electronic file metadata:
    a. Project name.
    b. Number and title of appropriate Specification Section.
    c. Manufacturer name.
    d. Product name.

F. Options: Identify options requiring selection by the Architect.

G. Deviations: Identify deviations from the Contract Documents on submittals.

H. Transmittal: Assemble each submittal individually and appropriately for transmittal and handling. Transmit each submittal using a transmittal form. Architect will return submittals, without review, received from sources other than Contractor.
   1. Transmittal Form: Use form acceptable to Architect.
   2. Transmittal Form: Provide locations on form for the following information:
      a. Project name.
      b. Date.
      c. Destination (To:).
      d. Source (From:).
      e. Names of subcontractor, manufacturer, and supplier.
      f. Category and type of submittal.
      g. Submittal purpose and description.
      h. Specification Section number and title.
      i. Indication of full or partial submittal.
      j. Drawing number and detail references, as appropriate.
      k. Transmittal number.
      l. Submittal and transmittal distribution record.
      m. Remarks.
      n. Signature of transmitter.
   3. On an attached separate sheet, prepared on Contractor's letterhead, record relevant information, requests for data, revisions other than those requested by Architect on previous submittals, and deviations from requirements in the Contract Documents, including minor variations and limitations. Include same identification information as related submittal.

I. Resubmittals: Make resubmittals in same form and number of copies as initial submittal.
   1. Note date and content of previous submittal.
   2. Note date and content of revision in label or title block and clearly indicate extent of revision.
   3. Resubmit submittals until they are marked with approval notation from Architect's action stamp.

J. Distribution: Furnish copies of final submittals to manufacturers, subcontractors, suppliers, fabricators, installers, authorities having jurisdiction, and others as necessary for performance of construction activities. Show distribution on transmittal forms.

K. Use for Construction: Use only final submittals that are marked with approval notation from Architect's action stamp.

PART 2 - PRODUCTS

2.1 SUBMITTAL PROCEDURES

A. General Submittal Procedure Requirements: Prepare and submit submittals required by individual Specification Sections. Types of submittals are indicated in individual Specification Sections.
   1. Submit electronic submittals as PDF electronic files directly to Architect's Info Exchange Project Website specifically established for this Project. No fee or special software other than internet access is required for access to the Info Exchange Project Website. Specific access instructions will be provided following Award of Contract.
      a. Architect will return annotated file. Annotate and retain one copy of file as an electronic Project record document file.
   2. Closeout Submittals and Maintenance Material Submittals: Comply with requirements specified in Division 01 Section "Closeout Procedures."

3. Certificates and Certifications Submittals: Provide a statement that includes signature of entity responsible for preparing certification. Certificates and certifications shall be signed by an officer or other individual authorized to sign documents on behalf of that entity.
    a. Provide a notarized statement on original paper copy certificates and certifications where indicated.
4. Test and Inspection Reports Submittals: Comply with requirements specified in Division 01 Section "Quality Requirements."

2.2 ACTION SUBMITTALS

A. Product Data: Collect information into a single submittal for each element of construction and type of product or equipment.
    1. If information must be specially prepared for submittal because standard published data are not suitable for use, submit as Shop Drawings, not as Product Data.
    2. Mark each copy of each submittal to show which products and options are applicable.
    3. Include the following information, as applicable:
        a. Manufacturer's catalog cuts.
        b. Manufacturer's product specifications.
        c. Standard color charts.
        d. Statement of compliance with specified referenced standards.
        e. Testing by recognized testing agency.
        f. Application of testing agency labels and seals.
        g. Notation of coordination requirements.
        h. Availability and delivery time information.
    4. For equipment, include the following in addition to the above, as applicable:
        a. Wiring diagrams showing factory-installed wiring.
        b. Printed performance curves.
        c. Operational range diagrams.
        d. Clearances required to other construction, if not indicated on accompanying Shop Drawings.
    5. Submit Product Data before or concurrent with Samples.
    6. Submit Product Data in the following format:
        a. PDF electronic file.

B. Shop Drawings: Prepare Project-specific information, drawn accurately to scale. Do not base Shop Drawings on reproductions of the Contract Documents or standard printed data, unless submittal based upon Architect's digital data drawing files is otherwise permitted.
    1. Preparation: Fully illustrate requirements in the Contract Documents. Include the following information, as applicable:
        a. Identification of products.
        b. Schedules.
        c. Compliance with specified standards.
        d. Notation of coordination requirements.
        e. Notation of dimensions established by field measurement.
        f. Relationship and attachment to adjoining construction clearly indicated.
        g. Seal and signature of professional engineer if specified.
    2. Sheet Size: Except for templates, patterns, and similar full-size drawings, submit Shop Drawings on sheets at least 8-1/2 by 11 inches but no larger than 24 by 36 inches.
    3. Submit Shop Drawings in the following format:
        a. PDF electronic file.

C. Samples: Submit Samples for review of kind, color, pattern, and texture for a check of these characteristics with other elements and for a comparison of these characteristics between submittal and actual component as delivered and installed.

1. Transmit Samples that contain multiple, related components such as accessories together in one submittal package.
2. Identification: Attach label on unexposed side of Samples that includes the following:
   a. Generic description of Sample.
   b. Product name and name of manufacturer.
   c. Sample source.
   d. Number and title of applicable Specification Section.
3. Disposition: Maintain sets of approved Samples at Project site, available for quality-control comparisons throughout the course of construction activity. Sample sets may be used to determine final acceptance of construction associated with each set.
   a. Samples that may be incorporated into the Work are indicated in individual Specification Sections. Such Samples must be in an undamaged condition at time of use.
   b. Samples not incorporated into the Work, or otherwise designated as Owner's property, are the property of Contractor.
4. Samples for Initial Selection: Submit manufacturer's color charts consisting of units or sections of units showing the full range of colors, textures, and patterns available.
   a. Number of Samples: Submit one full set(s) of available choices where color, pattern, texture, or similar characteristics are required to be selected from manufacturer's product line. Architect will return submittal with options selected.
5. Samples for Verification: Submit full-size units or Samples of size indicated, prepared from same material to be used for the Work, cured and finished in manner specified, and physically identical with material or product proposed for use, and that show full range of color and texture variations expected. Samples include, but are not limited to, the following: partial sections of manufactured or fabricated components; small cuts or containers of materials; complete units of repetitively used materials; swatches showing color, texture, and pattern; color range sets; and components used for independent testing and inspection.
   a. Number of Samples: Submit three sets of Samples. Architect will retain one Sample sets; remainder will be returned. Mark up and retain one returned Sample set as a Project record sample.
      1) Submit a single Sample where assembly details, workmanship, fabrication techniques, connections, operation, and other similar characteristics are to be demonstrated.
      2) If variation in color, pattern, texture, or other characteristic is inherent in material or product represented by a Sample, submit at least three sets of paired units that show approximate limits of variations.

A. Submittals Schedule: Comply with requirements specified in Division 01 Section "Construction Progress Documentation."

B. Application for Payment: Comply with requirements specified in Division 01 Section "Payment Procedures."

C. Schedule of Values: Comply with requirements specified in Division 01 Section "Payment Procedures."

D. Subcontract List: Prepare a written summary identifying individuals or firms proposed for each portion of the Work, including those who are to furnish products or equipment fabricated to a special design. Include the following information in tabular form:
   1. Name, address, and telephone number of entity performing subcontract or supplying products.
   2. Number and title of related Specification Section(s) covered by subcontract.
   3. Drawing number and detail references, as appropriate, covered by subcontract.
   4. Submit subcontract list in the following format:

a. PDF electronic file.

2.3 INFORMATIONAL SUBMITTALS

A. Product Schedule: As required in individual Specification Sections, prepare a written summary indicating types of products required for the Work and their intended location. Include the following information in tabular form:
1. Type of product. Include unique identifier for each product indicated in the Contract Documents.
2. Manufacturer and product name, and model number if applicable.
3. Number and name of room or space.
4. Location within room or space.
5. Submit product schedule in the following format:
   a. PDF electronic file.

B. Contractor's Construction Schedule: Comply with requirements specified in Division 01 Section "Construction Progress Documentation."

C. Coordination Drawings: Comply with requirements specified in Division 01 Section "Project Management and Coordination."

D. Qualification Data: Prepare written information that demonstrates capabilities and experience of firm or person. Include lists of completed projects with project names and addresses, contact information of architects and owners, and other information specified.

E. Welding Certificates: Prepare written certification that welding procedures and personnel comply with requirements in the Contract Documents. Submit record of Welding Procedure Specification and Procedure Qualification Record on American Welding Society (AWS) forms. Include names of firms and personnel certified.

F. Installer Certificates: Submit written statements on manufacturer's letterhead certifying that Installer complies with requirements in the Contract Documents and, where required, is authorized by manufacturer for this specific Project.

G. Manufacturer Certificates: Submit written statements on manufacturer's letterhead certifying that manufacturer complies with requirements in the Contract Documents. Include evidence of manufacturing experience where required.

H. Product Certificates: Submit written statements on manufacturer's letterhead certifying that product complies with requirements in the Contract Documents.

I. Material Certificates: Submit written statements on manufacturer's letterhead certifying that material complies with requirements in the Contract Documents.

J. Material Test Reports: Submit reports written by a qualified testing agency, on testing agency's standard form, indicating and interpreting test results of material for compliance with requirements in the Contract Documents.

K. Product Test Reports: Submit written reports indicating current product produced by manufacturer complies with requirements in the Contract Documents. Base reports on evaluation of tests performed by manufacturer and witnessed by a qualified testing agency, or on comprehensive tests performed by a qualified testing agency.

L. Research Reports: Submit written evidence, from a model code organization acceptable to authorities having jurisdiction, that product complies with building code in effect for Project. Include the following information:
   1. Name of evaluation organization.
   2. Date of evaluation.
   3. Time period when report is in effect.
   4. Product and manufacturers' names.
   5. Description of product.
   6. Test procedures and results.
   7. Limitations of use.

M. Schedule of Tests and Inspections: Comply with requirements specified in Division 01 Section "Quality Requirements."

N. Preconstruction Test Reports: Submit reports written by a qualified testing agency, on testing agency's standard form, indicating and interpreting results of tests performed before installation of product, for compliance with performance requirements in the Contract Documents.

O. Compatibility Test Reports: Submit reports written by a qualified testing agency, on testing agency's standard form, indicating and interpreting results of compatibility tests performed before installation of product. Include written recommendations for primers and substrate preparation needed for adhesion.

P. Field Test Reports: Submit reports indicating and interpreting results of field tests performed either during installation of product or after product is installed in its final location, for compliance with requirements in the Contract Documents.

Q. Maintenance Data: Comply with requirements specified in Division 01 Section "Operation and Maintenance Data."

R. Design Data: Prepare and submit written and graphic information, including, but not limited to, performance and design criteria, list of applicable codes and regulations, and calculations. Include list of assumptions and other performance and design criteria and a summary of loads. Include load diagrams if applicable. Provide name and version of software, if any, used for calculations. Include page numbers.

S. Construction Photographs: Comply with requirements specified in Division 01 Section “Photographic Documentation."

T. Material Safety Data Sheets (MSDSs): Submit information directly to Owner, if requested by Owner; do not submit to Architect.

2.4 DELEGATED-DESIGN SERVICES

A. Performance and Design Criteria: Where professional design services or certifications by a design professional are specifically required of Contractor by the Contract Documents, provide products and systems complying with specific performance and design criteria indicated.
   1. If criteria indicated are not sufficient to perform services or certification required, submit a written request for additional information to Architect.

B. Delegated-Design Services Certification: In addition to Shop Drawings, Product Data, and other required submittals, submit PDF electronic file and three paper copies of certificate, signed and sealed by the responsible design professional, for each product and system specifically assigned to Contractor to be designed or certified by a design professional.

1. Indicate that products and systems comply with performance and design criteria in the Contract Documents. Include list of codes, loads, and other factors used in performing these services.

PART 3 - EXECUTION

3.1 CONTRACTOR'S REVIEW

A. Action and Informational Submittals: Review each submittal and check for coordination with other Work of the Contract and for compliance with the Contract Documents. Note corrections and field dimensions. Mark with approval stamp before submitting to Architect.

B. Project Closeout and Maintenance/Material Submittals: Refer to requirements in Division 01 Section "Closeout Procedures."

C. Approval Stamp: Stamp each submittal with a uniform, approval stamp. Include Project name and location, submittal number, Specification Section title and number, name of reviewer, date of Contractor's approval, and statement certifying that submittal has been reviewed, checked, and approved for compliance with the Contract Documents.

3.2 ARCHITECT'S ACTION

A. General: Architect will not review submittals that do not bear Contractor's approval stamp and will return them without action.

B. Action Submittals: Architect will review each submittal, make marks to indicate corrections or modifications required, and return it. Architect will stamp each submittal with an action stamp and will mark stamp appropriately to indicate action, as follows:
   1. Final Unrestricted Release: Where submittals are marked “Approved”, "No Exception Taken", or "Reviewed" that part of the Work covered by the submittal may proceed provided it complies with requirements of the Contract Documents; final acceptance will depend upon that compliance.
   2. Final-But-Restricted Release: When submittals are marked “Approved as Noted” or "Make Corrections Noted" that part of the Work covered by the submittal may proceed provided it complies with notations or corrections on the submittal and requirements of the Contract Documents; final acceptance will depend upon that compliance.
   3. Returned for Resubmittal: When submittal is marked “Not Approved”, "Revise and Resubmit" or "Rejected" or “Submit Specified Item” do not proceed with that part of the Work covered by the submittal, including purchasing, fabrication, delivery, or other activity. Revise or prepare a new submittal in accordance with the notations; resubmit without delay. Repeat if necessary until an approval status is obtained that permits the Work to proceed.
      a. Do not permit submittals returned for resubmittal to be used at the Project site, or elsewhere where Work is in progress. Submittals which have not been reviewed may not be used to construct the Work.

C. Informational Submittals: Architect will review each submittal and will not return it, or will return it if it does not comply with requirements. Architect will forward each submittal to appropriate party.

D. Partial submittals prepared for a portion of the Work will be reviewed when use of partial submittals has received prior approval from Architect.

E. Incomplete submittals are not acceptable, will be considered nonresponsive, and will be returned without review.

F. Unsolicited Submittals: Architect may discard submittals not required by the Contract Documents without any review or action.

END OF SECTION 01 33 00

CADD/Electronic File Transfer / Use Agreement

Date:

Project Name:

Project No.: **File No.:**

Dear (Contractor Name):

At your request, we will provide electronic files for your convenience and use in establishing earthwork quantities, project layout or in the preparation of shop drawings related to the above noted project, subject to the following terms and conditions:

Our electronic files are compatible with: (software/hardware specifications). RDG makes no representation as to the compatibility of these files with your hardware or your software beyond the specified release of the referenced specifications.

Data contained in these electronic files, at the time of transfer, are part of RDG's instruments of service and shall not be used by you or anyone else receiving this data through or from you for any purpose other than as a convenience in establishing earthwork quantities or in the preparation of shop drawings for the referenced project. Any other use or reuse by you or by others is prohibited. You agree to make no claim and hereby waive, to the fullest extent permitted by law, any claim or cause of action or any nature against RDG officers, directors, employees, agents and sub-consultants of RDG that may arise out of or in connection you're your use of these electronic files. Furthermore, you shall, to the fullest extent permitted by law, indemnify and hold RDG, or officers, directors, employees, agents and sub-consultants of RDG harmless against all damages, liabilities or costs, including reasonable attorneys' fees and defense costs, arising out of or resulting from your use of these electronic files.

These electronic files are not contract documents, nor do they contain changes occurring after issuance of the bidding documents. Differences may exist between these electronic files and corresponding hard-copy contract documents or any subsequent changes to them. Revisions issued by addenda prior to bidding may or may not be represented on these files. We make no representation regarding the accuracy or completeness of the electronic files you receive. In the event that a conflict arises between the hard-copy contract documents, including subsequent changes, and the electronic files, the contract documents shall govern. You are responsible for determining if any conflict exists and make any updates necessary to correct conflicts and make the files current with subsequent changes. By your use of these electronic files, you are not relieved of your duty to fully comply with the contract documents, including, and without limitation, the need to check, confirm and coordinate all dimensions and details, take field measurements, verify field conditions and coordinate your work with that of other contractors for the project. All elements of these drawings may not be drawn to the scale indicated. If used to determine dimensions, layout or quantities, the user shall verify drawings correspond to noted dimensions and verify scale.

Because information presented on the electronic files can be modified, unintentionally or otherwise, we reserve the right to remove all indicia of ownership and/or involvement from each electronic display.

We will furnish you electronic files of the following drawing sheets [ ] with [ ] without addendums posted:

Drawing Number	Drawing Date		Drawing Number	Drawing Date		Drawing Number	Drawing Date		Drawing Number	Drawing Date

Prior to delivery: This agreement shall be signed and submitted.

Under no circumstances shall delivery of the electronic files for use by you be deemed a sale by us, and we make no warranties, either express or implied, of merchantability and fitness for any particular purpose. In no event shall we be liable for any loss of profit or any consequential damages as a result of your use or reuse of these electronic files.

Issued By (Name) Contractor Signature Title

RDG Planning & Design
301 Grand Avenue
Des Moines, IA 50309-1718

Contractor Company Name

SAMPLE

SECTION 01 35 91 - HISTORIC TREATMENT PROCEDURES

PART 1 - GENERAL

1.1 SUMMARY

A. Section includes general protection and treatment procedures for the entire Project and the following specific work:
   1. Historic removal and dismantling.

1.2 DEFINITIONS

A. Consolidate: To strengthen loose or deteriorated materials in place.

B. Design Reference Sample: A sample that represents the Architect's pre-bid selection of work to be matched; it may be existing work or work specially produced for the Project.

C. Dismantle: To disassemble and detach items by hand from existing construction to the limits indicated, using small hand tools and small one-hand power tools, to protect nearby historic surfaces; and legally dispose of dismantled items off-site, unless indicated to be salvaged or reinstalled.

D. Existing to Remain: Existing items that are not to be removed or dismantled.

E. Historic: Spaces, areas, rooms, surfaces, materials, finishes, and overall appearance which are important to the successful preservation, rehabilitation, restoration, and reconstruction as determined by the Architect.

F. Match: To blend with adjacent construction and manifest no apparent difference in material type, species, cut, form, detail, color, grain, texture, or finish; as approved by the Architect.

G. Reconstruct: To remove existing item, replicate damaged or missing components, and reinstall in original position.

H. Refinish: To remove existing finishes to base material and apply new finish to match original, or as otherwise indicated.

I. Reinstall: To protect removed or dismantled item, repair and clean it as indicated for reuse, and reinstall it in original position, or where indicated.

J. Remove: Specifically for historic spaces, areas, rooms, and surfaces, the term means to detach an item from existing construction to the limits indicated, using hand tools and hand-operated power equipment, and legally dispose of it off-site, unless indicated to be salvaged or reinstalled.

K. Repair: To correct damage and defects, retaining existing materials, features, and finishes while employing as little new material as possible. Includes patching, piecing-in, splicing, consolidating, or otherwise reinforcing or upgrading materials.

L. Replace: To remove, duplicate, and reinstall entire item with new material. The original item is the pattern for creating duplicates unless otherwise indicated.

M. Replicate: To reproduce in exact detail, materials, and finish, unless otherwise indicated.

N. Reproduce: To fabricate a new item, accurate in detail to the original, and in either the same or a similar material as the original, unless otherwise indicated.

O. Restore: To consolidate, replicate, reproduce, repair, and refinish as required to achieve the indicated results.

P. Retain: To keep existing items that are not to be removed or dismantled.

Q. Reversible: New construction work, treatments, or processes that can be removed or undone in the future without damaging historic materials, unless otherwise indicated.

R. Salvage: To protect removed or dismantled items and deliver them to Owner.

S. Stabilize: To provide structural reinforcement of unsafe or deteriorated items while maintaining the essential form as it exists at present; also, to reestablish a weather-resistant enclosure.

T. Strip: To remove existing finish down to base material, unless otherwise indicated.

1.3 COORDINATION

A. Historic Treatment Sub-schedule: A construction schedule coordinating the sequencing and scheduling of historic treatment work for entire Project, including each activity to be performed in historic spaces, areas, and rooms, and on historic surfaces; and based on Contractor's Construction Schedule. Secure time commitments for performing critical construction activities from separate entities responsible for historic treatment work.
   1. Schedule construction operations in sequence required to obtain best historic treatment results.
   2. Coordinate sequence of historic treatment work activities to accommodate the following:
      a. Owner's continuing occupancy of portions of existing building.
      b. Owner's partial occupancy of completed Work.
      c. Other known work in progress.
      d. Tests and inspections.
   3. Detail sequence of historic treatment work, with start and end dates.
   4. Utility Services: Indicate how long utility services will be interrupted. Coordinate shutoff, capping, and continuation of utility services.
   5. Use of elevator and stairs.
   6. Equipment Data: List gross loaded weight, axle-load distribution, and wheel-base dimension data for mobile and heavy equipment proposed for use. Do not use such equipment without certification from Contractor's professional engineer that the structure can support the imposed loadings without damage.

B. Public Circulation: Coordinate historic treatment work with public circulation patterns at Project site. Some work is near public circulation patterns. Public circulation patterns cannot be closed off entirely, and in places can be only temporarily redirected around small areas of work. Plan and execute the Work accordingly.

1.4 PROJECT MEETINGS FOR HISTORIC TREATMENT

A. Preliminary Historic Treatment Conference: Before starting historic treatment work, conduct conference at Project site.
   1. Contractor shall conduct meetings and record meeting results.
   2. Attendees: In addition to representatives of Owner, Architect, and Contractor, testing service representative, historic treatment specialists, chemical-cleaner manufacturer, and installers whose work interfaces with or affects historic treatment shall be represented at the meeting.

3. Agenda: Discuss items of significance that could affect progress of historic treatment work, including review of the following:
    a. Historic Treatment Sub-schedule: Discuss and finalize; verify availability of materials, historic treatment specialists' personnel, equipment, and facilities needed to make progress and avoid delays.
    b. Fire-prevention plan.
    c. Governing regulations.
    d. Areas where existing construction is to remain and the required protection.
    e. Hauling routes.
    f. Sequence of historic treatment work operations.
    g. Storage, protection, and accounting for salvaged and specially fabricated items.
    h. Existing conditions, staging, and structural loading limitations of areas where materials are stored.
    i. Qualifications of personnel assigned to historic treatment work and assigned duties.
    j. Requirements for extent and quality of work, tolerances, and required clearances.
    k. Methods and procedures related to historic treatments, including product manufacturers' written instructions and precautions regarding historic treatment procedures and their effects on materials, components, and vegetation.
    l. Embedded work such as flashings and lintels, special details, collection of wastes, protection of occupants and the public, and condition of other construction that affect the Work or will affect the work.
4. Reporting: Record conference results and distribute copies to everyone in attendance and to others affected by decisions or actions resulting from conference.

B. Coordination Meetings: Conduct coordination meetings specifically for historic treatment work at monthly intervals. Coordination meetings are in addition to specific meetings held for other purposes, such as progress meetings and pre-installation conferences.
1. Contractor shall conduct meetings and record meeting results.
2. Attendees: In addition to representatives of Owner, Architect, and Contractor, each historic treatment specialist, supplier, installer, and other entity concerned with progress or involved in planning, coordination, or performance of historic treatment work activities shall be represented at these meetings. All participants at conference shall be familiar with Project and authorized to conclude matters relating to historic treatment work.
3. Agenda: Review and correct or approve minutes of previous coordination meeting. Review other items of significance that could affect progress of historic treatment work. Include topics for discussion as appropriate to status of Project.
    a. Historic Treatment Sub-schedule: Review progress since last coordination meeting. Determine whether each schedule item is on time, ahead of schedule, or behind schedule. Determine how construction behind schedule will be expedited with retention of quality; secure commitments from parties involved to do so. Discuss whether schedule revisions are required to ensure that current and subsequent activities are completed within the Contract Time.
    b. Schedule Updating: Revise Contractor's Historic Treatment Sub-schedule after each coordination meeting where revisions to schedule have been made or recognized. Issue revised schedule concurrently with report of each meeting.
    c. Review present and future needs of each entity present, including review items listed in the "Preliminary Historic Treatment Conference" Paragraph above and the following:
        1) Interface requirements of historic treatment work with other Project Work.
        2) Status of submittals for historic treatment work.
        3) Access to historic treatment work.
        4) Effectiveness of fire-prevention plan.
        5) Quality and work standards of historic treatment work.
        6) Change Orders for historic treatment work.

4. Reporting: Record meeting results and distribute copies to everyone in attendance and to others affected by decisions or actions resulting from each meeting.

1.5 MATERIALS OWNERSHIP

A. Unless otherwise indicated, demolition waste becomes property of Contractor.

B. Historic items, relics, and similar objects including, but not limited to, cornerstones and their contents, commemorative plaques and tablets, antiques, and other items of interest or value to Owner that may be encountered during removal and dismantling work remain Owner's property. Carefully dismantle and salvage each item or object.

1.6 SUBMITTALS

A. Historic Treatment Sub-schedule:
   1. Submit historic treatment sub-schedule within seven days of date established for commencement of historic treatment work.

B. Preconstruction Documentation: Show preexisting conditions of adjoining construction and site improvements, including finish surfaces, that might be misconstrued as damage caused by historic treatment operations.

C. Proposed Protection Measures: Submit report, including drawings, that indicates the measures proposed for protecting individuals and property, for environmental protection, for dust control and, for noise control. Indicate proposed locations and construction of barriers.

D. Schedule of Selective Demolition Activities: Indicate the following:
   1. Detailed sequence of selective demolition and removal work, with starting and ending dates for each activity. Ensure Owner's tenants' on-site operations are uninterrupted.
   2. Interruption of utility services. Indicate how long utility services will be interrupted.
   3. Coordination for shutoff, capping, and continuation of utility services.
   4. Use of elevator and stairs.
   5. Coordination of Owner's continuing occupancy of portions of existing building and of Owner's partial occupancy of completed Work.

E. Historic Treatment Program: Submit 30 days before work begins.

F. Fire-Prevention Plan: Submit 30 days before work begins.

G. Inventory of Salvaged Items: After removal or dismantling work is complete, submit a list of items that have been salvaged.

H. Predemolition Photographs or Video: Submit before Work begins.

1.7 QUALITY ASSURANCE

A. Historic Treatment Program: The historic treatment program shall follow historic guidelines established by the Secretary of the Interior and Standards for the Treatment of Historic Properties.
   1. Prepare a written plan for historic treatment for the whole Project, including each phase or process and protection of surrounding materials during operations. Describe in detail materials, methods, and equipment to be used for each activity of work. Show compliance with indicated methods and procedures specified in this and other sections.

2. Dust and Noise Control: Include locations of proposed temporary dust- and noise-control partitions and means of egress from occupied areas coordinated with continuing on-site operations and other known work in progress.
3. Debris Hauling: Include plans clearly marked to show debris hauling routes, turning radii, and locations and details of temporary protective barriers.

B. Fire-Prevention Plan: Prepare a written plan for preventing fires during the Work, including placement of fire extinguishers, fire blankets, rag buckets, and other fire-prevention devices during each phase or process. Coordinate plan with Owner's fire-protection equipment and requirements. Include each fire watch's training, duties, and authority to enforce fire safety.

C. Mockups: Prepare mockups of specific historic treatment procedures specified in this Section to demonstrate aesthetic effects and set quality standards for materials and execution.
1. Approval of mockups does not constitute approval of deviations from the Contract Documents contained in mockups unless Architect specifically approves such deviations in writing.

D. Regulatory Requirements: Comply with governing EPA notification regulations before beginning removal and dismantling work. Comply with hauling and disposal regulations of authorities having jurisdiction.

E. Historic Treatment Preconstruction Conference: Conduct conference at Project site.
1. General: Review methods and procedures related to historic treatment including, but not limited to, the following:
a. Review manufacturer's written instructions for precautions and effects of historic treatment procedures on materials, components, and vegetation.
b. Review and finalize historic treatment construction schedule; verify availability of materials, equipment, and facilities needed to make progress and avoid delays.
c. Review qualifications of personnel assigned to the work and assign duties.
d. Review material application, work sequencing, tolerances, and required clearances.
e. Review areas where existing construction is to remain and requires protection.
2. Removal and Dismantling:
a. Inspect and discuss condition of construction to be removed or dismantled.
b. Review requirements of other work that relies on substrates exposed by removal and dismantling work.

1.8 STORAGE AND PROTECTION OF HISTORIC MATERIALS

A. Salvaged Historic Materials:
1. Clean only loose debris from salvaged historic items unless more extensive cleaning is indicated.
2. Pack or crate items after cleaning; cushion against damage during handling. Label contents of containers.
3. Store items in a secure area until delivery to Owner.
4. Transport items to Owner's storage area indicated on Drawings.
5. Protect items from damage during transport and storage.

B. Historic Materials for Reinstallation:
1. Repair and clean historic items as indicated and to functional condition for reuse.
2. Pack or crate items after cleaning and repairing; cushion against damage during handling. Label contents of containers.
3. Protect items from damage during transport and storage.

4. Reinstall items in locations indicated. Comply with installation requirements for new materials and equipment unless otherwise indicated. Provide connections, supports, and miscellaneous materials to make item functional for use indicated.

C. Existing Historic Materials to Remain: Protect construction indicated to remain against damage and soiling from construction work. Where permitted by Architect, items may be dismantled and taken to a suitable, protected storage location during construction work and reinstalled in their original locations after historic treatment and construction work in the vicinity is complete.

D. Storage and Protection: When taken from their existing locations, catalog and store historic items within a weathertight enclosure where they are protected from wetting by rain, snow, condensation, or ground water, and from freezing temperatures.
   1. Identify each item with a nonpermanent mark to document its original location. Indicate original locations on plans elevations, sections, or photographs by annotating the identifying marks.
   2. Secure stored materials to protect from theft.

1.9 PROJECT CONDITIONS

A. General Size Limitation in Historic Spaces: Materials, products, and equipment used for performing the Work and for transporting debris, materials, and products shall be of sizes that clear surfaces within historic spaces, areas, rooms, and openings, including temporary protection, by 12 inches or more.

B. Owner will occupy portions of building immediately adjacent to selective demolition area. Conduct selective demolition so Owner's operations will not be disrupted.

C. Conditions existing at time of inspection for bidding purpose will be maintained by Owner as far as practical.

D. Notify Architect of discrepancies between existing conditions and Drawings before proceeding with removal and dismantling work.

E. Storage or sale of removed or dismantled items on-site is not permitted unless otherwise indicated.

1.10 HAZARDOUS MATERIALS

A. If materials suspected of containing hazardous materials are encountered, do not disturb; immediately notify Architect and Owner. Owner will remove hazardous materials under a separate contract, unless otherwise noted.

B. Asbestos: Existing glazing putty or other materials may contain asbestos, lead or other hazardous components.
   1. In the case of asbestos, stop work in the area of potential hazard, shut off fans and other air-handlers ventilating the area, and rope off area until the questionable material is identified. Re-assign workers to continue work in unaffected areas.
   2. Contractor shall notify the owner of materials suspected to contain asbestos.
   3. Owner will have materials tested.
   4. Owner will have materials shown to have asbestos removed.
   5. Resume work in the area of concern after safe working conditions are verified.

C. Lead-Based Paint: Lead-based paint may be present on interior and exterior painted surfaces of the buildings. Renovation activities may result in exposure to lead.

1. Reference the U.S. Department of the Interior, National Park Service Preservation Briefs #37 Appropriate Methods for Reducing Lead-Paint Hazards in Historic Housing at http://www.nps.gov/hps/tps/briefs/brief37.htm.
2. Perform removal and abatement of lead-containing materials and lead-based paint, and all renovation work affected by the presence of lead-containing materials and lead-based paint, in compliance with state and Federal Occupational Safety and Health Administration (OSHA) requirements.
3. Sanding, stripping and refinishing operations on surfaces containing lead paint shall be performed in accordance with all regulatory rules and standards, including OSHA's Lead Standard for the Construction Industry (29 CFR 1926.62).
4. Contractors, Sub-contractors, or employees that disturb lead based paint shall be certified by the Iowa Department of Public Health as a Lead Safe Renovator, Lead Abatement Worker, or Lead Abatement Contractor.
5. Each firm conducting activities that disturb painted surfaces shall be a "Lead-Safe Certified Firm" according to 40 CFR 745, Subpart E, and use only workers that are trained in lead-safe work practices. (Title X requirement).
6. Legal disposal of lead-based paint waste is the responsibility of the contractor.
7. No lead-based paint abatement program will be performed by the Owner.

PART 2 - PRODUCTS - (Not Used)

PART 3 - EXECUTION

3.1 EXAMINATION

A. Preparation for Removal and Dismantling: Examine construction to be removed or dismantled to determine best methods to safely and effectively perform removal and dismantling work. Examine adjacent work to determine what protective measures will be necessary. Make explorations, probes, and inquiries as necessary to determine condition of construction to be removed or dismantled and location of utilities and services to remain that may be hidden by construction that is to be removed or dismantled.
   1. Verify that affected utilities have been disconnected and capped.
   2. Inventory and record the condition of items to be removed and dismantled for reinstallation or salvage.
   3. Before removal or dismantling of existing building elements that will be reproduced or duplicated in final Work, make permanent record of measurements, materials, and construction details required to make exact reproduction.
   4. Engage a professional engineer to survey condition of building to determine whether removing any element might result in structural deficiency or unplanned collapse of any portion of structure or adjacent structures as a result of removal and dismantling work.

B. Survey of Existing Conditions: Record existing conditions by use of preconstruction photographs.
   1. Comply with requirements specified in Division 01 Section "Photographic Documentation."

C. Perform surveys as the Work progresses to detect hazards resulting from historic treatment procedures.

3.2 UTILITY SERVICES AND MECHANICAL/ELECTRICAL SYSTEMS

A. Existing Services/Systems to Remain: Maintain services/systems indicated to remain and protect them against damage.
   1. Comply with requirements for existing services/systems interruptions specified in Section 01 10 00 "Summary."

B. Existing Services/Systems to Be Removed, Relocated, or Abandoned: Locate, identify, disconnect, and seal or cap off indicated utility services and mechanical/electrical systems serving areas to be selectively demolished.
   1. Arrange to shut off indicated utilities with utility companies.
   2. If services/systems are required to be removed, relocated, or abandoned, provide temporary services/systems that bypass area of selective demolition and that maintain continuity of services/systems to other parts of building.
   3. Disconnect, demolish, and remove fire-suppression systems, plumbing, and HVAC systems, equipment, and components indicated to be removed.
      a. Piping to Be Removed: Remove portion of piping indicated to be removed and cap or plug remaining piping with same or compatible piping material.
      b. Piping to Be Abandoned in Place: Drain piping and cap or plug piping with same or compatible piping material.
      c. Equipment to Be Removed: Disconnect and cap services and remove equipment.
      d. Equipment to Be Removed and Reinstalled: Disconnect and cap services and remove, clean, and store equipment; when appropriate, reinstall, reconnect, and make equipment operational.
      e. Equipment to Be Removed and Salvaged: Disconnect and cap services and remove equipment and deliver to Owner.
      f. Ducts to Be Removed: Remove portion of ducts indicated to be removed and plug remaining ducts with same or compatible ductwork material.
      g. Ducts to Be Abandoned in Place: Cap or plug ducts with same or compatible ductwork material.

3.3 PROTECTION, GENERAL

A. Ensure that supervisory personnel are on-site and on duty when historic treatment work begins and during its progress.

B. Protect persons, motor vehicles, surrounding surfaces of building, building site, plants, and surrounding buildings from harm resulting from historic treatment procedures.
   1. Use only proven protection methods, appropriate to each area and surface being protected.
   2. Provide temporary barricades, barriers, and directional signage to exclude the public from areas where historic treatment work is being performed.
   3. Erect temporary barriers to form and maintain fire-egress routes.
   4. Erect temporary protective covers over walkways and at points of pedestrian and vehicular entrance and exit that must remain in service during historic treatment work.
   5. Contain dust and debris generated by historic treatment work, and prevent it from reaching the public or adjacent surfaces.
   6. Provide shoring, bracing, and supports as necessary. Do not overload structural elements.
   7. Protect floors and other surfaces along hauling routes from damage, wear, and staining.

C. Temporary Protection of Historic Materials:
   1. Protect existing historic materials with temporary protections and construction. Do not deface or remove existing materials.
   2. Do not attach temporary protection to historic surfaces except as indicated as part of the historic treatment program and approved by Architect.

D. Comply with each product manufacturer's written instructions for protections and precautions. Protect against adverse effects of products and procedures on people and adjacent materials, components, and vegetation.

E. Utility and Communications Services:

1. Notify the Owner, Architect, and authorities having jurisdiction, owning or controlling wires, conduits, pipes, and other services affected by the historic treatment work before commencing operations.
2. Disconnect and cap pipes and services as required by authorities having jurisdiction, as required for the historic treatment work.
3. Maintain existing services unless otherwise indicated; keep in service, and protect against damage during operations. Provide temporary services during interruptions to existing utilities.

F. Existing Drains: Prior to the start of work in an area, test drainage system to ensure that it is functioning properly. Notify Architect immediately of inadequate drainage or blockage. Do not begin work in an area until the drainage system is in working order.
1. Prevent solids such as stone or mortar residue from entering the drainage system. Clean out drains and drain lines that become sluggish or blocked by sand or other materials resulting from historic treatment work.
2. Protect drains from pollutants. Block drains or filter out sediments, allowing only clean water to pass.

3.4 PROTECTION DURING APPLICATION OF CHEMICALS

A. Protect motor vehicles, surrounding surfaces of building being restored, building site, plants, and surrounding buildings from harm or damage resulting from applications of chemical cleaners and paint removers.

B. Cover adjacent surfaces with protective materials that are proven to resist chemicals selected for Project unless chemicals being used will not damage adjacent surfaces as indicated in historic treatment program. Use covering materials and masking agents that are waterproof, UV-resistant, and will not stain or leave residue on surfaces to which they are applied. Apply protective materials according to manufacturer's written instructions. Do not apply liquid masking agents or adhesives to painted or porous surfaces. When no longer needed, promptly remove protective materials staining.

C. Do not apply chemicals during winds of sufficient force to spread them to unprotected surfaces.

D. Neutralize and collect alkaline and acid wastes and legally dispose of off Owner's property.

E. Collect and dispose of runoff from chemical operations by legal means and in a manner that prevents soil contamination, soil erosion, undermining of paving and foundations, damage to landscaping, or water penetration into building interior.

3.5 PROTECTION FROM FIRE

A. General: Follow fire-prevention plan and the following.
1. Comply with NFPA 241 requirements unless otherwise indicated.
2. Remove and keep area free of combustibles including, rubbish, paper, waste, and chemicals, except to the degree necessary for the immediate work.
   a. If combustible material cannot be removed, provide fire blankets to cover such materials.
3. Prohibit smoking by all persons within the Project work and staging areas.

B. Heat-Generating Equipment and Combustible Materials: Comply with the following procedures while performing work with heat-generating equipment or highly combustible materials, including welding, torch-cutting, soldering, brazing, paint removal with heat, or other operations where open flames or implements utilizing high heat or combustible solvents and chemicals are anticipated.

1. Obtain Owner's approval for operations involving use of open-flame or welding or other high-heat equipment.
2. As far as practical, restrict heat-generating equipment to shop areas or outside the building.
3. Do not perform work with heat-generating equipment in or near rooms or in areas where flammable liquids or explosive vapors are present or thought to be present. Use a combustible gas indicator test to ensure that the area is safe.
4. Use fireproof baffles to prevent flames, sparks, hot gasses, or other high-temperature material from reaching surrounding combustible material.
5. Prevent the spread of sparks and particles of hot metal through open windows, doors, holes, and cracks in floors, walls, ceilings, roofs, and other openings.
6. Fire Watch: Before working with heat-generating equipment or highly combustible materials, station personnel to serve as a fire watch at each location where such work is performed. Fire watch personnel shall have the authority to enforce fire safety. Station fire watch according to NFPA 51B, NFPA 241, and as follows.
    a. Train each fire watch in the proper operation of fire-control equipment and alarms.
    b. Prohibit fire-watch personnel from other work that would be a distraction from fire-watch duties.
    c. Cease work with heat-generating equipment whenever fire-watch personnel are not present.
    d. Have fire watch perform final fire-safety inspection each day beginning no sooner than 30 minutes after conclusion of work at each area of the Project site to detect hidden or smoldering fires and to ensure that proper fire-prevention is maintained.
    e. Maintain fire-watch personnel at each area of the Project site until 60 minutes after conclusion of daily work.

C. Fire Extinguishers, Fire Blankets, and Rag Buckets: Maintain fire extinguishers, fire blankets, and rag buckets for disposal of rags with combustible liquids. Maintain each as suitable for the type of fire risk in each work area. Ensure that nearby personnel and the fire watch are trained in fire-extinguisher and blanket operation.

3.6 GENERAL HISTORIC TREATMENT

A. Have historic treatment work performed only by qualified historic treatment specialists.

B. Ensure that supervisory personnel are present when historic treatment work begins and during its progress.

C. Record existing work before each procedure (preconstruction), and record progress during the work. Use digital preconstruction documentation photographs. Comply with requirements in Section 01 32 33 "Photographic Documentation."

D. Perform surveys of Project Site as the Work progresses to detect hazards resulting from historic treatment procedures.

E. Follow the procedures in subparagraphs below and procedures approved in historic treatment program unless otherwise indicated:
1. Retain as much existing material as possible; repair and consolidate rather than replace.
2. Use additional material or structure to reinforce, strengthen, prop, tie, and support existing material or structure.
3. Use reversible processes wherever possible.
4. Use historically accurate repair and replacement materials and techniques unless otherwise indicated.
5. Record existing work before each procedure (preconstruction) and progress during the work with digital preconstruction documentation photographs or video recordings.

F. Notify Architect of visible changes in the integrity of material or components whether from environmental causes including biological attack, UV degradation, freezing, or thawing or from structural defects including cracks, movement, or distortion.
   1. Do not proceed with the work in question until directed by Architect.

G. Where missing features are indicated to be repaired or replaced, provide work with appearance based on accurate duplications rather than on conjecture, subject to approval of Architect.

H. Where work requires existing features to be removed or dismantled and reinstalled, perform these operations without damage to the material itself, to adjacent materials, or to the substrate.

I. Identify new and replacement materials and features with permanent marks hidden in the completed Work to distinguish them from original materials. Record a legend of identification marks and the locations of the items on record Drawings.

3.7 SELECTIVE DEMOLITION, GENERAL

A. General: Demolish and remove existing construction only to the extent required by new construction and as indicated. Use methods required to complete the Work within limitations of governing regulations and as follows:
   1. Proceed with selective demolition systematically, from higher to lower level. Complete selective demolition operations above each floor or tier before disturbing supporting members on the next lower level.
   2. Neatly cut openings and holes plumb, square, and true to dimensions required. Use cutting methods least likely to damage construction to remain or adjoining construction. Use hand tools or small power tools designed for sawing or grinding, not hammering and chopping, to minimize disturbance of adjacent surfaces. Temporarily cover openings to remain.
   3. Cut or drill from the exposed or finished side into concealed surfaces to avoid marring existing finished surfaces.
   4. Do not use cutting torches until work area is cleared of flammable materials. At concealed spaces, such as duct and pipe interiors, verify condition and contents of hidden space before starting flame-cutting operations. Maintain fire watch and portable fire-suppression devices during flame-cutting operations.
   5. Maintain adequate ventilation when using cutting torches.
   6. Remove decayed, vermin-infested, or otherwise dangerous or unsuitable materials and promptly dispose of off-site.
   7. Remove structural framing members and lower to ground by method suitable to avoid free fall and to prevent ground impact or dust generation.
   8. Locate selective demolition equipment and remove debris and materials so as not to impose excessive loads on supporting walls, floors, or framing.
   9. Dispose of demolished items and materials promptly. Comply with requirements in Section 01 74 19 "Construction Waste Management and Disposal."

3.8 HISTORIC REMOVAL AND DISMANTLING

A. General: Have removal and dismantling work performed by a qualified historic removal and dismantling specialist. Ensure that historic removal and dismantling specialist's field supervisors are present when removal and dismantling work begins and during its progress.

B. Perform work in accordance with the historic treatment program and approved mockup(s).
   1. Provide supports or reinforcement for existing construction that becomes temporarily weakened by the work, until the work is completed.
   2. Perform cutting by hand or with small power tools wherever possible. Cut holes and slots neatly to size required, with minimum disturbance of adjacent work.

3. Do not operate air compressors inside building, unless approved by Architect in each case.
4. Do not drill or cut columns, beams, joints, girders, structural slabs, or other structural supporting elements, without having Contractor's professional engineer's written approval for each location before such work is begun.
5. Do not use explosives.

C. Water-Mist Sprinkling: Use water-mist sprinkling and other wet methods to control dust only with adequate, approved procedures and equipment that ensure that such water will not create a hazard or adversely affect other building areas or materials.

D. Unacceptable Equipment: Keep equipment that is not permitted for historic removal or dismantling work away from the vicinity where such work is being performed.

E. Removing and Dismantling Items On or Near Historic Surfaces:
1. Use only dismantling tools and procedures within 12 inches of historic surface. Do not use pry bars. Protect historic surface from contact with or damage by tools.
2. Unfasten items to be removed, in the opposite order from which they were installed.
3. Support each item as it becomes loosened to prevent stress and damage to the historic surface.
4. Dismantle anchorages.

F. Masonry Walls:
1. Remove masonry carefully and erect temporary bracing and supports as needed to prevent unexpected collapse of materials being removed.
2. Dismantle top edge and sides before removing wall. Stop removal work and immediately inform the Architect if any structural elements above or adjacent to the work show signs of distress or dislocation during any phase of removal work.
3. Remove wall in easily managed pieces.
4. During removal, the Contractor is responsible for the stability of the partially remaining wall. Notify the Architect of the condition of temporary bracing for wall if work is temporarily stopped during the wall's removal.

G. Steelwork:
1. Expose all structural steel for examination by the Architect and the Contractor's professional engineer before proceeding with removal or dismantling.
2. If any distress is shown by the structure during performance of the work, stop work and take immediate precautionary measures to ensure safety of the structure. Inform the Architect of the problem, steps taken, and proposed corrective actions.
3. Brace and support structural steel being removed and remaining during all phases of the work.
4. Concrete-Encased Steel: Where steel is known to be encased by concrete being removed, saw cut with blades that will cut no deeper than the thickness of the concrete cover with an adequate margin for error in the location of the steel. Isolate sections of concrete by saw cutting before beginning removal.

H. Loose Plaster: Identify loose, non-historic plaster and separate it from its substrate by tapping with a hammer and prying with a chisel or screwdriver. Do not use pry bars. Leave sound, firmly adhered plaster in place. Do not damage, remove, or dismantle historic plasterwork except where indicated or where it is an immediate hazard to personnel and as approved by the Architect.

I. Concrete Floor Surface Removal: Remove floor surfaces, fill, and topping, to the indicated lower elevations or cleavage planes as indicated on Drawings. Use dismantling methods when

removing floor surfaces 12 inches or less away from historic walls. Take away material to a uniform surface at the indicated level.

J. Anchorages:
   1. Remove anchorages associated with removed items.
   2. Dismantle anchorages associated with dismantled items.
   3. In non-historic surfaces, patch holes created by anchorage removal or dismantling in accordance with the requirements for new work.
   4. In historic surfaces, patch or repair holes created by anchorage removal or dismantling in accordance with Section specific to the historic surface being patched.

3.9 BIRD-EXCREMENT REMOVAL

A. General: Before disturbing accumulated bird excrement, employ a qualified industrial hygienist to perform tests, make recommendations, and observe the work. Follow procedures required by authorities having jurisdiction and recommended by industrial hygienist.

B. Removing Bird Excrement: Have bird-excrement removal work performed by a qualified bird-excrement removal specialist.
   1. Before removal, treat bird excrement to kill pathogens; dampen excrement to prevent particles becoming airborne.
   2. Use only nonmetallic tools such as plastic spatulas and brushes with natural fiber or nylon bristles.
   3. Collect excrement debris as it is removed and legally dispose of off-site.

3.10 DISPOSAL OF DEMOLISHED MATERIALS

A. General: Except for items or materials indicated to be recycled, reused, salvaged, reinstalled, or otherwise indicated to remain Owner's property, remove demolished materials from Project site and legally dispose of them.
   1. Do not allow demolished materials to accumulate on-site.
   2. Remove and transport debris in a manner that will prevent spillage on adjacent surfaces and areas.
   3. Remove debris from elevated portions of building by chute, hoist, or other device that will convey debris to grade level in a controlled descent.
   4. Comply with requirements specified in Section 01 74 19 "Construction Waste Management and Disposal."

B. Burning: Do not burn demolished materials.

3.11 CLEANING

A. Clean adjacent structures and improvements of dust, dirt, and debris caused by selective demolition operations. Return adjacent areas to condition existing before selective demolition operations began.

END OF SECTION 01 35 91

SECTION 01 40 00 - QUALITY REQUIREMENTS

PART 1 - GENERAL

1.1 RELATED DOCUMENTS

A. Drawings and general provisions of the Contract, including General and Supplementary Conditions and other Division 01 Specification Sections, apply to this Section.

1.2 SUMMARY

A. Section includes administrative and procedural requirements for quality assurance and quality control.

B. Testing and inspecting services are required to verify compliance with requirements specified or indicated. These services do not relieve Contractor of responsibility for compliance with the Contract Document requirements.
   1. Specific quality-assurance and -control requirements for individual construction activities are specified in the Sections that specify those activities. Requirements in those Sections may also cover production of standard products.
   2. Specified tests, inspections, and related actions do not limit Contractor's other quality-assurance and -control procedures that facilitate compliance with the Contract Document requirements.
   3. Requirements for Contractor to provide quality-assurance and -control services required by Architect, Owner, or authorities having jurisdiction are not limited by provisions of this Section.

C. Related Sections:
   1. Divisions 02 through 49 Sections for specific test and inspection requirements.

1.3 DEFINITIONS

A. Quality-Assurance Services: Activities, actions, and procedures performed before and during execution of the Work to guard against defects and deficiencies and substantiate that proposed construction will comply with requirements.

B. Quality-Control Services: Tests, inspections, procedures, and related actions during and after execution of the Work to evaluate that actual products incorporated into the Work and completed construction comply with requirements. Services do not include contract enforcement activities performed by Architect.

C. Mockups: Full size physical assemblies that are constructed on-site. Mockups are constructed to verify selections made under sample submittals; to demonstrate aesthetic effects and, where indicated, qualities of materials and execution; to review coordination, testing, or operation; to show interface between dissimilar materials; and to demonstrate compliance with specified installation tolerances. Mockups are not Samples. Unless otherwise indicated, approved mockups establish the standard by which the Work will be judged.
   1. Laboratory Mockups: Full-size, physical assemblies constructed at testing facility to verify performance characteristics.
   2. Integrated Exterior Mockups: Mockups of the exterior envelope erected separately from the building but on the project site, consisting of multiple products, assemblies and subassemblies.

3. Room Mockups: Mockups of typical interior spaces complete with wall, floor, and ceiling finishes, doors, windows, millwork, casework, specialties, furnishings and equipment, and lighting.

D. Preconstruction Testing: Tests and inspections performed specifically for the Project before products and materials are incorporated into the Work to verify performance or compliance with specified criteria.

E. Product Testing: Tests and inspections that are performed by an NRTL, an NVLAP, or a testing agency qualified to conduct product testing and acceptable to authorities having jurisdiction, to establish product performance and compliance with specified requirements.

F. Source Quality-Control Testing: Tests and inspections that are performed at the source, i.e., plant, mill, factory, or shop.

G. Field Quality-Control Testing: Tests and inspections that are performed on-site for installation of the Work and for completed Work.

H. Testing Agency: An entity engaged to perform specific tests, inspections, or both. Testing laboratory shall mean the same as testing agency.

I. Installer/Applicator/Erector: Contractor or another entity engaged by Contractor as an employee, Subcontractor, or Sub-subcontractor, to perform a particular construction operation, including installation, erection, application, and similar operations.
   1. Use of trade-specific terminology in referring to a trade or entity does not require that certain construction activities be performed by accredited or unionized individuals, or that requirements specified apply exclusively to specific trade or trades.

J. Experienced: When used with an entity or individual, "experienced" means having successfully completed a minimum of five previous projects similar in nature, size, and extent to this Project; being familiar with special requirements indicated; and having complied with requirements of authorities having jurisdiction.

1.4 CONFLICTING REQUIREMENTS

A. Referenced Standards: If compliance with two or more standards is specified and the standards establish different or conflicting requirements for minimum quantities or quality levels, comply with the most stringent requirement. Refer conflicting requirements that are different, but apparently equal, to Architect for a decision before proceeding.

B. Minimum Quantity or Quality Levels: The quantity or quality level shown or specified shall be the minimum provided or performed. The actual installation may comply exactly with the minimum quantity or quality specified, or it may exceed the minimum within reasonable limits. To comply with these requirements, indicated numeric values are minimum or maximum, as appropriate, for the context of requirements. Refer uncertainties to Architect for a decision before proceeding.

1.5 ACTION SUBMITTALS

A. Shop Drawings: For mockups, provide plans, sections, and elevations, indicating materials and size of mockup construction.
   1. Indicate manufacturer and model number of individual components.
   2. Provide axonometric drawings for conditions difficult to illustrate in two dimensions.

1.6 INFORMATIONAL SUBMITTALS

A. Contractor's Statement of Responsibility: When required by authorities having jurisdiction, submit copy of written statement of responsibility sent to authorities having jurisdiction before starting work on the following systems.
   1. Seismic-force resisting system, designated seismic system, or component listed in the designated seismic system quality assurance plan prepared by the Architect.
   2. Main wind-force resisting system or a wind-resisting component listed in the wind-force-resisting system quality assurance plan prepared by the Architect.

B. Testing Agency Qualifications: For testing agencies specified in "Quality Assurance" Article to demonstrate their capabilities and experience. Include proof of qualifications in the form of a recent report on the inspection of the testing agency by a recognized authority.

C. Schedule of Tests and Inspections: Prepare in tabular form and include the following:
   1. Specification Section number and title.
   2. Entity responsible for performing tests and inspections.
   3. Description of test and inspection.
   4. Identification of applicable standards.
   5. Identification of test and inspection methods.
   6. Number of tests and inspections required.
   7. Time schedule or time span for tests and inspections.
   8. Requirements for obtaining samples.
   9. Unique characteristics of each quality-control service.

1.7 REPORTS AND DOCUMENTS

A. Test and Inspection Reports: Prepare and submit certified written reports specified in other Sections. Include the following:
   1. Date of issue.
   2. Project title and number.
   3. Name, address, and telephone number of testing agency.
   4. Dates and locations of samples and tests or inspections.
   5. Names of individuals making tests and inspections.
   6. Description of the Work and test and inspection method.
   7. Identification of product and Specification Section.
   8. Complete test or inspection data.
   9. Test and inspection results and an interpretation of test results.
   10. Record of temperature and weather conditions at time of sample taking and testing and inspecting.
   11. Comments or professional opinion on whether tested or inspected Work complies with the Contract Document requirements.
   12. Name and signature of laboratory inspector.
   13. Recommendations on retesting and reinspecting.

B. Manufacturer's Technical Representative's Field Reports: Prepare written information documenting manufacturer's technical representative's tests and inspections specified in other Sections. Include the following:
   1. Name, address, and telephone number of technical representative making report.
   2. Statement on condition of substrates and their acceptability for installation of product.
   3. Statement that products at Project site comply with requirements.
   4. Summary of installation procedures being followed, whether they comply with requirements and, if not, what corrective action was taken.
   5. Results of operational and other tests and a statement of whether observed performance complies with requirements.

6. Statement on whether conditions, products, and installation will affect warranty.
7. Other required items indicated in individual Specification Sections.

C. Factory-Authorized Service Representative's Reports: Prepare written information documenting manufacturer's factory-authorized service representative's tests and inspections specified in other Sections. Include the following:
1. Name, address, and telephone number of factory-authorized service representative making report.
2. Statement that equipment complies with requirements.
3. Results of operational and other tests and a statement of whether observed performance complies with requirements.
4. Statement on whether conditions, products, and installation will affect warranty.
5. Other required items indicated in individual Specification Sections.

D. Permits, Licenses, and Certificates: For Owner's records, submit copies of permits, licenses, certifications, inspection reports, releases, jurisdictional settlements, notices, receipts for fee payments, judgments, correspondence, records, and similar documents, established for compliance with standards and regulations bearing on performance of the Work.

1.8 QUALITY ASSURANCE

A. General: Qualifications paragraphs in this article establish the minimum qualification levels required; individual Specification Sections specify additional requirements.

B. Manufacturer Qualifications: A firm experienced in manufacturing products or systems similar to those indicated for this Project and with a record of successful in-service performance, as well as sufficient production capacity to produce required units.

C. Fabricator Qualifications: A firm experienced in producing products similar to those indicated for this Project and with a record of successful in-service performance, as well as sufficient production capacity to produce required units.

D. Installer Qualifications: A firm or individual experienced in installing, erecting, or assembling work similar in material, design, and extent to that indicated for this Project, whose work has resulted in construction with a record of successful in-service performance.

E. Professional Engineer Qualifications: A professional engineer who is legally qualified to practice in jurisdiction where Project is located and who is experienced in providing engineering services of the kind indicated. Engineering services are defined as those performed for installations of the system, assembly, or product that are similar to those indicated for this Project in material, design, and extent.

F. Specialists: Certain Specification Sections require that specific construction activities shall be performed by entities who are recognized experts in those operations. Specialists shall satisfy qualification requirements indicated and shall be engaged for the activities indicated.
1. Requirements of authorities having jurisdiction shall supersede requirements for specialists.

G. Testing Agency Qualifications: An NRTL, an NVLAP, or an independent agency with the experience and capability to conduct testing and inspecting indicated, as documented according to ASTM E 329; and with additional qualifications specified in individual Sections; and where required by authorities having jurisdiction, that is acceptable to authorities.
1. NRTL: A nationally recognized testing laboratory according to 29 CFR 1910.7.
2. NVLAP: A testing agency accredited according to NIST's National Voluntary Laboratory Accreditation Program.

H. Manufacturer's Technical Representative Qualifications: An authorized representative of manufacturer who is trained and approved by manufacturer to observe and inspect installation of manufacturer's products that are similar in material, design, and extent to those indicated for this Project.

I. Factory-Authorized Service Representative Qualifications: An authorized representative of manufacturer who is trained and approved by manufacturer to inspect installation of manufacturer's products that are similar in material, design, and extent to those indicated for this Project.

J. Preconstruction Testing: Where testing agency is indicated to perform preconstruction testing for compliance with specified requirements for performance and test methods, comply with the following:
   1. Contractor responsibilities include the following:
      a. Provide test specimens representative of proposed products and construction.
      b. Submit specimens in a timely manner with sufficient time for testing and analyzing results to prevent delaying the Work.
      c. Provide sizes and configurations of test assemblies, mockups, and laboratory mockups to adequately demonstrate capability of products to comply with performance requirements.
      d. Build site-assembled test assemblies and mockups using installers who will perform same tasks for Project.
      e. Build laboratory mockups at testing facility using personnel, products, and methods of construction indicated for the completed Work.
      f. When testing is complete, remove test specimens, assemblies, mockups; do not reuse products on Project.
   2. Testing Agency Responsibilities: Submit a certified written report of each test, inspection, and similar quality-assurance service to Architect, with copy to Contractor. Interpret tests and inspections and state in each report whether tested and inspected work complies with or deviates from the Contract Documents.

K. Mockups, General: Before installing portions of the Work requiring mockups, build mockups for each form of construction and finish required to comply with the following requirements, using materials indicated for the completed Work:
   1. Build mockups in location and of size indicated or, if not indicated, as directed by Architect.
   2. Notify Architect seven days in advance of dates and times when mockups will be constructed.
   3. Employ supervisory personnel who will oversee mockup construction. Employ workers that will be employed during the construction at the Project.
   4. Demonstrate the proposed range of aesthetic effects and workmanship.
   5. Obtain Architect's approval of mockups before starting work, fabrication, or construction.
      a. Allow seven days for initial review and each re-review of each mockup.
   6. Maintain mockups during construction in an undisturbed condition as a standard for judging the completed Work.
   7. Demolish and remove mockups when directed, unless otherwise indicated.
   8. Provide temporary lighting to replicate the same source, foot-candle level, and color temperature of specified lighting for space enabling Owner and Architect to accurately evaluate finish selections and quality of the Work.

1.9 QUALITY CONTROL

A. Owner Responsibilities: Where quality-control services are indicated as Owner's responsibility, Owner will engage a qualified testing agency to perform these services.

1. Owner will furnish Contractor with names, addresses, and telephone numbers of testing agencies engaged and a description of types of testing and inspecting they are engaged to perform.
2. Costs for retesting and re-inspecting construction that replaces or is necessitated by work that failed to comply with the Contract Documents will be charged to Contractor, and the Contract Sum will be adjusted by Change Order.

B. Contractor Responsibilities: Tests and inspections not explicitly assigned to Owner are Contractor's responsibility. Perform additional quality-control activities required to verify that the Work complies with requirements, whether specified or not.
1. Unless otherwise indicated, provide quality-control services specified and those required by authorities having jurisdiction. Perform quality-control services required of Contractor by authorities having jurisdiction, whether specified or not.
2. Where services are indicated as Contractor's responsibility, engage a qualified testing agency to perform these quality-control services.
   a. Contractor shall not employ same entity engaged by Owner, unless agreed to in writing by Owner.
3. Notify testing agencies at least 24 hours in advance of time when Work that requires testing or inspecting will be performed.
4. Where quality-control services are indicated as Contractor's responsibility, submit a certified written report, in duplicate, of each quality-control service.
5. Testing and inspecting requested by Contractor and not required by the Contract Documents are Contractor's responsibility.
6. Submit additional copies of each written report directly to authorities having jurisdiction, when they so direct.

C. Manufacturer's Field Services: Where indicated, engage a factory-authorized service representative to inspect field-assembled components and equipment installation, including service connections. Report results in writing as specified in Division 01 Section "Submittal Procedures."

D. Manufacturer's Technical Services: Where indicated, engage a manufacturer's technical representative to observe and inspect the Work. Manufacturer's technical representative's services include participation in preinstallation conferences, examination of substrates and conditions, verification of materials, observation of Installer activities, inspection of completed portions of the Work, and submittal of written reports.

E. Retesting/Reinspecting: Regardless of whether original tests or inspections were Contractor's responsibility, provide quality-control services, including retesting and reinspecting, for construction that replaced Work that failed to comply with the Contract Documents.

F. Testing Agency Responsibilities: Cooperate with Architect and Contractor in performance of duties. Provide qualified personnel to perform required tests and inspections.
1. Notify Architect and Contractor promptly of irregularities or deficiencies observed in the Work during performance of its services.
2. Determine the location from which test samples will be taken and in which in-situ tests are conducted.
3. Conduct and interpret tests and inspections and state in each report whether tested and inspected work complies with or deviates from requirements.
4. Submit a certified written report, in duplicate, of each test, inspection, and similar quality-control service through Contractor.
5. Do not release, revoke, alter, or increase the Contract Document requirements or approve or accept any portion of the Work.
6. Do not perform any duties of Contractor.

G. Associated Services: Cooperate with agencies performing required tests, inspections, and similar quality-control services, and provide reasonable auxiliary services as requested. Notify agency sufficiently in advance of operations to permit assignment of personnel. Provide the following:
   1. Access to the Work.
   2. Incidental labor and facilities necessary to facilitate tests and inspections.
   3. Adequate quantities of representative samples of materials that require testing and inspecting. Assist agency in obtaining samples.
   4. Facilities for storage and field curing of test samples.
   5. Delivery of samples to testing agencies.
   6. Preliminary design mix proposed for use for material mixes that require control by testing agency.
   7. Security and protection for samples and for testing and inspecting equipment at Project site.

H. Coordination: Coordinate sequence of activities to accommodate required quality-assurance and -control services with a minimum of delay and to avoid necessity of removing and replacing construction to accommodate testing and inspecting.
   1. Schedule times for tests, inspections, obtaining samples, and similar activities.

I. Schedule of Tests and Inspections: Prepare a schedule of tests, inspections, and similar quality-control services required by the Contract Documents. Coordinate and submit concurrently with Contractor's construction schedule. Update as the Work progresses.
   1. Distribution: Distribute schedule to Owner, Architect, testing agencies, and each party involved in performance of portions of the Work where tests and inspections are required.

1.10 SPECIAL TESTS AND INSPECTIONS

A. Special Tests and Inspections: Owner will engage a qualified special inspector or testing agency to conduct special tests and inspections required by authorities having jurisdiction as the responsibility of Owner, and as follows:
   1. Verifying that manufacturer maintains detailed fabrication and quality-control procedures and reviewing the completeness and adequacy of those procedures to perform the Work.
   2. Notifying Architect and Contractor promptly of irregularities and deficiencies observed in the Work during performance of its services.
   3. Submitting a certified written report of each test, inspection, and similar quality-control service to Architect with copy to Contractor and to authorities having jurisdiction.
   4. Submitting a final report of special tests and inspections at Substantial Completion, which includes a list of unresolved deficiencies.
   5. Interpreting tests and inspections and stating in each report whether tested and inspected work complies with or deviates from the Contract Documents.
   6. Retesting and reinspecting corrected work.

PART 2 - PRODUCTS (Not Used)

PART 3 - EXECUTION

3.1 TEST AND INSPECTION LOG

A. Prepare a record of tests and inspections. Include the following:
   1. Date test or inspection was conducted.
   2. Description of the Work tested or inspected.
   3. Date test or inspection results were transmitted to Architect.
   4. Identification of testing agency or special inspector conducting test or inspection.

B. Maintain log at Project site. Post changes and modifications as they occur. Provide access to test and inspection log for Architect's reference during normal working hours.

3.2 REPAIR AND PROTECTION

A. General: On completion of testing, inspecting, sample taking, and similar services, repair damaged construction and restore substrates and finishes.

1. Provide materials and comply with installation requirements specified in other Specification Sections or matching existing substrates and finishes. Restore patched areas and extend restoration into adjoining areas with durable seams that are as invisible as possible. Comply with the Contract Document requirements for cutting and patching in Division 01 Section "Execution."

B. Protect construction exposed by or for quality-control service activities.

C. Repair and protection are Contractor's responsibility, regardless of the assignment of responsibility for quality-control services.

END OF SECTION 01 40 00

SECTION 01 42 00 - REFERENCES

PART 1 - GENERAL

1.1 RELATED DOCUMENTS

A. Drawings and general provisions of the Contract, including General and Supplementary Conditions and other Division 01 Specification Sections, apply to this Section.

1.2 DEFINITIONS

A. General: Basic Contract definitions are included in the Conditions of the Contract.

B. "Approved": When used to convey Architect's action on Contractor's submittals, applications, and requests, "approved" is limited to Architect's duties and responsibilities as stated in the Conditions of the Contract.

C. "Directed": A command or instruction by Architect. Other terms including "requested," "authorized," "selected," "required," and "permitted" have the same meaning as "directed."

D. "Indicated": Requirements expressed by graphic representations or in written form on Drawings, in Specifications, and in other Contract Documents. Other terms including "shown," "noted," "scheduled," and "specified" have the same meaning as "indicated."

E. "Regulations": Laws, ordinances, statutes, and lawful orders issued by authorities having jurisdiction, and rules, conventions, and agreements within the construction industry that control performance of the Work.

F. "Furnish": Supply and deliver to Project site, ready for unloading, unpacking, assembly, installation, and similar operations.

G. "Install": Operations at Project site including unloading, temporarily storing, unpacking, assembling, erecting, placing, anchoring, applying, working to dimension, finishing, curing, protecting, cleaning, and similar operations.

H. "Provide": Furnish and install, complete and ready for the intended use.

I. "Project Site": Space available for performing construction activities. The extent of Project site is shown on Drawings and may or may not be identical with the description of the land on which Project is to be built.

1.3 INDUSTRY STANDARDS

A. Applicability of Standards: Unless the Contract Documents include more stringent requirements, applicable construction industry standards have the same force and effect as if bound or copied directly into the Contract Documents to the extent referenced. Such standards are made a part of the Contract Documents by reference.

B. Publication Dates: Comply with standards in effect as of date of the Contract Documents unless otherwise indicated.
   1. For standards referenced by applicable building codes, comply with dates of standards as listed in building codes.

C. Copies of Standards: Each entity engaged in construction on Project should be familiar with industry standards applicable to its construction activity. Copies of applicable standards are not bound with the Contract Documents.

1. Where copies of standards are needed to perform a required construction activity, obtain copies directly from publication source.

1.4 ABBREVIATIONS AND ACRONYMS

A. Industry Organizations: Where abbreviations and acronyms are used in Specifications or other Contract Documents, they shall mean the recognized name of the entities in the following list. Abbreviations and acronyms not included in this list shall mean the recognized name of the entities indicated in Gale's "Encyclopedia of Associations: National Organizations of the U.S." or in Columbia Books' "National Trade & Professional Associations of the United States." The information in this list is subject to change and is believed to be accurate as of the date of the Contract Documents.

AABC..... Associated Air Balance Council; www.aabc.com

AAMA..... American Architectural Manufacturers Association; www.aamanet.org

AAPFCO.... Association of American Plant Food Control Officials; www.aapfco.org

AASHTO.... American Association of State Highway and Transportation Officials; www.transportation.org

AATCC ..... American Association of Textile Chemists and Colorists; www.aatcc.org

ABMA..... American Bearing Manufacturers Association; www.americanbearings.org

ABMA..... American Boiler Manufacturers Association; www.abma.com

ACI..... American Concrete Institute; (Formerly: ACI International); www.concrete.org

ACPA..... American Concrete Pipe Association; www.concrete-pipe.org

AEIC ..... Association of Edison Illuminating Companies, Inc. (The); www.aeic.org

AF&PA..... American Forest & Paper Association; www.afandpa.org

AGA ..... American Gas Association; www.aga.org

AHAM ..... Association of Home Appliance Manufacturers; www.aham.org

AHRI ..... Air-Conditioning, Heating, and Refrigeration Institute (The); www.ahrinet.org

AI ..... Asphalt Institute; www.asphaltinstitute.org

AIA..... American Institute of Architects (The); www.aia.org

AISC ..... American Institute of Steel Construction; www.aisc.org

AISI..... American Iron and Steel Institute; www.steel.org

AITC..... American Institute of Timber Construction; www.aitc-glulam.org

AMCA ..... Air Movement and Control Association International, Inc.; www.amca.org

ANSI ..... American National Standards Institute; www.ansi.org

AOSA..... Association of Official Seed Analysts, Inc.; www.aosaseed.com

APA..... The Engineered Wood Association; www.apawood.org

APA..... Architectural Precast Association; www.archprecast.org

API..... American Petroleum Institute; www.api.org

ARI..... Air-Conditioning & Refrigeration Institute; (See AHRI)

ARI..... American Refrigeration Institute; (See AHRI)

ARMA ..... Asphalt Roofing Manufacturers Association; www.asphaltroofing.org

ASCE..... American Society of Civil Engineers; www.asce.org

ASCE/SEI .. American Society of Civil Engineers/Structural Engineering Institute; (See ASCE)

ASHRAE .... American Society of Heating, Refrigerating and Air-Conditioning Engineers; www.ashrae.org

ASME..... ASME International; (American Society of Mechanical Engineers); www.asme.org

ASSE ..... American Society of Sanitary Engineering; www.asse-plumbing.org

ASSP ..... American Society of Safety Professionals (The); www.assp.org

ASTM..... ASTM International; www.astm.org

ATIS..... Alliance for Telecommunications Industry Solutions; www.atis.org

AVIXA ..... Audiovisual and Integrated Experience Association; (Formerly: Infocomm International); www.soundandcommunications.com

AWEA ..... American Wind Energy Association; www.awea.org

AWI ..... Architectural Woodwork Institute; www.awinet.org

AWMAC ..... Architectural Woodwork Manufacturers Association of Canada; www.awmac.com

AWPA ..... American Wood Protection Association; www.awpa.com

AWS..... American Welding Society; www.aws.org

AWWA ..... American Water Works Association; www.awwa.org

BHMA ..... Builders Hardware Manufacturers Association; www.buildershardware.com

BIA ..... Brick Industry Association (The); www.gobrick.com

BICSI ..... BICSI, Inc.; www.bicsi.org

BIFMA..... BIFMA International; (Business and Institutional Furniture Manufacturer's Association); www.bifma.org

BISSC ..... Baking Industry Sanitation Standards Committee; www.bissc.org

BWF..... Badminton World Federation; (Formerly: International Badminton Federation); www.bissc.org

CDA ..... Copper Development Association; www.copper.org

CE..... Conformite Europeenne; http://ec.europa.eu/growth/single-market/ce-marking/

CEA ..... Canadian Electricity Association; www.electricity.ca

CFFA ..... Chemical Fabrics and Film Association, Inc.; www.chemicalfabricsandfilm.com

CFSEI ..... Cold-Formed Steel Engineers Institute; www.cfsei.org

CGA..... Compressed Gas Association; www.cganet.com

CIMA..... Cellulose Insulation Manufacturers Association; www.cellulose.org

CISCA..... Ceilings & Interior Systems Construction Association; www.cisca.org

CISPI ..... Cast Iron Soil Pipe Institute; www.cispi.org

CLFMI ..... Chain Link Fence Manufacturers Institute; www.chainlinkinfo.org

CPA ..... Composite Panel Association; www.compositepanel.org

CRI..... Carpet and Rug Institute (The); www.carpet-rug.org

CRRC ..... Cool Roof Rating Council; www.coolroofs.org

CRSI ..... Concrete Reinforcing Steel Institute; www.crsi.org

CSA ..... CSA Group; www.csa-group.org

CSI..... Construction Specifications Institute (The); www.csiresources.org

CSSB ..... Cedar Shake & Shingle Bureau; www.cedarbureau.org

CTA..... Consumer Technology Association; www.cta.tech

CTI ..... Cooling Technology Institute; (Formerly: Cooling Tower Institute); www.coolingtechnology.org

CWC ..... Composite Wood Council; (See CPA)

DASMA ..... Door and Access Systems Manufacturers Association; www.dasma.com.

DHA ..... Decorative Hardwoods Association; (Formerly: Hardwood Plywood & Veneer Association); www.decorativehardwoods.org

DHI..... Door and Hardware Institute; www.dhi.org

ECA ..... Electronic Components Association; (See ECIA)

ECAMA ..... Electronic Components Assemblies & Materials Association; (See ECIA)

ECIA ..... Electronic Components Industry Association; www.eciaonline.org

EIA ..... Electronic Industries Alliance; (See TIA)

EIMA ..... EIFS Industry Members Association; www.eima.com

EJMA ..... Expansion Joint Manufacturers Association, Inc.; www.ejma.org

EOS/ESD... Association; (Electrostatic Discharge Association); www.esda.org

ESTA ..... Entertainment Services and Technology Association; (See PLASA)

ETL ..... Intertek (See Intertek); www.intertek.com

EVO ..... Efficiency Valuation Organization; www.evo-world.org

FCI ..... Fluid Controls Institute; www.fluidcontrolsinstitute.org

FIBA..... Federation Internationale de Basketball; (The International Basketball Federation); www.fiba.com

FIVB..... Federation Internationale de Volleyball; (The International Volleyball Federation); www.fivb.org

FM..... Approvals - FM Approvals LLC; www.fmglobal.com

FM..... Global - FM Global; (Formerly: FMG - FM Global); www.fmglobal.com

FRSA ..... Florida Roofing, Sheet Metal Contractors Association, Inc.; www.floridaroof.com

FSA..... Fluid Sealing Association; www.fluidsealing.com

FSC..... Forest Stewardship Council U.S.; www.fscus.org

GA..... Gypsum Association; www.gypsum.org

GANA..... Glass Association of North America; (See NGA)

GS..... Green Seal; www.greenseal.org

HI ..... Hydraulic Institute; www.pumps.org

HI/GAMA ... Hydronics Institute/Gas Appliance Manufacturers Association; (See AHRI)

HMMA..... Hollow Metal Manufacturers Association; (See NAAMM)

HPVA ..... Hardwood Plywood & Veneer Association; (See DHA)

HPW ..... H. P. White Laboratory, Inc.; www.hpwhite.com

IAPSC ..... International Association of Professional Security Consultants; www.iapsc.org

IAS ..... International Accreditation Service; www.iasonline.org

ICBO ..... International Conference of Building Officials; (See ICC)

ICC..... International Code Council; www.iccsafe.org

ICEA ..... Insulated Cable Engineers Association, Inc.; www.icea.net

ICPA ..... International Cast Polymer Alliance; www.icpa-hq.org

ICRI..... International Concrete Repair Institute, Inc.; www.icri.org

IEC..... International Electrotechnical Commission; www.iec.ch

IEEE..... Institute of Electrical and Electronics Engineers, Inc. (The); www.ieee.org

IES..... Illuminating Engineering Society; (Formerly: Illuminating Engineering Society of North America); www.ies.org

IESNA..... Illuminating Engineering Society of North America; (See IES)

IEST..... Institute of Environmental Sciences and Technology; www.iest.org

IGMA..... Insulating Glass Manufacturers Alliance; www.igmaonline.org

IGSHPA..... International Ground Source Heat Pump Association; www.igshpa.org

II..... Infocomm International; (See AVIXA)

ILI..... Indiana Limestone Institute of America, Inc.; www.iliai.com

Intertek..... Intertek Group; (Formerly: ETL SEMCO; Intertek Testing Service NA); www.intertek.com

ISA..... International Society of Automation (The); (Formerly: Instrumentation, Systems, and Automation Society); www.isa.org

ISAS..... Instrumentation, Systems, and Automation Society (The); (See ISA)

ISFA..... International Surface Fabricators Association; (Formerly: International Solid Surface Fabricators Association); www.isfanow.org

ISO..... International Organization for Standardization; www.iso.org

ISSFA ..... International Solid Surface Fabricators Association; (See ISFA)

ITU..... International Telecommunication Union; www.itu.int/home

KCMA ..... Kitchen Cabinet Manufacturers Association; www.kcma.org

LMA ..... Laminating Materials Association; (See CPA)

LPI ..... Lightning Protection Institute; www.lightning.org

MBMA..... Metal Building Manufacturers Association; www.mbma.com

MCA..... Metal Construction Association; www.metalconstruction.org

MFMA..... Maple Flooring Manufacturers Association, Inc.; www.maplefloor.org

MFMA..... Metal Framing Manufacturers Association, Inc.; www.metalframingmfg.org

MHIA..... Material Handling Industry of America; www.mhia.org

MIA ..... Marble Institute of America; (See NSI)

MMPA..... Moulding & Millwork Producers Association; www.wmmpa.com

MPI ..... Master Painters Institute; www.paintinfo.com

MSS..... Manufacturers Standardization Society of The Valve and Fittings Industry Inc.; www.mss-hq.org

NAAMM ..... National Association of Architectural Metal Manufacturers; www.naamm.org

NACE..... NACE International; (National Association of Corrosion Engineers International); www.nace.org

NADCA..... National Air Duct Cleaners Association; www.nadca.com

NAIMA ..... North American Insulation Manufacturers Association; www.naima.org

NALP ..... National Association of Landscape Professionals; www.landscapeprofessionals.org

NBGQA..... National Building Granite Quarries Association, Inc.; www.nbgqa.com

NBI..... New Buildings Institute; www.newbuildings.org

NCAA..... National Collegiate Athletic Association (The); www.ncaa.org

NCMA..... National Concrete Masonry Association; www.ncma.org

NEBB..... National Environmental Balancing Bureau; www.nebb.org

NECA..... National Electrical Contractors Association; www.necanet.org

NeLMA..... Northeastern Lumber Manufacturers Association; www.nelma.org

NEMA ..... National Electrical Manufacturers Association; www.nema.org

NETA ..... InterNational Electrical Testing Association; www.netaworld.org

NFHS..... National Federation of State High School Associations; www.nfhs.org

NFPA ..... National Fire Protection Association; www.nfpa.org

NFPA ..... NFPA International; (See NFPA)

NFRC..... National Fenestration Rating Council; www.nfrc.org

NGA..... National Glass Association (The); (Formerly: Glass Association of North America); www.glass.org

NHLA ..... National Hardwood Lumber Association; www.nhla.com

NLGA..... National Lumber Grades Authority; www.nlga.org

NOFMA..... National Oak Flooring Manufacturers Association; (See NWFA)

NOMMA..... National Ornamental & Miscellaneous Metals Association; www.nomma.org

NRCA..... National Roofing Contractors Association; www.nrca.net

NRMCA ..... National Ready Mixed Concrete Association; www.nrmca.org

NSF..... NSF International; www.nsf.org

NSI..... National Stone Institute; (Formerly: Marble Institute of America); www.naturalstoneinstitute.org.

NSPE..... National Society of Professional Engineers; www.nspe.org

NSSGA ..... National Stone, Sand & Gravel Association; www.nssga.org

NTMA..... National Terrazzo & Mosaic Association, Inc. (The); www.ntma.com

NWFA ..... National Wood Flooring Association; www.nwfa.org

PCI..... Precast/Prestressed Concrete Institute; www.pci.org

PDI..... Plumbing & Drainage Institute; www.pdionline.org

PLASA ..... PLASA; (Formerly: ESTA - Entertainment Services and Technology Association); www.plasa.org

RCSC..... Research Council on Structural Connections; www.boltcouncil.org

RFCI ..... Resilient Floor Covering Institute; www.rfci.com

RIS..... Redwood Inspection Service; www.redwoodinspection.com

SAE..... SAE International; www.sae.org

SCTE ..... Society of Cable Telecommunications Engineers; www.scte.org

SDI..... Steel Deck Institute; www.sdi.org

SDI..... Steel Door Institute; www.steeldoor.org

SEFA ..... Scientific Equipment and Furniture Association (The); www.sefalabs.com

SEI/ASCE .. Structural Engineering Institute/American Society of Civil Engineers; (See ASCE)

SIA..... Security Industry Association; www.siaonline.org

SJI..... Steel Joist Institute; www.steeljoist.org

SMA..... Screen Manufacturers Association; www.smainfo.org

SMACNA ... Sheet Metal and Air Conditioning Contractors' National Association; www.smacna.org

SMPTE ..... Society of Motion Picture and Television Engineers; www.smpte.org

SPFA ..... Spray Polyurethane Foam Alliance; www.sprayfoam.org

SPIB..... Southern Pine Inspection Bureau; www.spib.org

SPRI ..... Single Ply Roofing Industry; www.spri.org

SRCC..... Solar Rating & Certification Corporation; www.solar-rating.org

SSINA..... Specialty Steel Industry of North America; www.ssina.com

SSPC..... SSPC: The Society for Protective Coatings; www.sspc.org

STI ..... Steel Tank Institute; www.steeltank.com

SWI ..... Steel Window Institute; www.steelwindows.com

SWPA ..... Submersible Wastewater Pump Association; www.swpa.org

TCA..... Tilt-Up Concrete Association; www.tilt-up.org

TCNA..... Tile Council of North America, Inc.; www.tileusa.com

TEMA..... Tubular Exchanger Manufacturers Association, Inc.; www.tema.org

TIA ..... Telecommunications Industry Association (The); (Formerly: TIA/EIA - Telecommunications Industry Association/Electronic Industries Alliance); www.tiaonline.org

TIA/EIA ..... Telecommunications Industry Association/Electronic Industries Alliance; (See TIA)

TMS ..... The Masonry Society; www.masonrysociety.org

TPI ..... Truss Plate Institute; www.tpinst.org

TPI ..... Turfgrass Producers International; www.turfgrasssod.org

TRI ..... Tile Roofing Institute; www.tileroofing.org

UL ..... Underwriters Laboratories Inc.; www.ul.com

UNI..... Uni-Bell PVC Pipe Association; www.uni-bell.org

USAV..... USA Volleyball; www.usavolleyball.org

USGBC..... U.S. Green Building Council; www.usgbc.org

USITT ..... United States Institute for Theatre Technology, Inc.; www.usitt.org

WA ..... Wallcoverings Association; www.wallcoverings.org

WASTEC ... Waste Equipment Technology Association; www.wastec.org

WCLIB ..... West Coast Lumber Inspection Bureau; www.wclib.org

WCMA ..... Window Covering Manufacturers Association; www.wcmanet.org

WDMA ..... Window & Door Manufacturers Association; www.wdma.com

WI ..... Woodwork Institute; www.wicnet.org

WSRCA ..... Western States Roofing Contractors Association; www.wsrca.com

B. Code Agencies: Where abbreviations and acronyms are used in Specifications or other Contract Documents, they shall mean the recognized name of the entities in the following list. This information is believed to be accurate as of the date of the Contract Documents.

DIN..... Deutsches Institut fur Normung e.V.; www.din.de

IAPMO ..... International Association of Plumbing and Mechanical Officials; www.iapmo.org

ICC..... International Code Council; www.iccsafe.org

ICC-ES ..... ICC Evaluation Service, LLC; www.icc-es.org

C. Federal Government Agencies: Where abbreviations and acronyms are used in Specifications or other Contract Documents, they shall mean the recognized name of the entities in the

following list. Information is subject to change and is up to date as of the date of the Contract Documents.

COE..... Army Corps of Engineers; www.usace.army.mil

CPSC..... Consumer Product Safety Commission; www.cpsc.gov

DOC..... Department of Commerce; National Institute of Standards and Technology; www.nist.gov

DOD..... Department of Defense; www.quicksearch.dla.mil

DOE..... Department of Energy; www.energy.gov

EPA..... Environmental Protection Agency; www.epa.gov

FAA..... Federal Aviation Administration; www.faa.gov

FG..... Federal Government Publications; www.gpo.gov/fdsys

GSA ..... General Services Administration; www.gsa.gov

HUD..... Department of Housing and Urban Development; www.hud.gov

LBL ..... Lawrence Berkeley National Laboratory; Environmental Energy Technologies Division; www.eetd.lbl.gov

OSHA..... Occupational Safety & Health Administration; www.osha.gov

SD..... Department of State; www.state.gov

TRB..... Transportation Research Board; National Cooperative Highway Research Program; The National Academies; www.trb.org

USDA..... Department of Agriculture; Agriculture Research Service; U.S. Salinity Laboratory; www.ars.usda.gov

USDA..... Department of Agriculture; Rural Utilities Service; www.usda.gov

USDOJ ..... Department of Justice; Office of Justice Programs; National Institute of Justice; www.ojp.usdoj.gov

USP ..... U.S. Pharmacopeial Convention; www.usp.org

USPS..... United States Postal Service; www.usps.com

D. Standards and Regulations: Where abbreviations and acronyms are used in Specifications or other Contract Documents, they shall mean the recognized name of the standards and regulations in the following list. This information is subject to change and is believed to be accurate as of the date of the Contract Documents.

CFR ..... Code of Federal Regulations; Available from Government Printing Office; www.govinfo.gov

DOD..... Department of Defense; Military Specifications and Standards; Available from DLA Document Services; www.quicksearch.dla.mil

DSCC..... Defense Supply Center Columbus; (See FS)

FED-STD ... Federal Standard; (See FS)

FS ..... Federal Specification; Available from DLA Document Services; www.quicksearch.dla.mil.

Available from Defense Standardization Program; www.dsp.dla.mil
Available from General Services Administration; www.gsa.gov
Available from National Institute of Building Sciences/Whole Building Design Guide; www.wbdg.org

MILSPEC... Military Specification and Standards; (See DOD)

USAB..... United States Access Board; www.access-board.gov

USATBCB.. U.S. Architectural & Transportation Barriers Compliance Board; (See USAB)

E. State Government Agencies: Where abbreviations and acronyms are used in Specifications or other Contract Documents, they shall mean the recognized name of the entities in the following list. This information is subject to change and is believed to be accurate as of the date of the Contract Documents.

CBHF..... State of California; Department of Consumer Affairs; Bureau of Electronic and Appliance Repair, Home Furnishings and Thermal Insulation; www.bearhfti.ca.gov

CCR..... California Code of Regulations; Office of Administrative Law; California Title 24 Energy Code; www.calregs.com

CDHS..... California Department of Health Services; (See CDPH)

CDPH..... California Department of Public Health; Indoor Air Quality Program; www.cal-iaq.org

CPUC..... California Public Utilities Commission; www.cpuc.ca.gov

SCAQMD... South Coast Air Quality Management District; www.aqmd.gov

TFS..... Texas A&M Forest Service; Sustainable Forestry and Economic Development; www.txforestservice.tamu.edu

PART 2 - PRODUCTS (Not Used)

PART 3 - EXECUTION (Not Used)

END OF SECTION 01 42 00

SECTION 01 50 00 - TEMPORARY FACILITIES AND CONTROLS

PART 1 - GENERAL

1.1 RELATED DOCUMENTS

A. Drawings and general provisions of the Contract, including General and Supplementary Conditions and other Division 01 Specification Sections, apply to this Section.

1.2 SUMMARY

A. Section includes requirements for temporary utilities, support facilities, and security and protection facilities.

B. Related Sections:
   1. Division 01 Section "Summary" for work restrictions and limitations on utility interruptions.

1.3 USE CHARGES

A. General: Installation and removal of and use charges for temporary facilities shall be included in the Contract Sum unless otherwise indicated. Allow other entities to use temporary services and facilities without cost, including, but not limited to, Architect, testing agencies, and authorities having jurisdiction.

B. Sewer Service: Pay sewer-service use charges for sewer usage by all entities for construction operations.

C. Water Service:
   1. The City offers to provide water for a charge to the Contractor for use on or in the Work. The water will be available from at least one central point convenient to the City. The Contractor shall be responsible for transportation of the water to the job site, by means of portable water tank, truck, or other conveyance.

D. Electric Power Service:
   1. Individual building owners may provide 110v electric power free of charge to the Contractor for use on or in the Work to their building. The Contractor shall take reasonable precautions to conserve energy. Typical uses for the power provided include tools and temporary lighting. Power shall be feed from existing convenience receptacles without overloading the electrical capacity of the circuit.
   2. If the individual building owner decline to provide power, then the Contractor shall provide 110v electrical power themselves, using portable generators, at no additional charge to the Project.
   3. Contractor shall provide 220v electrical power themselves, using portable generators.

1.4 INFORMATIONAL SUBMITTALS

A. Site Plan: Show temporary facilities, utility hookups, staging areas, and parking areas for construction personnel.

1.5 QUALITY ASSURANCE

A. Electric Service: Comply with NECA, NEMA, and UL standards and regulations for temporary electric service. Install service to comply with NFPA 70.

B. Tests and Inspections: Arrange for authorities having jurisdiction to test and inspect each temporary utility before use. Obtain required certifications and permits.

C. Accessible Temporary Egress: Comply with applicable provisions in the U.S. Architectural & Transportation Barriers Compliance Board's ADA-ABA Accessibility Guidelines.

1.6 PROJECT CONDITIONS

A. Temporary Use of Permanent Facilities: Engage installer of each permanent service to assume responsibility for operation, maintenance, and protection of each permanent service during its use as a construction facility before Owner's acceptance, regardless of previously assigned responsibilities.

PART 2 - PRODUCTS

2.1 MATERIALS

A. Chain-Link Fencing: Minimum 2-inch, 0.148-inch- thick, galvanized steel, chain-link fabric fencing; minimum 6 feet high with galvanized steel pipe posts; minimum 2-3/8-inch- OD line posts and 2-7/8-inch- OD corner and pull posts, with 1-5/8-inch- OD top rails.

B. Polyethylene Sheet: Reinforced, fire-resistive sheet, 10 mils minimum thickness unless otherwise indicated, with flame-spread rating of 15 or less per ASTM E 84.

C. Dust Control Adhesive-Surface Walk-off Mats: Provide mats minimum 36 by 60 inches.

D. Insulation: Unfaced mineral-fiber blanket, manufactured from glass, slag wool, or rock wool; with maximum flame-spread and smoke-developed indexes of 25 and 50, respectively.

E. Plywood Wall Sheathing: DOC PS 1; Exterior sheathing.

2.2 TEMPORARY FACILITIES

A. Field Offices, General: Prefabricated or mobile units with serviceable finishes, temperature controls, and foundations adequate for normal loading.
   1. Contractors Job trailer or Job office:
      a. Contractor may use a portion of the city owned public parking lots to locate a Job trailer and/or Storage trailer(s).
         1) Coordinate temporary locations with city project manager. Potential locations will be within 2 blocks of the job site.
      b. Contractor shall provide and pay for temporary electrical service and temporary heating or cooling to maintain uniform indoor temperature (as per terms of the lease agreement).

B. Common-Use Field Office: Of sufficient size to accommodate needs of Owner, Architect, and construction personnel office activities and to accommodate project meetings specified in other Division 01 Sections. Keep office clean and orderly. Furnish and equip offices as follows:
   1. Furniture required for Project-site documents including file cabinets, plan tables, plan racks, and bookcases.
   2. Conference room of sufficient size to accommodate meetings of 10 individuals. Provide electrical power service and 120-V ac duplex receptacles, with not less than 1 receptacle on each wall. Furnish room with conference table, chairs, and 4-foot- square tack and marker boards.
   3. Drinking water and private toilet.
   4. Coffee machine and supplies.

5. Heating and cooling equipment necessary to maintain a uniform indoor temperature of 68 to 72 deg F.
6. Lighting fixtures capable of maintaining average illumination of 20 fc at desk height.

C. Storage and Fabrication Sheds or Trailers: Provide sheds sized, furnished, and equipped to accommodate materials and equipment for construction operations.
1. Store combustible materials apart from building.

2.3 EQUIPMENT

A. Fire Extinguishers: Portable, UL rated; with class and extinguishing agent as required by locations and classes of fire exposures.

B. HVAC Equipment: Provide vented, self-contained, liquid-propane-gas or fuel-oil heaters with individual space thermostatic control.
1. Use of electric-resistance heaters, gasoline-burning space heaters, open-flame heaters, or salamander-type heating units is prohibited.
2. Heating Units: Listed and labeled for type of fuel being consumed, by a testing agency acceptable to authorities having jurisdiction, and marked for intended use.
3. Existing HVAC System: During use of existing HVAC system, provide filters with MERV of 8 at each return air grille in system.

PART 3 - EXECUTION

3.1 INSTALLATION, GENERAL

A. Locate facilities where they will serve Project adequately and result in minimum interference with performance of the Work. Relocate and modify facilities as required by progress of the Work.
1. Locate facilities to limit site disturbance as specified in Division 01 Section "Summary."
2. Refer to Drawing Sheet A0.2 for designated staging areas.

B. Provide each facility ready for use when needed to avoid delay. Do not remove until facilities are no longer needed or are replaced by authorized use of completed permanent facilities.

3.2 TEMPORARY UTILITY INSTALLATION

A. General: Install temporary service or connect to existing service.
1. Arrange with utility company, Owner, and existing users for time when service can be interrupted, if necessary, to make connections for temporary services.
2. For buildings that existing services are relocated for the project, arrange with utility company, Owner, and existing users for time when service can be interrupted, if necessary, to make connections for temporary services. Keep the temporary service in place until the work on the building has been completed and then transfer back to the final connections.

B. Sanitary Facilities: Provide temporary toilets, wash facilities, and drinking water for use of construction personnel. Comply with requirements of authorities having jurisdiction for type, number, location, operation, and maintenance of fixtures and facilities.

C. Heating and Cooling: Provide temporary heating and cooling required by construction activities for curing or drying of completed installations or for protecting existing building and installed construction from adverse effects of low temperatures.
1. Temporary Construction Enclosures: Contractor shall provide and pay for heating devices and temporary heat required to maintain specified conditions of temporary

enclosures. Select equipment that will not have a harmful effect on existing installations, elements being installed, or completed construction.

D. Isolation of Work Areas in Occupied Facilities: Prevent dust, fumes, and odors from entering occupied areas.
   1. Maintain dust partitions during the Work. Use vacuum collection attachments on dust-producing equipment. Isolate limited work within occupied areas using portable dust containment devices.
   2. Perform daily construction cleanup and final cleanup using approved, HEPA-filter-equipped vacuum equipment.

E. Ventilation and Humidity Control: Provide temporary ventilation required by construction activities for curing or drying of completed installations or for protecting installed construction from adverse effects of high humidity. Select equipment that will not have a harmful effect on completed installations or elements being installed. Coordinate ventilation requirements to produce ambient condition required and minimize energy consumption.
   1. Provide dehumidification systems when required to reduce substrate moisture levels to level required to allow installation or application of finishes.

F. Electric Power Service: Provide electric power service and distribution system of sufficient size, capacity, and power characteristics required for construction operations.

G. Lighting: Provide temporary lighting with local switching that provides adequate illumination for construction operations, observations, inspections, and traffic conditions.
   1. Install and operate temporary lighting that fulfills security and protection requirements without operating entire system.

H. Telephone Service: Provide temporary telephone service in common-use facilities for use by all construction personnel. Install one telephone line(s) for each field office.
   1. Provide additional telephone lines for the following:
      a. Provide a dedicated telephone line for each facsimile machine in each field office.
   2. At each telephone, post a list of important telephone numbers.
      a. Police and fire departments.
      b. Ambulance service.
      c. Contractor's home office.
      d. Architect's office.
      e. Engineers' offices.
      f. Owner's office.
      g. Principal subcontractors' field and home offices.
   3. Provide superintendent with cellular telephone or portable two-way radio for use when away from field office.

3.3 SUPPORT FACILITIES INSTALLATION

A. General: Comply with the following:
   1. Provide construction for temporary offices, shops, and sheds located within construction area or within 30 feet of building lines that is noncombustible according to ASTM E 136. Comply with NFPA 241.
   2. Maintain support facilities until Architect schedules Substantial Completion inspection. Remove before Substantial Completion.

B. Traffic Controls: Comply with requirements of authorities having jurisdiction.
   1. Protect existing site improvements to remain including curbs, pavement, and utilities.
   2. Maintain access for fire-fighting equipment and access to fire hydrants.

3. Signs, Signals, And Devices: Furnish, erect and maintain all signs, barricades, fencing, and other devices necessary to adequately mark and protect the construction area. Flashing lights shall be provided for nighttime marking.
   a. Post Mounted and Wall Mounted Traffic Control and Informational Signs: As approved by authority having jurisdiction.
   b. Traffic Control Signals: As approved by local jurisdictions.
   c. Traffic Cones and Drums, Flares and Lights: As approved by authority having jurisdiction.
4. Flashing Lights: Use flashing lights during hours of low visibility and at night to delineate traffic obstructions, closings, traffic lanes and to warn and guide traffic.
5. Flag Persons: Provide trained and equipped flag persons to regulate traffic when construction operations or traffic encroach on public traffic lanes.
   a. Flagperson Equipment: As required by authority having jurisdiction.
6. Haul Routes:
   a. Consult with authority having jurisdiction, establish public thoroughfares to be used for haul routes and site access.
   b. Confine construction traffic to designated haul routes.
   c. Provide traffic control at critical areas of haul routes to regulate traffic, to minimize interference with public traffic.
7. Traffic Signs And Signals:
   a. Provide signs at approaches to site and on site, at crossroads, detours, parking areas, and elsewhere as needed to direct construction and affected public traffic.
   b. Relocate as Work progresses, to maintain effective traffic control.
8. Removal:
   a. Remove equipment and devices when no longer required.
   b. Repair damage caused by installation.

C. Parking: Provide temporary parking areas for construction personnel.

D. Project Signs:
1. Unauthorized signs are not permitted.
2. CDBG Program Identification Sign: Provide 4' x 8' x 3/4-inch, post-mounted structural panel, custom-painted Project sign with graphics and of design in compliance with signage requirements.

3. Temporary Signs: Provide other temporary informational, safety, and traffic signs as required to control site traffic and building access for construction personnel and public at Project site.
4. Relocate project signs as Work progresses to maintain effective control.
5. Maintain and touchup signs so they are legible at all times.
6. Removal: Remove signs, framing, supports, and foundations at completion of Project and restore area.

E. Dewatering Facilities and Drains: Comply with requirements of authorities having jurisdiction. Maintain Project site, excavations, and construction free of water.
1. Dispose of rainwater in a lawful manner that will not result in flooding Project or adjoining properties nor endanger permanent Work or temporary facilities.
2. Remove snow and ice as required to minimize accumulations.

F. Waste Disposal Facilities: Provide waste-collection containers in sizes adequate to handle waste from construction operations. Comply with requirements of authorities having jurisdiction. Comply with Division 01 Section "Construction Waste Management and Disposal" for progress cleaning requirements.

G. Lifts and Hoists: Provide facilities necessary for hoisting materials and personnel.
1. Truck cranes and similar devices used for hoisting materials are considered "tools and equipment" and not temporary facilities.

3.4 SECURITY AND PROTECTION FACILITIES INSTALLATION

A. Temporary Erosion and Sedimentation Control: Provide measures to prevent soil erosion and discharge of soil-bearing water runoff and airborne dust to undisturbed areas and to adjacent properties and walkways, according to requirements of 2003 EPA Construction General Permit or authorities having jurisdiction, whichever is more stringent.
1. Verify that flows of water redirected from construction areas or generated by construction activity do not enter or cross tree- or plant- protection zones.
2. Clean, repair, and restore adjoining properties and roads affected by erosion and sedimentation from the project site during the course of the project.

B. Tree and Plant Protection: Install temporary fencing outside the drip line of trees to protect vegetation from damage from construction operations. Protect tree root systems from damage, flooding, and erosion.

C. Security Enclosure and Lockup: Install temporary enclosures around partially completed areas of construction. Provide lockable entrances to prevent unauthorized entrance, vandalism, theft, and similar violations of security. Lock entrances at end of each work day.

D. Barricades, Warning Signs, and Lights: Comply with requirements of authorities having jurisdiction for erecting structurally adequate barricades, including warning signs and lighting.

E. Temporary Enclosures: Provide temporary enclosures for protection of construction, in progress and completed, from exposure, foul weather, other construction operations, and similar activities. Provide temporary weathertight enclosure for building exterior.
1. Where heating or cooling is needed and permanent enclosure is not complete, insulate temporary enclosures.

F. Temporary Enclosures, Security; where indicated on the Drawings: Provide temporary enclosures for protection of tenant interiors, including wares, goods, and materials stored or displayed within, in progress and completed; protect from vandals and theft.

1. Secure temporary openings with exterior grade plywood (minimum 3/4” thick); minimum 2x4 wood studs; round head carriage bolts (3/8” minimum diameter, head oriented to the exterior face). OSB and particle board are not permitted. Exposed screws may be used where unauthorized removal would not affect overall security.
2. Recycled or salvaged materials may be used. Contractor shall retain ownership of materials after the temporary use.
3. Existing and new construction shall be undamaged by the temporary enclosure means and methods. Repair any damage resulting from the installation and removal of the temporary enclosure components.

G. Temporary Fire Protection: Install and maintain temporary fire-protection facilities of types needed to protect against reasonably predictable and controllable fire losses. Comply with NFPA 241.
1. Prohibit smoking in construction areas.
2. Supervise welding operations, combustion-type temporary heating units, and similar sources of fire ignition according to requirements of authorities having jurisdiction.
3. Develop and supervise an overall fire-prevention and -protection program for personnel at Project site. Review needs with local fire department and establish procedures to be followed. Instruct personnel in methods and procedures. Post warnings and information.

3.5 MOISTURE AND MOLD CONTROL

A. Contractor's Moisture-Protection Plan: Avoid trapping water in finished work. Document visible signs of mold that may appear during construction.

B. Exposed Construction Phase: Before installation of weather barriers, when materials are subject to wetting and exposure and to airborne mold spores, protect as follows:
1. Protect porous materials from water damage.
2. Protect stored and installed material from flowing or standing water.
3. Keep porous and organic materials from coming into prolonged contact with concrete.
4. Remove standing water from decks.
5. Keep deck openings covered or dammed.

C. Partially Enclosed Construction Phase: After installation of weather barriers but before full enclosure and conditioning of building, when installed materials are still subject to infiltration of moisture and ambient mold spores, protect as follows:
1. Do not load or install drywall or other porous materials or components, or items with high organic content, into partially enclosed building.
2. Keep interior spaces reasonably clean and protected from water damage.
3. Periodically collect and remove waste containing cellulose or other organic matter.
4. Discard or replace water-damaged material.
5. Do not install material that is wet.
6. Discard, replace or clean stored or installed material that begins to grow mold.
7. Perform work in a sequence that allows any wet materials adequate time to dry before enclosing the material in drywall or other interior finishes.

3.6 OPERATION, TERMINATION, AND REMOVAL

A. Supervision: Enforce strict discipline in use of temporary facilities. To minimize waste and abuse, limit availability of temporary facilities to essential and intended uses.

B. Maintenance: Maintain facilities in good operating condition until removal.
1. Maintain operation of temporary enclosures, heating, cooling, humidity control, ventilation, and similar facilities on a 24-hour basis where required to achieve indicated results and to avoid possibility of damage.

C. Temporary Facility Changeover: Do not change over from using temporary security and protection facilities to permanent facilities until Substantial Completion.

D. Termination and Removal: Remove each temporary facility when need for its service has ended, when it has been replaced by authorized use of a permanent facility, or no later than Substantial Completion. Complete or, if necessary, restore permanent construction that may have been delayed because of interference with temporary facility. Repair damaged Work, clean exposed surfaces, and replace construction that cannot be satisfactorily repaired.

1. Materials and facilities that constitute temporary facilities are property of Contractor. Owner reserves right to take possession of Project identification signs.
2. Remove temporary roads and paved areas not intended for or acceptable for integration into permanent construction. Where area is intended for landscape development, remove soil and aggregate fill that do not comply with requirements for fill or subsoil. Remove materials contaminated with road oil, asphalt and other petrochemical compounds, and other substances that might impair growth of plant materials or lawns. Repair or replace street paving, curbs, and sidewalks at temporary entrances, as required by authorities having jurisdiction.
3. At Substantial Completion, repair, renovate, and clean permanent facilities used during construction period. Comply with final cleaning requirements specified in Division 01 Section "Closeout Procedures."

END OF SECTION 01 50 00

SECTION 01 60 00 - PRODUCT REQUIREMENTS

PART 1 - GENERAL

1.1 RELATED DOCUMENTS

A. Drawings and general provisions of the Contract, including General and Supplementary Conditions and other Division 01 Specification Sections, apply to this Section.

1.2 SUMMARY

A. Section includes administrative and procedural requirements for selection of products for use in Project; product delivery, storage, and handling; manufacturers' standard warranties on products; special warranties; and comparable products.

B. Related Sections:
   1. Division 01 Section "Alternates" for products selected under an alternate.
   2. Division 01 Section "Substitution Procedures" for requests for substitutions.
   3. Division 01 Section "References" for applicable industry standards for products specified.

1.3 DEFINITIONS

A. Products: Items obtained for incorporating into the Work, whether purchased for Project or taken from previously purchased stock. The term "product" includes the terms "material," "equipment," "system," and terms of similar intent.
   1. Named Products: Items identified by manufacturer's product name, including make or model number or other designation shown or listed in manufacturer's published product literature, which is current as of date of the Contract Documents.
   2. New Products: Items that have not previously been incorporated into another project or facility. Products salvaged or recycled from other projects are not considered new products.
   3. Comparable Product: Product that is demonstrated and approved through submittal process to have the indicated qualities related to type, function, dimension, in-service performance, physical properties, appearance, and other characteristics that equal or exceed those of specified product.

B. Basis-of-Design Product Specification: A specification in which a specific manufacturer's product is named and accompanied by the words "basis-of-design product," including make or model number or other designation, to establish the significant qualities related to type, function, dimension, in-service performance, physical properties, appearance, and other characteristics for purposes of evaluating comparable products of additional manufacturers named in the specification.

1.4 ACTION SUBMITTALS

A. Comparable Product Requests: Submit request for consideration of each comparable product. Identify product or fabrication or installation method to be replaced. Include Specification Section number and title and Drawing numbers and titles.
   1. Include data to indicate compliance with the requirements specified in "Comparable Products" Article.
   2. Architect's Action: If necessary, Architect will request additional information or documentation for evaluation within one week of receipt of a comparable product request. Architect will notify Contractor of approval or rejection of proposed comparable product

request within 15 days of receipt of request, or seven days of receipt of additional information or documentation, whichever is later.

a. Form of Approval: As specified in Division 01 Section "Submittal Procedures."

b. Use product specified if Architect does not issue a decision on use of a comparable product request within time allocated.

B. Basis-of-Design Product Specification Submittal: Comply with requirements in Division 01 Section "Submittal Procedures." Show compliance with requirements.

1.5 QUALITY ASSURANCE

A. Compatibility of Options: If Contractor is given option of selecting between two or more products for use on Project, select product compatible with products previously selected, even if previously selected products were also options.

1.6 PRODUCT DELIVERY, STORAGE, AND HANDLING

A. Deliver, store, and handle products using means and methods that will prevent damage, deterioration, and loss, including theft and vandalism. Comply with manufacturer's written instructions.

B. Delivery and Handling:

1. Schedule delivery to minimize long-term storage at Project site and to prevent overcrowding of construction spaces.
2. Coordinate delivery with installation time to ensure minimum holding time for items that are flammable, hazardous, easily damaged, or sensitive to deterioration, theft, and other losses.
3. Deliver products to Project site in an undamaged condition in manufacturer's original sealed container or other packaging system, complete with labels and instructions for handling, storing, unpacking, protecting, and installing.
4. Inspect products on delivery to determine compliance with the Contract Documents and to determine that products are undamaged and properly protected.

C. Storage:

1. Store products to allow for inspection and measurement of quantity or counting of units.
2. Store materials in a manner that will not endanger Project structure.
3. Store products that are subject to damage by the elements, under cover in a weathertight enclosure above ground, with ventilation adequate to prevent condensation.
4. Store foam plastic from exposure to sunlight, except to extent necessary for period of installation and concealment.
5. Comply with product manufacturer's written instructions for temperature, humidity, ventilation, and weather-protection requirements for storage.
6. Protect stored products from damage and liquids from freezing.

1.7 PRODUCT WARRANTIES

A. Warranties specified in other Sections shall be in addition to, and run concurrent with, other warranties required by the Contract Documents. Manufacturer's disclaimers and limitations on product warranties do not relieve Contractor of obligations under requirements of the Contract Documents.

1. Manufacturer's Warranty: Written warranty furnished by individual manufacturer for a particular product and specifically endorsed by manufacturer to Owner.
2. Special Warranty: Written warranty required by the Contract Documents to provide specific rights for Owner.

B. Special Warranties: Prepare a written document that contains appropriate terms and identification, ready for execution.
   1. Manufacturer's Standard Form: Modified to include Project-specific information and properly executed.
   2. Specified Form: When specified forms are included with the Specifications, prepare a written document using indicated form properly executed.
   3. Refer to Divisions 02 through 49. Sections for specific content requirements and particular requirements for submitting special warranties.

C. Submittal Time: Comply with requirements in Division 01 Section "Closeout Procedures."

PART 2 - PRODUCTS

2.1 PRODUCT SELECTION PROCEDURES

A. General Product Requirements: Provide products that comply with the Contract Documents, are undamaged and, unless otherwise indicated, are new at time of installation.
   1. Provide products complete with accessories, trim, finish, fasteners, and other items needed for a complete installation and indicated use and effect.
   2. Standard Products: If available, and unless custom products or nonstandard options are specified, provide standard products of types that have been produced and used successfully in similar situations on other projects.
   3. Owner reserves the right to limit selection to products with warranties not in conflict with requirements of the Contract Documents.
   4. Where products are accompanied by the term "as selected," Architect will make selection.
   5. Descriptive, performance, and reference standard requirements in the Specifications establish salient characteristics of products.
   6. Or Equal: For products specified by name and accompanied by the term "or equal," or "or approved equal," or "or approved equivalent," comply with requirements in Division 01 Section "Procurement Substitution Procedures" to obtain approval for use of an unnamed product. “Or Equal” Product substitution requests will not be considered after receipt of bids.

B. Product Selection Procedures:
   1. Products: Where Specifications list a one or several manufacturers and products, provide one of the named products that comply with requirements. Comparable products or substitutions for Contractor's convenience will not be considered.
   2. Manufacturers: Where Specifications include a list of manufacturers' names, provide a product by one of the manufacturers listed that complies with requirements. Comparable products or substitutions for Contractor's convenience will not be considered.
   3. Basis-of-Design Product: Where Specifications name a product, or refer to a product indicated on Drawings, and include a list of manufacturers, provide the specified or indicated product or a comparable product by one of the other named manufacturers. Drawings and Specifications indicate sizes, profiles, dimensions, and other characteristics that are based on the product named. Comply with requirements in "Comparable Products" Article for consideration of an unnamed product by one of the other named manufacturers.

C. Visual Matching Specification: Where Specifications require "match Architect's sample", provide a product that complies with requirements and matches Architect's sample. Architect's decision will be final on whether a proposed product matches.
   1. If no product available within specified category matches and complies with other specified requirements, comply with requirements in Division 01 Section "Substitution Procedures" for proposal of product.

D. Visual Selection Specification: Where Specifications include the phrase "as selected by Architect from manufacturer's full range" or similar phrase, select a product that complies with requirements. Architect will select color, gloss, pattern, density, or texture from manufacturer's product line that includes both standard and premium items.

2.2 COMPARABLE PRODUCTS

A. Conditions for Consideration: Architect will consider Contractor's request for comparable product when the following conditions are satisfied. If the following conditions are not satisfied, Architect may return requests without action, except to record noncompliance with these requirements:
   1. Evidence that the proposed product does not require revisions to the Contract Documents, which it is consistent with the Contract Documents and will produce the indicated results, and that it is compatible with other portions of the Work.
   2. Detailed comparison of significant qualities of proposed product with those named in the Specifications. Significant qualities include attributes such as performance, weight, size, durability, visual effect, and specific features and requirements indicated.
   3. Evidence that proposed product provides specified warranty.
   4. List of similar installations for completed projects with project names and addresses and names and addresses of architects and owners, if requested.
   5. Samples, if requested.

PART 3 - EXECUTION (Not Used)

END OF SECTION 01 60 00

SECTION 01 73 00 - EXECUTION

PART 1 - GENERAL

1.1 SUMMARY

A. Section includes general administrative and procedural requirements governing execution of the Work including, but not limited to, the following:
   1. Construction layout.
   2. Field engineering and surveying.
   3. Installation of the Work.
   4. Cutting and patching.
   5. Coordination of Owner-installed products.
   6. Progress cleaning.
   7. Protection of installed construction.
   8. Correction of the Work.

B. Related Sections:
   1. Division 02 Section "Selective Structure Demolition" for demolition and removal of selected portions of the building.

1.2 DEFINITIONS

A. Cutting: Removal of in-place construction necessary to permit installation or performance of other work.

B. Patching: Fitting and repair work required to restore construction to original conditions after installation of other work.

1.3 INFORMATIONAL SUBMITTALS

A. Landfill Receipts: Submit copy of receipts issued by a landfill facility, licensed to accept hazardous materials, for hazardous waste disposal.

1.4 QUALITY ASSURANCE

A. Cutting and Patching: Comply with requirements for and limitations on cutting and patching of construction elements.
   1. Structural Elements: When cutting and patching structural elements, notify Architect of locations and details of cutting and await directions from the Architect before proceeding. Shore, brace, and support structural element during cutting and patching. Do not cut and patch structural elements in a manner that could change their load-carrying capacity or increase deflection
   2. Operational Elements: Do not cut and patch operating elements and related components in a manner that results in reducing their capacity to perform as intended or that results in increased maintenance or decreased operational life or safety. Operational elements include the following:
      a. Primary operational systems and equipment.
      b. Fire separation assemblies.
      c. Air or smoke barriers.
      d. Fire-suppression systems.
      e. Mechanical systems piping and ducts.
      f. Control systems.
      g. Communication systems.

h. Conveying systems.
i. Electrical wiring systems.
j. Operating systems of special construction.

3. Other Construction Elements: Do not cut and patch other construction elements or components in a manner that could change their load-carrying capacity, that results in reducing their capacity to perform as intended, or that results in increased maintenance or decreased operational life or safety. Other construction elements include but are not limited to the following:
   a. Water, moisture, or vapor barriers.
   b. Membranes and flashings.
   c. Exterior curtain-wall construction.
   d. Equipment supports.
   e. Piping, ductwork, vessels, and equipment.
   f. Noise- and vibration-control elements and systems.
4. Visual Elements: Do not cut and patch construction in a manner that results in visual evidence of cutting and patching. Do not cut and patch exposed construction in a manner that would, in Architect's opinion, reduce the building's aesthetic qualities. Remove and replace construction that has been cut and patched in a visually unsatisfactory manner.

B. Cutting and Patching Conference: Before proceeding, meet at Project site with parties involved in cutting and patching, including mechanical and electrical trades. Review areas of potential interference and conflict. Coordinate procedures and resolve potential conflicts before proceeding.

C. Manufacturer's Installation Instructions: Obtain and maintain on-site manufacturer's written recommendations and instructions for installation of products and equipment.

1.5 WARRANTY

A. Existing Warranties: Remove, replace, patch, and repair materials and surfaces cut or damaged during installation or cutting and patching operations, by methods and with materials so as not to void existing warranties.

PART 2 - PRODUCTS

2.1 MATERIALS

A. General: Comply with requirements specified in other Sections.

B. In-Place Materials: Use materials for patching identical to in-place materials. For exposed surfaces, use materials that visually match in-place adjacent surfaces to the fullest extent possible.
   1. If identical materials are unavailable or cannot be used, use materials that, when installed, will provide a match acceptable to the Architect for the visual and functional performance of in-place materials.

PART 3 - EXECUTION

3.1 EXAMINATION

A. Existing Conditions: The existence and location of underground and other utilities and construction indicated as existing are not guaranteed. Before beginning sitework, investigate and verify the existence and location of underground utilities, mechanical and electrical systems, and other construction affecting the Work.

1. Before construction, verify the location and invert elevation at points of connection of sanitary sewer, storm sewer, and water-service piping; underground electrical services, and other utilities.
2. Furnish location data for work related to Project that must be performed by public utilities serving Project site.

B. Examination and Acceptance of Conditions: Before proceeding with each component of the Work, examine substrates, areas, and conditions, with Installer or Applicator present where indicated, for compliance with requirements for installation tolerances and other conditions affecting performance. Record observations.
1. Written Report: Where a written report listing conditions detrimental to performance of the Work is required by other Sections, include the following:
   a. Description of the Work.
   b. List of detrimental conditions, including substrates.
   c. List of unacceptable installation tolerances.
   d. Recommended corrections.
2. Verify compatibility with and suitability of substrates, including compatibility with existing finishes or primers.
3. Examine roughing-in for mechanical and electrical systems to verify actual locations of connections before equipment and fixture installation.
4. Examine walls, floors, and roofs for suitable conditions where products and systems are to be installed.
5. Proceed with installation only after unsatisfactory conditions have been corrected. Proceeding with the Work indicates acceptance of surfaces and conditions.

3.2 PREPARATION

A. Existing Utility Information: Furnish information to local utility that is necessary to adjust, move, or relocate existing utility structures, utility poles, lines, services, or other utility appurtenances located in or affected by construction. Coordinate with authorities having jurisdiction.

B. Field Measurements: Take field measurements as required to fit the Work properly. Recheck measurements before installing each product. Where portions of the Work are indicated to fit to other construction, verify dimensions of other construction by field measurements before fabrication. Coordinate fabrication schedule with construction progress to avoid delaying the Work.

C. Space Requirements: Verify space requirements and dimensions of items shown diagrammatically on Drawings.

D. Review of Contract Documents and Field Conditions: Immediately on discovery of the need for clarification of the Contract Documents caused by differing field conditions outside the control of the Contractor, submit a request for information to Architect according to requirements in Division 01 Section "Project Management and Coordination."

3.3 CONSTRUCTION LAYOUT

A. Verification: Before proceeding to lay out the Work, verify layout information shown on Drawings, in relation to the property survey and existing benchmarks. If discrepancies are discovered, notify Architect promptly.

B. General: Engage a land surveyor to lay out the Work using accepted surveying practices.
1. Establish benchmarks and control points to set lines and levels at each story of construction and elsewhere as needed to locate each element of Project.

2. Establish dimensions within tolerances indicated. Do not scale Drawings to obtain required dimensions.
3. Inform installers of lines and levels to which they must comply.
4. Check the location, level and plumb, of every major element as the Work progresses.
5. Notify Architect when deviations from required lines and levels exceed allowable tolerances.
6. Close site surveys with an error of closure equal to or less than the standard established by authorities having jurisdiction.

C. Site Improvements: Locate and lay out site improvements, including pavements, grading, fill and topsoil placement, utility slopes, and rim and invert elevations.

D. Building Lines and Levels: Locate and lay out control lines and levels for structures, building foundations, column grids, and floor levels, including those required for mechanical and electrical work. Transfer survey markings and elevations for use with control lines and levels. Level foundations and piers from two or more locations.

E. Record Log: Maintain a log of layout control work. Record deviations from required lines and levels. Include beginning and ending dates and times of surveys, weather conditions, name and duty of each survey party member, and types of instruments and tapes used. Make the log available for reference by Architect.

3.4 FIELD ENGINEERING

A. Identification: Owner will identify existing benchmarks, control points, and property corners.

B. Reference Points: Locate existing permanent benchmarks, control points, and similar reference points before beginning the Work. Preserve and protect permanent benchmarks and control points during construction operations.
1. Do not change or relocate existing benchmarks or control points without prior written approval of Architect. Report lost or destroyed permanent benchmarks or control points promptly. Report the need to relocate permanent benchmarks or control points to Architect before proceeding.
2. Replace lost or destroyed permanent benchmarks and control points promptly. Base replacements on the original survey control points.

C. Benchmarks: Establish and maintain a minimum of two permanent benchmarks on Project site, referenced to data established by survey control points. Comply with authorities having jurisdiction for type and size of benchmark.
1. Record benchmark locations, with horizontal and vertical data, on Project Record Documents.
2. Where the actual location or elevation of layout points cannot be marked, provide temporary reference points sufficient to locate the Work.
3. Remove temporary reference points when no longer needed. Restore marked construction to its original condition.

3.5 INSTALLATION

A. General: Locate the Work and components of the Work accurately, in correct alignment and elevation, as indicated.
1. Make vertical work plumb and make horizontal work level.
2. Where space is limited, install components to maximize space available for maintenance and ease of removal for replacement.
3. Conceal pipes, ducts, and wiring in finished areas, unless otherwise indicated.

4. Maintain minimum headroom clearance of 96 inches in occupied spaces and 90 inches in unoccupied spaces.

B. Comply with manufacturer's written instructions and recommendations for installing products in applications indicated.

C. Install products at the time and under conditions that will ensure the best possible results. Maintain conditions required for product performance until Substantial Completion.

D. Conduct construction operations so no part of the Work is subjected to damaging operations or loading in excess of that expected during normal conditions of occupancy.

E. Tools and Equipment: Do not use tools or equipment that produce harmful noise levels.

F. Templates: Obtain and distribute to the parties involved templates for work specified to be factory prepared and field installed. Check Shop Drawings of other work to confirm that adequate provisions are made for locating and installing products to comply with indicated requirements.

G. Attachment: Provide blocking and attachment plates and anchors and fasteners of adequate size and number to securely anchor each component in place, accurately located and aligned with other portions of the Work. Where size and type of attachments are not indicated, verify size and type required for load conditions.
   1. Mounting Heights: Where mounting heights are not indicated, mount components at heights directed by Architect.
   2. Allow for building movement, including thermal expansion and contraction.
   3. Coordinate installation of anchorages. Furnish setting drawings, templates, and directions for installing anchorages, including sleeves, concrete inserts, anchor bolts, and items with integral anchors, that are to be embedded in concrete or masonry. Deliver such items to Project site in time for installation.

H. Joints: Make joints of uniform width. Where joint locations in exposed work are not indicated, arrange joints for the best visual effect. Fit exposed connections together to form hairline joints.

I. Hazardous Materials: Use products, cleaners, and installation materials that are not considered hazardous.

3.6 CUTTING AND PATCHING

A. Cutting and Patching, General: Employ skilled workers to perform cutting and patching. Proceed with cutting and patching at the earliest feasible time, and complete without delay.
   1. Cut in-place construction to provide for installation of other components or performance of other construction, and subsequently patch as required to restore surfaces to their original condition.

B. Temporary Support: Provide temporary support of work to be cut.

C. Protection: Protect in-place construction during cutting and patching to prevent damage. Provide protection from adverse weather conditions for portions of Project that might be exposed during cutting and patching operations.

D. Adjacent Occupied Areas: Where interference with use of adjoining areas or interruption of free passage to adjoining areas is unavoidable, coordinate cutting and patching in accordance with requirements of Division 01 Section "Summary."

E. Existing Utility Services and Mechanical/Electrical Systems: Where existing services/systems are required to be removed, relocated, or abandoned, bypass such services/systems before cutting to minimize interruption to occupied areas.

F. Cutting: Cut in-place construction by sawing, drilling, breaking, chipping, grinding, and similar operations, including excavation, using methods least likely to damage elements retained or adjoining construction. If possible, review proposed procedures with original Installer; comply with original Installer's written recommendations.
   1. In general, use hand or small power tools designed for sawing and grinding, not hammering and chopping. Cut holes and slots neatly to minimum size required, and with minimum disturbance of adjacent surfaces. Temporarily cover openings when not in use.
   2. Finished Surfaces: Cut or drill from the exposed or finished side into concealed surfaces.
   3. Concrete and Masonry: Cut using a cutting machine, such as an abrasive saw or a diamond-core drill.
   4. Excavating and Backfilling: Comply with requirements in applicable Division 31 Sections where required by cutting and patching operations.
   5. Mechanical and Electrical Services: Cut off pipe or conduit in walls or partitions to be removed. Cap, valve, or plug and seal remaining portion of pipe or conduit to prevent entrance of moisture or other foreign matter after cutting.
   6. Proceed with patching after construction operations requiring cutting are complete.

G. Patching: Patch construction by filling, repairing, refinishing, closing up, and similar operations following performance of other work. Patch with durable seams that are as invisible as practicable. Provide materials and comply with installation requirements specified in other Sections, where applicable.
   1. Inspection: Where feasible, test and inspect patched areas after completion to demonstrate physical integrity of installation.
   2. Exposed Finishes: Restore exposed finishes of patched areas and extend finish restoration into retained adjoining construction in a manner that will minimize evidence of patching and refinishing.
      a. Clean piping, conduit, and similar features before applying paint or other finishing materials.
      b. Restore damaged pipe covering to its original condition.
   3. Floors and Walls: Where walls or partitions that are removed extend one finished area into another, patch and repair floor and wall surfaces in the new space. Provide an even surface of uniform finish, color, texture, and appearance. Remove in-place floor and wall coverings and replace with new materials, if necessary, to achieve uniform color and appearance.
      a. Where patching occurs in a painted surface, prepare substrate and apply primer and intermediate paint coats appropriate for substrate over the patch, and apply final paint coat over entire unbroken surface containing the patch. Provide additional coats until patch blends with adjacent surfaces.
   4. Ceilings: Patch, repair, or rehang in-place ceilings as necessary to provide an even-plane surface of uniform appearance.
   5. Exterior Building Enclosure: Patch components in a manner that restores enclosure to a weathertight condition.

H. Cleaning: Clean areas and spaces where cutting and patching are performed. Remove paint, mortar, oils, putty, and similar materials from adjacent finished surfaces.

3.7 OWNER-INSTALLED PRODUCTS

A. Site Access: Provide access to Project site for Owner's construction personnel.

B. Coordination: Coordinate construction and operations of the Work with work performed by Owner's construction personnel.
   1. Construction Schedule: Inform Owner of Contractor's preferred construction schedule for Owner's portion of the Work. Adjust construction schedule based on a mutually agreeable timetable. Notify Owner if changes to schedule are required due to differences in actual construction progress.
   2. Pre-installation Conferences: Include Owner's construction personnel at pre-installation conferences covering portions of the Work that are to receive Owner's work. Attend pre-installation conferences conducted by Owner's construction personnel if portions of the Work depend on Owner's construction.

3.8 PROGRESS CLEANING

A. General: Clean Project site and work areas daily, including common areas. Enforce requirements strictly. Dispose of materials lawfully.
   1. Comply with requirements in NFPA 241 for removal of combustible waste materials and debris.
   2. Do not hold waste materials more than seven days during normal weather or three days if the temperature is expected to rise above 80° F.
   3. Containerize hazardous and unsanitary waste materials separately from other waste. Mark containers appropriately and dispose of legally, according to regulations.
      a. Utilize containers intended for holding waste materials of type to be stored.
   4. Coordinate progress cleaning for joint-use areas where more than one installer has worked.

B. Site: Maintain Project site free of waste materials and debris.

C. Work Areas: Clean areas where work is in progress to the level of cleanliness necessary for proper execution of the Work.
   1. Remove liquid spills promptly.
   2. Where dust would impair proper execution of the Work, broom-clean or vacuum the entire work area, as appropriate.

D. Installed Work: Keep installed work clean. Clean installed surfaces according to written instructions of manufacturer or fabricator of product installed, using only cleaning materials specifically recommended. If specific cleaning materials are not recommended, use cleaning materials that are not hazardous to health or property and that will not damage exposed surfaces.

E. Concealed Spaces: Remove debris from concealed spaces before enclosing the space.

F. Exposed Surfaces in Finished Areas: Clean exposed surfaces and protect as necessary to ensure freedom from damage and deterioration at time of Substantial Completion.

G. Waste Disposal: Do not bury or burn waste materials on-site. Do not wash waste materials down sewers or into waterways. Comply with waste disposal requirements in Division 01 Section "Construction Waste Management and Disposal."

H. During handling and installation, clean and protect construction in progress and adjoining materials already in place. Apply protective covering where required to ensure protection from damage or deterioration at Substantial Completion.

I. Clean and provide maintenance on completed construction as frequently as necessary through the remainder of the construction period. Adjust and lubricate operable components to ensure operability without damaging effects.

J. Limiting Exposures: Supervise construction operations to assure that no part of the construction, completed or in progress, is subject to harmful, dangerous, damaging, or otherwise deleterious exposure during the construction period.

3.9 PROTECTION OF INSTALLED CONSTRUCTION

A. Provide final protection and maintain conditions that ensure installed Work is without damage or deterioration at time of Substantial Completion.

B. Comply with manufacturer's written instructions for temperature and relative humidity.

3.10 CORRECTION OF THE WORK

A. Repair or remove and replace defective construction. Restore damaged substrates and finishes.
   1. Repairing includes replacing defective parts, refinishing damaged surfaces, touching up with matching materials, and properly adjusting operating equipment.

B. Restore permanent facilities used during construction to their specified condition.

C. Remove and replace damaged surfaces that are exposed to view if surfaces cannot be repaired without visible evidence of repair.

D. Repair components that do not operate properly. Remove and replace operating components that cannot be repaired.

E. Remove and replace chipped, scratched, and broken glass or reflective surfaces.

END OF SECTION 01 73 00

SECTION 01 74 19 - CONSTRUCTION WASTE MANAGEMENT AND DISPOSAL

PART 1 - GENERAL

1.1 RELATED DOCUMENTS

A. Drawings and general provisions of the Contract, including General and Supplementary Conditions and other Division 01 Specification Sections, apply to this Section.

1.2 SUMMARY

A. Section includes administrative and procedural requirements for the following:
   1. Salvaging nonhazardous demolition and construction waste.
   2. Recycling nonhazardous demolition and construction waste.
   3. Disposing of nonhazardous demolition and construction waste.

1.3 DEFINITIONS

A. Construction Waste: Building and site improvement materials and other solid waste resulting from construction, remodeling, renovation, or repair operations. Construction waste includes packaging.

B. Demolition Waste: Building and site improvement materials resulting from demolition or selective demolition operations.

C. Disposal: Removal off-site of demolition and construction waste and subsequent sale, recycling, reuse, or deposit in landfill or incinerator acceptable to authorities having jurisdiction.

D. Recycle: Recovery of demolition or construction waste for subsequent processing in preparation for reuse.

E. Salvage: Recovery of demolition or construction waste and subsequent sale or reuse in another facility.

F. Salvage and Reuse: Recovery of demolition or construction waste and subsequent incorporation into the Work.

1.4 ACTION SUBMITTALS

A. Waste Management Plan: Submit plan within 21 days of date established for the Notice of Award.

1.5 INFORMATIONAL SUBMITTALS

A. Waste Reduction Progress Reports: Concurrent with each Application for Payment, submit Waste Reduction Progress Report. Include the following information:
   1. Material category.
   2. Generation point of waste.
   3. Total quantity of waste in tons.
   4. Quantity of waste salvaged, both estimated and actual in tons.
   5. Quantity of waste recycled, both estimated and actual in tons.
   6. Total quantity of waste recovered (salvaged plus recycled) in tons.
   7. Total quantity of waste recovered (salvaged plus recycled) as a percentage of total waste.

B. Waste Reduction Calculations: Before request for Substantial Completion, submit calculated end-of-Project rates for salvage, recycling, and disposal as a percentage of total waste generated by the Work.

1.6 QUALITY ASSURANCE

A. Regulatory Requirements: Comply with hauling and disposal regulations of authorities having jurisdiction.

1.7 WASTE MANAGEMENT PLAN

A. General: Develop a waste management plan consisting of waste identification, waste reduction work plan, and cost/revenue analysis. Distinguish between demolition and construction waste. Indicate quantities by weight or volume but use same units of measure throughout waste management plan.

B. Waste Identification: Indicate anticipated types and quantities of demolition, site-clearing, and construction waste generated by the Work. Include estimated quantities and assumptions for estimates.

C. Waste Reduction Work Plan: List each type of waste and whether it will be salvaged, recycled, or disposed of in landfill or incinerator. Include points of waste generation, total quantity of each type of waste, quantity for each means of recovery, and handling and transportation procedures.
   1. Salvaged Materials for Reuse: For materials that will be salvaged and reused in this Project, describe methods for preparing salvaged materials before incorporation into the Work.
   2. Salvaged Materials for Sale: For materials that will be sold to individuals and organizations, include list of their names, addresses, and telephone numbers.
   3. Salvaged Materials for Donation: For materials that will be donated to individuals and organizations, include list of their names, addresses, and telephone numbers.
   4. Recycled Materials: Include list of local receivers and processors and type of recycled materials each will accept. Include names, addresses, and telephone numbers.
   5. Disposed Materials: Indicate how and where materials will be disposed of. Include name, address, and telephone number of each landfill and incinerator facility.
   6. Handling and Transportation Procedures: Include method that will be used for separating recyclable waste including sizes of containers, container labeling, and designated location where materials separation will be performed.

D. Cost/Revenue Analysis: Indicate total cost of waste disposal as if there was no waste management plan and net additional cost or net savings resulting from implementing waste management plan. Include the following:
   1. Total quantity of waste.
   2. Estimated cost of disposal (cost per unit). Include hauling and tipping fees and cost of collection containers for each type of waste.
   3. Total cost of disposal (with no waste management).
   4. Revenue from salvaged materials.
   5. Revenue from recycled materials.
   6. Savings in hauling and tipping fees by donating materials.
   7. Savings in hauling and tipping fees that are avoided.
   8. Handling and transportation costs. Include cost of collection containers for each type of waste.
   9. Net additional cost or net savings from waste management plan.

PART 2 - PRODUCTS (Not Used)

PART 3 - EXECUTION

3.1 PLAN IMPLEMENTATION

A. General: Implement approved waste management plan. Provide handling, containers, storage, signage, transportation, and other items as required to implement waste management plan during the entire duration of the Contract.
   1. Comply with operation, termination, and removal requirements in Section 01 50 00 "Temporary Facilities and Controls."

B. Training: Train workers, subcontractors, and suppliers on proper waste management procedures, as appropriate for the Work.
   1. Distribute waste management plan to everyone concerned within three days of submittal return.
   2. Distribute waste management plan to entities when they first begin work on-site. Review plan procedures and locations established for salvage, recycling, and disposal.

C. Site Access and Temporary Controls: Conduct waste management operations to ensure minimum interference with roads, streets, walks, walkways, and other adjacent occupied and used facilities.
   1. Designate and label specific areas on Project site necessary for separating materials that are to be salvaged, recycled, reused, donated, and sold.

3.2 SALVAGING DEMOLITION WASTE

A. Salvaged Items for Reuse in the Work: Salvage items for reuse and handle as follows:
   1. Clean salvaged items.
   2. Pack or crate items after cleaning. Identify contents of containers with label indicating elements, date of removal, quantity, and location where removed.
   3. Store items in a secure area until installation.
   4. Protect items from damage during transport and storage.
   5. Install salvaged items to comply with installation requirements for new materials and equipment. Provide connections, supports, and miscellaneous materials necessary to make items functional for use indicated.

B. Salvaged Items for Sale and Donation: Not permitted on Project sites.

C. Salvaged Items for Owner's Use: Salvage items for Owner's use and handle as follows:
   1. Clean salvaged items.
   2. Pack or crate items after cleaning. Identify contents of containers with label indicating elements, date of removal, quantity, and location where removed.
   3. Store items in a secure area until delivery to Owner.
   4. Transport items to Owner's storage area designated by Owner.
   5. Protect items from damage during transport and storage.

3.3 RECYCLING DEMOLITION AND CONSTRUCTION WASTE, GENERAL

A. General: Recycle paper and beverage containers used by on-site workers.

B. Recycling Receivers and Processors: Hyperlink below is provided for informational purposes only:
   1. DNR list of Iowa Construction and Demolition Debris Management Resources: http://www.iowadnr.gov/Environment/LandStewardship/WasteManagement/Recycling/ConstructionDemolition.aspx

C. Recycling Incentives: Revenues, savings, rebates, tax credits, and other incentives received for recycling waste materials shall accrue to Contractor.

D. Preparation of Waste: Prepare and maintain recyclable waste materials according to recycling or reuse facility requirements. Maintain materials free of dirt, adhesives, solvents, petroleum contamination, and other substances deleterious to the recycling process.

E. Procedures: Separate recyclable waste from other waste materials, trash, and debris. Separate recyclable waste by type at Project site to the maximum extent practical according to approved construction waste management plan.
   1. Provide appropriately marked containers or bins for controlling recyclable waste until removed from Project site. Include list of acceptable and unacceptable materials at each container and bin.
      a. Inspect containers and bins for contamination and remove contaminated materials if found.
   2. Stockpile processed materials on-site without intermixing with other materials. Place, grade, and shape stockpiles to drain surface water. Cover to prevent windblown dust.
   3. Stockpile materials away from construction area. Do not store within drip line of remaining trees.
   4. Store components off the ground and protect from the weather.
   5. Remove recyclable waste from Owner's property and transport to recycling receiver or processor.

3.4 RECYCLING DEMOLITION WASTE

A. Asphalt Paving: Break up and transport paving to asphalt-recycling facility.

B. Concrete: Remove reinforcement and other metals from concrete and sort with other metals.
   1. Pulverize concrete a size required by the company which will perform the recycling.

C. Piping: Reduce piping to straight lengths and store by type and size. Separate supports, hangers, valves, sprinklers, and other components by type and size.

D. Conduit: Reduce conduit to straight lengths and store by type and size.

3.5 RECYCLING CONSTRUCTION WASTE

A. Packaging:
   1. Cardboard and Boxes: Break down packaging into flat sheets. Bundle and store in a dry location.
   2. Polystyrene Packaging: Separate and bag materials.
   3. Pallets: As much as possible, require deliveries using pallets to remove pallets from Project site. For pallets that remain on-site, break down pallets into component wood pieces and comply with requirements for recycling wood.
   4. Crates: Break down crates into component wood pieces and comply with requirements for recycling wood.

B. Wood Materials:
   1. Clean Cut-Offs of Lumber: Grind or chip into small pieces.
   2. Clean Sawdust: Bag sawdust that does not contain painted or treated wood.
      a. Comply with requirements in Section 32 93 00 "Plants" for use of clean sawdust as organic mulch.

C. Gypsum Board: Comply with requirements of company which will perform the recycling.

3.6 DISPOSAL OF WASTE

A. General: Except for items or materials to be salvaged, recycled, or otherwise reused, remove waste materials from Project site and legally dispose of them in a landfill or incinerator acceptable to authorities having jurisdiction.
   1. Except as otherwise specified, do not allow waste materials that are to be disposed of accumulate on-site.
   2. Remove and transport debris in a manner that will prevent spillage on adjacent surfaces and areas.

B. Burning: Do not burn waste materials.

C. Disposal: Remove waste materials from Owner's property and legally dispose of them.

END OF SECTION 01 74 19

SECTION 01 77 00 - CLOSEOUT PROCEDURES

PART 1 - GENERAL

1.1 SUMMARY

A. Section includes administrative and procedural requirements for contract closeout, including, but not limited to, the following:
   1. Substantial Completion procedures.
   2. Final completion procedures.
   3. Warranties.
   4. Final cleaning.

B. Related Sections:
   1. Division 01 Section "Photographic Documentation" for submitting final completion construction photographic documentation.
   2. Division 01 Section "Execution" for progress cleaning of Project site.
   3. Division 01 Section "Operation and Maintenance Data" for operation and maintenance manual requirements.
   4. Division 01 Section "Project Record Documents" for submitting Record Drawings, Record Specifications, and Record Product Data.
   5. Division 01 Section "Demonstration and Training" for requirements for instructing Owner's personnel.
   6. Divisions 02 through 49 Sections for specific closeout and special cleaning requirements for the Work in those Sections.

1.2 SUBSTANTIAL COMPLETION

A. Preliminary Procedures: Before requesting inspection for determining date of Substantial Completion, complete the following. List items below that are incomplete with request.
   1. Prepare a list of items to be completed and corrected (punch list), the value of items on the list, and reasons why the Work is not complete.
   2. Advise Owner of pending insurance changeover requirements.
   3. Submit specific warranties, workmanship bonds, maintenance service agreements, final certifications, and similar documents.
   4. Obtain and submit releases permitting Owner unrestricted use of the Work and access to services and utilities. Include occupancy permits, operating certificates, and similar releases.
   5. Prepare and submit Project Record Documents, operation and maintenance manuals, final completion construction photographic documentation, damage or settlement surveys, property surveys, and similar final record information.
   6. Deliver tools, spare parts, extra materials, and similar items to location designated by Owner. Label with manufacturer's name and model number where applicable.
   7. Make final changeover of permanent locks and deliver keys to Owner. Advise Owner's personnel of changeover in security provisions.
   8. Complete startup testing of systems.
   9. Terminate and remove temporary facilities from Project site, along with mockups, construction tools, and similar elements.
   10. Submit changeover information related to Owner's occupancy, use, operation, and maintenance.
   11. Complete final cleaning requirements, including touchup painting.
   12. Touch up and otherwise repair and restore marred exposed finishes to eliminate visual defects.

B. Inspection: Submit a written request for inspection for Substantial Completion. On receipt of request, Architect will either proceed with inspection or notify Contractor of unfulfilled requirements. Architect will prepare the Certificate of Substantial Completion after inspection or will notify Contractor of items, either on Contractor's list or additional items identified by Architect, that must be completed or corrected before certificate will be issued.
   1. Reinspection: Request reinspection when the Work identified in previous inspections as incomplete is completed or corrected.
   2. Results of completed inspection will form the basis of requirements for final completion.

1.3 FINAL COMPLETION

A. Preliminary Procedures: Before requesting final inspection for determining final completion, complete the following:
   1. Submit a final Application for Payment according to Division 01 Section "Payment Procedures."
   2. Submit certified copy of Architect's Substantial Completion inspection list of items to be completed or corrected (punch list), endorsed and dated by Architect. The certified copy of the list shall state that each item has been completed or otherwise resolved for acceptance.
   3. Submit evidence of final, continuing insurance coverage complying with insurance requirements.
   4. Submit pest-control final inspection report and warranty.
   5. Instruct Owner's personnel in operation, adjustment, and maintenance of products, equipment, and systems.

B. Inspection: Submit a written request for final inspection for acceptance. On receipt of request, Architect will either proceed with inspection or notify Contractor of unfulfilled requirements. Architect will prepare a final Certificate for Payment after inspection or will notify Contractor of construction that must be completed or corrected before certificate will be issued.
   1. Reinspection: Request reinspection when the Work identified in previous inspections as incomplete is completed or corrected.

1.4 LIST OF INCOMPLETE ITEMS (PUNCH LIST)

A. Organization of List: Include name and identification of each space and area affected by construction operations for incomplete items and items needing correction including, if necessary, areas disturbed by Contractor that are outside the limits of construction.
   1. Organize list of spaces in sequential order, starting with exterior areas first and proceeding from lowest floor to highest floor.
   2. Organize items applying to each space by major element, including categories for ceiling, individual walls, floors, equipment, and building systems.
   3. Include the following information at the top of each page:
      a. Project name.
      b. Date.
      c. Name of Architect.
      d. Name of Contractor.
      e. Page number.
   4. Submit list of incomplete items in the following format:
      a. PDF electronic file.

1.5 WARRANTIES

A. Submittal Time: Submit written warranties on request of Architect for designated portions of the Work where commencement of warranties other than date of Substantial Completion is indicated.

B. Partial Occupancy: Submit properly executed warranties within 15 days of completion of designated portions of the Work that are completed and occupied or used by Owner during construction period by separate agreement with Contractor.

C. Organize warranty documents into an orderly sequence based on the table of contents of the Project Manual.
   1. Bind warranties and bonds in heavy-duty, three-ring, vinyl-covered, loose-leaf binders, thickness as necessary to accommodate contents, and sized to receive 8-1/2-by-11-inch paper.
   2. Provide heavy paper dividers with plastic-covered tabs for each separate warranty. Mark tab to identify the product or installation. Provide a typed description of the product or installation, including the name of the product and the name, address, and telephone number of Installer.
   3. Identify each binder on the front and spine with the typed or printed title "WARRANTIES," Project name, and name of Contractor.
   4. Scan warranties and bonds and assemble complete warranty and bond submittal package into a single indexed electronic PDF file with links enabling navigation to each item. Provide table of contents at beginning of document.

D. Provide additional copies of each warranty to include in operation and maintenance manuals.

PART 2 - PRODUCTS

2.1 MATERIALS

A. Cleaning Agents: Use cleaning materials and agents recommended by manufacturer or fabricator of the surface to be cleaned. Do not use cleaning agents that are potentially hazardous to health or property or that might damage finished surfaces.
   1. Use cleaning products that meet Green Seal GS-37, or if GS-37 is not applicable, use products that comply with the California Code of Regulations maximum allowable VOC levels.

PART 3 - EXECUTION

3.1 FINAL CLEANING

A. General: Perform final cleaning. Conduct cleaning and waste-removal operations to comply with local laws and ordinances and Federal and local environmental and antipollution regulations.

B. Cleaning: Employ experienced workers or professional cleaners for final cleaning. Clean each surface or unit to condition expected in an average commercial building cleaning and maintenance program. Comply with manufacturer's written instructions.
   1. Complete the following cleaning operations before requesting inspection for certification of Substantial Completion for entire Project or for a portion of Project:
      a. Clean Project site, yard, and grounds, in areas disturbed by construction activities, including landscape development areas, of rubbish, waste material, litter, and other foreign substances.
      b. Sweep paved areas broom clean. Remove petrochemical spills, stains, and other foreign deposits.
      c. Rake grounds that are neither planted nor paved to a smooth, even-textured surface.
      d. Remove tools, construction equipment, machinery, and surplus material from Project site.
      e. Remove snow and ice to provide safe access to building.

f. Clean exposed exterior and interior hard-surfaced finishes to a dirt-free condition, free of stains, films, and similar foreign substances. Avoid disturbing natural weathering of exterior surfaces. Restore reflective surfaces to their original condition.

g. Remove debris and surface dust from limited access spaces, including roofs, plenums, shafts, trenches, equipment vaults, manholes, attics, and similar spaces.

h. Sweep concrete floors broom clean in unoccupied spaces.

i. Vacuum carpet and similar soft surfaces, removing debris and excess nap; shampoo if visible soil or stains remain.

j. Clean transparent materials, including mirrors and glass in doors and windows. Remove glazing compounds and other noticeable, vision-obscuring materials. Replace chipped or broken glass and other damaged transparent materials. Polish mirrors and glass, taking care not to scratch surfaces.

k. Remove labels that are not permanent.

l. Touch up and otherwise repair and restore marred, exposed finishes and surfaces. Replace finishes and surfaces that cannot be satisfactorily repaired or restored or that already show evidence of repair or restoration.

   1) Do not paint over "UL" and other required labels and identification, including mechanical and electrical nameplates.

m. Replace parts subject to operating conditions during construction that may impede operation or reduce longevity.

n. Clean light fixtures, lamps, globes, and reflectors to function with full efficiency. Replace burned-out bulbs, and those noticeably dimmed by hours of use, and defective and noisy starters in fluorescent and mercury vapor fixtures to comply with requirements for new fixtures.

o. Leave Project clean and ready for occupancy.

END OF SECTION 01 77 00

SECTION 01 77 19 – CLOSEOUT REQUIREMENTS

The following list is general summary of closeout procedures in accordance with the Contract Documents. It is not intended to be all inclusive. Failure to list a closeout item in this summary does not relieve the Contractor of the requirements of the Contract Documents. Review the Project Manual thoroughly for closeout items. Some closeout items may be listed as secondary under a related heading.

Item	Description	Party	Date Complete
1	**Equipment Startup & Maintenance**		
1.1	Provide the Architect with seven days' notice to startup of equipment; Architect will attend start up when practical or required.	C	*Not Applicable.*
1.2	Perform start-up of all equipment and systems.	C	*Not Applicable.*
1.3	Submit written report that equipment or system has been properly installed, cleaned, tested, and adjusted, and is functioning properly.	C	*Not Applicable.*
1.4	Submit one copy of the Operation and Maintenance Manuals to Architect for review and comment.	C	
1.5	Provide demonstration and instruction to the Owner.	C, O	*Not Applicable.*
1.6	Architect returns the reviewed Operation and Maintenance Manuals within approximately one week after the Substantial Completion site visit, for making noted corrections.	A	
1.7	Submit the Final Operation and Maintenance (O & M) Manuals. Include Manufacturer's instructions for assembly, installation, and adjusting.	C	
1.8	Deliver maintenance materials, including spare parts, to designated storage location. Obtain receipt of delivery. Unless specified otherwise, the designated storage location is on site or at Owner's close by facility.	C	
2	**Punch List & Substantial Completion**		
2.1	Contactor self-performs Punch List and provides copy to the Architect, ahead of the request for the Architect's Substantial Completion site visit.	C	
2.2	Architect makes the Substantial Completion review site visit.	A	
2.3	Architect prepares the Substantial Completion Certificate and updated Punch List.	A	
2.4	Owner and Contractor sign the Certificate of Substantial Completion.	C, O	
3	**Inspections and Warranties**		
3.1	Provide submittals to Owner that are required by governing or other authorities. (inspection or safety certificates, certificate of occupancy, etc.)	C	
3.2	Submit Warranties (and Bonds, when required). All warranties shall be signed by the Contractor. Include subcontractor's signature when subcontractor Include subcontractor's signature when subcontractor shares responsibility.	C	

Item	Description	Party	Date Complete
4	**Closeout Documents**		
4.1	Provide the AIA-G706 - Contractor's Affidavit of Payment of Debts and Claims.	C	
4.2	Provide the AIA-G706A - Contractor's Affidavit of Release of Liens.	C	
4.3	Provide the AIA-G707 - Consent of Surety to Final Payment.	C	
4.4	Provide evidence that insurance is in force in accordance with A201-General Conditions Subparagraph 9.10.2.	C	
4.5	Provide State Tax Refund Form (Public or Private Not-for-Profit Owners)	C	*Not Applicable.*
5	**Record Documents**		
5.1	Provide Contract Drawings (As-builts) including all Addenda, Change Orders, ASI's, RFI's, and other changes posted.	C	
5.2	Provide Record Specifications.	C	
5.3	Provide copies of reviewed shop drawings and product data.	C	
6	**Final Documents**		
6.1	Contractor submits Final Punch List with all items marked "completed."	C	
6.2	Contractor submits written notice that the Work is fully completed and ready for Owner's Final Inspection. (Final Completion.)	C	
6.3	Contractor submits the Final Application for Payment and Retainage to the Architect for certification.	C	

A = Architect
O = Owner (City or individual building owners)
C = Contractor (General Contractor)

END OF SECTION 01 77 19

SECTION 01 78 23 - OPERATION AND MAINTENANCE DATA

PART 1 - GENERAL

1.1 SUMMARY

A. Section includes administrative and procedural requirements for preparing operation and maintenance manuals, including the following:
   1. Product maintenance manuals.

B. Related Sections:
   1. Division 01 Section "Submittal Procedures" for submitting copies of submittals for operation and maintenance manuals.
   2. Divisions 02 through 49 Sections for specific operation and maintenance manual requirements for the Work in those Sections.

1.2 CLOSEOUT SUBMITTALS

A. Manual Content: Operations and maintenance manual content is specified in individual specification sections to be reviewed at the time of Section submittals. Submit reviewed manual content formatted and organized as required by this Section.
   1. Where applicable, clarify and update reviewed manual content to correspond to modifications and field conditions.

B. Format: Submit operations and maintenance manuals in the following format:
   1. PDF electronic file. Assemble each manual into a composite electronically indexed file. Submit on digital media acceptable to Owner.
      a. Name each indexed document file in composite electronic index with applicable item name. Include a complete electronically linked operation and maintenance directory.
      b. Documentation Format: Searchable, Read-Only, Portable Document Format (PDF); electronically convert paper documents using Optical Character Recognition (OCR) software to enable search capabilities in Adobe Acrobat.

C. Initial Manual Submittal: Submit draft copy of each manual at least 15 days before requesting inspection for Substantial Completion. Architect and Owner will comment on whether general scope and content of manual are acceptable.

D. Final Manual Submittal: Submit each manual in final form prior to requesting inspection for Final Completion.
   1. Correct or modify each manual to comply with Architect's comments. Submit copies of each corrected manual within 15 days of receipt of Architect's comments and prior to commencing demonstration and training.
   2. Provide product maintenance manual (PDF format).
   3. Provide copy on CD, DVD, USB flash drive, or other common portable memory device for owner, upon request.

1.3 REQUIREMENTS FOR OPERATION AND MAINTENANCE MANUALS

A. Organization: Unless otherwise indicated, organize each manual into a separate section for each system and subsystem, and a separate section for each piece of equipment not part of a system. Each manual shall contain the following materials, in the order listed:
   1. Title page.
   2. Table of contents.

3. Manual contents.

B. Title Page: Include the following information:
1. Subject matter included in manual.
2. Name and address of Project.
3. Name and address of Owner.
4. Date of submittal.
5. Name and contact information for Contractor.
6. Name and contact information for Architect.
7. Names and contact information for major consultants to the Architect that designed the systems contained in the manuals.
8. Cross-reference to related systems in other operation and maintenance manuals.

C. Table of Contents: List each product included in manual, identified by product name, indexed to the content of the volume, and cross-referenced to Specification Section number in Project Manual.
1. If operation or maintenance documentation requires more than one volume to accommodate data, include comprehensive table of contents for all volumes in each volume of the set.

D. Manual Contents: Organize into sets of manageable size. Arrange contents alphabetically by system, subsystem, and equipment. If possible, assemble instructions for subsystems, equipment, and components of one system into a single binder.

E. Manuals, Electronic Files: Submit manuals in the form of a multiple file composite electronic PDF file for each manual type required.
1. Electronic Files: Use electronic files prepared by manufacturer where available. Where scanning of paper documents is required, configure scanned file for minimum readable file size.
2. File Names and Bookmarks: Enable bookmarking of individual documents based on file names. Name document files to correspond to system, subsystem, and equipment names used in manual directory and table of contents. Group documents for each system and subsystem into individual composite bookmarked files, then create composite manual, so that resulting bookmarks reflect the system, subsystem, and equipment names in a readily navigated file tree. Configure electronic manual to display bookmark panel on opening file.

1.4 PRODUCT MAINTENANCE MANUALS

A. Content: Organize manual into a separate section for each product, material, and finish. Include source information, product information, maintenance procedures, repair materials and sources, and warranties and bonds, as described below.

B. Source Information: List each product included in manual, identified by product name and arranged to match manual's table of contents. For each product, list name, address, and telephone number of Installer or supplier and maintenance service agent, and cross-reference Specification Section number and title in Project Manual and drawing or schedule designation or identifier where applicable.

C. Product Information: Include the following, as applicable:
1. Product name and model number.
2. Manufacturer's name.
3. Color, pattern, and texture.
4. Material and chemical composition.
5. Reordering information for specially manufactured products.

D. Maintenance Procedures: Include manufacturer's written recommendations and the following:
   1. Inspection procedures.
   2. Types of cleaning agents to be used and methods of cleaning.
   3. List of cleaning agents and methods of cleaning detrimental to product.
   4. Schedule for routine cleaning and maintenance.
   5. Repair instructions.

E. Repair Materials and Sources: Include lists of materials and local sources of materials and related services.

F. Warranties and Bonds: Include copies of warranties and bonds and lists of circumstances and conditions that would affect validity of warranties or bonds.
   1. Include procedures to follow and required notifications for warranty claims.

PART 2 - EXECUTION

2.1 MANUAL PREPARATION

A. Product Maintenance Manual: Assemble a complete set of maintenance data indicating care and maintenance of each product, material, and finish incorporated into the Work.

B. Manufacturers' Data: Where manuals contain manufacturers' standard printed data, include only sheets pertinent to product or component installed. Mark each sheet to identify each product or component incorporated into the Work. If data include more than one item in a tabular format, identify each item using appropriate references from the Contract Documents. Identify data applicable to the Work and delete references to information not applicable.
   1. Prepare supplementary text if manufacturers' standard printed data are not available and where the information is necessary for proper operation and maintenance of equipment or systems.

C. Comply with Division 01 Section "Closeout Procedures" for schedule for submitting operation and maintenance documentation.

END OF SECTION 01 78 23

SECTION 01 78 39 - PROJECT RECORD DOCUMENTS

PART 1 - GENERAL

1.1 SUMMARY

A. Section includes administrative and procedural requirements for project record documents, including the following:
   1. Record Drawings.
   2. Record Specifications.
   3. Record Product Data.
   4. Miscellaneous record submittals.

B. Related Sections:
   1. Division 01 Section "Execution" for final property survey.
   2. Division 01 Section "Closeout Procedures" for general closeout procedures.
   3. Division 01 Section "Operation and Maintenance Data" for operation and maintenance manual requirements.
   4. Divisions 02 through 49 Sections for specific requirements for project record documents of the Work in those Sections.

1.2 CLOSEOUT SUBMITTALS

A. Record Drawings: Comply with the following:
   1. Number of Copies: Submit one set(s) of marked-up record prints.

B. Record Specifications: Submit one paper copy of Project's Specifications, including addenda and contract modifications.

C. Record Product Data: Submit one paper copy of each submittal.
   1. Where record Product Data are required as part of operation and maintenance manuals, submit duplicate marked-up Product Data as a component of manual.

D. Miscellaneous Record Submittals: Refer to other Specification Sections for miscellaneous record-keeping requirements and submittals in connection with various construction activities. Submit one paper copy of each submittal.

E. PDF color scan(s) may be used in lieu of paper copy.

PART 2 - PRODUCTS

2.1 RECORD DRAWINGS

A. Record Prints: Maintain one set of marked-up paper copies of the Contract Drawings and Shop Drawings.
   1. Preparation: Mark record prints to show the actual installation where installation varies from that shown originally. Require individual or entity who obtained record data, whether individual or entity is Installer, subcontractor, or similar entity, to provide information for preparation of corresponding marked-up record prints.
      a. Give particular attention to information on concealed elements that would be difficult to identify or measure and record later.
      b. Accurately record information in an acceptable drawing technique.
      c. Record data as soon as possible after obtaining it.
      d. Record and check the markup before enclosing concealed installations.

e. Cross-reference record prints to corresponding archive photographic documentation.

2. Content: Types of items requiring marking include, but are not limited to, the following:
   a. Dimensional changes to Drawings.
   b. Revisions to details shown on Drawings.
   c. Depths of foundations below first floor.
   d. Locations and depths of underground utilities.
   e. Revisions to routing of piping and conduits.
   f. Revisions to electrical circuitry.
   g. Actual equipment locations.
   h. Duct size and routing.
   i. Locations of concealed internal utilities.
   j. Changes made by Change Order or Construction Change Directive.
   k. Changes made following Architect's written orders.
   l. Details not on the original Contract Drawings.
   m. Field records for variable and concealed conditions.
   n. Record information on the Work that is shown only schematically.
3. Mark the Contract Drawings and Shop Drawings completely and accurately. Utilize personnel proficient at recording graphic information in production of marked-up record prints.
4. Mark record sets with erasable, red-colored pencil. Use other colors to distinguish between changes for different categories of the Work at same location.
5. Mark important additional information that was either shown schematically or omitted from original Drawings.
6. Note Construction Change Directive numbers, alternate numbers, Change Order numbers, and similar identification, where applicable.

B. Format: Identify and date each record Drawing; include the designation "PROJECT RECORD DRAWING" in a prominent location.
   1. Record Prints: Organize record prints and newly prepared record Drawings into manageable sets. Bind each set with durable paper cover sheets. Include identification on cover sheets.
   2. Identification: As follows.
      a. Project name.
      b. Date.
      c. Designation "PROJECT RECORD DRAWINGS."
      d. Name of Architect.
      e. Name of Contractor.

2.2 RECORD SPECIFICATIONS

A. Preparation: Mark Specifications to indicate the actual product installation where installation varies from that indicated in Specifications, addenda, and contract modifications.
   1. Give particular attention to information on concealed products and installations that cannot be readily identified and recorded later.
   2. Mark copy with the proprietary name and model number of products, materials, and equipment furnished, including substitutions and product options selected.
   3. Record the name of manufacturer, supplier, Installer, and other information necessary to provide a record of selections made.
   4. For each principal product, indicate whether record Product Data has been submitted in operation and maintenance manuals instead of submitted as record Product Data.
   5. Note related Change Orders, record Product Data, and record Drawings where applicable.

B. Format: Submit record Specifications as paper copy.

2.3 RECORD PRODUCT DATA

A. Preparation: Mark Product Data to indicate the actual product installation where installation varies substantially from that indicated in Product Data submittal.
   1. Give particular attention to information on concealed products and installations that cannot be readily identified and recorded later.
   2. Include significant changes in the product delivered to Project site and changes in manufacturer's written instructions for installation.
   3. Note related Change Orders, record Specifications, and record Drawings where applicable.

B. Format: Submit record Product Data as paper copy.
   1. Include record Product Data directory organized by specification section number and title, electronically linked to each item of record Product Data.

2.4 MISCELLANEOUS RECORD SUBMITTALS

A. Assemble miscellaneous records required by other Specification Sections for miscellaneous record keeping and submittal in connection with actual performance of the Work. Bind or file miscellaneous records and identify each, ready for continued use and reference.

B. Format: Submit miscellaneous record submittals as paper copy.
   1. Include miscellaneous record submittals directory organized by specification section number and title, electronically linked to each item of miscellaneous record submittals.

PART 3 - EXECUTION

3.1 RECORDING AND MAINTENANCE

A. Recording: Maintain one copy of each submittal during the construction period for project record document purposes. Post changes and modifications to project record documents as they occur; do not wait until the end of Project.

B. Maintenance of Record Documents and Samples: Store record documents and Samples in the field office apart from the Contract Documents used for construction. Do not use project record documents for construction purposes. Maintain record documents in good order and in a clean, dry, legible condition, protected from deterioration and loss. Provide access to project record documents for Architect's reference during normal working hours.

END OF SECTION 01 78 39

SECTION 02 41 19 - SELECTIVE DEMOLITION

PART 1 - GENERAL

1.1 SUMMARY

A. Section Includes:
   1. Demolition and removal of selected portions of building or structure.

B. Related Requirements:
   1. Section 01 10 00 "Summary" for restrictions on the use of the premises, Owner-occupancy requirements, and phasing requirements.
   2. Section 01 35 91 "Historic Treatment Procedures" for historic removal and dismantling.
   3. Section 01 73 00 "Execution" for cutting and patching procedures.

1.2 DEFINITIONS

A. Remove: Detach items from existing construction and legally dispose of them off-site unless indicated to be removed and salvaged or removed and reinstalled.

B. Remove and Salvage: Carefully detach from existing construction, in a manner to prevent damage, and deliver to Owner.

C. Remove and Reinstall: Detach items from existing construction, prepare for reuse, and reinstall where indicated.

D. Existing to Remain: Existing items of construction that are not to be permanently removed and that are not otherwise indicated to be removed, removed and salvaged, or removed and reinstalled.

1.3 MATERIALS OWNERSHIP

A. Unless otherwise indicated, demolition waste becomes property of Contractor.

B. Historic items, relics, antiques, and similar objects including, but not limited to, cornerstones and their contents, commemorative plaques and tablets, and other items of interest or value to Owner that may be uncovered during demolition remain the property of Owner.
   1. Carefully salvage in a manner to prevent damage and promptly return to Owner.

1.4 PREINSTALLATION MEETINGS

A. Pre-demolition Conference: Conduct conference at Project site.
   1. Inspect and discuss condition of construction to be selectively demolished.
   2. Review structural load limitations of existing structure.
   3. Review and finalize selective demolition schedule and verify availability of materials, demolition personnel, equipment, and facilities needed to make progress and avoid delays.
   4. Review requirements of work performed by other trades that rely on substrates exposed by selective demolition operations.
   5. Review areas where existing construction is to remain and requires protection.

1.5 INFORMATIONAL SUBMITTALS

A. Proposed Protection Measures: Submit report, including drawings, that indicates the measures proposed for protecting individuals and property**,** for dust control, and for noise control. Indicate proposed locations and construction of barriers.

B. Schedule of Selective Demolition Activities: Indicate the following:
   1. Detailed sequence of selective demolition and removal work, with starting and ending dates for each activity. Ensure Owner's other occupants' and tenants' on-site operations are uninterrupted.
   2. Interruption of utility services. Indicate how long utility services will be interrupted.
   3. Coordination for shutoff, capping, and continuation of utility services.
   4. Use of elevator and stairs.
   5. Coordination of Owner's continuing occupancy of portions of existing building and of Owner's partial occupancy of completed Work.

C. Inventory: Submit a list of items to be removed and salvaged and deliver to Owner prior to start of demolition.

D. Pre-demolition Photographs or Video: Submit before Work begins.

E. Warranties: Documentation indicated that existing warranties are still in effect after completion of selective demolition.

1.6 CLOSEOUT SUBMITTALS

A. Inventory: Submit a list of items that have been removed and salvaged.

B. Landfill Records: Indicate receipt and acceptance of hazardous wastes by a landfill facility licensed to accept hazardous wastes.

1.7 FIELD CONDITIONS

A. Owner will occupy portions of building immediately adjacent to selective demolition area. Conduct selective demolition so Owner's operations will not be disrupted.

B. Conditions existing at time of inspection for bidding purpose will be maintained by Owner as far as practical.

C. Notify Architect of discrepancies between existing conditions and Drawings before proceeding with selective demolition.

D. Historic Areas: Demolition and hauling equipment and other materials shall be of sizes that clear surfaces within historic spaces, areas, rooms, and openings, including temporary protection, by 12 inches (300 mm) or more.

E. Storage or sale of removed items or materials on-site is not permitted.

F. Utility Service: Maintain existing utilities indicated to remain in service and protect them against damage during selective demolition operations.
   1. Maintain fire-protection facilities in service during selective demolition operations.

1.8 WARRANTY

A. Existing Warranties: Remove, replace, patch, and repair materials and surfaces cut or damaged during selective demolition, by methods and with materials so as not to void existing warranties. Notify warrantor before proceeding. Existing warranties include the following:

B. Notify warrantor on completion of selective demolition, and obtain documentation verifying that existing system has been inspected and warranty remains in effect. Submit documentation at Project closeout.

PART 2 - PRODUCTS

2.1 PEFORMANCE REQUIREMENTS

A. Regulatory Requirements: Comply with governing EPA notification regulations before beginning selective demolition. Comply with hauling and disposal regulations of authorities having jurisdiction.

B. Standards: Comply with ANSI/ASSE A10.6 and NFPA 241.

PART 3 - EXECUTION

3.1 EXAMINATION

A. Verify that utilities have been disconnected and capped before starting selective demolition operations.

B. Review record documents of existing construction provided by Owner. Owner does not guarantee that existing conditions are same as those indicated in record documents.

C. Survey existing conditions and correlate with requirements indicated to determine extent of selective demolition required.

D. When unanticipated mechanical, electrical, or structural elements that conflict with intended function or design are encountered, investigate and measure the nature and extent of conflict. Promptly submit a written report to Architect.

E. Perform an engineering survey of condition of building to determine whether removing any element might result in structural deficiency or unplanned collapse of any portion of structure or adjacent structures during selective building demolition operations.
   1. Perform surveys as the Work progresses to detect hazards resulting from selective demolition activities.

F. Survey of Existing Conditions: Record existing conditions by use of measured drawings, preconstruction photographs, and preconstruction videotapes.
   1. Comply with requirements specified in Section 01 32 33 "Photographic Documentation."
   2. Inventory and record the condition of items to be removed and salvaged. Provide photographs or video of conditions that might be misconstrued as damage caused by salvage operations.
   3. Before selective demolition or removal of existing building elements that will be reproduced or duplicated in final Work, make permanent record of measurements, materials, and construction details required to make exact reproduction.

3.2 UTILITY SERVICES AND MECHANICAL/ELECTRICAL SYSTEMS

A. Existing Services/Systems to Remain: Maintain services/systems indicated to remain and protect them against damage.
   1. Comply with requirements for existing services/systems interruptions specified in Section 01 10 00 "Summary."

B. Existing Services/Systems to Be Removed, Relocated, or Abandoned: Locate, identify, disconnect, and seal or cap off indicated utility services and mechanical/electrical systems serving areas to be selectively demolished.
   1. Owner will arrange to shut off indicated services/systems when requested by Contractor.
   2. Arrange to shut off indicated utilities with utility companies.
   3. If services/systems are required to be removed, relocated, or abandoned, provide temporary services/systems that bypass area of selective demolition and that maintain continuity of services/systems to other parts of building.
   4. Disconnect, demolish, and remove fire-suppression systems, plumbing, and HVAC systems, equipment, and components indicated to be removed.
      a. Piping to Be Removed: Remove portion of piping indicated to be removed and cap or plug remaining piping with same or compatible piping material.
      b. Piping to Be Abandoned in Place: Drain piping and cap or plug piping with same or compatible piping material.
      c. Equipment to Be Removed: Disconnect and cap services and remove equipment.
      d. Equipment to Be Removed and Reinstalled: Disconnect and cap services and remove, clean, and store equipment; when appropriate, reinstall, reconnect, and make equipment operational.
      e. Equipment to Be Removed and Salvaged: Disconnect and cap services and remove equipment and deliver to Owner.
      f. Ducts to Be Removed: Remove portion of ducts indicated to be removed and plug remaining ducts with same or compatible ductwork material.
      g. Ducts to Be Abandoned in Place: Cap or plug ducts with same or compatible ductwork material.

3.3 PREPARATION

A. Site Access and Temporary Controls: Conduct selective demolition and debris-removal operations to ensure minimum interference with roads, streets, walks, walkways, and other adjacent occupied and used facilities.
   1. Comply with requirements for access and protection specified in Section 01 50 00 "Temporary Facilities and Controls."

B. Temporary Facilities: Provide temporary barricades and other protection required to prevent injury to people and damage to adjacent buildings and facilities to remain.
   1. Provide protection to ensure safe passage of people around selective demolition area and to and from occupied portions of building.
   2. Provide temporary weather protection, during interval between selective demolition of existing construction on exterior surfaces and new construction, to prevent water leakage and damage to structure and interior areas.
   3. Protect walls, ceilings, floors, and other existing finish work that are to remain or that are exposed during selective demolition operations.
   4. Cover and protect furniture, furnishings, and equipment that have not been removed.
   5. Comply with requirements for temporary enclosures, dust control, heating, and cooling specified in Section 01 50 00 "Temporary Facilities and Controls."

C. Temporary Shoring: Provide and maintain shoring, bracing, and structural supports as required to preserve stability and prevent movement, settlement, or collapse of construction and finishes

to remain, and to prevent unexpected or uncontrolled movement or collapse of construction being demolished.

1. Strengthen or add new supports when required during progress of selective demolition.

3.4 SELECTIVE DEMOLITION, GENERAL

A. General: Demolish and remove existing construction only to the extent required by new construction and as indicated. Use methods required to complete the Work within limitations of governing regulations and as follows:
   1. Proceed with selective demolition systematically, from higher to lower level. Complete selective demolition operations above each floor or tier before disturbing supporting members on the next lower level.
   2. Neatly cut openings and holes plumb, square, and true to dimensions required. Use cutting methods least likely to damage construction to remain or adjoining construction. Use hand tools or small power tools designed for sawing or grinding, not hammering and chopping, to minimize disturbance of adjacent surfaces. Temporarily cover openings to remain.
   3. Cut or drill from the exposed or finished side into concealed surfaces to avoid marring existing finished surfaces.
   4. Do not use cutting torches until work area is cleared of flammable materials. At concealed spaces, such as duct and pipe interiors, verify condition and contents of hidden space before starting flame-cutting operations. Maintain fire watch and portable fire-suppression devices during flame-cutting operations.
   5. Maintain adequate ventilation when using cutting torches.
   6. Remove decayed, vermin-infested, or otherwise dangerous or unsuitable materials and promptly dispose of off-site.
   7. Remove structural framing members and lower to ground by method suitable to avoid free fall and to prevent ground impact or dust generation.
   8. Locate selective demolition equipment and remove debris and materials so as not to impose excessive loads on supporting walls, floors, or framing.
   9. Dispose of demolished items and materials promptly. Comply with requirements in Section 01 74 19 "Construction Waste Management and Disposal."

B. Work in Historic Areas: Selective demolition may be performed only in areas of the Project that are not designated as historic. In historic spaces, areas, and rooms or on historic surfaces, the terms "demolish" or "remove" shall mean historic "removal" or "dismantling" as specified in Section 01 35 91 "Historic Treatment Procedures."

C. Reuse of Building Elements: Project has been designed to result in end-of-Project rates for reuse of building elements as follows. Do not demolish building elements beyond what is indicated on Drawings without Architect's approval.

D. Removed and Salvaged Items:
   1. Clean salvaged items.
   2. Pack or crate items after cleaning. Identify contents of containers.
   3. Store items in a secure area until delivery to Owner.
   4. Transport items to Owner's storage area designated by Owner.
   5. Protect items from damage during transport and storage.

E. Removed and Reinstalled Items:
   1. Clean and repair items to functional condition adequate for intended reuse.
   2. Pack or crate items after cleaning and repairing. Identify contents of containers.
   3. Protect items from damage during transport and storage.

4. Reinstall items in locations indicated. Comply with installation requirements for new materials and equipment. Provide connections, supports, and miscellaneous materials necessary to make item functional for use indicated.

F. Existing Items to Remain: Protect construction indicated to remain against damage and soiling during selective demolition. When permitted by Architect, items may be removed to a suitable, protected storage location during selective demolition and cleaned and reinstalled in their original locations after selective demolition operations are complete.

3.5 DISPOSAL OF DEMOLISHED MATERIALS

A. General: Except for items or materials indicated to be recycled**,** reused, salvaged, reinstalled, or otherwise indicated to remain Owner's property, remove demolished materials from Project site and legally dispose of them in an EPA-approved landfill.
   1. Do not allow demolished materials to accumulate on-site.
   2. Remove and transport debris in a manner that will prevent spillage on adjacent surfaces and areas.
   3. Remove debris from elevated portions of building by chute, hoist, or other device that will convey debris to grade level in a controlled descent.
   4. Comply with requirements specified in Section 01 74 19 "Construction Waste Management and Disposal."

B. Burning: Do not burn demolished materials.

C. Disposal: Transport demolished materials off Owner's property and legally dispose of them.

3.6 CLEANING

A. Clean adjacent structures and improvements of dust, dirt, and debris caused by selective demolition operations. Return adjacent areas to condition existing before selective demolition operations began.

END OF SECTION 02 41 19

SECTION 04 01 20 - MAINTENANCE OF UNIT MASONRY

PART 1 - GENERAL

1.1 SUMMARY

A. Section includes maintenance of unit masonry consisting of brick clay masonry restoration and cleaning as follows:
   1. Repairing or replacing unit masonry, including replacing units.
   2. Repairing or replacing glass unit masonry, including replacing units.
   3. Painting steel uncovered during the work.
   4. Repointing joints.
   5. Preliminary cleaning, including removing plant growth.
   6. Cleaning exposed unit masonry surfaces.
   7. Parging unit masonry.

B. Related Sections:
   1. Division 01 Section "Historic Treatment Procedures."
   2. Division 07 Section "Sheet Metal Flashing and Trim" for metal flashing installed in or on restored clay masonry.

1.2 DEFINITIONS

A. Very Low-Pressure Spray: Under 100 psi.

B. Low-Pressure Spray: 100 to 400 psi.

C. Medium-Pressure Spray: 400 to 800 psi.

D. High-Pressure Spray: 800 to 1200 psi.

E. Saturation Coefficient: Ratio of the weight of water absorbed during immersion in cold water to weight absorbed during immersion in boiling water; used as an indication of resistance of masonry units to freezing and thawing.

1.3 PRECONSTRUCTION TESTING

A. Preconstruction Testing Service: Engage a qualified testing agency to perform preconstruction testing on masonry units as follows:
   1. Provide test specimens as indicated and representative of proposed materials and existing construction.
   2. Existing Mortar: Test according to ASTM C 295/C 295M, modified as agreed by testing service and Architect for Project requirements, to determine proportional composition of original ingredients, sizes and colors of aggregates, and approximate strength.
      a. Provide 2 test specimens for each building shown on the drawings to receive masonry repair or repointing work. Architect will assist in locating sample locations indicative of original or historic mortar materials.
      b. Contractor shall provide (and pay for) collection, labeling, shipping and testing of specimens.
      c. Contractor shall furnish test results to the Owner and Architect.
      d. Test specimens shall each be standard 20 grams in size, minimum.

B. The current approach for the masonry mortar, without testing, indicates that lime putty material should be used on the buildings.

1. The Bid shall be based on the use of lime putty material and labor.
2. If the test results indicate materials other than lime putty in one or more locations, then the Contractor shall propose a Change in the Work to include a change in materials, cost of materials, and labor, based on the test results, for use at the locations indicated by the results.

1.4 SUBMITTALS

A. Product Data: For each type of product indicated. Include recommendations for application and use. Include test data substantiating that products comply with requirements.

B. Samples for Verification: For the following:
1. Each type of masonry unit to be used for replacing existing units. Include sets of Samples as necessary to show the full range of shape, color, and texture to be expected.
   a. For each brick type, provide straps or panels containing at least four bricks. Include multiple straps for brick with a wide range.
2. Each type, color, and texture of pointing mortar in the form of sample mortar strips, 6 inches long by 1/2-inch-wide, set in aluminum or plastic channels.
   a. Include with each Sample a list of ingredients with proportions of each. Identify sources, both supplier and quarry, of each type of sand and brand names of cementitious materials and pigments if any.
3. Sealant Materials: See Division 07 Section "Joint Sealants."
4. Accessories: Each type of anchor, accessory, and miscellaneous support.

C. Cleaning Program describes the process and work flow for the project and weather limitations.

1.5 QUALITY ASSURANCE

A. Perform the work in compliance with historic guidelines established by the Secretary of the Interior and Standards for the Treatment of Historic Properties, unless otherwise indicated. Reference the following National Park Service publications:
1. Preservation Brief 1, “Assessing Cleaning and Water-Repellent Treatments for Historic Masonry Buildings.”
2. Preservation Brief 2, “Repointing Mortar Joints in Historic Masonry Buildings.”

B. Restoration Specialist Qualifications: Engage an experienced masonry restoration and cleaning firm to perform work of this Section. Firm shall have completed work similar in material, design, and extent to that indicated for this Project with a record of successful in-service performance for at least ten years. Experience installing standard unit masonry is not sufficient experience for masonry restoration work.
1. At Contractor's option, work may be divided between two specialist firms; one for cleaning work and one for repair work.
2. Field Supervision: Restoration specialist firms shall maintain experienced full-time supervisors on Project site during times that clay masonry restoration and cleaning work is in progress. Supervisors shall not be changed during Project except for causes beyond the control of restoration specialist firm.
3. Restoration Worker Qualifications: Persons who are experienced and specialize in restoration work of types they will be performing.
4. Provide project certificate training according to ASTM E2659-09 for the masons involved in the historical restoration. Submit certificate training for individuals in contact with the masonry restoration.

C. Chemical-Cleaner Manufacturer Qualifications: A firm regularly engaged in producing masonry cleaners that have been used for similar applications with successful results, and with factory-

trained representatives who are available for consultation and Project-site inspection and assistance at no additional cost.

D. Source Limitations: Obtain each type of material for masonry restoration (face brick, cement, sand, etc.) from one source with resources to provide materials of consistent quality in appearance and physical properties.

E. Quality-Control Program: Prepare a written quality-control program for this Project to systematically demonstrate the ability of personnel to properly follow methods and use materials and tools without damaging masonry. Include provisions for supervising performance and preventing damage due to worker fatigue.

F. Restoration Program: Prepare a written, detailed description of materials, methods, equipment, and sequence of operations to be used for each building of the restoration work including protection of surrounding materials and Project site.
   1. Perform the work in compliance with historic guidelines established by the Secretary of the Interior and Standards for the Treatment of Historic Properties, unless otherwise indicated. Notify Architect of any discrepancies that may exist.
   2. Include methods for keeping pointing mortar damp during curing period.
   3. If materials and methods other than those indicated are proposed for any phase of restoration work, add to the Quality-Control Program a written description of such materials and methods, including evidence of successful use on comparable projects, and demonstrations to show their effectiveness for this Project and worker's ability to use such materials and methods properly.

G. Cleaning Program: Prepare a written cleaning program for both buildings that describes cleaning process in detail, including materials, methods, and equipment to be used, protection of surrounding materials, and control of runoff during operations.
   1. Perform the work in compliance with historic guidelines established by the Secretary of the Interior and Standards for the Treatment of Historic Properties, unless otherwise indicated. Notify Architect of any discrepancies that may exist.
   2. If materials and methods other than those indicated are proposed for any phase of restoration work, add to the Quality-Control Program a written description of such materials and methods, including evidence of successful use on comparable projects, and demonstrations to show their effectiveness for this Project and worker's ability to use such materials and methods properly.

H. Cleaning and Repair Appearance Standard: Cleaned and repaired surfaces are to have a uniform appearance as viewed from 30 feet away by Architect. Perform additional paint and stain removal, general cleaning, and spot cleaning of small areas that are noticeably different, so that surface blends smoothly into surrounding areas.

I. Mockups: Prepare mockups of restoration and cleaning to demonstrate aesthetic effects and set quality standards for materials and execution and for fabrication and installation.
   1. Masonry Repair: Prepare sample areas for each type of masonry material for each building indicated to have repair work performed. If not otherwise indicated, size each mockup not smaller than 2 adjacent whole units or approximately 48 inches in least dimension. Erect sample areas in existing walls unless otherwise indicated, to demonstrate quality of materials, workmanship, and blending with existing work.
   2. Repointing: Rake out joints in 2 separate areas, each approximately 36 inches high by 48 inches wide for each type of repointing required and repoint for both existing buildings.
   3. Cleaning: Clean an area as indicated for each type of masonry and surface condition on each building.

4. Approval of mockups does not constitute approval of deviations from the Contract Documents contained in mockups unless Architect specifically approves such deviations in writing.
5. Approved mockups may become part of the completed Work if undisturbed at time of Substantial Completion.

J. Pre-installation Conference: Conduct conference at project site.
1. Review methods and procedures related to masonry restoration and cleaning including, but not limited to, the following:
a. Construction schedule for both buildings and link structure. Verify availability of materials, Restoration Specialist's personnel, equipment, and facilities needed to make progress and avoid delays.
b. Materials, material application, sequencing, tolerances, and required clearances.

1.6 DELIVERY, STORAGE, AND HANDLING

A. Deliver masonry units to Project site strapped together in suitable packs or pallets or in heavy-duty cartons.

B. Deliver other materials to Project site in manufacturer's original and unopened containers, labeled with manufacturer's name and type of products.

C. Store cementitious materials on elevated platforms, under cover, and in a dry location. Do not use cementitious materials that have become damp.

D. Store hydrated lime in manufacturer's original and unopened containers. Discard lime if containers have been damaged or have been opened for more than two days.

E. Store sand where grading and other required characteristics can be maintained and contamination avoided.

1.7 PROJECT CONDITIONS

A. Weather Limitations: Proceed with installation only when existing and forecasted weather conditions permit masonry restoration and cleaning work to be performed according to manufacturers' written instructions and specified requirements.

B. Repair masonry units and repoint mortar joints only when air temperature is between 40° and 90° F and is predicted to remain so for at least 7 days after completion of the Work unless otherwise indicated.

C. Cold-Weather Requirements: Comply with the following procedures for masonry repair and mortar-joint pointing unless otherwise indicated:
1. When air temperature is below 40° F, heat mortar ingredients, masonry repair materials, and existing masonry walls to produce temperatures between 40° and 120° F.
2. When mean daily air temperature is below 40° F, provide enclosure and heat to maintain temperatures above 32° F within the enclosure for 7 days after repair and pointing.

D. Hot-Weather Requirements: Protect masonry repair and mortar-joint pointing when temperature and humidity conditions produce excessive evaporation of water from mortar and repair materials. Provide artificial shade and wind breaks and use cooled materials as required to minimize evaporation. Do not apply mortar to substrates with temperatures of 90° F and above unless otherwise indicated.

E. For manufactured repair materials, perform work within the environmental limits set by each manufacturer.

F. Clean masonry surfaces only when air temperature is 40 deg F and above and is predicted to remain so for at least 7 days after completion of cleaning.

1.8 COORDINATION

A. Coordinate masonry restoration and cleaning with public circulation patterns at Project site. Some work is near public circulation patterns and active city streets. Public circulation patterns cannot be closed off entirely, and in places can be only temporarily redirected around small areas of work. Plan and execute the Work accordingly.

1.9 SEQUENCING AND SCHEDULING

A. Order replacement materials at earliest possible date to avoid delaying completion of the Work.

B. Order lime putty and sand for pointing mortar immediately after approval of mockups. Take delivery of and store at Project site a sufficient quantity to complete Project.

C. Perform masonry restoration work in the following sequence:
   1. Remove plant growth.
   2. Inspect for open mortar joints and repair before cleaning to prevent the intrusion of water and other cleaning materials into the wall.
   3. Remove paint.
   4. Clean masonry surfaces.
   5. Where water repellents, specified in Division 07, are to be used on or near masonry work, delay application of these chemicals until after pointing.
   6. Rake out mortar from joints surrounding masonry to be replaced and from joints adjacent to masonry repairs along joints.
   7. Repair masonry, including replacing existing masonry with new masonry materials.
   8. Rake out mortar from joints to be repointed.
   9. Point mortar and sealant joints.
   10. After repairs and repointing have been completed and cured, perform a final cleaning to remove residues from this work.
   11. Inspect for open mortar joints and repair before cleaning to prevent the intrusion of water and other cleaning materials into the wall.
   12. Remove paint.
   13. Clean masonry surfaces.

D. As scaffolding is removed, patch anchor holes used to attach scaffolding. Patch holes in masonry units to comply with "Masonry Unit Patching" Article. Patch holes in mortar joints to comply with "Repointing Masonry" Article.

PART 2 - PRODUCTS

2.1 MASONRY MATERIALS

A. Face Brick: Provide face brick, cut, or sawed shapes where required to complete masonry restoration work.
   1. Provide units with colors, color variation within units, surface texture, size, and shape to match existing brickwork and with physical properties as listed below:
      a. Physical Properties per ASTM C 67:

b. For existing brickwork that exhibits a range of colors or color variation within units, provide brick that proportionally matches that range and variation rather than brick that matches an individual color within that range.

2. Tolerances as Fabricated: Comply with tolerance requirements in ASTM C 216, Type FBS.

B. Building Brick: Provide building brick complying with ASTM C 62, of same vertical dimension as face brick, for masonry work concealed from view.
   1. Grade SW where in contact with earth.
   2. Grade SW, MW, or NW for concealed backup.

C. Salvaged Brick: Obtain salvaged brick from the existing building in the areas of demolition and sort by each brick type. Clean off residual mortar.

2.2 MORTAR MATERIALS

A. Portland Cement: ASTM C 150/C 150M, Type I or Type II, except Type III may be used for cold-weather construction; white or gray, or both where required for color matching of mortar.

B. Hydrated Lime: ASTM C 207, Type S.

C. Lime Putty: ASTM C1713 - 11 Standard Specifications for Mortars for the Repair of Historic Masonry. To conform to ASTM C5 and mixed to ASTM C 270 proportion speciation. ASTM C 1489 for factory prepared Lime Putty.

D. Mortar Sand: ASTM C 144 unless otherwise indicated.
   1. Color: Provide natural sand of the color necessary to produce required mortar color.
   2. For pointing mortar, provide sand with rounded edges.
   3. Match size, texture, and gradation of existing mortar sand as closely as possible. Blend several sands if necessary to achieve suitable match.

E. Mortar Pigments: Natural and synthetic iron oxides, compounded for mortar mixes. Use only pigments with a record of satisfactory performance in masonry mortars.

F. Hydraulic Lime Stucco/Plaster: Prepackaged, dry-mix containing aggregate to which only water must be added at Project site.
   1. Basis of Design Product: US Heritage Group, Inc; Heritage Hydraulic Lime Stucco/Plaster.

G. Water: Potable.

2.3 CLEANING MATERIALS

A. Water: Potable.

B. Hot Water: Water heated to a temperature of 140° to 160° F.

C. Job-Mixed Detergent Solution: Solution prepared by mixing 2 cups of tetrasodium polyphosphate, 1/2 cup of laundry detergent, and 20 quarts of hot water for every 5 gal. of solution required.

D. Job-Mixed Mold, Mildew, and Algae Remover: Solution prepared by mixing 2 cups of tetrasodium polyphosphate, 5 quarts of 5 percent sodium hypochlorite (bleach), and 15 quarts of hot water for every 5 gal. of solution required.

E. Nonacidic Gel Cleaner: Manufacturer's standard gel formulation, with pH between 6 and 9, that contains detergents with chelating agents and is specifically formulated for cleaning masonry surfaces.
   1. Products: Subject to compliance with requirements, provide the following available products that may be incorporated into the Work include, but are not limited to, the following:
      a. Price Research, Ltd.; Price Marble Cleaner-Gel.
      b. PROSOCO; Sure Klean 942 Limestone and Marble Cleaner.
      c. Cathedral Stone Products (equivalent).

F. Nonacidic Liquid Cleaner: Manufacturer's standard mildly alkaline liquid cleaner formulated for removing mold, mildew, and other organic soiling from ordinary building materials, including polished stone, brick, aluminum, plastics, and wood.
   1. Products: Subject to compliance with requirements, provide the following available products that may be incorporated into the Work include, but are not limited to, the following:
      a. Cathedral Stone Products; Bio-Cleaner.
      b. Diedrich Technologies Inc.; Diedrich 910PM Polished Marble Cleaner.
      c. Dominion Restoration Products, Inc.; Bio-Cleanse.
      d. Dumond Chemicals, Inc.; Safe n' Easy Architectural Cleaner/Restorer.
      e. Price Research, Ltd.; Price Non-Acid Masonry Cleaner.
      f. PROSOCO; Enviro Klean 2010 All Surface Cleaner.

G. Mild Acidic Cleaner: Manufacturer's standard mildly acidic cleaner containing no muriatic (hydrochloric), hydrofluoric, or sulfuric acid; or ammonium bifluoride or chlorine bleaches.
   1. Products: Subject to compliance with requirements, provide the following
   2. available products that may be incorporated into the Work include, but are not limited to, the following:
      a. ABR Products, Inc.; X-190 Limestone & Concrete Cleaner.
      b. Diedrich Technologies Inc.; Envirorestore 100.
      c. Dominion Restoration Products, Inc.; DR-60 Stone and Masonry Cleaner.
      d. PROSOCO; Enviro Klean BioWash.
      e. Cathedral Stone Products (equivalent).

H. Acidic Cleaner: Manufacturer's standard acidic masonry cleaner composed of hydrofluoric acid or ammonium bifluoride blended with other acids, detergents, wetting agents, and inhibitors.
   1. Products: Subject to compliance with requirements, provide the following available products that may be incorporated into the Work include, but are not limited to, the following:
      a. ABR Products, Inc.; 801 Heavy Duty Masonry Cleaner.
      b. Diedrich Technologies Inc.; Diedrich 101 Masonry Restorer or Diedrich 101G Granite, Terra Cotta, and Brick Cleaner.
      c. Dumond Chemicals, Inc.; Safe n' Easy Ultimate Stone and Masonry Cleaner or Safe n' Easy Heavy Duty Restoration Cleaner.
      d. EaCo Chem, Inc.; GS-Restoration or HD-Acid.
      e. Hydroclean, Hydrochemical Techniques, Inc.; Hydroclean Brick, Granite, Sandstone and Terra Cotta Cleaner (HT-626).
      f. Price Research, Ltd.; Price Heavy Duty Restoration Cleaner or Price Restoration Cleaner.
      g. PROSOCO; Enviro Klean Restoration Cleaner or Sure Klean Heavy-Duty Restoration Cleaner.
      h. Cathedral Stone Products (equivalent).

2.4 PAINT REMOVERS

A. Alkaline Paste Paint Remover: Manufacturer's standard alkaline paste or gel formulation, for removing paint from masonry; and containing no methylene chloride.
   1. Products: Subject to compliance with requirements, provide the following available products that may be incorporated into the Work include, but are not limited to, the following:
      a. ABR Products, Inc.: Citrus Paint Remover
      b. Diedrich Technologies, Inc. (Sandell Construction Solutions): 606 Multi-Layer Paint Remover or 606X Extra Thick Multi-Layer Paint Remover.
      c. EaCo Chem, Inc.
      d. Hydroclean (Hydrochamical Techniques, Inc.): HT-716 Heavy Duty Paint Remover.
      e. PROSOCO, Inc.: Sure Klean Heavy Duty Paint Stripper.
      f. Shore Corporation.
      g. Cathedral Stone Products (equivalent).

B. Covered or Skin-Forming Alkaline Paint Remover: Manufacturer's standard covered or skin-forming, alkaline paste or gel formulation, for removing paint from masonry; and containing no methylene chloride.
   1. Products: Subject to compliance with requirements, provide the following available products that may be incorporated into the Work include, but are not limited to, the following:
      a. ABR Products, Inc.
      b. Diedrich Technologies, Inc. (Sandell Construction Solutions): 404 Rip-Strip.
      c. Dumond Chemicals, Inc.: Peel Away 1.
      d. PROSOCO, Inc.: Enviro Klean Safety Peel
      e. EaCo Chem: InStrip
      f. Cathedral Stone Products (equivalent).

C. Solvent-Type Paste Paint Remover: Manufacturer's standard water-rinsable, solvent-type paste or gel formulation, for removing paint from masonry.
   1. Products: Subject to compliance with requirements, provide the following available products that may be incorporated into the Work include, but are not limited to, the following:
      a. Diedrich Technologies, Inc. (Sandell Construction Solutions): 505 Special Coatings Stripper.
      b. Dumond Chemicals, Inc.: Peel Away 2.
      c. Hydroclean (Hydrochamical Techniques, Inc.): HT-300 Solvent Paint Remover.
      d. PROSOCO, Inc.: Sure Klean Fast Acting Stripper
      e. Shore Corporation.
      f. EaCo Chem: AcryliStrip
      g. Cathedral Stone Products (equivalent).

D. Low-Odor, Solvent-Type Paste Paint Remover: Manufacturer's standard low-odor, water-rinsable, solvent-type paste, gel, or foamed emulsion formulation for removing paint from masonry; and containing no methanol or methylene chloride.
   1. Products: Subject to compliance with requirements, provide the following available products that may be incorporated into the Work include, but are not limited to, the following:
      a. ABR Products, Inc.
      b. Cathedral Stone Products, Inc.
      c. Dumond Chemicals, Inc.: Peel Away 6, 7 or 21.
      d. EaCo Chem, Inc.
      e. PROSOCO, Inc.: Enviro Klean Safety Peel 1

f. Cathedral Stone Products (equivalent).

E. Covered, Solvent-Type Paste Paint Remover: Manufacturer's standard, low-odor, covered, water-rinsable, solvent-type paste or gel formulation for removing paint from masonry; and containing no methanol or methylene chloride.
1. Products: Subject to compliance with requirements, provide the following available products that may be incorporated into the Work include, but are not limited to, the following:
a. Dumond Chemicals, Inc.
b. PROSOCO, Inc.
c. Cathedral Stone Products (equivalent).

2.5 ACCESSORY MATERIALS

A. Masonry Repair Anchors, Expansion Type: Mechanical fasteners designed for masonry veneer stabilization consisting of 1/4-inch- diameter, Type 304 stainless-steel rod with brass expanding shells at each end and water-shedding washer in the middle. Expanding shells shall be designed to provide positive mechanical anchorage to veneer on one end and backup masonry on the other.
1. Products: Subject to compliance with requirements, provide the following available products that may be incorporated into the Work include, but are not limited to, the following:
a. Dur-O-Wal (Hohman & Barnard, Inc): DA5000 Repair Anchor.
b. BLOK-LOK (Hohman & Barnard, Inc):; Torq-Lok 500 Series anchor.
c. Hohmann & Barnard, Inc.: Torq-Lik 500 Series anchor for solid backup.
d. Helifix (Halfen USA): TorkFix.

B. Masonry Repair Anchors, Helical Type: Mechanical fasteners designed for masonry veneer stabilization consisting of 1/4-inch- diameter, Type 304 stainless-steel rod helical design. Anchors shall be designed to provide friction anchorage to veneer on one end and backup masonry on the other.
1. Products: Subject to compliance with requirements, provide the following available products that may be incorporated into the Work include, but are not limited to, the following:
a. Simpson Strong-Tie: Heli-Tie.
b. Hohmann & Barnard, Inc.: Spira-Lok.
c. Helifix (Halfen USA): DryFix.
d. CTP (Construction Tie Products): Stich-Tie.

C. Sealant Materials:
1. Provide manufacturer's standard chemically curing, elastomeric sealant(s) of base polymer and characteristics indicated below that comply with applicable requirements in Division 07 Section "Joint Sealants."
2. Colors: Provide colors of exposed sealants to match colors of masonry adjoining installed sealant unless otherwise indicated.
3. Ground-Mortar Aggregate: Custom crushed and ground pointing mortar sand or existing mortar retrieved from joints. Grind to a particle size that matches the adjacent mortar aggregate and color. Remove all fines passing the 100 sieve.

D. Setting Buttons: Resilient plastic buttons, nonstaining to masonry, sized to suit joint thicknesses and bed depths of masonry units without intruding into required depths of pointing materials.

E. Masking Tape: Nonstaining, nonabsorbent material, compatible with pointing mortar, joint primers, sealants, and surfaces adjacent to joints; that will easily come off entirely, including adhesive.

F. Miscellaneous Products: Select materials and methods of use based on the following, subject to approval of a mockup:
   1. Previous effectiveness in performing the work involved.
   2. Little possibility of damaging exposed surfaces.
   3. Consistency of each application.
   4. Uniformity of the resulting overall appearance.
   5. Do not use products or tools that could do the following:
      a. Remove, alter, or in any way harm the present condition or future preservation of existing surfaces, including surrounding surfaces not in contract.
      b. Leave a residue on surfaces.

G. Thru-Wall Flashing: Perm-A-Barrier, 40 mil., self-adhesive, cold applied sheet consisting of 32 mil. of rubberized asphalt integrally bonded to an 8 mil., high-density, cross laminated polyethylene film as manufactured by GRACE Construction Products or equivalent. Provide stainless steel metal drip per manufacturer's details.
   1. Install thru-wall flashing with manufacturer's recommended caulk adhesive and mechanically attach with SS screws 12" on center through continuous SS termination bar.

H. Weeps: use Cell Vent Weephole Ventilator to form weeps/drains.
   1. Install weeps in the head joints in exterior wythes of masonry where shown on drawings, as follows:
      a. Space weepholes formed at 24" on center.
      b. Place cavity drainage material immediately above flashing in cavities.

I. Masonry Cavity Drainage Material: Mortar Net MN10-2 10" high x 1" thick open weave recycled polyester in a dovetail pattern, as manufactured by Mortar Net USA (800-664-6638) or equal. Install in accordance with manufacturer's printed instructions.

2.6 MORTAR MIXES

A. Measurement and Mixing: Measure materials and sand by volume or equivalent weight. Do not measure by shovel; use known measure. Mix materials in a clean mortar pan mill or premixed ahead of time for each building.
   1. Mixing Pointing Mortar: Thoroughly mix materials and sand together until the sand is coated with the lime putty. Use mortar within one hour of final mixing; do not retemper or use partially hardened material.

B. Colored Mortar: Produce mortar of color required by using specified ingredients. Do not alter specified proportions without Architect's approval.
   1. Mortar Pigments: Where mortar pigments are indicated, do not exceed a pigment-to-cement ratio of 1:10 by weight.

C. Do not use admixtures in mortar unless otherwise indicated.

D. Mortar Proportions: Mix mortar materials in the following proportions:
   1. Pointing Mortar for Brick: 1 part lime putty and 2.5 parts sand. Actual proportion will be verified with the final mortar analysis for each building. The range is likely 1 part lime putty and 2 to 3 parts sand.
      a. Add mortar pigments to produce mortar colors required.
      b. Verify mortar proportion with the provided preconstruction testing of the existing mortar and submit for review to the architect before starting the pointing operations.
   2. Pointing Mortar by Brick, <u>only</u> where indicated and with documented historic use of portland cement based mortars: ASTM C 270, Property Specification, Type N; with

cementitious material limited to portland cement and lime. Add mortar pigments to produce mortar colors required.

3. Rebuilding (Setting) Mortar: Same as pointing mortar except mortar pigments are not required.

2.7 CHEMICAL CLEANING SOLUTIONS

A. Dilute chemical cleaners with water to produce solutions not exceeding concentration recommended by chemical-cleaner manufacturer.

B. Acidic Cleaner Solution for Brick: Dilute with water to produce hydrofluoric acid content of 3 percent or less, but not greater than that recommended by chemical-cleaner manufacturer.

PART 3 - EXECUTION

3.1 PROTECTION

A. Protect persons, motor vehicles, surrounding surfaces of building being restored and building site from harm resulting from masonry restoration work.

B. Comply with chemical-cleaner manufacturer's written instructions for protecting building and other surfaces against damage from exposure to its products. Prevent chemical-cleaning solutions from coming into contact with people, motor vehicles, landscaping, buildings, and other surfaces that could be harmed by such contact.

1. Cover adjacent surfaces with materials that are proven to resist chemical cleaners used unless chemical cleaners being used will not damage adjacent surfaces. Use materials that contain only waterproof, UV-resistant adhesives. Apply masking agents to comply with manufacturer's written instructions. Do not apply liquid masking agent to painted or porous surfaces. When no longer needed, promptly remove masking to prevent adhesive staining.
2. Keep wall wet below area being cleaned to prevent streaking from runoff.
3. Do not clean masonry during winds of sufficient force to spread cleaning solutions to unprotected surfaces.
4. Neutralize and collect alkaline and acid wastes for disposal off Owner's property.
5. Dispose of runoff from cleaning operations by legal means and in a manner that prevents soil erosion, undermining of paving and foundations, damage to landscaping, and water penetration into building interiors.

C. Prevent mortar from staining face of surrounding masonry and other surfaces.

1. Cover sills, ledges, and projections to protect from mortar droppings.
2. Keep wall area wet below rebuilding and pointing work to discourage mortar from adhering.
3. Immediately remove mortar in contact with exposed masonry and other surfaces.
4. Clean mortar splatters from scaffolding at end of each day.

D. Remove gutters and downspouts adjacent to masonry and store during masonry restoration and cleaning. Reinstall when masonry restoration and cleaning are complete.

1. Provide temporary rain drainage during work to direct water away from building.

3.2 UNUSED ANCHOR REMOVAL

A. Remove masonry anchors, brackets, wood nailers, and other extraneous items no longer in use unless identified as historically significant or indicated to remain.

1. Remove items carefully to avoid spalling or cracking masonry.

2. Where directed, if an item cannot be removed without damaging surrounding masonry, do the following:
   a. Cut or grind off item approximately 3/4 inch beneath surface and core drill a recess of same depth in surrounding masonry as close around item as practical.
   b. Immediately paint exposed end of item with two coats of antirust coating, following coating manufacturer's written instructions and without exceeding manufacturer's recommended dry film thickness per coat. Keep paint off sides of recess.
3. Patch the hole where each item was removed unless directed to remove and replace the masonry unit.

3.3 BRICK REMOVAL AND REPLACEMENT

A. At locations indicated, remove bricks that are damaged, spalled, or deteriorated or are to be reused. Remove no more than 4'-0" of brick at one time. Carefully demolish or remove entire units from joint to joint, without damaging surrounding masonry, in a manner that permits replacement with full-size units.
   1. When removing single bricks, remove material from center of brick and work toward outside edges.

B. Support and protect remaining masonry that surrounds removal area. Maintain flashing, reinforcement, lintels, and adjoining construction in an undamaged condition.

C. Notify Architect of unforeseen detrimental conditions including voids, cracks, bulges, and loose units in existing masonry backup, rotted wood, rusted metal, and other deteriorated items.

D. Remove in an undamaged condition as many whole bricks as possible.
   1. Remove mortar, loose particles, and soil from brick by cleaning with hand chisels, brushes, and water.
   2. Remove sealants by cutting close to brick with utility knife and cleaning with solvents.
   3. Store brick for reuse. Store off ground, on skids, and protected from weather.
   4. Deliver cleaned brick not required for reuse to Owner unless otherwise indicated.

E. Clean bricks surrounding removal areas by removing mortar, dust, and loose particles in preparation for replacement.

F. Replace removed damaged brick with other removed brick and salvaged brick in good quality, where possible, or with new brick matching existing brick, including size. Do not use broken units unless they can be cut to usable size.

G. Install replacement brick into bonding and coursing pattern of existing brick. If cutting is required, use a motor-driven saw designed to cut masonry with clean, sharp, unchipped edges.
   1. Maintain joint width for replacement units to match existing joints.
   2. Use setting buttons or shims to set units accurately spaced with uniform joints.

H. Lay replacement brick with completely filled bed, head, and collar joints. Butter ends with sufficient mortar to fill head joints and shove into place. Wet both replacement and surrounding bricks that have ASTM C 67 initial rates of absorption (suction) of more than 30 g/30 sq. in. per min. Use wetting methods that ensure that units are nearly saturated but surface is dry when laid.
   1. Tool exposed mortar joints in repaired areas to match joints of surrounding existing brickwork.
   2. Rake out mortar used for laying brick before mortar sets and point new mortar joints in repaired area to comply with requirements for repointing existing masonry, and at same time as repointing of surrounding area.

3. When mortar is sufficiently hard to support units, remove shims and other devices interfering with pointing of joints.

3.4 CLEANING MASONRY, GENERAL

A. Proceed with cleaning in an orderly manner; work from bottom to top of each scaffold width and from one end of each elevation to the other. Ensure that dirty residues and rinse water will not wash over cleaned, dry surfaces.

B. Use only those cleaning methods indicated for each masonry material and location.
   1. Do not use wire brushes or brushes that are not resistant to chemical cleaner being used. Do not use plastic-bristle brushes if natural-fiber brushes will resist chemical cleaner being used.
   2. Use spray equipment that provides controlled application at volume and pressure indicated, measured at spray tip. Adjust pressure and volume to ensure that cleaning methods do not damage masonry.
      a. Equip units with pressure gages.
   3. For chemical-cleaner spray application, use low-pressure tank or chemical pump suitable for chemical cleaner indicated, equipped with cone-shaped spray tip.
   4. For water-spray application, use fan-shaped spray tip that disperses water at an angle of 25 to 50 degrees.
   5. For heated water-spray application, use equipment capable of maintaining temperature between 140 and 160 deg F at flow rates indicated.
   6. For steam application, use steam generator capable of delivering live steam at nozzle.

C. Perform each cleaning method indicated in a manner that results in uniform coverage of all surfaces, including corners, moldings, and interstices, and that produces an even effect without streaking or damaging masonry surfaces.

D. Water Application Methods:
   1. Water-Soak Application: Soak masonry surfaces by applying water continuously and uniformly to limited area for time indicated. Apply water at low pressures and low volumes in multiple fine sprays using perforated hoses or multiple spray nozzles. Erect a protective enclosure constructed of polyethylene sheeting to cover area being sprayed.
   2. Water-Spray Applications: Unless otherwise indicated, hold spray nozzle at least 6 inches from surface of masonry and apply water in horizontal back and forth sweeping motion, overlapping previous strokes to produce uniform coverage.

E. Steam Cleaning: Apply steam to masonry surfaces at the very low pressures indicated for each type of masonry material. Hold nozzle at least 6 inches from surface of masonry and apply steam in horizontal back and forth sweeping motion, overlapping previous strokes to produce uniform coverage.

F. Chemical-Cleaner Application Methods: Apply chemical cleaners to masonry surfaces to comply with chemical-cleaner manufacturer's written instructions; use brush application. Do not spray apply at pressures exceeding 50 psi. Do not allow chemicals to remain on surface for periods longer than those indicated or recommended by manufacturer.

G. Rinse off chemical residue and soil by working upward from bottom to top of each treated area at each stage or scaffold setting. Periodically during each rinse, test pH of rinse water running off of cleaned area to determine that chemical cleaner is completely removed.
   1. Apply neutralizing agent and repeat rinse if necessary to produce tested pH of between 6.7 and 7.5.

H. After cleaning is complete, remove protection no longer required. Remove tape and adhesive marks.

3.5 PRELIMINARY CLEANING

A. Removing Plant Growth: Completely remove visible plant, moss, and shrub growth from masonry surfaces. Carefully remove plants, creepers, and vegetation by cutting at roots and allowing to dry as long as possible before removal. Remove loose soil and debris from open masonry joints to whatever depth they occur.

B. Preliminary Cleaning: Before beginning general cleaning, remove extraneous substances that are resistant to cleaning methods being used. Extraneous substances include paint, calking, asphalt, and tar.
   1. Carefully remove heavy accumulations of material from surface of masonry with a sharp chisel. Do not scratch or chip masonry surface.
   2. Remove paint and calking with alkaline paint remover.
      a. Comply with requirements in "Paint Removal" Article.
      b. Repeat application up to two times if needed.
   3. Remove asphalt and tar with solvent-type paint remover.
      a. Comply with requirements in "Paint Removal" Article.
      b. Apply paint remover only to asphalt and tar by brush without prewetting.
      c. Allow paint remover to remain on surface for 10 to 30 minutes.
      d. Repeat application if needed.

3.6 PAINT REMOVAL

A. Paint-Remover Application, General: Apply paint removers according to paint-remover manufacturer's written instructions. Do not allow paint removers to remain on surface for periods longer than those indicated or recommended in writing by manufacturer.

B. Paint Removal with Alkaline Paste Paint Remover:

   1. Remove loose and peeling paint using low or medium-pressure water spray, scrapers, stiff brushes, or a combination of these. Let surface dry thoroughly.
   2. Apply paint remover to dry, painted surface with brushes.
   3. Allow paint remover to remain on surface for period recommended in writing by manufacturer or as determined by preconstruction testing.
   4. Rinse with **hot** water applied by **l**ow or medium-pressure spray to remove chemicals and paint residue.
   5. Repeat process if necessary to remove all paint.
   6. Apply acidic cleaner or manufacturer's recommended afterwash to surface, while surface is still wet, using low-pressure spray equipment or soft-fiber brush. Let cleaner or afterwash remain on surface as a neutralizing agent for period recommended in writing by chemical-cleaner or afterwash manufacturer.
   7. Rinse with cold water applied by low or medium-pressure spray to remove chemicals and soil.

C. Paint Removal with Covered or Skin-Forming Alkaline Paint Remover:

   1. Remove loose and peeling paint using low or medium-pressure water spray, scrapers, stiff brushes, or a combination of these. Let surface dry thoroughly.
   2. Apply paint remover to dry, painted surface with trowel, spatula, or as recommended in writing by manufacturer.
   3. Apply cover according to manufacturer's written instructions.

4. Allow paint remover to remain on surface for period recommended in writing by manufacturer or as determined by preconstruction testing.
5. Scrape off paint and remover.
6. Rinse with hot water applied by low or medium-pressure spray to remove chemicals and paint residue.
7. Apply acidic cleaner or manufacturer's recommended afterwash to surface, while surface is still wet, using low-pressure spray equipment or soft-fiber brush. Let cleaner or afterwash remain on surface as a neutralizing agent for period recommended in writing by chemical-cleaner or afterwash manufacturer.
8. Rinse with cold water applied by low or medium-pressure spray to remove chemicals and soil.
9. For spots of remaining paint, apply alkaline paste paint remover according to "Paint Removal with Alkaline Paste Paint Remover" Paragraph.

D. Paint Removal with Solvent-Type Paste Paint Remover:

1. Remove loose and peeling paint using low or medium-pressure water spray, scrapers, stiff brushes, or a combination of these. Let surface dry thoroughly.
2. Apply thick coating of paint remover to painted surface with natural-fiber cleaning brush, deep-nap roller, or large paint brush. Apply in one or two coats according to manufacturer's written instructions.
3. Allow paint remover to remain on surface for period recommended in writing by manufacturer or as determined by preconstruction testing.
4. Rinse with cold or hot water applied by low or medium-pressure spray to remove chemicals and paint residue.

E. Paint Removal with Covered, Solvent-Type Paste Paint Remover:

1. Remove loose and peeling paint using low or medium-pressure water spray, scrapers, stiff brushes, or a combination of these. Let surface dry thoroughly.
2. Apply paint remover to dry, painted surface with trowel, spatula, or as recommended in writing by manufacturer.
3. Apply cover according to manufacturer's written instructions.
4. Allow paint remover to remain on surface for period recommended in writing by manufacturer or as determined by preconstruction testing.
5. Scrape off paint and remover.
6. Rinse with cold or hot water applied by low or medium-pressure spray to remove chemicals and paint residue.

3.7 CLEANING BRICKWORK

A. Cold-Water Soak:
1. Apply cold water by intermittent spraying to keep surface moist.
2. Use perforated hoses or other means that will apply a fine water mist to entire surface being cleaned.
3. Apply water in cycles with at least 30 minutes between cycles.
4. Continue spraying until surface encrustation has softened sufficiently to permit its removal by water wash, as indicated by cleaning tests.
5. Continue spraying for 72 hours.
6. Remove soil and softened surface encrustation from masonry with cold water applied by low-pressure spray.

B. Hot-Water Wash: Use hot water applied by low-pressure spray.

C. Steam Cleaning: Apply steam at very low pressures not exceeding 80 psi. Remove dirt softened by steam with wood scrapers, stiff-nylon or -fiber brushes, or cold-water wash, as indicated by cleaning tests.

D. Detergent Cleaning:
   1. Wet masonry with cold water applied by low-pressure spray.
   2. Scrub masonry with detergent solution using medium-soft brushes until soil is thoroughly dislodged and can be removed by rinsing. Use small brushes to remove soil from mortar joints and crevices. Dip brush in solution often to ensure that adequate fresh detergent is used and that masonry surface remains wet.
   3. Rinse with hot water applied by low-pressure spray to remove detergent solution and soil.
   4. Repeat cleaning procedure above where required to produce cleaning effect established by mockup.

E. Mold, Mildew, and Algae Removal:
   1. Wet masonry with cold water applied by low-pressure spray.
   2. Apply mold, mildew, and algae remover by brush or low-pressure spray.
   3. Scrub masonry with medium-soft brushes until mold, mildew, and algae are thoroughly dislodged and can be removed by rinsing. Use small brushes for mortar joints and crevices. Dip brush in mold, mildew, and algae remover often to ensure that adequate fresh cleaner is used and that masonry surface remains wet.
   4. Rinse with hot water applied by low-pressure spray to remove mold, mildew, and algae remover and soil.

F. Nonacidic Gel Chemical Cleaning:
   1. Wet masonry with water applied by low-pressure spray.
   2. Apply nonacidic gel cleaner in 1/8-inch thickness by brush, working into joints and crevices. Apply quickly and do not brush out excessively so area will be uniformly covered with fresh cleaner and dwell time will be uniform throughout area being cleaned.
   3. Let cleaner remain on surface for period indicated below:
      a. As recommended by chemical-cleaner manufacturer.
      b. As established by mockup.
   4. Remove bulk of nonacidic gel cleaner by squeegeeing into containers for disposal.
   5. Rinse with water applied by low-pressure spray to remove chemicals and soil.
   6. Repeat cleaning procedure above where required to produce cleaning effect established by mockup. Do not repeat more than once. If additional cleaning is required, use steam cleaning.

G. Nonacidic Liquid Chemical Cleaning:
   1. Wet masonry with water applied by low-pressure spray.
   2. Apply cleaner to masonry in two applications by brush or low-pressure spray. Let cleaner remain on surface for period indicated below:
      a. As recommended by chemical-cleaner manufacturer.
      b. As established by mockup.
   3. Rinse with water applied by low-pressure spray to remove chemicals and soil.
   4. Repeat cleaning procedure above where required to produce cleaning effect established by mockup. Do not repeat more than once. If additional cleaning is required, use steam cleaning.

H. Mild Acidic Chemical Cleaning:
   1. Wet masonry with cold water applied by low-pressure spray.
   2. Apply cleaner to masonry in two applications by brush or low-pressure spray. Let cleaner remain on surface for period indicated below:
      a. As recommended by chemical-cleaner manufacturer.
      b. As established by mockup.

3. Rinse with cold water applied by low-pressure spray to remove chemicals and soil.
4. Repeat cleaning procedure above where required to produce cleaning effect established by mockup. Do not repeat more than once. If additional cleaning is required, use a steam cleaning.

3.8 REPOINTING MASONRY

A. Rake out and repoint joints to the following extent:
   1. All joints in the exterior elevations or in the areas indicated.
   2. Joints where mortar is missing or where they contain holes.

B. Rake out joints as follows, according to procedures demonstrated in approved mockup:
   1. Remove mortar from joints to depth of 2 times joint width, but not less than 1/2 inch or not less than that required to expose sound, unweathered mortar.
   2. Remove mortar from masonry surfaces within raked-out joints to provide reveals with square backs and to expose masonry for contact with pointing mortar. Brush, vacuum, or flush joints to remove dirt and loose debris.
   3. Do not spall edges of masonry units or widen joints. Replace or patch damaged masonry units as directed by Architect.
      a. Cut out center of mortar bed joints using angle grinders with diamond-impregnated metal blades. Remove remaining mortar by hand with chisel and resilient mallet. Strictly adhere to approved quality-control program.

C. Notify Architect of unforeseen detrimental conditions including voids in mortar joints, cracks, loose masonry units, rotted wood, rusted metal, and other deteriorated items.

D. Pointing with Mortar:
   1. Rinse joint surfaces with water to remove dust and mortar particles. Time rinsing application so, at time of pointing, joint surfaces are damp but free of standing water. If rinse water dries, dampen joint surfaces before pointing.
   2. Apply pointing mortar first to areas where existing mortar was removed to depths greater than surrounding areas. Apply in layers not greater than 3/8 inch until a uniform depth is formed. Fully compact each layer thoroughly and allow it to become thumbprint hard before applying next layer.
   3. After low areas have been filled to same depth as remaining joints, point all joints by placing mortar in layers not greater than 3/8 inch. Fully compact each layer and allow to become thumbprint hard before applying next layer. Where existing masonry units have worn or rounded edges, slightly recess finished mortar surface below face of masonry to avoid widened joint faces. Take care not to spread mortar beyond joint edges onto exposed masonry surfaces or to featheredge the mortar.
   4. When mortar is thumbprint hard, tool joints to match original appearance of joints as demonstrated in approved mockup. Remove excess mortar from edge of joint by brushing.
   5. Cure mortar by maintaining in thoroughly damp condition for at least 72 consecutive hours including weekends and holidays.
      a. Acceptable curing methods include covering with wet burlap and plastic sheeting, periodic hand misting, and periodic mist spraying using system of pipes, mist heads, and timers.
      b. Adjust curing methods to ensure that pointing mortar is damp throughout its depth without eroding surface mortar.
   6. Hairline cracking within the mortar or mortar separation at edge of a joint is unacceptable. Completely remove such mortar and repoint.

E. Pointing with Sealant:
   1. After raking out, keep joints dry and free of mortar and debris.

2. Clean and prepare joint surfaces according to Division 07 Section "Joint Sealants." Prime joint surfaces unless sealant manufacturer recommends against priming. Do not allow primer to spill or migrate onto adjoining surfaces.
3. Fill sealant joints with specified joint sealant according to Division 07 Section "Joint Sealants" and the following:
   a. Install cylindrical sealant backing beneath the sealant, except where space is insufficient. There, install bond-breaker tape.
   b. Install sealant using only proven installation techniques that will ensure that sealant will be deposited in a uniform, continuous ribbon, without gaps or air pockets, and with complete wetting of the joint bond surfaces equally on both sides. Fill joint flush with surrounding masonry and matching the contour of adjoining mortar joints.
   c. Install sealant as recommended by sealant manufacturer but within the following general limitations, measured at the center (thin) section of the bead:
      1) Fill joints to a depth equal to joint width, but not more than 1/2 inch deep or less than 1/4 inch deep.
   d. Immediately after first tooling, apply ground-mortar aggregate to sealant, gently pushing aggregate into the surface of sealant. Retool sealant to form smooth, uniform beads, slightly concave. Remove excess sealant and aggregate from surfaces adjacent to joint.
   e. Do not allow sealant to overflow or spill onto adjoining surfaces, or to migrate into the voids of adjoining surfaces, particularly rough textures. Remove excess and spillage of sealant promptly as the work progresses. Clean adjoining surfaces by the means necessary to eliminate evidence of spillage, without damage to adjoining surfaces or finishes, as demonstrated in an approved mockup.
4. Cure sealant according to Division 07 Section "Joint Sealants."

F. Where repointing work precedes cleaning of existing masonry, allow mortar to harden at least 30 days before beginning cleaning work.

3.9 PARGING

A. Parge exterior masonry, where indicated. Dampen surface before applying first coat and scarify base coat(s) to ensure full bond to subsequent coat.
   1. Follow manufacturer’s preparation, installation, and curing procedures.
   2. Remove all paint, waterproofing coatings, biological growth
   3. Remove all loose/deteriorated parging.
   4. Remove all portland cement based repairs.
   5. Remove loose pointing mortar.
   6. Cut edges of damaged parging areas perpendicular to direction of wall (do not feather edge patch).
   7. Remove dust and debris (wash with low pressure water only and brush if necessary).
   8. Allow areas that need repair to dry to 15% WME (wood moisture equivalent).
   9. Repoint as necessary using lime putty mortar, for finish rake back new pointing mortar to leave enough of the brick edges exposed for a parging key (1/4"). Follow specified lime mortar pointing and curing procedures.
   10. Parge using lime putty stucco or natural hydraulic lime stucco.
      a. Apply base coat to minimum 3/8-inch, maximum 3/4-inch thickness. If greater than 3/4-inch base coat thickness is required, apply intermediate coats, each not greater than 3/4-inch in thickness.
      b. Apply finish coat of 1/4-inch (6 mm).
   11. Provide a trowel finish with smooth, flat, dense surface and maximum surface variation of 1/8 inch per foot. Form a wash at top of parging and a cove at bottom where applicable.
   12. Cure for a minimum of 72 hours after application, following manufacturers recommended curing procedures.

3.10 FINAL CLEANING

A. After mortar has fully hardened, thoroughly clean exposed masonry surfaces of excess mortar and foreign matter; use wood scrapers, stiff-nylon or -fiber brushes, and clean water, spray applied at low pressure.
   1. Do not use metal scrapers or brushes.
   2. Do not use acidic or alkaline cleaners.

B. Wash adjacent woodwork and other non-masonry surfaces. Use detergent and soft brushes or cloths.

C. Clean mortar and debris from roof; remove debris from gutters and downspouts. Rinse off roof and flush gutters and downspouts.

D. Sweep and rake adjacent pavement and grounds to remove mortar and debris. Where necessary, pressure wash pavement surfaces to remove mortar, dust, dirt, and stains.

3.11 FIELD QUALITY CONTROL

A. Inspectors: Owner will engage qualified independent inspectors to perform inspections and prepare test reports. Allow inspectors use of lift devices and scaffolding, as needed, to perform inspections.

B. Architect's Project Representatives: Architect will assign Project representatives to help carry out Architect's responsibilities at the site, including observing progress and quality of portion of the Work completed. Allow Architect's Project representatives use of lift devices and scaffolding, as needed, to observe progress and quality of portion of the Work completed.

C. Notify Architect's Project representatives in advance of times when lift devices and scaffolding will be relocated. Do not relocate lift devices and scaffolding until Architect's Project representatives have had reasonable opportunity to make observations of work areas at lift device or scaffold location.

END OF SECTION 04 01 20

SECTION 04 01 40 - MAINTENANCE OF STONE ASSEMBLIES

PART 1 - GENERAL

1.1 SUMMARY

A. Section includes maintenance of stone assemblies consisting of stone restoration and cleaning as follows:
   1. Paint removal from stone.
   2. Repointing joints.
   3. Stone patching compound.
   4. Preliminary cleaning, including removing plant growth.
   5. Cleaning exposed stone surfaces.

B. Related Sections:
   1. Division 01 Section "Historic Treatment Procedures."

1.2 DEFINITIONS

A. Very Low-Pressure Spray: Under 100 psi.

B. Low-Pressure Spray: 100 to 400 psi; 4 to 6 gpm.

C. Medium-Pressure Spray: 400 to 800 psi; 4 to 6 gpm.

D. High-Pressure Spray: 800 to 1200 psi; 4 to 6 gpm.

E. Stone Terminology: ASTM C 119.

F. Face Bedding: Setting of stone with the natural bedding planes (strata) vertical and parallel to the wall plane rather than horizontal or "naturally bedded," which holds bedding planes together by gravity.

1.3 PRECONSTRUCTION TESTING

A. Preconstruction Testing Service: Engage a qualified testing agency to perform preconstruction testing on masonry units as follows:
   1. Provide test specimens as indicated and representative of proposed materials and existing construction.
   2. Existing Mortar: Test according to ASTM C 295/C 295M, modified as agreed by testing service and Architect for Project requirements, to determine proportional composition of original ingredients, sizes and colors of aggregates, and approximate strength.
      a. Provide 2 test specimens for each building shown on the drawings to receive masonry repair or repointing work. Architect will assist in locating sample locations indicative of original or historic mortar materials.
      b. Contractor shall provide (and pay for) collection, labeling, shipping and testing of specimens.
      c. Contractor shall furnish test results to the Owner and Architect.

B. The current approach for the masonry mortar, without testing, indicates that **lime putty** material should be used on the buildings.
   1. The Bid shall be based on the use of **lime putty** material and labor.
   2. If the test results indicate materials other than lime putty in one or more locations, then the Contractor shall propose a Change in the Work to include a change in materials, cost

of materials, and labor, based on the test results, for use at the locations indicated by the results.

1.4 SUBMITTALS

A. Product Data: For each type of product indicated. Include recommendations for application and use. Include test data substantiating that products comply with requirements.

B. Shop Drawings: For the following:
   1. Provisions for expansion joints or other sealant joints.
   2. Provisions for flashing, lighting fixtures, conduits, and weep holes as required.
   3. Replacement and repair anchors, including drilled-in pins. Include details of anchors within individual stone units, with locations of anchors and dimensions of holes and recesses in stone required for anchors, including direction and angle of holes for pins.

C. Samples for Verification: For the following:
   1. Each type, color, and texture of pointing mortar in the form of sample mortar strips, 6 inches long by 1/4 inch wide, set in aluminum or plastic channels.
      a. Include with each Sample a list of ingredients with proportions of each. Identify sources, both supplier and quarry, of each type of sand and brand names of cementitious materials and pigments if any.
   2. Each type of stone patching compound in form of briquettes, at least 3 inches long by 1-1/2 inches wide. Document each Sample with manufacturer and stock number or other information necessary to order additional material.
   3. Each type of adhesive.
   4. Sealant Materials: See Division 07 Section "Joint Sealants."
   5. Accessories: Each type of anchor, accessory, and miscellaneous support.

1.5 QUALITY ASSURANCE

A. Restoration Specialist Qualifications: Engage an experienced stone restoration and cleaning firm to perform work of this Section. Firm shall have completed work similar in material, design, and extent to that indicated for this Project with a record of successful in-service performance. Experience installing standard unit masonry or new stone masonry is not sufficient experience for stone restoration work.
   1. At Contractor's option, work may be divided between two specialist firms: one for cleaning work and one for repair work.
   2. Field Supervision: Restoration specialist firms shall maintain experienced full-time supervisors on Project site during times that stone restoration and cleaning work is in progress. Supervisors shall not be changed during Project except for causes beyond control of restoration specialist firm.
   3. Restoration Worker Qualifications: Persons who are experienced and specialize in restoration work of types they will be performing. When stone units are being patched, assign at least one worker among those performing patching work who is trained and certified by manufacturer of patching compound to apply its products.

B. Chemical-Cleaner Manufacturer Qualifications: A firm regularly engaged in producing masonry cleaners that have been used for similar applications with successful results, and with factory-trained representatives who are available for consultation and Project-site inspection and assistance at no additional cost.

C. Source Limitations: Obtain each type of material for stone restoration (stone, cement, sand, etc.) from one source with resources to provide materials of consistent quality in appearance and physical properties.

D. Quality-Control Program: Prepare a written quality-control program for this Project to systematically demonstrate the ability of personnel to properly follow methods and use materials and tools without damaging masonry. Include provisions for supervising performance and preventing damage due to worker fatigue.

E. Restoration Program: Prepare a written, detailed description of materials, methods, equipment, and sequence of operations to be used for each phase of restoration work including protection of surrounding materials and Project site.
   1. Include methods for keeping pointing mortar damp during curing period.
   2. If materials and methods other than those indicated are proposed for any phase of restoration work, add to the Quality-Control Program a written description of such materials and methods, including evidence of successful use on comparable projects, and demonstrations to show their effectiveness for this Project and worker's ability to use such materials and methods properly.

F. Cleaning Program: Prepare a written cleaning program that describes cleaning process in detail, including materials, methods, and equipment to be used, protection of surrounding materials, and control of runoff during operations.
   1. If materials and methods other than those indicated are proposed for any phase of restoration work, add to the Quality-Control Program a written description of such materials and methods, including evidence of successful use on comparable projects, and demonstrations to show their effectiveness for this Project and worker's ability to use such materials and methods properly.

G. Cleaning and Repair Appearance Standard: Cleaned and repaired surfaces are to have a uniform appearance as viewed from 20 feet away by Architect. Perform additional paint and stain removal, general cleaning, and spot cleaning of small areas that are noticeably different, so that surface blends smoothly into surrounding areas.

H. Mockups: Prepare mockups of restoration and cleaning to demonstrate aesthetic effects and set quality standards for materials and execution and for fabrication and installation.
   1. Stone Repair: Prepare sample areas for each type of stone indicated to have repair work performed. If not otherwise indicated, size each mockup not smaller than 2 adjacent whole units or approximately 48 inches in least dimension. Erect sample areas in existing walls unless otherwise indicated, to demonstrate quality of materials, workmanship, and blending with existing work. Include the following as a minimum:
      a. Replacement: Four stone units replaced.
      b. Partial Stone Replacement: Two partial stone replacements (dutchman repairs).
      c. Patching: Three small holes at least 1 inch in diameter.
   2. Repointing: Rake out joints in 2 separate areas, each approximately 36 inches high by 48 inches wide for each type of repointing required and repoint one of the areas.
   3. Cleaning: Clean an area approximately 25 square feet for each type of stone and surface condition.
      a. Test cleaners and methods on samples of adjacent materials for possible adverse reactions. Do not use cleaners and methods known to have deleterious effect.
      b. Allow a waiting period of not less than seven days after completion of sample cleaning to permit a study of sample panels for negative reactions.
   4. Approval of mockups does not constitute approval of deviations from the Contract Documents contained in mockups unless Architect specifically approves such deviations in writing.
   5. Approved mockups may become part of the completed Work if undisturbed at time of Substantial Completion.

I. Preinstallation Conference: Conduct conference at Project site.

1. Review methods and procedures related to stone restoration and cleaning including, but not limited to, the following:
    a. Construction Schedule: Verify availability of materials, Restoration Specialist's personnel, equipment, and facilities needed to make progress and avoid delays.
    b. Materials, material application, sequencing, tolerances, and required clearances.
    c. Replacement stone
    d. Pointing samples

1.6 DELIVERY, STORAGE, AND HANDLING

A. Deliver stone units to Project site strapped together in suitable packs or pallets or in heavy-duty crates.

B. Deliver each piece of limestone with code mark or setting number on unexposed face, corresponding to Shop Drawings, using non-staining paint.

C. Deliver other materials to Project site in manufacturer's original and unopened containers, labeled with manufacturer's name and type of products.

D. Store cementitious materials on elevated platforms, under cover, and in a dry location. Do not use cementitious materials that have become damp.

E. Store hydrated lime in manufacturer's original and unopened containers. Discard lime if containers have been damaged or have been opened for more than two days.

F. Store lime putty covered with water in sealed containers.

G. Store sand where grading and other required characteristics can be maintained and contamination avoided.

1.7 PROJECT CONDITIONS

A. Weather Limitations: Proceed with installation only when existing and forecasted weather conditions permit stone restoration and cleaning work to be performed according to manufacturers' written instructions and specified requirements.

B. Repair stone units and repoint mortar joints only when air temperature is between 40° and 90° F and is predicted to remain so for at least 7 days after completion of the Work unless otherwise indicated.

C. Cold-Weather Requirements: Comply with the following procedures for stone repair and mortar-joint pointing unless otherwise indicated:
    1. When air temperature is below 40° F, heat mortar ingredients, repair materials, and existing stone to produce temperatures between 40° and 120° F.
    2. When mean daily air temperature is below 40° F, provide enclosure and heat to maintain temperatures above 32° F within the enclosure for 7 days after repair and pointing.

D. Hot-Weather Requirements: Protect stone repair and mortar-joint pointing when temperature and humidity conditions produce excessive evaporation of water from mortar and patching materials. Provide artificial shade and wind breaks and use cooled materials as required to minimize evaporation. Do not apply mortar to substrates with temperatures of 90° F and above unless otherwise indicated.

E. For manufactured repair materials, perform work within the environmental limits set by each manufacturer.

F. Clean stone surfaces only when air temperature is 40° F and above and is predicted to remain so for at least 7 days after completion of cleaning.

G. Apply stone consolidation treatment only when surface and air temperatures are between 50° and 90° F and rain is not expected within 24 hours.

1.8 COORDINATION

A. Coordinate stone restoration and cleaning with public circulation patterns at Project site. Some work may be near public circulation patterns. Public circulation patterns cannot be closed off entirely, and in places can be only temporarily redirected around small areas of work.

B. Where the Work is adjacent to building electrical service or other equipment, work with power company and owner to safely access this work. Plan and execute the Work accordingly.

1.9 SEQUENCING AND SCHEDULING

A. Order replacement materials at earliest possible date to avoid delaying completion of the Work.

B. Order lime putty and sand for pointing mortar immediately after approval of samples. Take delivery of and store at Project site a sufficient quantity to complete Project.

C. Perform stone restoration work in the following sequence:
1. Remove plant growth.
2. Inspect for open mortar joints and repair before cleaning to prevent the intrusion of water and other cleaning materials into the wall.
3. Remove paint.
4. Clean stone surfaces.
5. Where water repellents, specified in Division 07, are to be used on or near stonework, delay application of these chemicals until after pointing.
6. Rake out mortar from joints surrounding stone to be replaced and from joints adjacent to stone repairs along joints.
7. Repair stonework, including replacing existing stone with new stone.
8. Rake out mortar from joints to be repointed.
9. Point mortar and sealant joints.
10. After repairs and repointing have been completed and cured, perform a final cleaning to remove residues from this work.
11. Inspect for open mortar joints and repair before cleaning to prevent the intrusion of water and other cleaning materials into the wall.
12. Remove paint.

D. As scaffolding is removed, patch anchor holes used to attach scaffolding. Patch holes in stone to comply with "Stone Patching" Article. Patch holes in mortar joints to comply with "Repointing Stonework" Article.

PART 2 - PRODUCTS

2.1 MORTAR MATERIALS

A. Hydrated Lime: ASTM C 207, Type S.

B. Factory-Prepared Lime Putty: ASTM C 1489.

C. Quicklime: ASTM C 5, pulverized lime.

D. Mortar Sand: ASTM C 144 unless otherwise indicated.
   1. Color: Provide natural sand of color necessary to produce required mortar color.
   2. For pointing mortar, provide sand with rounded edges.
   3. Match size, texture, and gradation of existing mortar sand as closely as possible. Blend several sands if necessary to achieve suitable match.

E. Mortar Pigments: Natural and synthetic iron oxides, compounded for mortar mixes. Use only pigments with a record of satisfactory performance in masonry mortars.

F. Water: Potable.

2.2 MANUFACTURED REPAIR MATERIALS

A. Stone Patching Compound: Factory-mixed cementitious product that is custom manufactured for patching stone.
   1. Products: Subject to compliance with requirements, provide the available products that may be incorporated into the Work include, but are not limited to, the following:
      a. Cathedral Stone Products, Inc.
      b. Conproco Corporation; Mimic.
      c. Edison Coatings, Inc.; Custom System 45.
      d. KEIM Mineral Coatings of America.
      e. Jahn Restoration Mortars.
   2. Use formulation that is vapor- and water permeable (equal to or more than the stone), exhibits low shrinkage, has lower modulus of elasticity than the stone units being repaired, and develops high bond strength to all types of stone.
   3. Use formulation having working qualities and retardation control to permit forming and sculpturing where necessary.
   4. Formulate patching compound in colors, textures, and grain to match stone being patched. Provide sufficient number of colors to enable matching each piece of stone.

2.3 PAINT REMOVERS

A. Alkaline Paste Paint Remover: Manufacturer's standard alkaline paste formulation for removing paint coatings from masonry.
   1. Products: Subject to compliance with requirements, provide available products that may be incorporated into the Work include, but are not limited to, the following:
      a. ABR Products, Inc.; 800 Brush Grade.
      b. Diedrich Technologies Inc.; 606 Multi-Layer Paint Remover or 606X Extra Thick Multi-Layer Paint Remover.
      c. Hydroclean, Hydrochemical Techniques, Inc.; Hydroclean HT-716 Heavy Duty Paint Remover.
      d. Price Research, Ltd.; Price Heavy Duty Paint Stripper.
      e. PROSOCO; Sure Klean Heavy-Duty Paint Stripper.
      f. Cathedral Stone Products (equivalent).

B. Covered or Skin-Forming Alkaline Paint Remover: Manufacturer's standard covered or skin-forming alkaline formulation for removing paint coatings from masonry.
   1. Products: Subject to compliance with requirements, provide the available products that may be incorporated into the Work include, but are not limited to, the following:
      a. ABR Products, Inc.; Grip 'N Strip 800 Fast Acting.
      b. Diedrich Technologies Inc.; 606 Multi-Layer Paint Remover or 606X Extra Thick Multi-Layer Paint Remover with pull-off removal system.
      c. Dumond Chemicals, Inc.; Peel Away 1 System.
      d. PROSOCO; Enviro Klean Safety Peel 1 or Enviro Klean Safety Peel 3 with Enviro Klean Overcoat.

e. Cathedral Stone Products (equivalent).

C. Solvent-Type Paint Remover: Manufacturer's standard water-rinsable, solvent-type gel formulation for removing paint coatings from masonry.
1. Products: Subject to compliance with requirements, provide the available products that may be incorporated into the Work include, but are not limited to, the following:
a. ABR Products, Inc.; Super Bio Strip Gel.
b. Diedrich Technologies Inc.; 505 Special Coatings Stripper.
c. Dumond Chemicals, Inc.; Peel Away 2.
d. Hydroclean, Hydrochemical Techniques, Inc.; Hydroclean HT-300 Solvent Paint Remover.
e. Price Research, Ltd.; Price Strip-All.
f. PROSOCO; Sure Klean Fast Acting Stripper.
g. Cathedral Stone Products (equivalent).

2.4 CLEANING MATERIALS

A. Water: Potable.

B. Hot Water: Water heated to a temperature of 140° to 160° F.

C. Job-Mixed Detergent Solution: Solution prepared by mixing 2 cups of tetrasodium polyphosphate, 1/2 cup of laundry detergent, and 20 quarts of hot water for every 5 gal. of solution required.

D. Job-Mixed Mold, Mildew, and Algae Remover: Solution prepared by mixing 2 cups of tetrasodium polyphosphate, 5 quarts of 5 percent sodium hypochlorite (bleach), and 15 quarts of hot water for every 5 gal. of solution required.

E. Nonacidic Gel Cleaner: Manufacturer's standard gel formulation, with pH between 6 and 9, that contains detergents with chelating agents and is specifically formulated for cleaning masonry surfaces.
1. Products: Subject to compliance with requirements, provide the available products that may be incorporated into the Work include, but are not limited to, the following:
a. Price Research, Ltd.; Price Marble Cleaner-Gel.
b. PROSOCO; Sure Klean 942 Limestone and Marble Cleaner.
c. Cathedral Stone Products (equivalent).

F. Nonacidic Liquid Cleaner: Manufacturer's standard mildly alkaline liquid cleaner formulated for removing mold, mildew, and other organic soiling from ordinary building materials, including polished stone, brick, aluminum, plastics, and wood.
1. Products: Subject to compliance with requirements, provide the available products that may be incorporated into the Work include, but are not limited to, the following:
a. Diedrich Technologies Inc.; Diedrich 910PM Polished Marble Cleaner.
b. Dominion Restoration Products, Inc.; Bio-Cleanse.
c. Dumond Chemicals, Inc.; Safe n' Easy Architectural Cleaner/Restorer.
d. Price Research, Ltd.; Price Non-Acid Masonry Cleaner.
e. PROSOCO; Enviro Klean 2010 All Surface Cleaner.
f. Cathedral Stone Products (equivalent).

G. One-Part Limestone Cleaner: Manufacturer's standard one-part acidic formulation for cleaning limestone.
1. Products: Subject to compliance with requirements, provide the available products that may be incorporated into the Work include, but are not limited to, the following:
a. ABR Products, Inc.; X-190 Limestone & Concrete Cleaner.

b. Hydroclean, Hydrochemical Techniques, Inc.; Hydroclean Limestone and Marble Cleaner and Brightener (HT-907).
c. Price Research, Ltd.; Price Limestone Restorer.
d. PROSOCO; Sure Klean Limestone Restorer.
e. Cathedral Stone Products (equivalent).

H. Two-Part Limestone Cleaner: Manufacturer's standard system consisting of potassium or sodium hydroxide based, alkaline prewash cleaner and acidic afterwash cleaner that does not contain hydrofluoric acid.
1. Products: Subject to compliance with requirements, provide the available products that may be incorporated into the Work include, but are not limited to, the following:
a. ABR Products, Inc.; 500 Limestone Prewash Cleaner followed by 500 Limestone Afterwash.
b. Diedrich Technologies Inc.; Diedrich 707X Limestone Cleaner Pre-Rinse followed by 707N Limestone Neutralizer After-Rinse.
c. Hydroclean, Hydrochemical Techniques, Inc.; Hydroclean Limestone and Marble Precleaner (HT-704) and Hydroclean Limestone and Marble Cleaner and Brightener (HT-907).
d. Price Research, Ltd.; Price Limestone Pre-Wash followed by Limestone After-Wash System.
e. PROSOCO; Enviro Klean BioKlean followed by Sure Klean Limestone & Masonry Afterwash
f. Cathedral Stone Products (equivalent).

2.5 EMBEDDED FLASHING MATERIALS

A. Flexible Flashing: Use one of the following, unless otherwise indicated:
1. Copper-Laminated Flashing: 5-oz./sq. ft. copper sheet bonded between 2 layers of asphalt-free glass-fiber cloth. Use only where flashing is fully concealed in masonry.
a. Products: Subject to compliance with requirements, provide one of the following:
1) Advanced Building Products Inc.; Copper Sealtite 2000.
2) Hohmann & Barnard, Inc.; H & B Copper-Tuff Flashing.
3) Sandell Manufacturing Co., Inc.; Copper Fabric NA Flashing.
4) York Manufacturing, Inc.; Multi-Flash 500.
2. Elastomeric Thermoplastic Flashing: Composite flashing product consisting of a polyester-reinforced ethylene interpolymer alloy.
a. Products: Subject to compliance with requirements, provide one of the following:
1) DuPont; Thru-Wall Flashing.
2) Hohmann & Barnard, Inc.; Flex-Flash.
3) Hyload, Inc.; Hyload Flashing Membrane.
b. Monolithic Sheet: Elastomeric thermoplastic flashing, 0.040 inch thick.
c. Accessories: Provide preformed corners, end dams, other special shapes, and seaming materials produced by flashing manufacturer.

B. Adhesives, Primers, and Seam Tapes for Flashings: Flashing manufacturer's standard products or products recommended by flashing manufacturer for bonding flashing sheets to each other and to substrates.

2.6 ACCESSORY MATERIALS

A. Stone Anchors: Type and size indicated or, if not indicated, to match existing anchors in size and type. Fabricate anchors from Type 316 stainless steel.

B. Sealant Materials:

1. Provide manufacturer's standard chemically curing, elastomeric sealant(s) of base polymer and characteristics indicated below that comply with applicable requirements in Division 07 Section "Joint Sealants."
   a. Single-component, non-sag urethane sealant.
2. Colors: Provide colors of exposed sealants to match colors of stonework adjoining installed sealant unless otherwise indicated.

C. Joint-Sealant Backing:
1. Cylindrical Sealant Backings: ASTM C 1330, Type C (closed-cell material with a surface skin), and of size and density to control sealant depth and otherwise contribute to producing optimum sealant performance.
2. Bond-Breaker Tape: Polyethylene tape or other plastic tape recommended by sealant manufacturer for preventing sealant from adhering to rigid, inflexible joint-filler materials or joint surfaces at back of joint where such adhesion would result in sealant failure. Provide self-adhesive tape where applicable.

D. Setting Buttons: Resilient plastic buttons, non-staining to stone, sized to suit joint thicknesses and bed depths of stone units without intruding into required depths of pointing materials.

E. Masking Tape: Non-staining, nonabsorbent material, compatible with pointing mortar, joint primers, sealants, and surfaces adjacent to joints; that will easily come off entirely, including adhesive.

F. Antirust Coating: Fast-curing, lead- and chromate-free, self-curing, universal modified-alkyd primer complying with MPI #79, Alkyd Anticorrosive Metal Primer.
1. Use coating requiring by manufacturer's literature or certified statement.

G. Miscellaneous Products: Select materials and methods of use based on the following, subject to approval of a mockup:
1. Previous effectiveness in performing the work involved.
2. Little possibility of damaging exposed surfaces.
3. Consistency of each application.
4. Uniformity of the resulting overall appearance.
5. Do not use products or tools that could do the following:
   a. Remove, alter, or in any way harm the present condition or future preservation of existing surfaces, including surrounding surfaces not in contract.
   b. Leave a residue on surfaces.

2.7 MORTAR MIXES

A. Measurement and Mixing: Measure cementitious materials and sand in a dry condition by volume or equivalent weight. Do not measure by shovel; use known measure. Mix materials in a clean, mechanical batch mixer.
1. Mixing Pointing Mortar: See Section 04 01 20 Maintenance of Unit Masonry.

B. Colored Mortar: Produce mortar of color required by using specified ingredients. Do not alter specified proportions without Architect's approval.
1. Mortar Pigments: Where mortar pigments are indicated, do not exceed a pigment-to-cement ratio of 1:10 by weight.

C. Do not use admixtures in mortar unless otherwise indicated.

D. Mortar Proportions: See Section 04 01 20 Maintenance of Unit Masonry

2.8 CHEMICAL CLEANING SOLUTIONS

A. Dilute chemical cleaners with water to produce solutions not exceeding concentration recommended by chemical-cleaner manufacturer.

B. Acidic Cleaner Solution for Unpolished Stone: Dilute with water to produce hydrofluoric acid content of 3 percent or less, but not greater than that recommended by chemical-cleaner manufacturer.
   1. Use only on unpolished granite, unpolished dolomite marble, and siliceous sandstone.

C. Acidic Cleaner for Polished Stone: Dilute with water to concentration demonstrated by testing that does not etch or otherwise damage polished surface, but not greater than that recommended by chemical-cleaner manufacturer.
   1. Use only on polished granite and polished dolomite marble.

PART 3 - EXECUTION

3.1 PROTECTION

A. Protect persons, motor vehicles, surrounding surfaces of building being restored, building site, plants, and surrounding buildings from harm resulting from stone restoration work.
   1. Erect temporary protective covers over walkways and at points of pedestrian and vehicular entrance and exit that must remain in service during course of restoration and cleaning work.

B. Comply with chemical-cleaner manufacturer's written instructions for protecting building and other surfaces against damage from exposure to its products. Prevent chemical cleaning solutions from coming into contact with people, motor vehicles, landscaping, buildings, and other surfaces that could be harmed by such contact.
   1. Cover adjacent surfaces with materials that are proven to resist chemical cleaners used unless chemical cleaners being used will not damage adjacent surfaces. Use materials that contain only waterproof, UV-resistant adhesives. Apply masking agents to comply with manufacturer's written instructions. Do not apply liquid masking agent to painted or porous surfaces. When no longer needed, promptly remove masking to prevent adhesive staining.
   2. Keep wall wet below area being cleaned to prevent streaking from runoff.
   3. Do not clean stone during winds of sufficient force to spread cleaning solutions to unprotected surfaces.
   4. Neutralize and collect alkaline and acid wastes for disposal off Owner's property.
   5. Dispose of runoff from cleaning operations by legal means and in a manner that prevents soil erosion, undermining of paving and foundations, damage to landscaping, and water penetration into building interiors.

C. Prevent mortar from staining face of surrounding stone and other surfaces.
   1. Cover sills, ledges, and projections to protect from mortar droppings.
   2. Keep wall area wet below rebuilding and pointing work to discourage mortar from adhering.
   3. Immediately remove mortar in contact with exposed stone and other surfaces.
   4. Clean mortar splatters from scaffolding at end of each day.

D. Remove gutters and downspouts adjacent to stone and store during stone restoration and cleaning. Reinstall when stone restoration and cleaning are complete.
   1. Provide temporary rain drainage during work to direct water away from building.

3.2 PARTIAL STONE REPAIR FOR PATCHING

A. Remove defective portion of existing stone unit. Carefully remove defective portion of stone by making vertical and horizontal saw cuts and demolishing defective material to depth required for stone patting compound.
   1. Make edges of backing stone at cuts smooth and square to each other and to finished surface; essentially rectangular. Make back of removal area flat and parallel to stone face.
   2. Do not overcut at corners and intersections. Hand trim to produce clean sharp corners with no rounding and no damage to existing work to remain.
   3. If existing stone that is to remain becomes damaged, remove damaged area and enlarge partial replacement as required.

B. Apply stone patching compound to comply with manufacturer's written instructions. Build surface to match proposed profile.

C. Clean residue from exposed surfaces and patch chipped areas as specified in "Stone Patching" Article.

3.3 CLEANING STONE, GENERAL

A. Proceed with cleaning in an orderly manner; work from bottom to top of each scaffold width and from one end of each elevation to the other. Ensure that dirty residues and rinse water will not wash over cleaned, dry surfaces.

B. Use only those cleaning methods indicated for each stone material and location.
   1. Do not use wire brushes or brushes that are not resistant to chemical cleaner being used. Do not use plastic-bristle brushes if natural-fiber brushes will resist chemical cleaner being used.
   2. Use spray equipment that provides controlled application at volume and pressure indicated, measured at spray tip. Adjust pressure and volume to ensure that cleaning methods do not damage stone.
      a. Equip units with pressure gages.
   3. For chemical-cleaner spray application, use low-pressure tank or chemical pump suitable for chemical cleaner indicated, equipped with cone-shaped spray tip.
   4. For water-spray application, use fan-shaped spray tip that disperses water at an angle of 25 to 50 degrees.
   5. For high-pressure water-spray application, use fan-shaped spray tip that disperses water at an angle of at least 40 degrees.
   6. For heated water-spray application, use equipment capable of maintaining temperature between 140 and 160 deg F at flow rates indicated.
   7. For steam application, use steam generator capable of delivering live steam at nozzle.

C. Perform each cleaning method indicated in a manner that results in uniform coverage of all surfaces, including corners, moldings, and interstices, and that produces an even effect without streaking or damaging stone surfaces.

D. Water Application Methods:
   1. Water-Soak Application: Soak stone surfaces by applying water continuously and uniformly to limited area for time indicated. Apply water at low pressures and low volumes in multiple fine sprays using perforated hoses or multiple spray nozzles. Erect a protective enclosure constructed of polyethylene sheeting to cover area being sprayed.
   2. Water-Spray Applications: Unless otherwise indicated, hold spray nozzle at least 6 inches from surface of stone and apply water in horizontal back and forth sweeping motion, overlapping previous strokes to produce uniform coverage.

E. Steam Cleaning: Apply steam to stone surfaces at the very low pressures indicated for each type of stonework. Hold nozzle at least 6 inches from surface of stone and apply steam in horizontal back and forth sweeping motion, overlapping previous strokes to produce uniform coverage.

F. Chemical-Cleaner Application Methods: Apply chemical cleaners to stone surfaces to comply with chemical-cleaner manufacturer's written instructions; use brush application. Do not allow chemicals to remain on surface for periods longer than those indicated or recommended by manufacturer.

G. Rinse off chemical residue and soil by working upward from bottom to top of each treated area at each stage or scaffold setting. Periodically during each rinse, test pH of rinse water running off of cleaned area to determine that chemical cleaner is completely removed.
   1. Apply neutralizing agent and repeat rinse if necessary to produce tested pH of between 6.7 and 7.5.

H. After cleaning is complete, remove protection no longer required. Remove tape and adhesive marks.

3.4 PRELIMINARY CLEANING

A. Removing Plant Growth: Completely remove visible plant, moss, and shrub growth from stone surfaces. Carefully remove plants, creepers, and vegetation by cutting at roots and allowing to dry as long as possible before removal. Remove loose soil or debris from open joints to whatever depth they occur.

B. Preliminary Cleaning: Before beginning general cleaning, remove extraneous substances that are resistant to cleaning methods being used. Extraneous substances include paint, calking, asphalt, and tar.
   1. Carefully remove heavy accumulations of material from surface of stone with sharp chisel. Do not scratch or chip stone surface.
   2. Remove paint and calking with alkaline paint remover.
      a. Comply with requirements in "Paint Removal" Article.
      b. Repeat application up to two times if needed.
   3. Remove asphalt and tar with solvent-type paint remover.
      a. Comply with requirements in "Paint Removal" Article.
      b. Apply paint remover only to asphalt and tar by brush without prewetting.
      c. Allow paint remover to remain on surface for 10 to 30 minutes.
      d. Repeat application if needed.

3.5 PAINT REMOVAL

A. Paint Removal with Alkaline Paste Paint Remover:
   1. Remove loose and peeling paint using low-pressure spray, scrapers, stiff brushes, or a combination of these. Let surface dry thoroughly.
   2. Apply paint remover to dry, painted stone with brushes.
   3. Allow paint remover to remain on surface for period recommended by manufacturer.
   4. Rinse with water applied by low-pressure spray to remove chemicals and paint residue.
   5. Repeat process if necessary to remove all paint.
   6. Apply acidic cleaner or manufacturer's recommended after-wash to stone, while surface is still wet, using low-pressure spray equipment or soft-fiber brush. Let cleaner or after-wash remain on surface as a neutralizing agent for period recommended by chemical-cleaner or after-wash manufacturer.
   7. Rinse with cold water applied by low-pressure spray to remove chemicals and soil.

B. Paint Removal with Solvent-Type Paint Remover:
   1. Remove loose and peeling paint using low-pressure spray, scrapers, stiff brushes, or a combination of these. Let surface dry thoroughly.
   2. Apply thick coating of paint remover to painted stone with natural-fiber cleaning brush, deep-nap roller, or large paint brush.
   3. Allow paint remover to remain on surface for period recommended by manufacturer.
   4. Rinse with water applied by low-pressure spray to remove chemicals and paint residue.

3.6 CLEANING STONEWORK

A. Detergent Cleaning:
   1. Wet stone with cold water applied by low-pressure spray.
   2. Scrub stone with detergent solution using medium-soft brushes until soil is thoroughly dislodged and can be removed by rinsing. Use small brushes to remove soil from mortar joints and crevices. Dip brush in solution often to ensure that adequate fresh detergent is used and that stone surface remains wet.
   3. Rinse with cold water applied by low-pressure spray to remove detergent solution and soil.
   4. Repeat cleaning procedure above where required to produce cleaning effect established by mockup.

B. Mold, Mildew, and Algae Removal:
   1. Wet stone with cold water applied by low-pressure spray.
   2. Apply mold, mildew, and algae remover by brush or low-pressure spray.
   3. Scrub stone with medium-soft brushes until mold, mildew, and algae are thoroughly dislodged and can be removed by rinsing. Use small brushes for mortar joints and crevices. Dip brush in mold, mildew, and algae remover often to ensure that adequate fresh cleaner is used and that stone surface remains wet.
   4. Rinse with cold water applied by low-pressure spray to remove mold, mildew, and algae remover and soil.
   5. Repeat cleaning procedure above where required to produce cleaning effect established by mockup.

C. Two-Part Limestone Chemical Cleaning:
   1. Wet stone with cold water applied by low-pressure spray.
   2. Apply alkaline prewash cleaner to stone by brush or roller. Let cleaner remain on surface for period recommended by chemical-cleaner manufacturer unless otherwise indicated.
   3. Rinse with cold water applied by medium-pressure spray to remove chemicals and soil.
   4. Apply acidic after-wash cleaner to stone in two applications, while surface is still wet, using low-pressure spray equipment, deep-nap roller or soft-fiber brush. Let neutralizer remain on surface for period recommended by manufacturer unless otherwise indicated.
   5. Rinse with cold water applied by medium-pressure spray to remove chemicals and soil.
   6. Repeat cleaning procedure above where required to produce cleaning effect established by mockup. Do not repeat more than once.

3.7 REPOINTING STONEWORK

A. Rake out and repoint joints to the following extent:
   1. All joints for both buildings in areas indicated.

B. Rake out joints as follows, according to procedures demonstrated in approved mockup:
   1. Remove mortar from joints to depth of 2 times joint width, but not less than 1/2 inch or not less than that required to expose sound, un-weathered mortar.

2. Remove mortar from stone surfaces within raked-out joints to provide reveals with square backs and to expose stone for contact with pointing mortar. Brush, vacuum, or flush joints to remove dirt and loose debris.
3. Do not spall edges of stone units or widen joints. Replace or patch damaged stone units as directed by Architect.
   a. Cut out center of mortar bed joints using angle grinders with diamond-impregnated metal blades. Remove remaining mortar by hand with chisel and resilient mallet. Strictly adhere to approved quality-control program.

C. Notify Architect of unforeseen detrimental conditions including voids in mortar joints, cracks, loose stone, rotted wood, rusted metal, and other deteriorated items.

D. Pointing with Mortar:
1. Rinse joint surfaces with water to remove dust and mortar particles. Time rinsing application so, at time of pointing, joint surfaces are damp but free of standing water. If rinse water dries, dampen joint surfaces before pointing.
2. Apply pointing mortar first to areas where existing mortar was removed to depths greater than surrounding areas. Apply in layers not greater than 3/8 inch until a uniform depth is formed. Fully compact each layer thoroughly and allow it to become thumbprint hard before applying next layer.
3. After low areas have been filled to same depth as remaining joints, point all joints by placing mortar in layers not greater than 3/8 inch. Fully compact each layer and allow to become thumbprint hard before applying next layer. Where existing stone has worn or rounded edges, slightly recess finished mortar surface below face of stone to avoid widened joint faces. Take care not to spread mortar beyond joint edges onto exposed stone surfaces or to featheredge the mortar.
4. When mortar is thumbprint hard, tool joints to match original appearance of joints as demonstrated in approved mockup. Remove excess mortar from edge of joint by brushing.
5. Cure mortar by maintaining in thoroughly damp condition for at least 72 consecutive hours, including weekends and holidays.
   a. Acceptable curing methods include covering with wet burlap and plastic sheeting, periodic hand misting, and periodic mist spraying using system of pipes, mist heads, and timers.
   b. Adjust curing methods to ensure that pointing mortar is damp throughout its depth without eroding surface mortar.
6. Hairline cracking within the mortar or mortar separation at edge of a joint is unacceptable. Completely remove such mortar and repoint.

E. Where repointing work precedes cleaning of existing stone, allow mortar to harden at least 30 days before beginning cleaning work.

3.8 FINAL CLEANING

A. After mortar has fully hardened, thoroughly clean exposed stone surfaces of excess mortar and foreign matter; use wood scrapers, stiff-nylon or -fiber brushes, and clean water, spray applied at low pressure.
1. Do not use metal scrapers or brushes.
2. Do not use acidic or alkaline cleaners.

B. Wash adjacent woodwork and other non-stone surfaces. Use detergent and soft brushes or cloths.

C. Clean mortar and debris from roof; remove debris from gutters and downspouts. Rinse off roof and flush gutters and downspouts.

D. Sweep and rake adjacent pavement and grounds to remove mortar and debris. Where necessary, pressure wash pavement surfaces to remove mortar, dust, dirt, and stains.

3.9 FIELD QUALITY CONTROL

A. Inspectors: Owner will engage qualified independent inspectors to perform inspections and prepare test reports. Allow inspectors use of lift devices and scaffolding, as needed, to perform inspections.

B. Architect's Project Representatives: Architect will assign Project representatives to help carry out Architect's responsibilities at the site, including observing progress and quality of portion of the Work completed. Allow Architect's Project representatives use of lift devices and scaffolding, as needed, to observe progress and quality of portion of the Work completed.

C. Notify Architect's Project representatives in advance of times when lift devices and scaffolding will be relocated. Do not relocate lift devices and scaffolding until Architect's Project representatives have had reasonable opportunity to make observations of work areas at lift device or scaffold location.

END OF SECTION 04 01 40

SECTION 04 03 21 – CONSERVATION OF HISTORIC TERRA COTTA MASONRY

PART 1 - GENERAL

1.1 RELATED DOCUMENTS

1.2 SUMMARY

A. Section includes historic treatment work consisting of repairing historic terra cotta masonry as follows:
   1. Cleaning surfaces.

B. Related Requirements:
   1. Section 01 35 91 "Historic Treatment Procedures" for general historic treatment requirements.

1.3 DEFINITIONS

A. Very Low-Pressure Spray: Under 100 psi.

B. Low-Pressure Spray: 100 to 400 psi.

C. Medium-Pressure Spray: 400 to 800 psi.

D. High-Pressure Spray: 800 to 1200 psi.

E. Saturation Coefficient: Ratio of the weight of water absorbed during immersion in cold water to weight absorbed during immersion in boiling water; used as an indication of resistance of masonry units to freezing and thawing.

1.4 PREINSTALLATION MEETINGS

A. Preinstallation Conference: Conduct conference at Project site.
   1. Review minutes of Preliminary Historic Treatment Conference that pertain to masonry historic treatment and repair.
   2. Review methods and procedures related to repairing historic terra cotta masonry, including, but not limited to, the following:
      a. Historic treatment specialist's personnel, equipment, and facilities needed to make progress and avoid delays.
      b. Materials, material application, sequencing, tolerances, and required clearances.
      c. Quality-control program.
      d. Fire-protection plan.
      e. Terra cotta historic treatment program.
      f. Coordination with building occupants.

1.5 SEQUENCING AND SCHEDULING

A. Work Sequence: Perform masonry historic treatment work in the following sequence, which includes work specified in this and other Sections:
   1. Remove plant growth.
   2. Inspect masonry for open mortar joints and permanently or temporarily point them before cleaning to prevent intrusion of water and other cleaning materials into the wall.
   3. Remove paint.
   4. Clean masonry.

1.6 ACTION SUBMITTALS

A. Product Data: For each type of product.
   1. Include construction details, material descriptions, dimensions of individual components and profiles, and finishes.
   2. Include recommendations for product application and use.
   3. Include test data substantiating that products comply with requirements.

1.7 INFORMATIONAL SUBMITTALS

A. Quality-control program.

B. Terra cotta historic treatment program.

1.8 QUALITY ASSURANCE

A. Quality-Control Program: Prepare a written quality-control program for this Project to systematically demonstrate the ability of personnel to properly follow methods and use materials and tools without damaging masonry. Include provisions for supervising worker performance and preventing damage.

B. Terra Cotta Historic Treatment Program: Prepare a written, detailed description of materials, methods, equipment, and sequence of operations to be used for each phase of historic treatment work, including protection of surrounding materials and Project site.
   1. If materials and methods other than those indicated are proposed for any phase of historic treatment work, add to the quality-control program a written description of such materials and methods, including evidence of successful use on comparable projects, and demonstrations to show their effectiveness for this Project.

C. Cleaning Program: Prepare a written cleaning program for both buildings that describes cleaning process in detail, including materials, methods, and equipment to be used, protection of surrounding materials, and control of runoff during operations.
   1. Perform the work in compliance with historic guidelines established by the Secretary of the Interior and Standards for the Treatment of Historic Properties, unless otherwise indicated. Notify Architect of any discrepancies that may exist.
   2. If materials and methods other than those indicated are proposed for any phase of restoration work, add to the Quality-Control Program a written description of such materials and methods, including evidence of successful use on comparable projects, and demonstrations to show their effectiveness for this Project and worker's ability to use such materials and methods properly.

D. Cleaning and Repair Appearance Standard: Cleaned and repaired surfaces are to have a uniform appearance as viewed from 30 feet away by Architect. Perform additional paint and stain removal, general cleaning, and spot cleaning of small areas that are noticeably different, so that surface blends smoothly into surrounding areas.

E. Mockups: Prepare mockups of historic treatment to demonstrate aesthetic effects and to set quality standards for materials and execution and for fabrication and installation.
   1. Approval of mockups does not constitute approval of deviations from the Contract Documents contained in mockups unless Architect specifically approves such deviations in writing.
   2. Subject to compliance with requirements, approved mockups may become part of the completed Work if undisturbed at time of Substantial Completion.

1.9 DELIVERY, STORAGE, AND HANDLING

A. Deliver packaged materials to Project site in manufacturer's original and unopened containers, labeled with manufacturer's name and type of products.

B. Handle terra cotta units to prevent overstressing, chipping, defacement, and other damage.

1.10 FIELD CONDITIONS

A. Weather Limitations: Proceed with installation only when existing and forecasted weather conditions permit repair work to be performed according to product manufacturers' written instructions and specified requirements.

B. Temperature Limits: Repair terra cotta masonry only when air temperature is between 40 and 90 deg F (4 and 32 deg C) and is predicted to remain so for at least seven days after completion of the Work unless otherwise indicated.

PART 2 - PRODUCTS

2.1 PERFORMANCE REQUIREMENTS

A. Source Limitations: Obtain each type of material for repairing historic masonry (terra cotta, cement, sand, etc.) from single source with resources to provide materials of consistent quality in appearance and physical properties.

2.2 CLEANING MATERIALS

A. Water: Potable.

B. Hot Water: Water heated to a temperature of 140° to 160° F.

C. Mild Acidic Cleaner: Manufacturer's standard mildly acidic cleaner containing no muriatic (hydrochloric), hydrofluoric, or sulfuric acid; or ammonium bifluoride or chlorine bleaches.
   1. Products: Subject to compliance with requirements, provide the following
   2. available products that may be incorporated into the Work include, but are not limited to, the following:
      a. ABR Products, Inc.; X-190 Limestone & Concrete Cleaner.
      b. Diedrich Technologies Inc.; Envirorestore 100.
      c. Dominion Restoration Products, Inc.; DR-60 Stone and Masonry Cleaner.
      d. PROSOCO: Enviro Klean SafRestorer restoration cleaner.
      e. Cathedral Stone Products (equivalent).

2.3 ACCESSORY MATERIALS

A. Masking Tape: Nonstaining, nonabsorbent material; compatible with mortar, joint primers, sealants, and surfaces adjacent to joints; and that easily comes off entirely, including adhesive.

B. Other Products: Select materials and methods of use based on the following, subject to approval of a mockup:
   1. Previous effectiveness in performing work involved.
   2. Minimal possibility of damaging exposed surfaces.
   3. Consistency of each application.
   4. Uniformity of the resulting overall appearance.
   5. Do not use products or tools that could do the following:

a. Remove, alter, or harm the present condition or future preservation of existing surfaces, including surrounding surfaces not in Contract.
b. Leave residue on surfaces.

PART 3 - EXECUTION

3.1 PROTECTION

A. Protect persons, motor vehicles, surrounding surfaces of building being restored and building site from harm resulting from masonry restoration work.

B. Comply with chemical-cleaner manufacturer's written instructions for protecting building and other surfaces against damage from exposure to its products. Prevent chemical-cleaning solutions from coming into contact with people, motor vehicles, landscaping, buildings, and other surfaces that could be harmed by such contact.
1. Cover adjacent surfaces with materials that are proven to resist chemical cleaners used unless chemical cleaners being used will not damage adjacent surfaces. Use materials that contain only waterproof, UV-resistant adhesives. Apply masking agents to comply with manufacturer's written instructions. Do not apply liquid masking agent to painted or porous surfaces. When no longer needed, promptly remove masking to prevent adhesive staining.
2. Keep wall wet below area being cleaned to prevent streaking from runoff.
3. Do not clean masonry during winds of sufficient force to spread cleaning solutions to unprotected surfaces.
4. Neutralize and collect alkaline and acid wastes for disposal off Owner's property.
5. Dispose of runoff from cleaning operations by legal means and in a manner that prevents soil erosion, undermining of paving and foundations, damage to landscaping, and water penetration into building interiors.

C. Remove gutters and downspouts adjacent to masonry and store during masonry restoration and cleaning. Reinstall when masonry restoration and cleaning are complete.
1. Provide temporary rain drainage during work to direct water away from building.

3.2 CLEANING MASONRY, GENERAL

A. Proceed with cleaning in an orderly manner; work from bottom to top of each scaffold width and from one end of each elevation to the other. Ensure that dirty residues and rinse water will not wash over cleaned, dry surfaces.

B. Use only those cleaning methods indicated for each masonry material and location.
1. Do not use wire brushes or brushes that are not resistant to chemical cleaner being used. Do not use plastic-bristle brushes if natural-fiber brushes will resist chemical cleaner being used.
2. Use spray equipment that provides controlled application at volume and pressure indicated, measured at spray tip. Adjust pressure and volume to ensure that cleaning methods do not damage masonry.
   a. Equip units with pressure gages.
3. For chemical-cleaner spray application, use low-pressure tank or chemical pump suitable for chemical cleaner indicated, equipped with cone-shaped spray tip.
4. For water-spray application, use fan-shaped spray tip that disperses water at an angle of 25 to 50 degrees.
5. For heated water-spray application, use equipment capable of maintaining temperature between 140 and 160 deg F at flow rates indicated.
6. For steam application, use steam generator capable of delivering live steam at nozzle.

C. Perform each cleaning method indicated in a manner that results in uniform coverage of all surfaces, including corners, moldings, and interstices, and that produces an even effect without streaking or damaging masonry surfaces.

D. Water Application Methods:
   1. Water-Soak Application: Soak masonry surfaces by applying water continuously and uniformly to limited area for time indicated. Apply water at low pressures and low volumes in multiple fine sprays using perforated hoses or multiple spray nozzles. Erect a protective enclosure constructed of polyethylene sheeting to cover area being sprayed.
   2. Water-Spray Applications: Unless otherwise indicated, hold spray nozzle at least 6 inches from surface of masonry and apply water in horizontal back and forth sweeping motion, overlapping previous strokes to produce uniform coverage.

E. Steam Cleaning: Apply steam to masonry surfaces at the very low pressures indicated for each type of masonry material. Hold nozzle at least 6 inches from surface of masonry and apply steam in horizontal back and forth sweeping motion, overlapping previous strokes to produce uniform coverage.

F. Chemical-Cleaner Application Methods: Apply chemical cleaners to masonry surfaces to comply with chemical-cleaner manufacturer's written instructions; use brush application. Do not spray apply at pressures exceeding 50 psi. Do not allow chemicals to remain on surface for periods longer than those indicated or recommended by manufacturer.

G. Rinse off chemical residue and soil by working upward from bottom to top of each treated area at each stage or scaffold setting. Periodically during each rinse, test pH of rinse water running off of cleaned area to determine that chemical cleaner is completely removed.
   1. Apply neutralizing agent and repeat rinse if necessary to produce tested pH of between 6.7 and 7.5.

H. After cleaning is complete, remove protection no longer required. Remove tape and adhesive marks.

3.3 PRELIMINARY CLEANING

A. Removing Plant Growth: Completely remove visible plant, moss, and shrub growth from masonry surfaces. Carefully remove plants, creepers, and vegetation by cutting at roots and allowing to dry as long as possible before removal. Remove loose soil and debris from open masonry joints to whatever depth they occur.

B. Preliminary Cleaning: Before beginning general cleaning, remove extraneous substances that are resistant to cleaning methods being used. Extraneous substances include paint, calking, asphalt, and tar.
   1. Carefully remove heavy accumulations of material from surface of masonry with a sharp chisel. Do not scratch or chip masonry surface.
   2. Remove paint and calking with alkaline paint remover.
      a. Comply with requirements in "Paint Removal" Article.
      b. Repeat application up to two times if needed.
   3. Remove asphalt and tar with solvent-type paint remover.
      a. Comply with requirements in "Paint Removal" Article.
      b. Apply paint remover only to asphalt and tar by brush without prewetting.
      c. Allow paint remover to remain on surface for 10 to 30 minutes.
      d. Repeat application if needed.

3.4 CLEANING MASONRY

A. Mild Acidic Chemical Cleaning:
   1. Wet masonry with cold water applied by low-pressure spray.
   2. Apply cleaner to masonry in two applications by brush or low-pressure spray. Let cleaner remain on surface for period indicated below:
      a. As recommended by chemical-cleaner manufacturer.
      b. As established by mockup.
   3. Rinse with cold water applied by low-pressure spray to remove chemicals and soil.
   4. Repeat cleaning procedure above where required to produce cleaning effect established by mockup. Do not repeat more than once. If additional cleaning is required, use a steam cleaning.

3.5 FINAL CLEANING

A. Clean adjacent non-masonry surfaces. Use detergent and soft brushes or cloths.

B. Clean mortar and debris from roof; remove debris from gutters and downspouts. Rinse off roof and flush gutters and downspouts.

C. Remove masking materials, leaving no residues that could trap dirt.

END OF SECTION 04 03 21

SECTION 04 03 42 – CONSERVATION OF HISTORIC STONE MASONRY

PART 1 - GENERAL

1.1 SUMMARY

A. Section includes historic treatment work consisting of repairing or selective replacement of historic stone assemblies as follows:
   1. Repairing stone masonry, including crack injection, and replacing whole and partial units.
   2. Stone patching compound.
   3. Removing abandoned anchors.
   4. Painting steel uncovered during the Work.

B. Related Requirements:
   1. Division 01 Section "Historic Treatment Procedures."
   2. Division 04 Section “Historic Stone Consolidation Treatment" for repair of stone using chemical consolidation.

1.2 DEFINITIONS

A. Low-Pressure Spray: 100 to 400 psi; 4 to 6 gpm.

B. Face Bedding: Setting of stone with the rift or natural bedding planes (strata) vertical and parallel to the wall plane rather than horizontal or "naturally bedded," which holds bedding planes together by gravity.

C. Rebuilding (Setting) Mortar: Mortar used to set and anchor masonry in a structure, distinct from pointing mortar installed after masonry is set in place.

D. Rift: The most pronounced direction of splitting or cleavage of a stone.

E. Stone Terminology: ASTM C 119.

1.3 PREINSTALLATION MEETINGS

A. Preinstallation Conference: Conduct conference at Project site.
   1. Review minutes of Preliminary Historic Treatment Conference that pertain to stone historic treatment and repair.
   2. Review methods and procedures related to repairing historic stone masonry including, but not limited to, the following:
      a. Verify historic treatment specialist's personnel, equipment, and facilities needed to make progress and avoid delays.
      b. Materials, material application, sequencing, tolerances, and required clearances.
      c. Quality-control program.
      d. Fire-protection plan.
      e. Stone historic treatment program.
      f. Coordination with building occupants.

1.4 SEQUENCING AND SCHEDULING

A. Order sand and gray Portland cement for colored mortar immediately after approval of mockups. Take delivery of and store at Project site a sufficient quantity to complete Project.

B. Work Sequence: Perform stone historic treatment work in the following sequence, which includes work specified in this and other Sections:
   1. Remove plant growth.
   2. Inspect for open mortar joints and repair before cleaning to prevent the intrusion of water and other cleaning materials into the wall.
   3. Remove paint.
   4. Clean stone.
   5. Rake out mortar from joints surrounding stone to be replaced and from joints adjacent to stone repairs along joints.
   6. Repair stonework, including replacing existing stone with new stone. If required, repair backup masonry.
   7. Rake out mortar from joints to be repointed.
   8. Point mortar and sealant joints.
   9. After repairs and repointing have been completed and cured, perform a final cleaning to remove residues from this work.
   10. Where water repellents are to be used on or near stonework, delay application of these chemicals until after pointing and cleaning.

C. As scaffolding is removed, patch anchor holes used to attach scaffolding. Patch holes in stone according to "Stone Patching" Article. Patch holes in mortar joints according to Section 04 03 43 "Historic Stone Masonry Repointing."

1.5 SUBMITTALS

A. Product Data: For each type of product.
   1. Include construction details, material descriptions, dimensions of individual components and profiles, and finishes.
   2. Include recommendations for product application and use. Include test data substantiating that products comply with requirements.

B. Shop Drawings:
   1. Include plans, elevations, sections, and locations of stone repair work on the structure.
   2. Indicate complete dimensions for new stone units and their jointing, showing relation of existing to new units.
   3. Show partial replacement stone units (dutchmen).
   4. Indicate setting number of each new stone unit and its location on the structure in annotated plans and elevations.
   5. Show provisions for expansion joints or other sealant joints.
   6. Show provisions for flashing, lighting fixtures, conduits, and weep holes as required.
   7. Show replacement and repair anchors, including drilled-in pins. Include details of anchors within individual stone units, with locations of anchors and dimensions of holes and recesses in stone required for anchors, including direction and angle of holes for pins.
   8. Show locations of scaffolding and points of scaffolding in contact with masonry. Include details of each point of contact or anchorage.

C. Samples for Initial Selection: For the following:
   1. Colored Mortar: Submit sets of mortar that will be left exposed in the form of sample mortar strips, 6 inches long by 1/4 inch or 1/2-inch-wide, set in aluminum or plastic channels.
      a. Have each set contain a close color range of at least three Samples of different mixes of colored sands and cements that produce a mortar matching the existing, cleaned mortar when cured and dry.
      b. Submit with precise measurements on ingredients, proportions, gradations, and sources of colored sands from which each Sample was made.
   2. Each type of sand used for mortar; minimum 8 oz. of each in plastic screw-top jars.

a. For blended sands, provide Samples of each component and blend. Identify blend ratio.
b. Identify sources, both supplier and quarry, of each type of sand.

3. Patching Compound: Submit sets of patching compound Samples in the form of plugs (patches in drilled holes) in sample units of stone representative of the range of stone colors on the building.
   a. Have each set contain a close color range of at least three Samples of different mixes of patching compound that matches the variations in existing stone when cured and dry.
4. Include similar Samples of accessories involving color selection.

D. Samples for Verification: For the following:
1. Each type of replacement stone. Include sets of Samples to show full range of color, texture, grain, veining, and finish to be expected. Provide sets of at least three 12-by-12-inch Samples for each type, but no fewer than necessary to indicate full range and the proportion of variations within range.
2. Each type of patching compound in form of briquettes, at least 3 inches long by 1-1/2 inches wide. Document each Sample with manufacturer and stock number or other information necessary to order additional material.
3. Each type of adhesive.
4. Accessories: Each type of anchor, accessory, and miscellaneous support.

E. Qualification Data: For historic treatment specialists, including field supervisors and workers, and testing service.

F. Preconstruction Test Reports: For existing stone and mortar and replacement stone.

G. Stone historic treatment program.

1.6 QUALITY ASSURANCE

A. Historic Treatment Specialist Qualifications: A qualified historic stone repair specialist. Experience installing standard unit masonry or new stone masonry is insufficient experience for stone historic treatment work.
1. Historic Treatment Worker Qualifications: When stone units are being patched, assign at least one worker per crew who is trained and certified by manufacturer of patching compound to apply its products.

B. Quality-Control Program: Prepare a written quality-control program for this Project to systematically demonstrate the ability of personnel to properly follow methods and use materials and tools without damaging masonry. Include provisions for supervising worker performance and preventing damage.

C. Stone Historic Treatment Program: Prepare a written, detailed description of materials, methods, equipment, and sequence of operations to be used for each phase of the historic treatment work including protection of surrounding materials and Project site.
1. Include methods for keeping exposed mortar damp during curing period.
2. If materials and methods other than those indicated are proposed for any phase of historic treatment work, add to the quality-control program a written description of such materials and methods, including evidence of successful use on comparable projects, and demonstrations to show their effectiveness for this Project.

D. Mockups: Prepare mockups of historic treatment on existing surfaces to demonstrate aesthetic effects and to set quality standards for materials and execution and for fabrication and installation.

1. Stone Repair: Prepare sample areas for each type of stone indicated to have repair work performed. If not otherwise indicated, size each mockup not smaller than two adjacent whole units or approximately 48 inches in least dimension. Construct sample areas in locations in existing walls where directed by Architect unless otherwise indicated. Demonstrate quality of materials, workmanship, and blending with existing work. Include the following as a minimum:
   a. Replacement: Four stone units replaced.
   b. Partial Stone Replacement: Two partial stone replacements (dutchman repairs).
   c. Stone Plug Repair: Two stone plug repairs for each type of stone indicated to be plugged.
   d. Crack Injection: Apply crack injection in two separate areas**,** each approximately 36 inches long.
   e. Patching: Three small holes at least 1 inch in diameter.
2. Approval of mockups does not constitute approval of deviations from the Contract Documents contained in mockups unless Architect specifically approves such deviations in writing.
3. Subject to compliance with requirements, approved mockups may become part of the completed Work if undisturbed at time of Substantial Completion.

1.7 DELIVERY, STORAGE, AND HANDLING

A. Deliver stone units to Project site strapped together in suitable packs or pallets or in heavy-duty crates and protected against impact and chipping.

B. Deliver each piece of stone with code mark or setting number on unexposed face, corresponding to Shop Drawings, using non-staining paint.

C. Deliver packaged materials to Project site in manufacturer's original and unopened containers, labeled with manufacturer's name and type of products.

D. Store cementitious materials on elevated platforms, under cover, and in a dry location. Do not use cementitious materials that have become damp.

E. Store hydrated lime in manufacturer's original and unopened containers. Discard lime if containers have been damaged or have been opened for more than two days.

F. Store lime putty covered with water in sealed containers.

G. Store sand where grading and other required characteristics can be maintained and contamination avoided.

H. Handle stone to prevent overstressing, chipping, defacement, and other damage.

1.8 FIELD CONDITIONS

A. Weather Limitations: Proceed with installation only when existing and forecasted weather conditions permit repair work to be performed according to product manufacturers' written instructions and specified requirements.

B. Temperature Limits, General: Repair stone units only when air temperature is between 40 and 90 deg F and is predicted to remain so for at least seven days after completion of the Work unless otherwise indicated.

C. Cold-Weather Requirements: Comply with the following procedures for stone repair unless otherwise indicated:

1. When air temperature is below 40 deg F, heat mortar ingredients, repair materials, and existing stone to produce temperatures between 40 and 120 deg F.
2. When mean daily air temperature is below 40 deg F, provide enclosure and heat to maintain temperatures above 32 deg F within the enclosure for seven days after repair.

D. Hot-Weather Requirements: Protect stone repair when temperature and humidity conditions produce excessive evaporation of water from mortar and patching materials. Provide artificial shade and wind breaks and use cooled materials as required to minimize evaporation. Do not apply mortar to substrates with temperatures of 90 deg F and above unless otherwise indicated.

E. For manufactured repair materials, perform work within the environmental limits set by each manufacturer.

PART 2 - PRODUCTS

2.1 MATERIALS, GENERAL

A. Source Limitations: Obtain each type of material for repairing historic masonry (stone, cement, sand, etc.) from single source with resources to provide materials of consistent quality in appearance and physical properties.

2.2 MASONRY MATERIALS

A. Stone Matching Existing: Provide natural building stone of variety, color, texture, grain, veining, finish, size, and shape to match existing stone and with physical properties within 10 percent of those determined from preconstruction testing of selected existing stone.
1. For existing stone that exhibits a range of colors, textures, grains, veining, finishes, sizes, or shapes, provide stone that proportionally matches that range rather than stone that matches an individual color, texture, grain, veining, finish, size, or shape within that range.

B. Quarrying New Stone: Have quarry clearly label the direction of rift or bedding planes when rough stone is quarried, to facilitate cutting stones so that natural bedding planes are as required in "Cutting New Stone" Paragraph.

C. Cutting New Stone: Regardless of how existing stone was cut and set, cut each new stone so that, when it is set in final position, the rift or natural bedding planes match the rift of existing stones.

D. Salvaged Stone: Obtain from location indicated on Drawings. Clean off residual mortar.

2.3 MORTAR MATERIALS

A. Portland Cement: ASTM C 150/C 150M, Type I or Type II; white or gray, or both, where required for color matching of mortar.
1. Provide cement containing not more than 0.60 percent total alkali when tested according to ASTM C 114.

B. Factory-Prepared Lime Putty: ASTM C 1489.

C. Mortar Sand: ASTM C 144 unless otherwise indicated.
1. Match size, texture, and gradation of existing mortar sand as closely as possible. Blend several sands if necessary to achieve suitable match.
2. Colored Mortar: Provide natural sand of color necessary to produce required mortar color.

3. For exposed mortar, provide sand with rounded edges.

D. Mortar Pigments: ASTM C 979/C 979M, compounded for use in mortar mixes, and having a record of satisfactory performance in masonry mortars.
1. Provide materials from one of the following manufacturers:
a. Davis Colors.
b. Lanxess Corporation.
c. Solomon Colors, Inc.

E. Water: Potable.

2.4 MANUFACTURED REPAIR MATERIALS

A. Stone Patching Compound: Factory-mixed cementitious product that is custom manufactured for patching stone.
1. Products: Subject to compliance with requirements, provide the available products that may be incorporated into the Work include, but are not limited to, the following:
a. Cathedral Stone Products.
b. Conproco Corporation.
c. Edison Coatings, Inc.
d. KEIM Mineral Coatings of America.
e. Jahn Restoration Mortars.
2. Use formulation that is vapor and water permeable (equal to or more than the stone), exhibits low shrinkage, has lower modulus of elasticity than the stone units being repaired, and develops high bond strength to all stone types.
3. Use formulation having working qualities and retardation control to permit forming and sculpturing where necessary.
4. Formulate patching compound in colors, textures, and grain to match stone being patched. Provide sufficient number of colors to enable matching each piece of stone.

B. Cementitious Crack Filler: An ultrafine superplasticized grout that can be injected into cracks, is suitable for application to wet or dry cracks, exhibits low shrinkage, and develops high bond strength to all stone types.
1. Provide materials from one of the following manufacturers:
a. Cathedral Stone Products.
b. Edison Coatings, Inc.

C. Stone-to-Stone Adhesive: Two-part polyester or epoxy-resin stone adhesive with a 15- to 45-minute cure at 70 deg F, recommended in writing by adhesive manufacturer for type of stone repair indicated, and matching stone color.
1. Provide materials from one of the following manufacturers:
a. Akemi North America.
b. Bonstone Materials Corporation.
c. Edison Coatings, Inc.

2.5 ACCESSORY MATERIALS

A. Stone Anchors and Pins: Type and size indicated or, if not indicated, to match existing anchors in size and type. Fabricate anchors and pins from Type 304 stainless steel.

B. Setting Buttons and Shims: Resilient plastic, non-staining to stone, sized to suit joint thicknesses and bed depths of stone units, less the required depth of pointing materials unless removed before pointing.

C. Masking Tape: Non-staining, nonabsorbent material; compatible with mortar, joint primers, sealants, and surfaces adjacent to joints; and that easily comes off entirely, including adhesive.

D. Antirust Coating: Fast-curing, lead- and chromate-free, self-curing, universal modified-alkyd primer according to MPI #23 (surface tolerant, anticorrosive metal primer or SSPC-Paint 20 or SSPC-Paint 29 zinc-rich coating.
   1. Surface Preparation: Use coating requiring no better than SSPC-SP 2, "Hand Tool Cleaning," SSPC-SP 3, "Power Tool Cleaning," or SSPC-SP 6/NACE No. 3, "Commercial Blast Cleaning," surface preparation according to manufacturer's literature or certified statement.

E. Other Products: Select materials and methods of use based on the following, subject to approval of a mockup:
   1. Previous effectiveness in performing work involved.
   2. Minimal possibility of damaging exposed surfaces.
   3. Consistency of each application.
   4. Uniformity of the resulting overall appearance.
   5. Do not use products or tools that could do the following:
      a. Remove, alter, or harm the present condition or future preservation of existing surfaces, including surrounding surfaces not in contract.
      b. Leave residue on surfaces.

2.6 MORTAR MIXES

A. Preparing Lime Putty: Slake quicklime and prepare lime putty according to appendix in ASTM C 5 and to manufacturer's written instructions.

B. Measurement and Mixing: Measure cementitious materials and sand in a dry condition by volume or equivalent weight. Do not measure by shovel; use known measure. Mix materials in a clean, mechanical batch mixer.

C. Colored Mortar: Produce mortar of color required by using specified ingredients. Do not alter specified proportions without Architect's approval.
   1. Mortar Pigments: Where mortar pigments are indicated, do not add pigment exceeding 10 percent by weight of the cementitious or binder materials, except for carbon black which is limited to 2 percent, unless otherwise demonstrated by a satisfactory history of performance.

D. Do not use admixtures in mortar unless otherwise indicated.

E. Mixes: Mix mortar materials in the following proportions:
   1. Rebuilding (Setting) Mortar by Type: ASTM C 270, Proportion Specification, Type N or Type O unless otherwise indicated; with cementitious material limited to portland cement and lime.
   2. Colored Mortar: Add mortar pigments to produce exposed, setting (rebuilding) mortar of colors required.

PART 3 - EXECUTION

3.1 PROTECTION

A. Prevent mortar from staining face of surrounding stone and other surfaces.
   1. Cover sills, ledges, and other projecting items to protect them from mortar droppings.
   2. Keep wall area wet below rebuilding and pointing work to discourage mortar from adhering.

3. Immediately remove mortar splatters in contact with exposed masonry and other surfaces.

B. Remove gutters and downspouts and associated hardware adjacent to immediate work area and store during stone repair work. Reinstall when repairs are complete.
   1. Provide temporary rain drainage during work to direct water away from building.

3.2 STONE REPAIR, GENERAL

A. Repair Appearance Standard: Repaired surfaces are to have a uniform appearance as viewed from 25 feet away by Architect.

3.3 ABANDONED ANCHOR REMOVAL

A. Remove abandoned anchors, brackets, wood nailers, and other extraneous items no longer in use unless indicated to remain.
   1. Remove items carefully to avoid spalling or cracking stone.
   2. Notify Architect before proceeding if an item cannot be removed without damaging surrounding stone; do the following where directed:
      a. Cut or grind off item approximately 3/4 inch beneath surface and core drill a recess of same depth in surrounding stone as close around item as practical.
      b. Immediately paint exposed end of item with two coats of antirust coating, following coating manufacturer's written instructions and without exceeding manufacturer's recommended dry film thickness per coat. Keep paint off sides of recess.
   3. Patch or plug the hole where each item was removed unless directed to remove and replace the stone unit.

3.4 PAINTING STEEL UNCOVERED DURING THE WORK

A. Notify Architect if steel is exposed during stone removal. Where Architect determines that it is structural, or for other reasons cannot be totally removed, prepare and paint steel as follows:
   1. Surface Preparation: Remove paint, rust, and other contaminants according to SSPC-SP 2, "Hand Tool Cleaning," SSPC-SP 3, "Power Tool Cleaning," or SSPC-SP 6/NACE No. 3, "Commercial Blast Cleaning," as applicable to comply with paint manufacturer's recommended preparation.
   2. Antirust Coating: Immediately paint exposed steel with two coats of antirust coating, following coating manufacturer's written instructions and without exceeding manufacturer's recommended rate of application (dry film thickness per coat).

B. If on inspection and rust removal, the thickness of a steel member is found to be reduced from rust by more than 1/16 inch, notify Architect before proceeding.

3.5 CRACK INJECTION

A. General: Comply with cementitious crack-filler manufacturer's written instructions.

B. Drill 1/4-inch-diameter injection holes as follows:
   1. Transverse Cracks Less Than 3/8-inch-wide: Drill holes through center of crack at 12 to 18 inches on center.
   2. Transverse Cracks More Than 3/8-inch-wide: Drill holes through center of crack at 18 to 36 inches on center.
   3. Delaminations: Drill holes at approximately 18 inches on center, both vertically and horizontally.
   4. Drill holes 2 inches deep.

C. Clean out drill holes and cracks with compressed air and water. Remove dirt and organic matter, loose material, sealants, and failed crack repair materials.

D. Place plastic injection ports in drilled holes and seal face of cracks between injection ports with clay or other non-staining, removable plugging material. Leave openings at upper ends of cracks for air release.

E. Inject cementitious crack filler through ports sequentially, beginning at one end of area and working to opposite end; where possible, begin at lower end of injection area and work upward. Inject filler until it extrudes from adjacent ports. After port has been injected, plug with clay or other suitable material and begin injecting filler at adjacent port, repeating process until all ports have been injected.

F. Clean cementitious crack filler from face of stone before it sets by scrubbing with water.

G. After cementitious crack filler has set, remove injection ports, plugging material, and excess filler. Patch injection holes and surface of cracks as specified in "Stone Patching" Article.

3.6 STONE PATCHING

A. Patch the following stone units unless another type of repair or replacement is indicated:
   1. Units indicated to be patched.
   2. Units with holes.
   3. Units with chipped edges or corners. Patch chipped edges or corners measuring over 3/4 inch in least dimension.
   4. Units with small areas of deep deterioration. Patch deep deteriorations measuring over 3/4 inch in least dimension and over 1/4 inch deep.

B. Remove and replace existing patches where indicated.

C. Remove deteriorated material and remove adjacent material that has begun to deteriorate. Carefully remove additional material so patch does not have feathered edges but has square or slightly undercut edges on area to be patched and is at least 1/4-inch-thick, but not less than as recommended in writing by patching compound manufacturer.

D. Mask adjacent mortar joint or rake out for repointing if patch extends to edge of stone unit.

E. Mix patching compound in individual batches to match each stone unit being patched. Combine one or more colors of patching compound, as needed, to produce exact match.

F. Brush-coat stone surfaces with slurry coat of patching compound according to manufacturer's written instructions.

G. Place patching compound in layers as recommended in writing by patching compound manufacturer, but not less than 1/4 inch or more than 2 inches thick. Roughen surface of each layer to provide a key for next layer.
   1. Simple Details: Trowel, scrape, or carve surface of patch to match texture and surrounding surface plane or contour of the stone. Shape and finish surface before or after curing, as determined by testing, to best match existing stone.
   2. Carved Details: Build patch up 1/4 inch above surrounding stone and carve surface to match adjoining stone after patching compound has hardened.

H. Keep each layer damp for 72 hours or until patching compound has set.

I. Remove and replace patches with hairline cracks or that show separation from stone at edges, and those that do not match adjoining stone in color or texture.

3.7 FINAL CLEANING

A. After mortar has fully hardened, thoroughly clean exposed stone surfaces of excess mortar and foreign matter; use wood scrapers, stiff-nylon or -fiber brushes, and clean water applied by low-pressure spray.
   1. Do not use metal scrapers or brushes.
   2. Do not use acidic or alkaline cleaners.

B. Clean adjacent non-stone surfaces. Use detergent and soft brushes or cloths.

C. Clean mortar and debris from roof; remove debris from gutters and downspouts. Rinse off roof and flush gutters and downspouts.

D. Remove masking materials, leaving no residues that could trap dirt.

E. Sweep and rake adjacent pavement and grounds to remove mortar and debris. Where necessary, pressure wash pavement surfaces to remove mortar, dust, dirt, and stains.

3.8 FIELD QUALITY CONTROL

A. Architect's Project Representatives: Architect will assign Project representatives to help carry out Architect's responsibilities at the site, including observing progress and quality of portion of the Work completed. Allow Architect's Project representatives use of lift devices and scaffolding, as needed, to observe progress and quality of portion of the Work completed.

B. Notify Architect's Project representatives in advance of times when lift devices and scaffolding will be relocated. Do not relocate lift devices and scaffolding until Architect's Project representatives have had reasonable opportunity to make inspections and observations of work areas at lift device or scaffold location.

3.9 STONE-WASTE DISPOSAL

A. Salvageable Materials: Unless otherwise indicated, excess stone materials are Contractor's property.

B. Stone Waste: Remove stone waste and legally dispose of off Owner's property.

END OF SECTION 04 03 42

SECTION 05 50 00-METAL FABRICATIONS

PART 1 - GENERAL

1.1 SUMMARY

A. This Section includes the following:
   1. Steel framing and supports for applications where framing and supports are not specified in other Sections.
   2. Loose bearing and leveling plates.
   3. Miscellaneous steel trim including steel edgings and edge angles.
   4. Steel floor plates.

B. Products furnished, but not installed, under this Section include the following:
   1. Loose steel lintels.
   2. Anchor bolts, steel pipe sleeves, and wedge-type inserts indicated to be cast into concrete or built into unit masonry.
   3. Steel weld plates and angles for casting into concrete for applications where they are not specified in other Sections.

C. Related Sections include the following:
   1. Division 04 Masonry Sections for installing loose lintels, anchor bolts, and other items indicated to be built into masonry.
   2. Division 05 Section "Structural Steel Framing."

1.2 PERFORMANCE REQUIREMENTS

A. Thermal Movements: Provide exterior metal fabrications that allow for thermal movements resulting from the following maximum change (range) in ambient and surface temperatures by preventing buckling, opening of joints, overstressing of components, failure of connections, and other detrimental effects. Base engineering calculation on surface temperatures of materials due to both solar heat gain and nighttime-sky heat loss.
   1. Temperature Change (Range): 120° F, ambient; 180° F, material surfaces.

B. Structural Performance: Provide railings and connections capable of withstanding the effects of gravity loads and the following loads and stresses within limits and under conditions indicated, unless greater are required by code:
   1. Handrails:
      a. Uniform load of 50 lbf/ ft. applied in any direction.
      b. Concentrated load of 200 lbf applied in any direction.
      c. Uniform and concentrated loads need not be assumed to act concurrently.
   2. Top Rails of Guards:
      a. Uniform load of 50 lbf/ ft. applied horizontally and concurrently with 100 lbf/ ft. applied vertically downward.
      b. Concentrated load of 200 lbf applied at any point, in any direction.
      c. Uniform and concentrated loads need not be assumed to act concurrently.
   3. Infill of Guards:
      a. Concentrated load of 50 lbf applied horizontally on an area of 1 sq. ft.
      b. Infill load and other loads need not be assumed to act concurrently.

C. Control of Corrosion: Prevent galvanic action and other forms of corrosion by insulating metals and other materials from direct contact with incompatible materials.

1.3 SUBMITTALS

A. Product Data: For the following:
   1. Paint products.
   2. Grout.

B. Shop Drawings: Show fabrication and installation details for metal fabrications.
   1. Include plans, elevations, sections, and details of metal fabrications and their connections. Show anchorage and accessory items.
   2. Provide templates for anchors and bolts specified for installation under other Sections.

C. Welding certificates.

1.4 QUALITY ASSURANCE

A. Welding: Qualify procedures and personnel according to the following:
   1. AWS D1.1, "Structural Welding Code-Steel."

1.5 PROJECT CONDITIONS

A. Field Measurements: Verify actual locations of walls and other construction contiguous with metal fabrications by field measurements before fabrication and indicate measurements on Shop Drawings.
   1. Established Dimensions: Where field measurements cannot be made without delaying the Work, establish dimensions and proceed with fabricating metal fabrications without field measurements. Coordinate wall and other contiguous construction to ensure that actual dimensions correspond to established dimensions.
   2. Provide allowance for trimming and fitting at site.

1.6 COORDINATION

A. Coordinate installation of anchorages for metal fabrications. Furnish setting drawings, templates, and directions for installing anchorages, including sleeves, concrete inserts, anchor bolts, and items with integral anchors, that are to be embedded in concrete or masonry. Deliver such items to Project site in time for installation.

B. Coordinate installation of steel weld plates and angles for casting into concrete that are specified in this Section but required for work of another Section. Deliver such items to Project site in time for installation.

C. Coordinate support and anchorage; sizes, angles, and locations of drilled openings; and installation and tensioning requirements for cable railing systems with cable railing manufacturer.

PART 2 - PRODUCTS

2.1 METALS, GENERAL

A. Metal Surfaces, General: Provide materials with smooth, flat surfaces, unless otherwise indicated. For metal fabrications exposed to view in the completed Work, provide materials without seam marks, roller marks, rolled trade names, or blemishes.

2.2 FERROUS METALS

A. Steel Plates, Shapes, and Bars: ASTM A 36/A 36M.

B. Steel Tubing: ASTM A 500, cold-formed steel tubing.

C. Steel Pipe: ASTM A 53/A 53M, standard weight (Schedule 40), unless another weight is indicated or required by structural loads.

D. Abrasive-Surface Floor Plate: 1/4-inch aluminum plate with abrasive material metallically bonded to aluminum; with texture equivalent to SlipNOT Grade 1 (Fine) texture. Unless otherwise indicated, provide floor plate in single piece, full width and length of area.
   1. Products: Subject to compliance with requirements, provide the following:
      a. IKG Industries, a division of Harsco Corporation.
      b. SlipNOT Metal Safety Flooring.
   2. Coat concealed surfaces of aluminum plate that contact cementitious surfaces or materials with manufacturers recommended protective coating.

2.3 FASTENERS

A. General: Unless otherwise indicated, provide Type 316 stainless-steel fasteners for exterior use and fasteners with coating complying with ASTM A325 hot-dip galvanized to ASTM A153/A153M, at interior locations. Select fasteners for type, grade, and class required.
   1. Copper-Alloy (Bronze) Items: Silicon bronze (Alloy 651 or Alloy 655) fasteners.
   2. Stainless-Steel Items: Type 316 stainless-steel fasteners.
   3. Dissimilar Metals: Type 316 stainless-steel fasteners.

B. Steel Bolts and Nuts: Regular hexagon-head bolts, ASTM A 307, Grade A; with hex nuts, ASTM A 563; and, where indicated, flat washers.

C. Stainless-Steel Bolts and Nuts: Regular hexagon-head annealed stainless-steel bolts, nuts and, where indicated, flat washers; ASTM F 593 for bolts and ASTM F 594 for nuts, Alloy Group 2.

D. Anchor Bolts: ASTM F 1554, Grade 36.
   1. Provide hot-dip anchor bolts where item being fastened is indicated to be galvanized.

E. Eyebolts: ASTM A 489.

F. Machine Screws: ASME B18.6.3.

G. Lag Bolts: ASME B18.2.1.

H. Wood Screws: Flat head, ASME B18.6.1.

I. Plain Washers: Round, ASME B18.22.1.

J. Lock Washers: Helical, spring type, ASME B18.21.1.

K. Cast-in-Place Anchors in Concrete: Anchors capable of sustaining, without failure, a load equal to four times the load imposed, as determined by testing according to ASTM E 488, conducted by a qualified independent testing agency.
   1. Threaded or wedge type; galvanized ferrous castings, either ASTM A 47/A 47M malleable iron or ASTM A 27/A 27M cast steel. Provide bolts, washers, and shims as needed, hot-dip galvanized per ASTM A 153/A 153M.

L. Expansion Anchors: Anchor bolt and sleeve assembly with capability to sustain, without failure, a load equal to six times the load imposed when installed in unit masonry and four times the load imposed when installed in concrete, as determined by testing according to ASTM E 488, conducted by a qualified independent testing agency.

1. Material for Anchors in Interior Locations: Carbon-steel components hot-dip galvanized to ASTM A153/A153M.
2. Material for Anchors in Exterior Locations: Alloy Group 2 stainless-steel bolts complying with ASTM F 593 and nuts complying with ASTM F 594.

2.4 MISCELLANEOUS MATERIALS

A. Welding Rods and Bare Electrodes: Select according to AWS specifications for metal alloy welded.

B. Shop Primers: Provide primers that comply with Division 09 Sections for “Paints and Coatings."

C. Galvanizing Repair Paint: High-zinc-dust-content paint for regalvanizing welds in steel, complying with SSPC-Paint 20.

D. Bituminous Paint: Cold-applied asphalt emulsion complying with ASTM D 1187.

E. Non-shrink, Nonmetallic Grout: Factory-packaged, non-staining, noncorrosive, nongaseous grout complying with ASTM C 1107. Provide grout specifically recommended by manufacturer for interior and exterior applications.

F. Concrete Materials and Properties: Comply with requirements in Division 03 Section "Cast-in-Place Concrete" for normal-weight, air-entrained, ready-mix concrete with a minimum 28-day compressive strength of 3000 psi, unless otherwise indicated.

2.5 FABRICATION, GENERAL

A. Shop Assembly: Preassemble items in the shop to greatest extent possible. Disassemble units only as necessary for shipping and handling limitations. Use connections that maintain structural value of joined pieces. Clearly mark units for reassembly and coordinated installation.

B. Cut, drill, and punch metals cleanly and accurately. Remove burrs and ease edges to a radius of approximately 1/32 inch, unless otherwise indicated. Remove sharp or rough areas on exposed surfaces.

C. Form bent-metal corners to smallest radius possible without causing grain separation or otherwise impairing work.

D. Form exposed work true to line and level with accurate angles and surfaces and straight edges.

E. Weld corners and seams continuously to comply with the following:
1. Use materials and methods that minimize distortion and develop strength and corrosion resistance of base metals.
2. Obtain fusion without undercut or overlap.
3. Remove welding flux immediately.
4. At exposed connections, finish exposed welds and surfaces smooth and blended so no roughness shows after finishing and contour of welded surface matches that of adjacent surface.

F. Form exposed connections with hairline joints, flush and smooth, using concealed fasteners where possible. Where exposed fasteners are required, use Phillips flat-head (countersunk) screws or bolts, unless otherwise indicated. Locate joints where least conspicuous.

G. Fabricate seams and other connections that will be exposed to weather in a manner to exclude water. Provide weep holes where water may accumulate.

H. Cut, reinforce, drill, and tap metal fabrications as indicated to receive finish hardware, screws, and similar items.

I. Provide for anchorage of type indicated; coordinate with supporting structure. Space anchoring devices to secure metal fabrications rigidly in place and to support indicated loads.
   1. Where units are indicated to be cast into concrete or built into masonry, equip with integrally welded steel strap anchors, 1/8 by 1-1/2 inches, with a minimum 6-inch embedment and 2-inch hook, not less than 8 inches from ends and corners of units and 24 inches on center, unless otherwise indicated.

2.6 MISCELLANEOUS FRAMING AND SUPPORTS

A. General: Provide steel framing and supports not specified in other Sections as needed to complete the Work.

B. Fabricate units from steel shapes, plates, and bars of welded construction, unless otherwise indicated. Fabricate to sizes, shapes, and profiles indicated and as necessary to receive adjacent construction retained by framing and supports. Cut, drill, and tap units to receive hardware, hangers, and similar items.
   1. Furnish inserts if units are installed after concrete is placed.

C. Galvanize miscellaneous framing and supports where indicated.

2.7 LOOSE STEEL LINTELS

A. Fabricate loose steel lintels from steel angles and shapes of size indicated for openings and recesses in masonry walls and partitions at locations indicated. Weld adjoining members together to form a single unit where indicated.

B. Size loose lintels to provide 8 inches bearing length at each side of openings, unless otherwise indicated.

C. Galvanize loose steel lintels located in exterior walls.

2.8 LOOSE BEARING AND LEVELING PLATES

A. Provide loose bearing and leveling plates for steel items bearing on masonry or concrete construction. Drill plates to receive anchor bolts and for grouting.

B. Galvanize loose steel bearing and leveling plates located in exterior walls.

2.9 STEEL WELD PLATES AND ANGLES

A. Provide steel weld plates and angles not specified in other Sections, for items supported from concrete construction as needed to complete the Work. Provide each unit with not less than two integrally welded steel strap anchors for embedding in concrete.

2.10 MISCELLANEOUS TRIM

A. Unless otherwise indicated, fabricate units from steel shapes, plates, and bars of profiles shown with continuously welded joints and smooth exposed edges. Miter corners and use concealed field splices where possible.

B. Provide cutouts, fittings, and anchorages as needed to coordinate assembly and installation with other work.

1. Provide with integrally welded steel strap anchors for embedding in concrete or masonry construction.

C. Galvanize exterior miscellaneous steel trim. Galvanize interior miscellaneous steel trim, where indicated.

2.11 FINISHES, GENERAL

A. Comply with NAAMM's "Metal Finishes Manual for Architectural and Metal Products" for recommendations for applying and designating finishes.

B. Finish metal fabrications after assembly.

2.12 STEEL AND IRON FINISHES

A. Galvanizing: Hot-dip galvanize items as indicated to comply with applicable standard listed below:
   1. Hot-dip galvanize exterior steel and iron railings, including hardware, after fabrication.
   2. ASTM A 123/A 123M, for galvanizing steel and iron products.
   3. ASTM A 153/A 153M, for galvanizing steel and iron hardware.

B. For galvanized railings, provide hot-dip galvanized fittings, brackets, sleeves, and other ferrous components.

C. Preparation for Shop Priming: Prepare ferrous-metal surfaces to comply with minimum requirements indicated below for SSPC surface preparation specifications and environmental exposure conditions of installed metal fabrications:
   1. Comply with requirements listed in Division 09 Section “Paints and Coatings”.

D. Shop Priming: Comply with requirements listed in Division 09 Section “Paints and Coatings”.
   1. Stripe paint corners, crevices, bolts, welds, and sharp edges.

PART 3 - EXECUTION

3.1 INSTALLATION, GENERAL

A. Cutting, Fitting, and Placement: Perform cutting, drilling, and fitting required for installing metal fabrications. Set metal fabrications accurately in location, alignment, and elevation; with edges and surfaces level, plumb, true, and free of rack; and measured from established lines and levels.

B. Fit exposed connections accurately together to form hairline joints. Weld connections that are not to be left as exposed joints but cannot be shop welded because of shipping size limitations. Do not weld, cut, or abrade surfaces of exterior units that have been hot-dip galvanized after fabrication and are for bolted or screwed field connections.

C. Fastening to In-Place Construction: Provide anchorage devices and fasteners where metal fabrications are required to be fastened to in-place construction. Provide threaded fasteners for use with concrete and masonry inserts, toggle bolts, through bolts, lag bolts, wood screws, and other connectors.

D. Provide temporary bracing or anchors in formwork for items that are to be built into concrete, masonry, or similar construction.

3.2 INSTALLING MISCELLANEOUS FRAMING AND SUPPORTS

A. General: Install framing and supports to comply with requirements of items being supported, including manufacturers' written instructions and requirements indicated on Shop Drawings.

3.3 INSTALLING BEARING AND LEVELING PLATES

A. Clean concrete and masonry bearing surfaces of bond-reducing materials, and roughen to improve bond to surfaces. Clean bottom surface of plates.

B. Set bearing and leveling plates on wedges, shims, or leveling nuts. After bearing members have been positioned and plumbed, tighten anchor bolts. Do not remove wedges or shims but, if protruding, cut off flush with edge of bearing plate before packing with grout.
   1. Use non-shrink grout, either metallic or non-metallic, in concealed locations where not exposed to moisture; use non-shrink, non-metallic grout in exposed locations, unless otherwise indicated.
   2. Pack grout solidly between bearing surfaces and plates to ensure that no voids remain.

3.4 ADJUSTING AND CLEANING

A. Galvanized Surfaces: Clean field welds, bolted connections, and abraded areas and repair galvanizing to comply with ASTM A 780.

END OF SECTION 05 50 00

SECTION 06 03 12 - HISTORIC WOOD REPAIR

PART 1 - GENERAL

1.1 RELATED DOCUMENTS

1.2 SUMMARY

A. Section includes historic treatment of wood in the form of repairing wood features as follows:
   1. Repairing wood trim.
   2. Replacing wood trim.
   3. Repairing, refinishing, and replacing hardware.

B. Related Requirements:
   1. Section 01 35 91 "Historic Treatment Procedures" for general historic treatment requirements.
   2. Section 02 41 19 "Selective Demolition" for historic removal and dismantling work.
   3. Section 08 03 52 "Historic Treatment of Wood Windows" for historic wood window repairs, including related trim.
   4. Section 08 03 14 "Historic Treatment of Wood Doors" for historic wood door repairs, including related trim.

1.3 PREINSTALLATION MEETINGS

A. Pre-installation Conference: Conduct conference at Project site.
   1. Review minutes of Preliminary Historic Treatment Conference that pertain to historic wood repair.
   2. Review methods and procedures related to historic wood repair, including, but not limited to, the following:
      a. Historic treatment specialist's personnel, equipment, and facilities needed to make progress and avoid delays.
      b. Materials, material application, sequencing, tolerances, and required clearances.
      c. Fire-protection plan.
      d. Wood historic treatment program.
      e. Coordination with building occupants.

1.4 SEQUENCING AND SCHEDULING

A. Perform historic wood repair in the following sequence, which includes work specified in this and other Sections:
   1. Before removing wood components for on-site or off-site repair, tag each component with location-identification numbers. Indicate on tags and building plans the locations of each component, such as *"Baseboard on North Side of Room 101."*
   2. Dismantle hardware and tag with location-identification numbers.
   3. In the shop, label each repaired component and whole or partial replacement with permanent location-identification number in inconspicuous location and remove site-applied tags.
   4. Sort units by condition, separating those that need extensive repair.
   5. Clean surfaces.
   6. General Wood-Repair Sequence:
      a. Remove paint to bare wood.
      b. Repair wood by consolidation, replacement, partial replacement, and patching.
      c. Sand, prime, fill, sand again, and prime surfaces again for refinishing.
   7. Repair, refinish, and replace hardware if required. Reinstall operating hardware.

8. Reinstall components.
9. Apply finish coats.
10. Install remaining hardware.

1.5 SUBMITTALS

A. Product Data: For each type of product.
   1. Include recommendations for product application and use. Include test data substantiating that products comply with requirements.

B. Shop Drawings:
   1. Include plans, elevations, and sections showing locations and extent of repair and replacement work, with enlarged details of replacement parts indicating materials, profiles, joinery, reinforcing, method of splicing or attaching wood members to other surfaces, accessory items, and finishes.
   2. Include field-verified dimensions and the following:
      a. Full-size shapes and profiles with complete dimensions for replacement components and their jointing, showing relationship of existing components to new components.
      b. Templates and directions for installing hardware and anchorages.
      c. Identification of each new unit and its corresponding location in the building on annotated plans and elevations.
      d. Provisions for sealant joints and flashing as required for location.

C. Samples for Initial Selection: For each type of exposed wood and finish.
   1. Identify wood species, cut, and other features.
   2. Include Samples of hardware and accessories involving color selection.

D. Samples for Verification: For the following products in manufacturer's standard sizes unless otherwise indicated, finished as required for use in the Work:
   1. Replacement Wood: 12-inch-long, full-size molding sections with applied finish.
      a. Additional Samples of replacement members that show fabrication techniques, materials, and finishes as requested by Architect.
   2. Repaired Wood: Prepare Samples using existing wood removed from site, repaired, and prepared for refinishing.
   3. Refinished Wood: Prepare Samples using existing wood removed from site, repaired, and refinished.
   4. Hardware: Full-size units with each factory-applied or restored finish.

E. Qualification Data: For historic treatment specialist including workers and wood-repair-material manufacturer.

F. Wood Historic Treatment Program: Submit before work begins.

G. Preconstruction Test Reports: For historic wood repair.

1.6 QUALITY ASSURANCE

A. Wood-Repair-Material Manufacturer Qualifications: A firm regularly engaged in producing wood consolidant and wood-patching compound that have been used for similar historic wood-treatment applications with successful results, and with factory-authorized service representatives who are available for consultation, Project-site inspection, and on-site assistance.

B. Wood Historic Treatment Program: Prepare a written, detailed description of materials, methods, equipment, and sequence of operations to be used for historic treatment work, including protection of surrounding materials and Project site.
   1. If materials and methods other than those indicated are proposed for any phase of historic treatment work, add a written description of such materials and methods, including evidence of successful use on comparable projects, and demonstrations to show their effectiveness for this Project.

C. Mockups: Prepare mockups of historic treatment repair processes to demonstrate aesthetic effects and to set quality standards for materials and execution, and for fabrication and installation. Prepare mockups so they are as inconspicuous as practicable.
   1. Locate mockups in locations that enable viewing under same conditions as the completed Work.
   2. Approval of mockups does not constitute approval of deviations from the Contract Documents contained in mockups unless Architect specifically approves such deviations in writing.
   3. Subject to compliance with requirements, approved mockups may become part of the completed Work if undisturbed at time of Substantial Completion.

1.7 PRECONSTRUCTION TESTING

A. Preconstruction Testing Service: Engage a qualified historic treatment specialist to perform preconstruction testing on historic wood materials as follows:
   1. Provide test specimens representative of proposed materials and existing construction.
   2. Test historic treatment products and methods for effectiveness and compliance with specified requirements.

1.8 DELIVERY, STORAGE, AND HANDLING

A. Pack, deliver, and store products in suitable packs, heavy-duty cartons, or wooden crates; surround with sufficient packing material to ensure that products will not be deformed, broken, or otherwise damaged.

B. Until installed, store products inside a well-ventilated area and protect from weather, moisture, soiling, abrasion, extreme temperatures, and humidity, and where environmental conditions comply with manufacturer's requirements.

1.9 FIELD CONDITIONS

A. Weather Limitations: Proceed with historic wood repair only when existing and forecasted weather conditions are within the environmental limits set by each manufacturer's written instructions and specified requirements.

PART 2 - PRODUCTS

2.1 HISTORIC WOOD REPAIR, GENERAL

A. Quality Standard: Comply with applicable requirements in Section 12, "Historic Restoration Work," and related requirements in AWI/AWMAC/WI's "Architectural Woodwork Standards" for construction, finishes, grade rules, and other requirements unless otherwise indicated.
   1. Exception: Industry practices cited in Section 12, Article 1.5, "Industry Practices," of the Architectural Woodwork Standards do not apply to the work of this Section.

2.2 REPLICATED WOOD ITEMS

A. Replicated Wood Trim: Custom-fabricated replacement wood units and components.
   1. Joint Construction: Joints matching existing joints.
   2. Wood Species: Match species of existing wood.
   3. Wood Cut: Match cut of existing wood.
   4. Wood Member and Trim Profiles: Match profiles and detail of existing.
   5. Hardware: Reuse existing unless otherwise indicated.

2.3 WOOD-REPLACEMENT MATERIALS

A. Wood, General: Clear fine-grained lumber; kiln dried to a moisture content of 6 to 12 percent at time of fabrication; free of visible finger joints, blue stain, knots, pitch pockets, and surface checks larger than 1/32-inch-deep by 2 inches wide.
   1. Species: Match species of each existing type of wood component or assembly unless otherwise indicated.

B. Exterior Trim: Match existing species.

2.4 WOOD-REPAIR MATERIALS

A. Source Limitations: Obtain wood consolidant and wood-patching compound from single source from single manufacturer.

B. Wood Consolidant: Ready-to-use product designed to penetrate, consolidate, and strengthen soft fibers of wood materials that have deteriorated due to weathering and decay and designed specifically to enhance the bond of wood-patching compound to existing wood.
   1. Abatron, Inc., Kenosha, WI.
   2. ConServ Epoxy LLC, Northford CT.
   3. Gougeon Brothers, Inc., Bay City, MI.
   4. Protective Coating Company, Allentown, PA.
   5. System Three Resins, Inc., Auburn, WA.

C. Wood-Patching Compound: Two-part, epoxy-resin, wood-patching compound; knife-grade formulation as recommended in writing by manufacturer for type of wood repair indicated, tooling time required for the detail of work, and site conditions. Compound shall be designed for filling voids in damaged wood materials that have deteriorated due to weathering and decay. Compound shall be capable of filling deep holes and spreading to featheredge.
   1. Abatron, Inc., Kenosha, WI.
   2. Advanced Repair Technology, Inc., Cherry Valley, NY.
   3. ConServ Epoxy LLC, Northford CT.
   4. Gougeon Brothers, Inc., Bay City, MI.
   5. Polymeric Systems, Inc., Elverson, PA.
   6. Protective Coating Company, Allentown, PA.
   7. System Three Resins, Inc., Auburn, WA.

2.5 HARDWARE

A. Hardware, General: Provide hardware required for each type of replicated or repaired wood, including but not limited to, hinges, pulls, latches, fasteners, and accessories indicated or required for proper operation. Hardware shall smoothly operate, tightly close, and secure units appropriately for frequency of use, unit weight, and dimensions.

2.6 MISCELLANEOUS MATERIALS

A. Borate Preservative Treatment: Inorganic, borate-based solution, with disodium octaborate tetrahydrate as the primary ingredient; manufactured for preserving weathered and decayed wood from further damage caused by fungi and wood-boring insects; complying with AWPA P5; containing no boric acid.

B. Cleaning Materials:
   1. Detergent Solution: Solution prepared by mixing 2 cups of tetrasodium pyrophosphate (TSPP), 1/2 cup of laundry detergent that contains no ammonia, 5 quarts of 5 percent sodium hypochlorite bleach, and 15 quarts of warm water for each 5 gal. of solution required.
   2. Mildewcide: Commercial, proprietary mildewcide or a solution prepared by mixing 1/3 cup of household detergent that contains no ammonia, 1 quart of 5 percent sodium hypochlorite bleach, and 3 quarts of warm water.

C. Adhesives: Wood adhesives with minimum 15- to 45-minute cure at 70° F, in gunnable and liquid formulations as recommended in writing by adhesive manufacturer for each type of repair and exposure condition.

D. Fasteners: Use fastener metals that are noncorrosive and compatible with each material joined.
   1. Match existing fasteners in material and type of fastener unless otherwise indicated.
   2. Use concealed fasteners for interconnecting wood components.
   3. Use concealed fasteners for attaching items to other work unless exposed fasteners are unavoidable or the existing fastening method.
   4. For fastening metals, use fasteners of same basic metal as fastened metal unless otherwise indicated.
   5. For exposed fasteners, use Phillips-type machine screws of head profile flush with metal surface unless otherwise indicated.
   6. Finish exposed fasteners to match finish of metal fastened unless otherwise indicated.

2.7 WOOD FINISHES

A. Unfinished Replacement Units: Provide exposed exterior and interior wood surfaces of replacement units unfinished; smooth, filled, and suitably prepared for on-site priming and finishing.

PART 3 - EXECUTION

3.1 HISTORIC TREATMENT SPECIALIST

A. Historic Treatment Specialist Firms: Subject to compliance with requirements.

3.2 PREPARATION

A. Protect adjacent materials from damage by historic wood repair.

B. Clean wood of mildew, algae, moss, plant material, loose paint, grease, dirt, and other debris by scrubbing with bristle brush or sponge and detergent solution. Scrub mildewed areas with mildewcide. After cleaning, rinse thoroughly with fresh water. Allow to dry before repairing or painting.

C. Condition replacement wood members and replacement units to prevailing conditions at installation areas before installing.

3.3 HISTORIC WOOD REPAIR, GENERAL

A. Historic Treatment Appearance Standard: Completed work is to have a uniform appearance as viewed by Architect from 20 feet away for exterior work.

B. General: In treating historic items, disturb them as minimally as possible and as follows:
   1. Stabilize and repair wood to reestablish structural integrity and weather resistance while maintaining the existing form of each item.
   2. Remove coatings and apply borate preservative treatment before repair. Remove coatings according to Section 09 91 00 "Paints and Coatings" unless otherwise indicated.
   3. Repair items in place where possible.
   4. Install temporary protective measures to protect wood-treatment work that is indicated to be completed later.
   5. Refinish historic wood according to Section 09 91 00 "Paints and Coatings" unless otherwise indicated.

C. Mechanical Abrasion: Where mechanical abrasion is needed for the work, use only the gentlest mechanical methods, such as scraping and natural-fiber bristle brushing, that will not abrade wood substrate, reducing clarity of detail. Do not use abrasive methods, such as sanding, wire brushing, or power tools, except as indicated as part of the historic treatment program and as approved by Architect.

D. Repair and Refinish Existing Hardware: Dismantle hardware; strip paint, repair, and refinish it to match finish samples; and lubricate moving parts just enough to function smoothly.

E. Repair Wood: Match existing materials and features, retaining as much original material as possible to perform repairs.
   1. Unless otherwise indicated, repair wood by consolidating, patching, splicing, or otherwise reinforcing wood with new wood matching existing wood or with salvaged, sound, original wood.
   2. Where indicated, repair wood by limited replacement matching existing material.

F. Replace Wood: Where indicated, duplicate and replace units with units made from salvaged, sound, original wood or with new wood matching existing wood. Use surviving prototypes to create patterns for duplicate replacements.
   1. Compatible substitute materials may be used.

G. Identify removed items with numbering system corresponding to item locations, to ensure reinstallation in same location. Key items to Drawings showing location of each removed unit. Permanently label units in a location that will be concealed after reinstallation.

3.4 WOOD PATCH-TYPE REPAIR

A. General: Patch wood that exhibits depressions, holes, or similar voids, and that has limited amounts of rotted or decayed wood.
   1. Verify that surfaces are sufficiently clean and free of paint residue prior to patching.
   2. Treat wood with wood consolidant prior to application of patching compound. Coat wood surfaces by brushing, applying multiple coats until wood is saturated and refuses to absorb more. Allow treatment to harden before filling void with patching compound.
   3. Remove rotted or decayed wood down to sound wood.

B. Apply borate preservative treatment to accessible surfaces either before applying wood consolidant or after removing rotted or decayed wood. Apply treatment liberally by brush to joints, edges, and ends; top, sides, and bottom. Allow treatment to dry.

C. Apply wood-patching compound to fill depressions, nicks, cracks, and other voids created by removed or missing wood.
   1. Prime patch area with application of wood consolidant or manufacturer's recommended primer.
   2. Mix only as much patching compound as can be applied according to manufacturer's written instructions.
   3. Apply patching compound in layers as recommended in writing by manufacturer until the void is completely filled.
   4. Sand patch surface smooth and flush with adjacent wood, without voids in patch material, and matching contour of wood member.
   5. Clean spilled compound from adjacent materials immediately.

3.5 WOOD-REPLACEMENT REPAIR

A. General: Replace parts of or entire wood items at locations indicated on Drawings and where damage is too extensive to patch.
   1. Remove surface-attached items from wood surface before performing wood-replacement repairs unless otherwise indicated.
   2. Verify that surfaces are sufficiently clean and free of paint residue prior to repair.
   3. Remove broken, rotted, and decayed wood down to sound wood.
   4. Custom fabricate new wood to replace missing wood; either replace entire wood member or splice new wood part into existing member.
   5. Secure new wood using finger joints, multiple dowels, or splines with adhesive and nailing to ensure maximum structural integrity at each splice. Use only concealed fasteners. Fill nail holes and patch surface to match surrounding sound wood.

B. Apply borate preservative treatment to accessible surfaces after replacements are made. Apply treatment liberally by brush to joints, edges, and ends; top, sides, and bottom.

C. Repair remaining depressions, holes, or similar voids with patch-type repairs.

D. Clean spilled materials from adjacent surfaces immediately.

E. Reinstall items removed for repair into original locations.

3.6 FIELD QUALITY CONTROL

A. Manufacturers Field Service: Engage wood-repair-material manufacturers' factory-authorized service representatives for consultation and Project-site inspection, and provide on-site assistance when requested by Architect.

3.7 ADJUSTMENT

A. Adjust existing and replacement operating items, hardware, and accessories for a tight fit at contact points and for smooth operation and tight closure. Lubricate hardware and moving parts.

3.8 CLEANING AND PROTECTION

A. Protect wood surfaces from contact with contaminating substances resulting from construction operations. Monitor wood surfaces adjacent to and below exterior concrete and masonry during construction for presence of dirt, scum, alkaline deposits, stains, or other contaminants. If contaminating substances contact wood surfaces, remove contaminants immediately.

B. Clean exposed surfaces immediately after historic wood repair. Avoid damage to coatings and finishes. Remove excess sealants, patching materials, dirt, and other substances.

END OF SECTION 06 03 12

SECTION 06 05 65 – SLATWALL PANELING

PART 1 - GENERAL

1.1 SUMMARY

A. Section Includes: T-Grooved composite panels, pre-engineered and machined for use with retail display hardware.

B. Products Not Furnished or Installed under This Section:
   1. Display fixtures, hooks or brackets arms.

1.2 REFERENCES

A. American Society for Testing and Materials: Standard Specifications (ASTM)
   1. ASTM E 84 - Standard Test Method for Surface Burning Characteristics of Building Materials.

B. Architectural Woodwork Standards as published by the Architectural Woodwork Institute, the Architectural Woodwork Manufacturers Association of Canada, and the Woodwork Institute.
   1. Architectural Woodwork Standards.

1.3 SUBMITTALS

A. Product Data: Submit sufficient manufacturer's data to indicate compliance with these specifications, including:
   1. Preparation instructions and recommendations.
   2. Storage and handling requirements and recommendations.
   3. Installation methods.

B. Shop Drawings: Submit elevations of each wall showing location of paneling and trim members with respect to all discontinuities in the wall elevation.

C. Selection Samples: Submit manufacturer’s standard color and pattern selection samples representing manufacturer's full range of available colors and patterns.
   1. Provide samples of edge trim as applicable.
   2. Provide samples for groove insert selection as applicable.

D. Samples for Verification: Submit sample for each component and for each exposed finish required, prepared on samples of size indicated below complete with exposed molding and trim samples. Sample to indicate type, finish, and color specified.
   1. Laminate and printed finishes: Submit 6” by 10” section of panel for each panel selected indicating the color, texture, and pattern required.
      a. Submit complete with specified applied finish.
      b. For selected patterns show complete pattern repeat.

E. Maintenance Instructions.

1.4 QUALITY ASSURANCE

A. Conform to building code requirements for interior finish for smoke and flame spread requirements as tested in accordance with:
   1. ASTM E 84 (Method of test for surface burning characteristics of building Materials)
   2. Required Rating – Class A.

1.5 DELIVERY, STORAGE AND HANDLING

A. Deliver panels and associated materials factory packaged on strong pallets and properly packaged or protected.
   1. Upon delivery carefully inspect all cartons, packages, pallets and protective wrap for damage or material shortage.
   2. Open and inspect suspect packages, cartons, or wrapped pallets for damage.
   3. Contact shipper immediately to report any damaged or missing materials.
   4. Contact manufacturer immediately to report any damaged or missing materials.

B. Store products in manufacturer's unopened packaging until ready for installation.
   1. Maintain plastic or other protective wrap in place during on site handling until ready for installation.
   2. Keep panels clean and do not stack panels after removal of protection.

C. Store and dispose of solvent-based materials, and materials used with solvent-based materials, in accordance with requirements of local authorities having jurisdiction.

1.6 PROJECT CONDITIONS

A. Wood composite panels are subject to the effects of humidity and temperature. Do not use in kitchens, rest rooms, or other high humidity areas.

B. Partition walls are to be finished and the building completely closed. Walls shall be thoroughly dry and concrete cured and dry before starting installation.

C. HVAC system must be operable and installation area must be balanced to normal operating conditions.

D. Maintain environmental conditions (temperature, humidity, and ventilation) within limits recommended by manufacturer for optimum results. To ensure product performance, a temperature range of 60°-80°F and a humidity range of 35-55% must be maintained during storage, installation and product life cycle. Do not install products under environmental conditions outside manufacturer's absolute limits.

1.7 COORDINATION AND SEQUENCING

A. Except as specified by the architect, it’s recommended to locate trim members so that panel lines coordinate with doors, headers, jambs and other discontinuities in a wall.

B. Vapor barrier shall be used on exterior walls behind backing to discourage warping.

1.8 WARRANTY

A. Standard Warranty: All products shall be warranted to be free from defects for a period of 30 days after installation.

PART 2 - PRODUCTS

2.1 MANUFACTURERS

A. Source Limitations: Obtain panels from single source from single manufacturer.

2.2 PANEL

A. Basis of Design:
   1. Marlite MDF Slatwall Panel: www.marlite.com

B. Panel Configuration: Engineered groove machined into wood composite substrate.
   1. Panel thickness: 3/4" thick with nominal 1/2" deep slotted grove.
   2. Panel face dimensions: 48" by 96".
   3. Slatwall panels grooves machined on 3" centers.

C. High internal bond wood composite substrate. Slatwall panels shall have formaldehyde emissions of 0.3 PPM or less and shall comply with HUD 24 CFR Part 3280 Standards set fourth for particleboard panels.
   1. Standard Slatwall
      a. Medium density wood fiberboard conforming to ANSI A208.2, industrial-grade MDF or other wood fiber substrates having not less than 75% recycled wood waste.

2.3 PANEL FINISH

A. Painted Finishes:
   1. Paint Grade: Smooth unfinished surface suitable for field or in-shop finishing.
   2. Primed Finish: Alkyd primer factory applied and baked creating a suitable surface for field finish in one coat.

2.4 PANEL GROOVE TREATMENT AND TRIM

A. Groove Treatment:
   1. Marlite 2000 Series.
      a. Painted groove.

B. Panel Trim:
   1. Outside/Inside Corner: Marlite A760: 1" x 1 " x 8'- 0" aluminum mill finish.
   2. Edge: Marlite A770: 1/2" x 3⁄4" x 8'- 0" aluminum mill finish.

2.5 INSTALLATION ACCESSORIES

A. Phillips, bugle head, coarse threaded screws.

B. Marlite Rail Assembly: Combination of Mounting Track and Panel Bar
   1. Steel prefinished at the factory. Silver Powder Coat
   2. P770 Edge: D100White.

C. Adhesives:
   1. Marlite Brand SS5262 Heavy Duty C-109 solvent based adhesive, unless otherwise approved by panel manufacturer.

2.6 FABRICATION

A. All framing, panels, hardware, and accessories shall be factory finished and ready to install except for field fabrication required by perimeter and corner conditions.

B. Refinish field cut panel edges in accordance with manufacturer's instruction before installation.

C. Fabrication Tolerances for panels:

1. Dimensional: ± 0.0625”
2. Square: ± 0.125” across diagonals
3. Thickness: ± 0.008”
4. Grooving: ± 0.031” (groove width and spacing between grooves)

PART 3 - EXECUTION

3.1 EXAMINATION

A. Installer's Examination: Examine conditions under which construction activities of this section are to be performed. Submit written notification to Architect and system manufacturer if such conditions are unacceptable. Beginning erection constitutes installer's acceptance of conditions.
   1. Verify that a vapor barrier has been provided on exterior walls behind backing to prevent warping.
   2. Verify backing panels are smooth, solid, and flat. All drywall joints are to be taped and finished.
   3. Verify that walls are primed before installation begins.
   4. Verify mechanical, electrical, and building service and/or items affecting work of this section are placed and ready to receive this work.
   5. Verify that stud spacing does not exceed 24” (600mm) on-center.

B. Structural walls are to be finished, with building completely closed. Walls shall be thoroughly dry before starting installation.

3.2 PREPARATION

A. Conditioning: Panels must be allowed to acclimate to a balanced environment in the installation location for 72 hours prior to installation.

B. Protect existing surfaces.

C. Except as directed by the architectural drawings, before installing, examine panels and arrange to achieve best combination of color, pattern, texture, and grain.

3.3 INSTALLATION

A. Install all materials in strict accordance with the manufacturer’s installation instructions with hardware straight, plumb, and level.
   1. Anchor units rigidly and securely in place.
   2. Cut sheets to meet existing supports.

B. Fasten initial bottom panel to the wall with #6 or #7 bugle head drywall screws. Install a minimum of one screw every third slot (or 9") vertically and every stud horizontally, typically every 16" on centers horizontally (maximum 24" on centers horizontally). Each 4' x 8' panel shall have minimum of 42 screws secured to studs or furring.
   1. Where screws do not hit the studs, fasten with adhesive in accordance with the manufacturer’s recommendations.
   2. Screws must be installed thru the panel grooves.
   3. Slatwall panels without inserts do not require pre-drilling.
   4. Slatwall panels with inserts require 5/32" pre-drilling of holes thru the insert and panel before fastening.

C. Avoid contamination of the panel faces with adhesives, solvents or cleaners during installation.

3.4 CLEANING AND PROTECTION

A. Clean and remove dust and other foreign matter from panel and framing surfaces. Clean finishes in accordance with manufacturer's instructions.

END OF SECTION 06 05 65

SECTION 06 10 00 - ROUGH CARPENTRY

PART 1 - GENERAL

1.1 SUMMARY

A. Section Includes:
   1. Wood blocking and nailers.
   2. Wood furring.
   3. Miscellaneous wood framing.

B. Related Requirements:
   1. Section 06 16 00 "Sheathing."

1.2 DEFINITIONS

A. Dimension Lumber: Lumber of 2 inches nominal or greater but less than 5 inches nominal in least dimension.

B. Lumber grading agencies, and the abbreviations used to reference them, include the following:
   1. NLGA: National Lumber Grades Authority.
   2. SPIB: The Southern Pine Inspection Bureau.
   3. WCLIB: West Coast Lumber Inspection Bureau.
   4. WWPA: Western Wood Products Association.

1.3 ACTION SUBMITTALS

A. Product Data: For each type of process and factory-fabricated product. Indicate component materials and dimensions and include construction and application details.
   1. Include data for wood-preservative treatment from chemical treatment manufacturer and certification by treating plant that treated materials comply with requirements. Indicate type of preservative used and net amount of preservative retained.
   2. For products receiving a waterborne treatment, include statement that moisture content of treated materials was reduced to levels specified before shipment to Project site.
   3. Include copies of warranties from chemical treatment manufacturers for each type of treatment.

1.4 INFORMATIONAL SUBMITTALS

A. Evaluation Reports: For the following, from ICC-ES:
   1. Wood-preservative-treated wood.
   2. Power-driven fasteners.
   3. Expansion anchors.

1.5 QUALITY ASSURANCE

A. Testing Agency Qualifications: For testing agency providing classification marking for fire-retardant treated material, an inspection agency acceptable to authorities having jurisdiction that periodically performs inspections to verify that the material bearing the classification marking is representative of the material tested.

1.6 DELIVERY, STORAGE, AND HANDLING

A. Stack lumber flat with spacers beneath and between each bundle to provide air circulation. Protect lumber from weather by covering with waterproof sheeting, securely anchored. Provide for air circulation around stacks and under coverings.

PART 2 - PRODUCTS

2.1 WOOD PRODUCTS, GENERAL

A. Lumber: DOC PS 20 and applicable rules of grading agencies indicated. If no grading agency is indicated, provide lumber that complies with the applicable rules of any rules-writing agency certified by the ALSC Board of Review. Provide lumber graded by an agency certified by the ALSC Board of Review to inspect and grade lumber under the rules indicated.
   1. Factory mark each piece of lumber with grade stamp of grading agency.
   2. Where nominal sizes are indicated, provide actual sizes required by DOC PS 20 for moisture content specified. Where actual sizes are indicated, they are minimum dressed sizes for dry lumber.
   3. Provide dressed lumber, S4S, unless otherwise indicated.

B. Maximum Moisture Content of Lumber: 15 percent for 2-inch nominal thickness or less, 19 percent for more than 2-inch nominal thickness unless otherwise indicated.

2.2 WOOD-PRESERVATIVE-TREATED LUMBER

A. Preservative Treatment by Pressure Process: AWPA U1; Use Category UC2.
   1. Preservative Chemicals: Acceptable to authorities having jurisdiction and containing no arsenic or chromium.

B. Kiln-dry lumber after treatment to a maximum moisture content of 19 percent. Do not use material that is warped or that does not comply with requirements for untreated material.

C. Mark lumber with treatment quality mark of an inspection agency approved by the ALSC Board of Review.

D. Application: Treat items indicated on Drawings, and the following:
   1. Wood nailers, curbs, equipment support bases, blocking, stripping, and similar members in connection with roofing, flashing, vapor barriers, and waterproofing.
   2. Wood sills, sleepers, blocking, furring, stripping, and similar concealed members in contact with masonry or concrete.
   3. Wood framing and furring attached directly to the interior of below-grade exterior masonry or concrete walls.

2.3 MISCELLANEOUS LUMBER

A. General: Provide miscellaneous lumber indicated and lumber for support or attachment of other construction, including the following:
   1. Blocking.
   2. Nailers.
   3. Furring.
   4. Grounds.

B. For items of dimension lumber size, provide Construction or No. 2 grade lumber and any of the following species:
   1. Hem-fir (north); NLGA.

2. Mixed southern pine; SPIB.
3. Hem-fir; WCLIB or WWPA.

C. For blocking and nailers used for attachment of other construction, select and cut lumber to eliminate knots and other defects that will interfere with attachment of other work.

D. For furring strips for installing plywood or hardboard paneling, select boards with no knots capable of producing bent-over nails and damage to paneling.

2.4 FASTENERS

A. General: Provide fasteners of size and type indicated that comply with requirements specified in this article for material and manufacture.
1. Where rough carpentry is exposed to weather, in ground contact, pressure-preservative treated, or in area of high relative humidity, provide fasteners with hot-dip zinc coating complying with ASTM A 153/A 153M or of Type 304 stainless steel.

B. Nails, Brads, and Staples: ASTM F 1667.

C. Power-Driven Fasteners: NES NER-272.

D. Wood Screws: ASME B18.6.1.

E. Lag Bolts: ASME B18.2.1.

F. Bolts: Steel bolts complying with ASTM A 307, Grade A; with ASTM A 563 hex nuts and, where indicated, flat washers.

G. Expansion Anchors: Anchor bolt and sleeve assembly of material indicated below with capability to sustain, without failure, a load equal to six times the load imposed when installed in unit masonry assemblies and equal to four times the load imposed when installed in concrete as determined by testing per ASTM E 488 conducted by a qualified independent testing and inspecting agency.
1. Material: Carbon-steel components, zinc plated to comply with ASTM B 633, Class Fe/Zn 5.

PART 3 - EXECUTION

3.1 INSTALLATION, GENERAL

A. Set rough carpentry to required levels and lines, with members plumb, true to line, cut, and fitted. Fit rough carpentry to other construction; scribe and cope as needed for accurate fit. Locate furring, nailers, blocking, grounds, and similar supports to comply with requirements for attaching other construction.

B. Framing Standard: Comply with AF&PA's WCD 1, "Details for Conventional Wood Frame Construction," unless otherwise indicated.

C. Do not splice members between supports unless otherwise indicated.

D. Provide blocking and framing as indicated and as required to support facing materials, fixtures, specialty items, and trim.

E. Sort and select lumber so that natural characteristics will not interfere with installation or with fastening other materials to lumber. Do not use materials with defects that interfere with

function of member or pieces that are too small to use with minimum number of joints or optimum joint arrangement.

F. Comply with AWPA M4 for applying field treatment to cut surfaces of preservative-treated lumber.
   1. Use inorganic boron for items that are continuously protected from liquid water.
   2. Use copper naphthenate for items not continuously protected from liquid water.

G. Securely attach rough carpentry work to substrate by anchoring and fastening as indicated, complying with the following:
   1. NES NER-272 for power-driven fasteners.
   2. Table 2304.9.1, "Fastening Schedule," in ICC's International Building Code.

H. Use screw or bolt fasteners unless otherwise indicated. Make tight connections between members. Install fasteners without splitting wood. Slightly countersink fastener heads, unless otherwise indicated.

3.2 WOOD BLOCKING AND NAILER INSTALLATION

A. Install where indicated and where required for attaching other work. Form to shapes indicated and cut as required for true line and level of attached work. Coordinate locations with other work involved.

B. Attach items to substrates to support applied loading. Recess bolts and nuts flush with surfaces unless otherwise indicated.

C. Where wood-preservative-treated lumber is installed adjacent to metal decking, install continuous flexible flashing separator between wood and metal decking.

D. Install wood nailers at parapet copings, at perimeters of roof, at roof membrane terminations and offsets, and around all roof openings and projections. Coordinate locations with roofing contractor.
   1. Anchor to roof deck or wall construction at maximum 2’-0” on center, Install fasteners within 6 inches of each end. Spacing and fastener embedment shall conform to Factory Mutual Loss Prevention Data Sheet 1-49.
   2. Install nailers to resist force of 200 lbs/lf in any direction. Provide 1/2-inch space between adjacent lengths of nailers.
   3. Height of nailers shall match surface level of roof insulation, unless otherwise indicated.

3.3 PROTECTION

A. Prevent direct contact between preservative-treated wood members and aluminum building components with either a minimum 1/4-inch polyethylene or nylon spacer or a minimum 10 mil polyethylene separation film.

B. Protect rough carpentry from weather. If, despite protection, rough carpentry becomes wet, apply EPA-registered borate treatment. Apply borate solution by spraying to comply with EPA-registered label.

END OF SECTION 06 10 00

SECTION 06 16 00 - SHEATHING

PART 1 - GENERAL

1.1 SUMMARY

A. Section Includes:
   1. Wall sheathing.
   2. Roof sheathing.

B. Related Requirements:
   1. Division 06 Section "Rough Carpentry" for plywood backing panels.

1.2 ACTION SUBMITTALS

A. Product Data: For each type of process and factory-fabricated product. Indicate component materials and dimensions and include construction and application details.

1.3 DELIVERY, STORAGE, AND HANDLING

A. Stack panels flat with spacers beneath and between each bundle to provide air circulation. Protect sheathing from weather by covering with waterproof sheeting, securely anchored. Provide for air circulation around stacks and under coverings.

PART 2 - PRODUCTS

2.1 WOOD PANEL PRODUCTS

A. Plywood: DOC PS 1.

B. Thickness: As needed to comply with requirements specified, but not less than thickness indicated.

C. Factory mark panels to indicate compliance with applicable standard.

2.2 PRESERVATIVE-TREATED PLYWOOD

A. Preservative Treatment by Pressure Process: AWPA U1; Use Category UC2 for interior construction not in contact with ground, Use Category UC3b for exterior construction not in contact with ground, and Use Category UC4a for items in contact with ground.
   1. Preservative Chemicals: Acceptable to authorities having jurisdiction and containing no arsenic or chromium.

B. Mark plywood with appropriate classification marking of an inspection agency acceptable to authorities having jurisdiction.

C. Application: Treat items indicated on Drawings and plywood in contact with masonry or concrete or used with flashing, vapor barriers, and waterproofing.

2.3 FIRE-RETARDANT-TREATED PLYWOOD

A. General: Where fire-retardant-treated materials are indicated, use materials complying with requirements in this article that are acceptable to authorities having jurisdiction and with fire-

test-response characteristics specified as determined by testing identical products per test method indicated by a qualified testing agency.

B. Fire-Retardant-Treated Plywood by Pressure Process: Products with a flame-spread index of 25 or less when tested according to ASTM E 84, and with no evidence of significant progressive combustion when the test is extended an additional 20 minutes, and with the flame front not extending more than 10.5 feet beyond the centerline of the burners at any time during the test.
   1. Use treatment that does not promote corrosion of metal fasteners.
   2. Interior Type A: Treated materials shall have a moisture content of 28 percent or less when tested according to ASTM D3201 at 92 percent relative humidity. Use where exterior type is not indicated.

C. Kiln-dry material after treatment to a maximum moisture content of 15 percent. Do not use material that is warped or does not comply with requirements for untreated material.

D. Identify fire-retardant-treated plywood with appropriate classification marking of qualified testing agency.

E. Application: Treat plywood indicated on Drawings, and the following:
   1. Roof and wall sheathing within 48 inches (1220 mm) of party walls.
   2. Subflooring and underlayment for raised platforms.

2.4 ROOF SHEATHING

A. Plywood Sheathing: DOC PS 1, Exterior, Structural I sheathing; fire-retardant-treated.
   1. Nominal Thickness: Not less than 5/8 inch.

2.5 WALL SHEATHING

A. Plywood Wall Sheathing: Exterior sheathing.
   1. Nominal Thickness: Not less than 5/8 inch.

2.6 FASTENERS

A. General: Provide fasteners of size and type indicated that comply with requirements specified in this article for material and manufacture.
   1. For wall sheathing, provide fasteners with hot-dip zinc coating complying with ASTM A 153/A 153M.

B. Nails, Brads, and Staples: ASTM F 1667.

C. Power-Driven Fasteners: NES NER-272.

D. Wood Screws: ASME B18.6.1.

2.7 MISCELLANEOUS MATERIALS

A. Adhesives for Field Gluing Panels to Framing: Formulation complying with APA AFG-01 that is approved for use with type of construction panel indicated by manufacturers of both adhesives and panels.

PART 3 - EXECUTION

3.1 INSTALLATION, GENERAL

A. Do not use materials with defects that impair quality of sheathing or pieces that are too small to use with minimum number of joints or optimum joint arrangement. Arrange joints so that pieces do not span between fewer than three support members.

B. Cut panels at penetrations, edges, and other obstructions of work; fit tightly against abutting construction unless otherwise indicated.

C. Securely attach to substrate by fastening as indicated, complying with the following:
   1. NES NER-272 for power-driven fasteners.
   2. Table 2304.9.1, "Fastening Schedule," in ICC's "International Building Code."

D. Select fasteners of size that will not fully penetrate members where opposite side will be exposed to view or will receive finish materials. Make tight connections. Install fasteners without splitting wood.

E. Coordinate wall sheathing installation with flashing and joint-sealant installation so these materials are installed in sequence and manner that prevent exterior moisture from passing through completed assembly.

F. Coordinate sheathing installation with installation of materials installed over sheathing so sheathing is not exposed to precipitation or left exposed at end of the workday when rain is forecast.

3.2 WOOD STRUCTURAL PANEL INSTALLATION

A. General: Comply with applicable recommendations in APA Form No. E30, "Engineered Wood Construction Guide," for types of structural-use panels and applications indicated.

B. Fastening Methods: Fasten panels as indicated below:
   1. Wall and Roof Sheathing:
      a. Screw or nail to wood framing.
      b. Space panels 1/8 inch apart at edges and ends.

END OF SECTION 06 16 00

SECTION 06 20 13 - FINISH CARPENTRY

PART 1 - GENERAL

1.1 SUMMARY

A. This Section includes the following:
   1. Standing and running trim.
   2. Storefront frames, jambs, and sills.
   3. Wood awning window, hardware, and screen in storefront transoms.
   4. Wood repair.
   5. Wood panels.
   6. Shop priming.

B. Related Sections include the following:
   1. Division 06 Section "Rough Carpentry" for furring, blocking, and other carpentry work not exposed to view.

1.2 DEFINITIONS

A. Wood Window Component Terminology: As identified in AWI's "Architectural Woodwork Quality Standards." Wood window components for storefront window work include the following classifications:
   1. Frame Components: Head, jamb, and sill.
   2. Sash Components: Stile and rails, parting bead, stop, and muntins.
   3. Exterior Trim: Exterior casing, brick mould, and drip cap.
   4. Interior Trim: Casing, stool, and apron.

B. Design Reference Sample: A Sample that represents Architect's pre-bid selection of work to be matched; it may be existing work or specially produced for Project.

C. Glazing: Includes glass, glazing points, glazing tapes, glazing sealants, and glazing compounds.

D. Window: Includes window frame and sash, unless otherwise indicated by the context.

E. MDX: The Drawing designation “MDX” is synonymous with the term “Exterior Composite Wood Panels”.

F. MDO: Plywood with a medium density overlay on the face.

1.3 SUBMITTALS

A. Product Data: For each type of process and factory-fabricated product. Indicate component materials, dimensions, profiles, textures, and colors and include construction and application details.
   1. Include data for wood-preservative treatment from chemical treatment manufacturer and certification by treating plant that treated materials comply with requirements. Indicate type of preservative used and net amount of preservative retained. Include chemical treatment manufacturer's written instructions for finishing treated material.

B. Shop Drawings: For wood storefront windows and components. Show location and extent of work, with enlarged details of parts indicating materials, profiles, joinery, reinforcing, method of

splicing into or attaching to existing construction, accessory items, and finishes. Include field-verified dimensions and the following:

1. Full-size shapes and profiles with complete dimensions for new components and their jointing.
2. Templates and directions for installing hardware and anchorages.
3. Component numbers and corresponding locations in the buildings on annotated plans and elevations.
4. Provisions for sealant joints, flashings, and weather-stripping as required for location.

C. Samples for Verification: For the following items of size indicated below, finished as required for use in the Work:

1. Component Samples: 12-inch-long, full-size, with applied finish, including parts of frame, exterior trim, and interior trim.
   a. Architect reserves the right to require additional Samples of replacement members that show fabrication techniques, materials, and finishes.
2. Hardware: Full-size units with factory-applied finishes.
3. Weather Stripping: 12-inch-long sections.

D. AWI Quality Standard: Comply with applicable requirements in AWI's "Architectural Woodwork Standards" for construction, finishes, grades of wood windows, and other requirements.

E. Pre-installation Conference: Conduct conference at Project site.

1. Review methods and procedures related to storefront windows including, but not limited to, the following:
   a. Construction Schedule: Verify availability of materials, personnel, equipment, and facilities needed to make progress and avoid delays.
   b. Materials, material application, sequencing, tolerances, and required clearances.

F. Certificate of Compliance: Submit manufacturer’s certificate of compliance indicating exterior grade treated wood composite panel complies with specified requirements.

1.4 DELIVERY, STORAGE, AND HANDLING

A. Protect materials against weather and contact with damp or wet surfaces. Stack lumber, plywood, and other panels flat with spacers between each bundle to provide air circulation. Provide for air circulation within and around stacks and under temporary coverings.

1.5 PROJECT CONDITIONS

A. Weather Limitations: Proceed with installation only when existing and forecasted weather conditions permit work to be performed and at least one coat of specified finish can be applied without exposure to rain, snow, or dampness.

1. For exterior ornamental wood columns, comply with manufacturer's written instructions and warranty requirements.

B. Do not install finish carpentry materials that are wet, moisture damaged, or mold damaged.

1. Indications that materials are wet or moisture damaged include, but are not limited to, discoloration, sagging, or irregular shape.
2. Indications that materials are mold damaged include, but are not limited to, fuzzy or splotchy surface contamination and discoloration.

PART 2 - PRODUCTS

2.1 MATERIALS

A. Exterior Wood: Central American or Honduran Mahogany (principally Swietenia Macrophylla).
   1. Grade: Finish or 1 Common grade.
   2. Non-water-repellent preservative treated.

B. Interior Wood: White Oak.
   1. Grade: Finish or 1 Common grade.
   2. Non-water-repellent preservative treated.

C. Exterior Composite Wood Panels (MDX): Exterior-grade, treated wood composite panel (for non-structural applications).
   1. Product: CMI; Extira Treated Exterior Composite Panels.
   2. Material: Wood fibers combined with phenolic resins, zinc borate, and water repellent; no added urea formaldehyde.
   3. Surface: Sanded 2 sides, smooth, unprimed.
   4. Substrate: 1-piece solid substrate, uniform density, not laminated. No knots or voids allowed.
   5. Thickness: As indicated on Drawings.
   6. Typical Properties (3/4-Inch Thickness):
      a. Density, ASTM D 1037: 47 pounds per cubic foot.
      b. Modulus of Rupture, ASTM D 1037: 3,550 psi.
      c. Modulus of Elasticity, ASTM D 1037: 315,000 psi.
      d. Internal Bond, ASTM D 1037: 92 psi.
      e. Direct Screw Withdrawal, ASTM D 1037:
         1) Face: 352 pounds.
         2) Edge: 235 pounds.
      f. 24-Hour Soak, ASTM D 1037:
         1) Thickness Swell: 3.3 percent.
      g. Accelerated Aging Test, 6-Cycle, ASTM D 1037: Retained 90 percent of original strength.
      h. Termite Resistance AWPA E7 Rating Scale, 3-Year Exposure: 7.9 out of 10.00.
      i. Rot Resistance, AWPA E16: 1.0 out of 5 (0.0 is highest rating)

D. Exterior Composite Wood Trim: Exterior-grade, treated wood composite trim (for non-structural applications).
   1. Product: CMI; MiraTEC Treated Exterior Composite Trim.
   2. Material: Wood fibers combined with phenolic resins, zinc borate, and water repellent; no added urea formaldehyde.
   3. Exposed Surface: Smooth, primed 4-sides.
   4. Substrate: 1-piece solid substrate, uniform density, not laminated. No knots or voids allowed.
   5. Sizes: As indicated on Drawings.
   6. Typical Properties (4/4-Inch Thickness):
      a. Density, ASTM D 1037: 49 pounds per cubic foot.
      b. Modulus of Rupture, ASTM D 1037: 3,900 psi.
      c. 24-Hour Soak, ASTM D 1037:
         1) Water Absorption: 7.6 percent.
         2) Thickness Swell: 1.9 percent.
      d. Accelerated Aging Test, 6-Cycle, ASTM D 1037: Retained 90 percent of original strength.
      e. Termite Resistance and Decay, AWPA E7 Rating Scale, 3-Year Exposure:
         1) Termite Resistance Score: 8.8 out of 10.

2) Termite Decay Score: 10 out of 10.

f. Rot Resistance, AWPA E10:

1) White Rot: 3.66 percent weight loss.

2) Brown Rot: 1.02 percent weight loss.

E. Bead Board: Moisture-resistant, exterior grade, 1/2-inch thickness, shiplap edge panels.

1. Basis of Design Product: Nantucket BeadBoard Co., Inc. (The); Nantucket BeadBoard MRX.

a. Width and Bead Configuration: 10 inches wide for 2 inch center to center beads with standard bead profile.

b. Thickness: 1/2 inch.

c. Finish: Factory-applied, acrylic latex primer.

F. MDO Trim and Plywood: Exterior Grade B-B MDO plywood.

2.2 WOOD REPAIR MATERIALS

A. Wood Consolidant: Ready-to-use product designed to penetrate, consolidate, and strengthen soft fibers of wood materials that have deteriorated due to weathering and decay and designed specifically to enhance the bond of wood-patching compound to existing wood.

1. Products: Subject to compliance with requirements, provide the following:

a. Abatron, Inc.; LiquidWood.

B. Wood-Patching Compound: Two-part epoxy-resin wood-patching compound; knife-grade formulation as recommended by manufacturer for type of wood repair indicated, tooling time required for the detail of work, and site conditions. Compound shall be designed for filling voids in damaged wood materials that have deteriorated due to weathering and decay. Compound shall be capable of filling deep holes and spreading to feather edge.

1. Products: Subject to compliance with requirements, provide the following:

a. Abatron, Inc.; LiquidWood with WoodEpox.

2.3 GLAZING MATERIALS

A. Glass and Glazing Materials: See Division 08 Section "Glazing."

B. Glass: Insulating-glass units according to Division 08 Section "Glazing."

2.4 MISCELLANEOUS MATERIALS

A. Transom Screen Units: Wood-framed; mortise and tenon, exterior glued joints; edge mounted wool pile bug strip.

1. Screen Mesh: 18 by 16, charcoal aluminum wire.

B. Fasteners: Comply with AWI "Quality Standards", premium grade, requirements for fabrication and with manufacturer's recommendations and standard industry practices for type and size of installation fasteners. Provide nails or screws, in sufficient length to penetrate not less than 1-1/2 inches into wood substrate.

1. For pressure-preservative-treated wood, provide hot-dip galvanized steel fasteners.
2. For composite wood, provide hot-dip galvanized or Type 304 stainless steel fasteners.
3. For applications not otherwise indicated, provide hot-dip galvanized steel fasteners.
4. For fabrication of wood windows, use brass or bronze dowels and screws.
5. For hardware and accessory installation use brass screws.
6. For wood trim, all stops use brass screws; all other wood trim to be nailed.

C. Adhesives: Wood adhesives for exterior exposure, with minimum 15- to 45-minute cure at 70° F, in gunnable and liquid formulations as recommended by adhesive manufacturer for each type of application.
   1. Exterior Composite Wood Adhesive: Provide adhesive tested and approved by adhesive manufacturer for use on exterior composite wood panel in exterior exposure.

D. Anchors, Clips, and Accessories: Fabricate anchors, clips, and window accessories of aluminum, nonmagnetic stainless steel, or hot-dip zinc-coated steel complying with requirements in ASTM B 633 for SC 3 (Severe) service condition.

E. Flashing: Comply with requirements in Division 07 Section "Sheet Metal Flashing and Trim" for flashing materials installed in finish carpentry.

F. Operable Transom Window Hardware: As indicated on Drawings.

G. Ventilation and Drainage Mat: Keene Building Envelope Products; Driwall Rainscreen 10 mm.

H. Sprayed Polyurethane Insulating Foam Sealant: One- or two-component, foamed-in-place, low-pressure formula designed not to bow or bend window and door frames, 1.5- to 2.0-lb/cu. ft. density; flame-spread index of 25 or less according to ASTM E 84.
   1. Products: Subject to compliance with requirements, provide one of the following:
      a. Dow; GREAT STUFF PRO Window & Door Insulating Foam Sealant.
   2. Fill cavities at jambs and heads with a spray foam insulation and elsewhere as indicated.

I. Sealants: Latex, complying with ASTM C 834, Type P, Grade NF and with applicable requirements in Division 07 Section "Joint Sealants," recommended by sealant manufacturer and manufacturer of substrates for intended application.
   1. Products: Subject to compliance with requirements, provide one of the following:
      a. Bostik Findley; Chem-Calk 600.
      b. Pecora Corporation; AC-20+.
      c. Schnee-Morehead, Inc.; SM 8200.
      d. BASF, Sonneborn; Sonolac.
      e. Tremco; Tremflex 834.

2.5 FABRICATION

A. Quality Standard: Unless otherwise indicated, comply with the "Architectural Woodwork Standards" for grades of wood frames indicated for construction, finishes, installation, and other requirements.
   1. The Contract Documents contain selections chosen from options in the quality standard and additional requirements beyond those of the quality standard. Comply with those selections and requirements in addition to the quality standard.
   2. Grade: Custom.

B. Back out or kerf backs of standing and running trim wider than 5 inches, except members with ends exposed in finished work.

C. Ease edges of lumber less than 1 inch in nominal thickness to 1/16-inch radius and edges of lumber 1 inch or more in nominal thickness to 1/8-inch radius.

D. Fabricate wood frames to dimensions, profiles, and details indicated. Ease edges to radius indicated for the following:
   1. Edges of Solid-Wood (Lumber) Members: 1/16 inch unless otherwise indicated.

2.6 SHOP FINISHING

A. Preparation for Finishing: Comply with referenced quality standard for sanding, filling countersunk fasteners, sealing concealed surfaces, and similar preparations for finishing wood frames, as applicable to each unit of work.
   1. Backpriming: Apply one coat of primer, compatible with finish coats, to concealed surfaces. Apply two coats to end-grain surfaces.
      a. Prime all exposed field-cut edges of exterior panels and trim using an acrylic latex primer recommended by the manufacturer for application over composite wood substrates.
      b. Coat all concealed and exposed surfaces including the bottom edges.

B. Opaque Finish for Finish Carpentry: Comply with Section 09 91 00 "Paints and Coatings."
   1. Finish composite wood trim and panels with two finish coats of paint within 90 days after installation. If the material is not painted within 90 days, reprime using an exterior primer that is recommended for use on composite wood products and is compatible with the topcoat to be used. Use the same primer for repair of any damage to the original factory applied primer.

PART 3 - EXECUTION

3.1 EXAMINATION

A. Examine substrates, with Installer present, for compliance with requirements for installation tolerances and other conditions affecting performance.

B. Examine finish carpentry materials before installation. Reject materials that are wet, moisture damaged, and mold damaged.

C. Proceed with installation only after unsatisfactory conditions have been corrected.

3.2 PREPARATION

A. Clean substrates of projections and substances detrimental to application.

B. Prime lumber to be painted, including both faces and edges. Cut to required lengths and prime ends. Comply with requirements in Division 09 Section "Paints and Coatings."

3.3 INSTALLATION, GENERAL

A. Grade: Install finish carpentry to comply with same grade as item being installed.

B. Do not use materials that are unsound, warped, improperly treated or finished, inadequately seasoned, or too small to fabricate with proper jointing arrangements.
   1. Do not use manufactured units with defective surfaces, sizes, or patterns.

C. Install finish carpentry level, plumb, true, and aligned with adjacent materials. Use concealed shims where necessary for alignment.
   1. Scribe and cut finish carpentry to fit adjoining work. Refinish and seal cuts.
   2. Install to tolerance of 1/8 inch in 96 inches for level and plumb. Install adjoining finish carpentry with 1/32-inch maximum offset for flush installation and 1/16-inch maximum offset for reveal installation.
   3. Coordinate finish carpentry with materials and systems in or adjacent to it. Provide cutouts for mechanical and electrical items that penetrate finish carpentry.

3.4 WOOD STOREFRONT WINDOW FRAMES

A. General: Replace existing wood storefront units with new custom-fabricated units at locations indicated on Drawings.

B. Grade: Install wood frames to comply with same grade as item to be installed.

C. Mill glazed members to accommodate glass thickness. Glaze units prior to installation where possible.

D. Assemble wood frames and complete fabrication at Project site to the extent that it was not completed in the shop.

E. Install wood frames level, plumb, true, and straight. Shim as required with concealed shims. Install level and plumb to a tolerance of 1/8 inch in 96 inches.

F. Set sill members in bed of sealant for weathertight construction unless otherwise indicated.

G. Anchor wood frames to anchors or blocking built in or directly attached to substrates. Secure with countersunk, concealed fasteners and blind nailing. Use fine finishing nails or finishing screws for exposed fastening, countersunk and filled flush with woodwork.
   1. For shop-finished items, use filler matching finish of items being installed.

H. Scribe and cut wood frames to fit adjoining work, refinish cut surfaces, and repair damaged finish at cuts.

I. Disposal of Removed Units: Remove from Owner's property and legally dispose of them.

3.5 STANDING AND RUNNING TRIM INSTALLATION

A. Install flat grain lumber with bark side exposed to weather.

B. Install trim with minimum number of joints practical, using full-length pieces from maximum lengths of lumber available. Do not use pieces less than 24 inches long except where necessary.
   1. Use scarf joints for end-to-end joints.
   2. Stagger end joints in adjacent and related members.

C. Fit exterior joints to exclude water. Cope at returns and miter at corners to produce tight-fitting joints with full-surface contact throughout length of joint. Plane backs of casings to provide uniform thickness across joints, where necessary for alignment.

D. Unless otherwise indicated, countersink fasteners, fill surface flush, and sand where face fastening is unavoidable.

E. Exterior Wood Panels and Trim:
   1. Cut, miter, and rout composite materials in accordance with manufacturer's instructions.
   2. Ensure composite materials are dry before installing or finishing.
   3. Fasten composite materials with adhesives, nails, and screws in accordance with manufacturer's instructions.
   4. Use adhesives in accordance with adhesive manufacturer's instructions.
   5. Position nails no closer than 1/2 inch from edges. Do not install nails into edges.

3.6 GLAZING

A. Install new glass with indicated glazing system and according to Division 08 Section "Glazing."

3.7 ADJUSTING

A. Replace finish carpentry that is damaged or does not comply with requirements. Finish carpentry may be repaired or refinished if work complies with requirements and shows no evidence of repair or refinishing. Adjust joinery for uniform appearance.

3.8 CLEANING

A. Clean finish carpentry on exposed and semi-exposed surfaces. Touch up factory-applied finishes to restore damaged or soiled areas.

3.9 PROTECTION

A. Remove and replace finish carpentry materials that are wet, moisture damaged, and mold damaged.
   1. Indications that materials are wet or moisture damaged include, but are not limited to, discoloration, sagging, or irregular shape.
   2. Indications that materials are mold damaged include, but are not limited to, fuzzy or splotchy surface contamination and discoloration.

B. Protect surfaces from contact with contaminating substances resulting from construction operations. Monitor surfaces adjacent to and below exterior concrete and masonry during construction for presence of dirt, scum, alkaline deposits, stains, or other contaminants. If contaminating substances contact surfaces, remove contaminants immediately according to glass manufacturer's written recommendations.

C. Clean exposed surfaces immediately after installation. Avoid damage to coatings and finishes. Remove excess sealants, glazing and patching materials, dirt, and other substances.

D. Remove and replace glass that has been broken, chipped, cracked, abraded, or damaged during construction period.

END OF SECTION 06 20 13

SECTION 06 40 23 - INTERIOR ARCHITECTURAL WOODWORK

PART 1 - GENERAL

1.1 SUMMARY

A. Section Includes:
   1. Wood casework.
   2. Interior standing and running trim.

B. Related Requirements:
   1. Section 06 20 23 “Interior Finish Carpentry” for interior wood trim.

1.2 COORDINATION

A. Coordinate sizes and locations of framing, blocking, furring, reinforcements, and other related units of Work specified in other Sections to support loads imposed by installed and fully loaded casework.

1.3 PREINSTALLATION MEETINGS

A. Preinstallation Conference: Conduct conference at Project site.

B. Keying Conference: Conduct conference at Project site. Incorporate keying conference decisions into final keying requirements.

1.4 ACTION SUBMITTALS

A. Product Data: For each type of product, including cabinet hardware and accessories and finishing materials and processes.

B. Shop Drawings: Show location of each item, dimensioned plans and elevations, large-scale details, finishes, attachment devices, and other components.
   1. Show locations and sizes of furring, blocking, and hanging strips, including concealed blocking and reinforcement specified in other Sections.
   2. Show locations and sizes of cutouts and holes for plumbing fixtures, faucets, soap dispensers, electrical switches and outlets, and other items installed in architectural woodwork.

1.5 QUALITY ASSURANCE

A. Fabricator Qualifications: Shop that employs skilled workers who custom-fabricate products similar to those required for this Project and whose products have a record of successful in-service performance.

B. Installer Qualifications: Fabricator of products.

1.6 DELIVERY, STORAGE, AND HANDLING

A. Do not deliver woodwork until painting and similar operations that could damage woodwork have been completed in installation areas. If woodwork must be stored in other than installation areas, store only in areas where environmental conditions comply with requirements specified in "Field Conditions" Article.

1.7 FIELD CONDITIONS

A. Environmental Limitations: Do not deliver or install woodwork until building is enclosed, wet work is complete, and HVAC system is operating and maintaining temperature between 60 and 90 deg F and relative humidity between 25 and 55 percent during the remainder of the construction period.

B. Field Measurements: Where woodwork is indicated to fit to other construction, verify dimensions of other construction by field measurements before fabrication, and indicate measurements on Shop Drawings. Coordinate fabrication schedule with construction progress to avoid delaying the Work.
   1. Locate concealed framing, blocking, and reinforcements that support woodwork by field measurements before being enclosed, and indicate measurements on Shop Drawings.
   2. Established Dimensions: Where field measurements cannot be made without delaying the Work, establish dimensions and proceed with fabricating woodwork without field measurements. Provide allowance for trimming at site, and coordinate construction to ensure that actual dimensions correspond to established dimensions.

PART 2 - PRODUCTS

2.1 ARCHITECTURAL WOODWORK, GENERAL

A. Quality Standard: Unless otherwise indicated, comply with the "Architectural Woodwork Standards" for grade of interior architectural woodwork fabrication, finish, installation, and other requirements.
   1. Grade: Custom.

2.2 MATERIALS

A. Wood Products: Provide materials that comply with requirements of referenced quality standard for each type of woodwork and quality grade specified unless otherwise indicated.
   1. Wood Moisture Content: 5 to 10 percent.

B. Composite Wood Products: Provide materials that comply with requirements of referenced quality standard for each type of woodwork and quality grade specified unless otherwise indicated.
   1. Medium-Density Fiberboard: ANSI A208.2, Grade 130, made with binder containing no urea formaldehyde.
   2. Moisture-Resistant Medium-Density Fiberboard: ANSI A208.2, Grade 155 MR50, made with binder containing no urea formaldehyde.
   3. Particleboard: ANSI A208.1, Grade M-2, made with binder containing no urea formaldehyde.
   4. Moisture-Resistant Particleboard: ANSI A208.1, Grade M-2-Exterior Glue.

C. Hardwood Lumber for Transparent Finish (Stain or Clear Finish):
   1. Wood Species and Cut: NHLA; vertical grain of quality suitable for transparent finish.
      a. Species: White oak.
      b. Cut: Plain sliced/plain sawn.

D. Lumber for Painted Finish:
   1. Wood Species: NHLA; Yellow poplar.
   2. Maximum Moisture Content: 19 percent with at least 85 percent of shipment at 12 percent or less.
   3. Finger Jointing: Allowed.
   4. Face Surface: Surfaced (smooth).

5. Optional Material: Primed MDF of same actual dimensions as lumber indicated may be used in lieu of lumber.

E. Veneer-Faced Panel Products (Hardwood Plywood): HPVA HP-1, made with adhesive containing no urea formaldehyde.
   1. Wood Species and Cut for Transparent Finish:
      a. Species: White oak.
      b. Cut: Plain sliced/plain sawn.

F. Thermoset Decorative Panels: Medium-density fiberboard made with binder containing no urea formaldehyde finished with thermally fused, melamine-impregnated decorative paper complying with requirements of NEMA LD 3, Grade VGL, for Test Methods 3.3, 3.4, 3.6, 3.8, and 3.10.

2.3 CABINET HARDWARE AND ACCESSORIES

A. General: Provide cabinet hardware and accessory materials associated with architectural cabinets, except for items specified in Division 08 Section "Door Hardware."
   1. Cabinet hardware shall be of all metal construction, meeting or exceeding the ANSI/BHMA A156.9, Grade 1 “performance” and “permanent set” test requirements, unless otherwise indicated.

B. Frameless Concealed Hinges: Fully adjustable, concealed, heavy gauge metal construction; 200,000 open-close cycle tested, with hinge manufacturer’s lifetime material replacement guarantee.
   1. Swing: 170 degrees.
   2. Finish: Nickel plated.
   3. Door Operation: Self closing and fitted with silencer bumpers.
   4. Basis of Design Product: Blum Clip Top 170 Degree Concealed Hinge.

C. Butt Hinges: 2-3/4-inch, five-knuckle, institutional, brushed stainless steel hinges made from 0.095-inch-thick metal, and as follows:
   1. Semiconcealed Hinges for Overlay Doors: BHMA A156.9, B01521.
   2. Provide magnetic door catch with maximum 5-pound pull, attached with screws and slotted for adjustment.

D. Wire Pulls: Back-mounted 10mm diameter; stainless steel, matt finish; Hafele Cat. No. 115.61.601.

E. Adjustable Shelf Standards and Brackets:
   1. Shelf Standards: Heavy-duty, 12 gage steel; anochrome finish. Model No. 87 ANO as manufactured by Knape & Vogt or approved equivalent.
   2. Shelf Bracket: Heavy-duty steel with single molded nylon cam lever; anochrome finish. Model No. 187LL ANO as manufactured by Knape & Vogt or approved equivalent.
      a. Screw attach shelf to shelf bracket with manufacturer’s standard anochrome steel clip.

F. Shelf Rests: Injection molded transparent polycarbonate friction fit into cabinet end panels and vertical dividers, adjustable on 32mm centers. Each shelf support shall have 2 integral support pins, 5mm diameter, to interface pre-drilled holes and to prevent accidental rotation of support.
   1. Support shall automatically adapt to 3/4 inch or 1-inch thick shelving and provide non-tip feature for shelving.
   2. Support shall be capable of supporting an imposed vertical load of 300 pounds without failure.

G. Drawer Slides: Side mounted; full-extension type; zinc-plated steel ball-bearing slides.

1. Medium Duty Drawers: Grade 1HD-100
    a. Drawers 24 Inches Wide or Less: All ball-bearing, rail mount, hold-in detent, with a 100 lb per pair load rating and progressive movement; Accuride 7432 or approved equivalent.
2. File Drawers and Heavy-Duty Drawers: Grade 1HD-200.
    a. Drawers Over 24 Inches to 42 inches Wide: All ball-bearing, rail/bracket mount, hold-in detent, with a 200 lb per pair load rating, and sequential movement; Accuride 3640 or approved equivalent.
3. Finish: Clear zinc

H. Locks:
1. Drawer Locks: BHMA A156.11, E07041; 5-pin keyway; capable of being keyed alike, keyed different, and/or master keyed

I. Exposed Hardware Finishes: For exposed hardware, provide finish that complies with BHMA A156.18 for BHMA finish number indicated.
1. Satin Chromium Plated: BHMA 626 for brass or bronze base; BHMA 652 for steel base.
2. Satin Stainless Steel: BHMA 630.

J. For concealed hardware, provide manufacturer's standard finish that complies with product class requirements in BHMA A156.9.

2.4 MISCELLANEOUS MATERIALS

A. Aluminum Trim: Extruded accessories of profiles and dimensions indicated; concealed fasteners.
1. Aluminum: Alloy and temper with not less than the strength and durability properties of ASTM B221, Alloy 6063-T5.
2. Finish: Satin anodized.

B. Stainless-Steel Sheet, Strip, Plate, and Flat Bar: ASTM A666, Type 304, No. 4 finish.

C. Furring, Blocking, Shims, and Hanging Strips: Fire-retardant-treated softwood lumber, kiln dried to less than 15 percent moisture content.

D. Anchors: Select material, type, size, and finish required for each substrate for secure anchorage. Provide nonferrous-metal or hot-dip galvanized anchors and inserts. Provide toothed-steel or lead expansion sleeves for drilled-in-place anchors.

E. Metal Support Brackets: Furniture grade, epoxy powder coated steel.
1. Provide metal wall bracket supports for all counters without supporting base cabinets; 48 inches maximum spacing.

F. Adhesives, General: Do not use adhesives that contain urea formaldehyde.

2.5 FABRICATION, GENERAL

A. Wood Moisture Content: Comply with requirements of referenced quality standard for wood moisture content in relation to ambient relative humidity during fabrication and in installation areas.

B. Fabricate woodwork to dimensions, profiles, and details indicated. Ease edges to radius indicated for the following:
1. Corners of Cabinets and Edges of Solid-Wood (Lumber) Members and Rails: 1/16 inch.

C. Back out or kerf backs of the following members except those with ends exposed in finished work:

1. Interior standing and running trim except shoe and crown molds.

D. Complete fabrication, including assembly, finishing, and hardware application, to maximum extent possible before shipment to Project site. Disassemble components only as necessary for shipment and installation. Where necessary for fitting at site, provide ample allowance for scribing, trimming, and fitting.
   1. Trial fit assemblies at fabrication shop that cannot be shipped completely assembled. Install dowels, screws, bolted connectors, and other fastening devices that can be removed after trial fitting. Verify that various parts fit as intended and check measurements of assemblies against field measurements indicated on Shop Drawings before disassembling for shipment.

E. Shop-cut openings to maximum extent possible to receive hardware, appliances, plumbing fixtures, electrical work, and similar items. Locate openings accurately and use templates or roughing-in diagrams to produce accurately sized and shaped openings. Sand edges of cutouts to remove splinters and burrs.
   1. Seal edges of openings in countertops with a coat of varnish.

2.6 FLUSH WOOD PANELING

A. Panel Core Construction: Particleboard or medium-density fiberboard.
   1. Thickness: 3/4 inch.

B. Exposed Panel Edges: Inset solid-wood or wood-veneer matching faces.

C. Panel Reveals: Matte black plastic laminate.

D. Assemble panels by gluing and concealed fastening.

2.7 WOOD CASEWORK FOR TRANSPARENT FINISH

A. Type of Construction: Frameless.

B. Cabinet and Door and Drawer Front Interface Style: Flush overlay.

C. Panel Core Construction: Particleboard or medium-density fiberboard.

D. Wood for Exposed Surfaces: As indicated.
   1. Grain Direction: Vertically for drawer fronts, doors, and fixed panels.

2.8 SHOP FINISHING

A. General: To the greatest maximum possible, finish architectural woodwork at fabrication shop as specified in this Section. Defer only final touchup, cleaning, and polishing until after installation.

B. Preparation for Shop-Applied Transparent Finishing: Comply with referenced quality standard for sanding, sealing concealed surfaces, and similar preparations for finishing architectural woodwork, as applicable to each unit of work.

C. Transparent Finish:
   1. Grade: Premium.
   2. Finish: System - 5, conversion varnish.
   3. Staining: As indicated in Finish and Materials Legend.
   4. Sheen: Satin, 31-45 gloss units measured on 60-degree gloss meter per ASTM D 523.

PART 3 - EXECUTION

3.1 PREPARATION

A. Before installation, condition woodwork to average prevailing humidity conditions in installation areas.

B. Before installing architectural woodwork, examine shop-fabricated work for completion and complete work as required, including removal of packing and backpriming.

3.2 INSTALLATION

A. Grade: Install woodwork to comply with requirements for the same grade specified in Part 2 for fabrication of type of woodwork involved.

B. Assemble woodwork and complete fabrication at Project site to comply with requirements for fabrication in Part 2, to extent that it was not completed in the shop.

C. Install woodwork level, plumb, true, and straight. Shim as required with concealed shims. Install level and plumb (including tops) to a tolerance of 1/8 inch in 96 inches.

D. Anchor woodwork to anchors or blocking built in or directly attached to substrates. Secure with countersunk, concealed fasteners and blind nailing as required for complete installation.

E. Scribe and cut woodwork to fit adjoining work, refinish cut surfaces, and repair damaged finish at cuts.

F. Standing and Running Trim: Install with minimum number of joints possible, using full-length pieces (from maximum length of lumber available) to greatest extent possible. Do not use pieces less than 60 inches long, except where shorter single-length pieces are necessary. Scarf running joints and stagger in adjacent and related members. Plane backs of trim to provide uniform thickness across joints where necessary for alignment.
   1. Match color and grain pattern of trim for transparent finish (stain or clear finish) across joints.
   2. Install trim after gypsum-board joint finishing operations are completed.
   3. Install without splitting; drill pilot holes before fastening where necessary to prevent splitting. Fasten to prevent movement or warping. Countersink fastener heads on exposed carpentry work and fill holes.
   4. Fill gaps, if any, between top of base and wall with plastic wood filler, sand smooth, and finish same as wood base if finished.
   5. Install adjoining interior trim with 1/32-inch maximum offset for flush installation and 1/16-inch maximum offset for reveal installation.

G. Cabinets: Install without distortion so doors and drawers fit openings properly and are accurately aligned. Adjust hardware to center doors and drawers in openings and to provide unencumbered operation. Complete installation of hardware and accessory items as indicated.
   1. Install cabinets with no more than 1/8 inch in 96-inch sag, bow, or other variation from a straight line.
   2. Maintain veneer sequence matching of cabinets with transparent finish.
   3. Fasten wall cabinets through back, near top and bottom, at ends and not more than 16 inches on center with No. 10 surface-bearing-head type screws sized for 1-1/2 inch (minimum) penetration into wood framing, blocking, or hanging strips.

H. Seal junctures of tops, sills, splashes, and walls with mildew-resistant silicone sealant or another permanently elastic sealing compound recommended by countertop material manufacturer.

3.3 ADJUSTING AND CLEANING

A. Repair damaged and defective woodwork, where possible, to eliminate functional and visual defects; where not possible to repair, replace woodwork. Adjust joinery for uniform appearance.

B. Clean, lubricate, and adjust hardware.

C. Clean woodwork on exposed and semiexposed surfaces. Touch up shop-applied finishes to restore damaged or soiled areas.

END OF SECTION 06 40 23

SECTION 07 01 50 - PREPARATION FOR REROOFING

PART 1 - GENERAL

1.1 SUMMARY

A. The Work of This Section Includes:
   1. Full roof tear-off.
   2. Roof re-cover preparation.
   3. Base flashing removal.
   4. Disposal.

B. Related Requirements:
   1. Section 011000 "Summary" for use of premises and for phasing requirements.
   2. Section 015000 "Temporary Facilities and Controls" for temporary construction and environmental-protection measures for reroofing preparation.

1.2 DEFINITIONS

A. EPS: Molded (expanded) polystyrene.

B. Full Roof Tear-off: Removal of existing roofing system down to existing roof deck.

C. OSB: Oriented strand board.

D. Partial Roof Tear-off: Removal of selected components and accessories from existing roofing system.

E. Roofing Terminology: Definitions in ASTM D1079 and glossary of NRCA's "The NRCA Roofing Manual: Membrane Roof Systems" apply to work of this Section.

F. Roof Re-Cover Preparation: Existing roofing system is to remain and be prepared for new roof installed over it.

1.3 PREINSTALLATION MEETINGS

A. Preliminary Roofing Conference: Before starting removal Work, conduct conference at Project site.
   1. Meet with Owner, Architect, Owner's insurer if applicable, roofing Installer, and installers whose work interfaces with or affects roofing, including installers of roof accessories and roof-mounted equipment.
   2. Review methods and procedures related to roofing tear-off, including, but not limited to, the following:
      a. Reroofing preparation, including roofing system manufacturer's written instructions.
      b. Temporary protection requirements for existing roofing system components that are to remain.
      c. Existing roof drains and roof drainage during each stage of reroofing, and roof-drain plugging and plug removal.
      d. Construction schedule and availability of materials, Installer's personnel, equipment, and facilities needed to avoid delays.
      e. Existing roof deck conditions requiring Architect notification.
      f. Existing roof deck removal procedures and Owner notifications.
      g. Condition and acceptance of existing roof deck and base flashing substrate for reuse.

h. Structural loading limitations of roof deck during reroofing.
i. Base flashings, special roofing details, drainage, penetrations, equipment curbs, and condition of other construction that affect reroofing.
j. HVAC shutdown and sealing of air intakes.
k. Shutdown of fire-suppression, -protection, and -alarm and -detection systems.
l. Asbestos removal and discovery of asbestos-containing materials.
m. Governing regulations and requirements for insurance and certificates if applicable.
n. Existing conditions that may require Architect notification before proceeding.

1.4 ACTION SUBMITTALS

A. Product Data: For each type of product.

B. Temporary Roofing Submittal: Product data and description of temporary roofing system.
1. If temporary roof remains in place, include surface preparation requirements needed to receive permanent roof, and submit a letter from roofing manufacturer stating acceptance of the temporary roof and that its inclusion does not adversely affect the new roofing system's resistance to fire and wind or specified special warranty.

1.5 INFORMATIONAL SUBMITTALS

A. Qualification Data: For Installer.

B. Photographs or Video: Show existing conditions of adjoining construction and site improvements, including exterior and interior finish surfaces, that might be misconstrued as having been damaged by reroofing operations.
1. Submit before Work begins.

1.6 CLOSEOUT SUBMITTALS

A. Certified statement from existing warranted roof system manufacturer stating that existing roof warranty has not been affected by Work performed under this Section.

1.7 QUALITY ASSURANCE

A. Regulatory Requirements:
1. Comply with governing EPA notification regulations before beginning roofing removal.
2. Comply with hauling and disposal regulations of authorities having jurisdiction.

1.8 FIELD CONDITIONS

A. Existing Roofing System: **EPDM** roofing.

B. Owner **will not** occupy portions of building immediately below reroofing area.
1. Conduct reroofing so Owner's operations are not disrupted.
2. Provide Owner with not less than 72 hours' written notice of activities that may affect Owner's operations.
3. Coordinate work activities daily with Owner so Owner has adequate advance notice to place protective dust and water-leakage covers over sensitive equipment and furnishings, shut down HVAC and fire-alarm or -detection equipment if needed, and evacuate occupants from below work area.
4. Before working over structurally impaired areas of deck, notify Owner to evacuate occupants from below affected area.
a. Verify that occupants below work area have been evacuated before proceeding with work over impaired deck area.

C. Protect building to be reroofed, adjacent buildings, walkways, site improvements, exterior plantings, and landscaping from damage or soiling from reroofing operations.

D. Maintain access to existing walkways, corridors, and other adjacent occupied or used facilities.

E. Conditions existing at time of inspection for bidding will be maintained by Owner as far as practical.

F. Weather Limitations: Proceed with reroofing preparation only when existing and forecasted weather conditions permit Work to proceed without water entering existing roofing system or building.
   1. Remove only as much roofing in one day as can be made watertight in the same day.

G. Hazardous Materials:
   1. It is not expected that hazardous materials, such as asbestos-containing materials, will be encountered in the Work.
      a. Hazardous materials will be removed by Owner before start of the Work.
      b. Existing roof will be left no less watertight than before removal.
   2. If materials suspected of containing hazardous materials are encountered, do not disturb; immediately notify Architect and Owner.
      a. Hazardous materials will be removed by Owner under a separate contract.
   3. A report on the presence of hazardous materials is on file for review and use. Examine report to become aware of locations where hazardous materials are present.
      a. Hazardous material remediation is specified elsewhere in the Contract Documents.
      b. Do not disturb hazardous materials or items suspected of containing hazardous materials except according to procedures specified elsewhere in the Contract Documents.
      c. Coordinate reroofing preparation with hazardous material remediation to prevent water from entering existing roofing system or building.

PART 2 - PRODUCTS

2.1 TEMPORARY PROTECTION MATERIALS

A. EPS Insulation: ASTM C578.

B. Plywood: DOC PS 1, Grade CD, Exposure 1.

C. OSB: DOC PS 2, Exposure 1.

2.2 TEMPORARY ROOFING MATERIALS

A. Design and selection of materials for temporary roofing are Contractor's responsibilities.

2.3 INFILL AND REPLACEMENT MATERIALS

A. Use infill materials matching existing roofing system materials unless otherwise indicated.
   1. Infill materials are specified in Section 075323 "Ethylene-Propylene-Diene-Monomer (EPDM) Roofing" unless otherwise indicated.

B. Wood blocking, curbs, and nailers are specified in Section 061000 "Rough Carpentry."

C. Plywood roof sheathing is specified in Section 061600 "Sheathing."

D. Fasteners: Factory-coated steel fasteners with metal or plastic plates listed in FM Approvals' RoofNav, and acceptable to new roofing system manufacturer.

2.4 AUXILIARY REROOFING MATERIALS

A. General: Use auxiliary reroofing preparation materials recommended by roofing system manufacturer for intended use and compatible with components of new roofing system.

PART 3 - EXECUTION

3.1 PREPARATION

A. Protection of In-Place Conditions:
   1. Protect existing roofing system that is not to be reroofed.
   2. Limit traffic and material storage to areas of existing roofing that have been protected.
   3. Maintain temporary protection and leave in place until replacement roofing has been completed. Remove temporary protection on completion of reroofing.
   4. Comply with requirements of existing roof system manufacturer's warranty requirements.

B. Seal or isolate windows that may be exposed to airborne substances created in removal of existing materials.

C. Shut off rooftop utilities and service piping before beginning the Work.

D. Test existing roof drains to verify that they are not blocked or restricted.
   1. Immediately notify Architect of any blockages or restrictions.

E. Coordinate with Owner to shut down air-intake equipment in the vicinity of the Work.
   1. Cover air-intake louvers before proceeding with reroofing work that could affect indoor air quality or activate smoke detectors in the ductwork.

F. During removal operations, have sufficient and suitable materials on-site to facilitate rapid installation of temporary protection in the event of unexpected rain.

G. Maintain roof drains in functioning condition to ensure roof drainage at end of each workday.
   1. Prevent debris from entering or blocking roof drains and conductors.
      a. Use roof-drain plugs specifically designed for this purpose.
      b. Remove roof-drain plugs at end of each workday, when no work is taking place, or when rain is forecast.
   2. If roof drains are temporarily blocked or unserviceable due to roofing system removal or partial installation of new roofing system, provide alternative drainage method to remove water and eliminate ponding.
      a. Do not permit water to enter into or under existing roofing system components that are to remain.

3.2 ROOF TEAR-OFF

A. Notify Owner each day of extent of roof tear-off proposed for that day.

B. Lower removed roofing materials to ground and onto lower roof levels, using dust-tight chutes or other acceptable means of removing materials from roof areas.

C. Full Roof Tear-off: Remove existing roofing and other roofing system components down to the existing roof structure.
   1. Remove substrate board, roof insulation, and cover board.

2. Remove base flashings and counter flashings.
3. Remove perimeter edge flashing and gravel stops.
4. Remove copings.
5. Remove expansion-joint covers.
6. Remove flashings at pipes, curbs, mechanical equipment, and other penetrations.
7. Remove roof drains indicated on Drawings to be removed.
8. Remove wood blocking, curbs, and nailers.
9. Remove fasteners from deck or cut fasteners off slightly above deck surface.

3.3 DECK PREPARATION

A. Inspect deck after tear-off of roofing system.

B. If broken or loose fasteners that secure deck panels to one another or to structure are observed, or if deck appears or feels inadequately attached, immediately notify Architect.
   1. Do not proceed with installation until directed by Architect.

C. If deck surface is unsuitable for receiving new roofing or if structural integrity of deck is suspect, immediately notify Architect.
   1. Do not proceed with installation until directed by Architect.

D. Provide additional deck securement as indicated on Drawings.

E. Replace plywood roof sheathing as indicated on Drawings.

3.4 INFILL MATERIALS INSTALLATION

A. Immediately after roof tear-off, and inspection and repair, if needed, of deck, fill in tear-off areas to match existing roofing system construction.
   1. Installation of infill materials is specified in Section 075323 "Ethylene-Propylene-Diene-Monomer (EPDM) Roofing."
   2. Installation of wood blocking, curbs, and nailers is specified in Section 061000 "Rough Carpentry."

B. Install new roofing patch over roof infill area.
   1. If new roofing is installed the same day tear-off is made, roofing patch is not required.

3.5 BASE FLASHING REMOVAL

A. Remove existing base flashings.
   1. Clean substrates of contaminants, such as asphalt, sheet materials, dirt, and debris.

B. Do not damage metal counterflashings that are to remain.
   1. Replace metal counterflashings damaged during removal with counterflashings of same metal, weight or thickness, and finish as existing.

C. Inspect parapet sheathing, wood blocking, curbs, and nailers for deterioration and damage.
   1. If parapet sheathing, wood blocking, curbs, or nailers have deteriorated, immediately notify Architect.

D. Remove existing parapet sheathing and replace with new parapet sheathing to comply with Section 061600 "Sheathing."
   1. If parapet framing, wood blocking, curbs, or nailers have deteriorated, immediately notify Architect.

E. When directed by Architect, replace parapet framing, wood blocking, curbs, and nailers to comply with Section 061000 "Rough Carpentry."

3.6 DISPOSAL

A. Collect demolished materials and place in containers.
   1. Promptly dispose of demolished materials.
   2. Do not allow demolished materials to accumulate on-site.
   3. Storage or sale of demolished items or materials on-site is not permitted.

B. Transport and legally dispose of demolished materials off Owner's property.

END OF SECTION 07 01 50

SECTION 07 19 00 - WATER REPELLENTS

PART 1 - GENERAL

1.1 SUMMARY

A. Section includes penetrating water-repellent treatments for the following vertical and horizontal surfaces:
   1. Clay brick masonry.

1.2 PREINSTALLATION MEETINGS

A. Preinstallation Conference: Conduct conference at Project site.

1.3 ACTION SUBMITTALS

A. Product Data: For each type of product.
   1. Include manufacturer's printed statement of VOC content.
   2. Include manufacturer's recommended number of coats for each type of substrate and spreading rate for each separate coat.

B. Sample Warranty: For special warranty.

1.4 QUALITY ASSURANCE

A. Mockups: Prepare mockups of each required water repellent on each type of substrate required to demonstrate aesthetic effects, and to set quality standards for materials and execution.
   1. Locate mockups on existing surfaces where directed by Architect.
      a. Size: 10 sq. ft. each.
   2. Approval of mockups does not constitute approval of deviations from the Contract Documents contained in mockups unless Architect specifically approves such deviations in writing.
   3. Subject to compliance with requirements, approved mockups may become part of the completed Work if undisturbed at time of Substantial Completion.

1.5 FIELD CONDITIONS

A. Limitations: Proceed with application only when the following existing and forecasted weather and substrate conditions permit water repellents to be applied according to manufacturers' written instructions and warranty requirements:
   1. Concrete surfaces and mortar have cured for not less than 28 days.
   2. Ambient temperature is above 40° F and below 100° F and will remain so for 24 hours.
   3. Substrate is not frozen and substrate-surface temperature is above 40° F and below 100° F.
   4. Rain or snow is not predicted within 24 hours.
   5. Not less than 24 hours have passed since surfaces were last wet.
   6. Windy conditions do not exist that might cause water repellent to be blown onto vegetation or surfaces not intended to be treated.

1.6 WARRANTY

A. Special Warranty: Manufacturer's standard form in which manufacturer and Applicator agree to repair or replace materials that fail to maintain water repellency within specified warranty period.
   1. Warranty Period: Two years from date of Substantial Completion.

PART 2 - PRODUCTS

2.1 PENETRATING WATER REPELLENTS

A. Water Repellent (non-silane, non-siloxane)
   1. R97 water repellent, manufactured by Cathedral Stone Products.

B. Requirements
   1. Must not contain or produce any VOC's.
   2. Minimum rating of 80 perms when applied to manufactures specification.
   3. Must not lower the water vapor transmission (WVT) of the substrate by more than 1/3 of its pretreated value.

C. Miscellaneous Equipment
   1. Natural bristle brushes
   2. Rollers
   3. Potable water
   4. Rubber gloves
   5. Eye and skin protection
   6. Low pressure (10-25 psi.) Sprayer

PART 3 - EXECUTION

3.1 EXAMINATION

A. Examine substrates, areas, and conditions, with Applicator present, for compliance with requirements and conditions affecting performance of the Work.
   1. Verify that surfaces are clean and dry according to water-repellent manufacturer's requirements. Check moisture content in three representative locations by method recommended by manufacturer.
   2. Inspect for previously applied treatments that may inhibit penetration or performance of water repellents.
   3. Verify that there is no efflorescence or other removable residues that would be trapped beneath the application of water repellent.
   4. Verify that required repairs are complete, cured, and dry before applying water repellent.

B. Proceed with installation only after unsatisfactory conditions have been corrected.

3.2 PREPARATION

A. New Construction and Repairs: Allow concrete and other cementitious materials to age before application of water repellent, according to repellent manufacturer's written instructions.

B. Cleaning: Before application of water repellent, clean substrate of substances that could impair penetration or performance of product according to water-repellent manufacturer's written instructions and as follows:
   1. Clay Brick Masonry: Section 04 01 20 "Maintenance of Unit Masonry."

C. Protect adjoining work, including mortar and sealant bond surfaces, from spillage or blow-over of water repellent. Cover adjoining and nearby surfaces of aluminum and glass if there is the possibility of water repellent being deposited on surfaces. Cover live vegetation.

D. Coordination with Mortar Joints: Do not apply water repellent until pointing mortar for joints adjacent to surfaces receiving water-repellent treatment has been installed and cured.

E. Coordination with Sealant Joints: Do not apply water repellent until sealants for joints adjacent to surfaces receiving water-repellent treatment have been installed and cured.
   1. Water-repellent work may precede sealant application only if sealant adhesion and compatibility have been tested and verified using substrate, water repellent, and sealant materials identical to those required.

3.3 APPLICATION

A. Apply coating of water repellent on surfaces to be treated using 15 psi- pressure spray with a fan-type spray nozzle, roller, or brush to the point of saturation. Apply coating in dual passes of uniform, overlapping strokes. Remove excess material; do not allow material to puddle beyond saturation. Comply with manufacturer's written instructions for application procedure unless otherwise indicated.

B. Apply a second saturation coating, repeating first application. Comply with manufacturer's written instructions for limitations on drying time between coats and after rainstorm wetting of surfaces between coats. Consult manufacturer's technical representative if written instructions are not applicable to Project conditions.
   1. Reapply water repellent until coverage test indicates complete coverage.

3.4 FIELD QUALITY CONTROL

A. Coverage Test: In the presence of Architect, hose down a dry, repellent-treated surface to verify complete and uniform product application. A change in surface color will indicate incomplete application.
   1. Notify Architect seven days in advance of the dates and times when surfaces will be tested.
   2. Reapply water repellent until coverage test indicates complete coverage.

3.5 CLEANING

A. Immediately clean water repellent from adjoining surfaces and surfaces soiled or damaged by water-repellent application as work progresses. Correct damage to work of other trades caused by water-repellent application, as approved by Architect.

B. Comply with manufacturer's written cleaning instructions.

END OF SECTION 07 19 00

SECTION 07 21 00 - THERMAL INSULATION

PART 1 - GENERAL

1.1 SUMMARY

A. Section Includes:
   1. Foam-plastic board insulation.
   2. Glass-fiber blanket insulation.
   3. Spray polyurethane foam insulation.
   4. Vapor retarders.

1.2 ACTION SUBMITTALS

A. Product Data: For each type of product indicated.

1.3 QUALITY ASSURANCE

A. Surface-Burning Characteristics: As determined by testing identical products according to ASTM E 84 by a qualified testing agency. Identify products with appropriate markings of applicable testing agency.

1.4 DELIVERY, STORAGE, AND HANDLING

A. Protect insulation materials from physical damage and from deterioration due to moisture, soiling, and other sources. Store inside and in a dry location. Comply with manufacturer's written instructions for handling, storing, and protecting during installation.

B. Protect foam-plastic board insulation as follows:
   1. Do not expose to sunlight except to necessary extent for period of installation and concealment.
   2. Protect against ignition at all times. Do not deliver foam-plastic board materials to Project site before installation time.
   3. Quickly complete installation and concealment of foam-plastic board insulation in each area of construction.

PART 2 - PRODUCTS

2.1 FOAM-PLASTIC BOARD INSULATION

A. Foam-Plastic Board (Rigid) Insulation: Provide one of the following board insulation systems:
   1. Extruded-Polystyrene Board Insulation: ASTM C 578, of type and minimum compressive strength indicated below, with maximum flame-spread and smoke-developed indexes of 75 and 450, respectively, per ASTM E 84.
      a. Manufacturers: Subject to compliance with requirements, provide products by one of the following:
         1) DiversiFoam Products.
         2) Dow Chemical Company (The).
         3) Owens Corning.
         4) Pactiv Building Products.
      b. Interior Furred Walls: Type X, 15 psi.
   2. Expanded-Polystyrene Board Insulation: ASTM C 578, of type and minimum compressive strength indicated below, with maximum flame-spread and smoke-developed indexes of

75 and 450, respectively, per ASTM E 84. Label each individual insulation board indicating UL certification and ASTM material type.

a. Manufacturers: Subject to compliance with requirements, provide products by one of the following:
   1) ACH Foam Technologies.
   2) DiversiFoam Products.
   3) Plymouth Foam, Inc.

b. Interior Furred Walls: Type II, 15 psi.

B. Adhesive for Bonding Insulation: Product with demonstrated capability to bond insulation securely to substrates without damaging insulation and substrates.

2.2 GLASS-FIBER BLANKET INSULATION

A. Manufacturers: Subject to compliance with requirements, provide products by one of the following:
   1. CertainTeed Corporation.
   2. Guardian Building Products, Inc.
   3. Johns Manville.
   4. Knauf Insulation.
   5. Owens Corning.

B. Unfaced, Glass-Fiber Blanket Insulation: ASTM C 665, Type I; with maximum flame-spread and smoke-developed indexes of 25 and 50, respectively, per ASTM E 84; passing ASTM E 136 for combustion characteristics.

2.3 SPRAY POLYURETHANE FOAM INSULATION

A. Open-Cell Polyurethane Foam Insulation: Spray-applied polyurethane foam using water as a blowing agent, with maximum flame-spread and smoke-developed indexes of 25 and 450, respectively, per ASTM E 84.
   1. Manufacturers: Subject to compliance with requirements, provide products by one of the following:
      a. Demilec (USA) LLC.
      b. Icynene Inc.
      c. NCFI; Division of Barnhardt Mfg. Co.
   2. Minimum density of 0.4 lb/cu. ft., thermal resistivity of 3.7° F x h x sq. ft./Btu x in. at 75° F.

2.4 VAPOR RETARDERS

A. Polyethylene Vapor Retarders: ASTM D 4397, 6 mils thick, with maximum permeance rating of 0.13 perm.

B. Vapor-Retarder Tape: Pressure-sensitive tape of type recommended by vapor-retarder manufacturer for sealing joints and penetrations in vapor retarder.

C. Vapor-Retarder Fasteners: Pancake-head, self-tapping steel drill screws; with fender washers.

D. Single-Component Nonsag Urethane Sealant: ASTM C 920, Type I, Grade NS, Class 25, Use NT related to exposure, and Use O related to vapor-barrier-related substrates.

PART 3 - EXECUTION

3.1 PREPARATION

A. Clean substrates of substances that are harmful to insulation or vapor retarders, including removing projections capable of puncturing vapor retarders, or that interfere with insulation attachment.

3.2 INSTALLATION, GENERAL

A. Comply with insulation manufacturer's written instructions applicable to products and applications indicated.

B. Install insulation that is undamaged, dry, and unsoiled and that has not been left exposed to ice, rain, or snow at any time.

C. Extend insulation to envelop entire area to be insulated. Cut and fit tightly around obstructions and fill voids with insulation. Remove projections that interfere with placement.

D. Provide sizes to fit applications indicated and selected from manufacturer's standard thicknesses, widths, and lengths. Apply single layer of insulation units to produce thickness indicated unless multiple layers are otherwise shown or required to make up total thickness.

3.3 INSTALLATION OF INSULATION FOR FRAMED CONSTRUCTION

A. Apply insulation units to substrates by method indicated, complying with manufacturer's written instructions. If no specific method is indicated, bond units to substrate with adhesive or use mechanical anchorage to provide permanent placement and support of units.

B. Glass-Fiber or Mineral-Wool Blanket Insulation: Install in cavities formed by framing members according to the following requirements:
   1. Use insulation widths and lengths that fill the cavities formed by framing members. If more than one length is required to fill the cavities, provide lengths that will produce a snug fit between ends.
   2. Place insulation in cavities formed by framing members to produce a friction fit between edges of insulation and adjoining framing members.
   3. Maintain 3-inch clearance of insulation around recessed lighting fixtures not rated for or protected from contact with insulation.

C. Spray-Applied Insulation: Apply spray-applied insulation according to manufacturer's written instructions. Do not apply insulation until installation of pipes, ducts, conduits, wiring, and electrical outlets in walls is completed and windows, electrical boxes, and other items not indicated to receive insulation are masked. After insulation is applied, make flush with face of studs by using method recommended by insulation manufacturer.

D. Miscellaneous Voids: Install insulation in miscellaneous voids and cavity spaces where required to prevent gaps in insulation using the following materials:
   1. Spray Polyurethane Insulation: Apply according to manufacturer's written instructions.

3.4 INSTALLATION OF VAPOR RETARDERS

A. Place vapor retarders on side of construction indicated on Drawings. Extend vapor retarders to extremities of areas to protect from vapor transmission. Secure vapor retarders in place with adhesives or other anchorage system as indicated. Extend vapor retarders to cover miscellaneous voids in insulated substrates, including those filled with loose-fiber insulation.

B. Seal vertical joints in vapor retarders over framing by lapping no fewer than two studs.
   1. Fasten vapor retarders to wood framing at top, end, and bottom edges; at perimeter of wall openings; and at lap joints. Space fasteners 16 inches on center.

C. Seal joints caused by pipes, conduits, electrical boxes, and similar items penetrating vapor retarders with vapor-retarder tape to create an airtight seal between penetrating objects and vapor retarders.

D. Repair tears or punctures in vapor retarders immediately before concealment by other work. Cover with vapor-retarder tape or another layer of vapor retarder.

3.5 PROTECTION

A. Protect installed insulation and vapor retarders from damage due to harmful weather exposures, physical abuse, and other causes. Provide temporary coverings or enclosures where insulation is subject to abuse and cannot be concealed and protected by permanent construction immediately after installation.

END OF SECTION 07 21 00

SECTION 07 24 19 - WATER-DRAINAGE EXTERIOR INSULATION AND FINISH SYSTEM (EIFS)

PART 1 - GENERAL

1.1 SUMMARY

A. Section Includes:
   1. EIFS-clad drainage-wall assemblies that are field applied over substrate.
   2. Water-resistive barrier coatings.

B. Related Requirements:
   1. Section 07 92 00 "Joint Sealants" for sealing joints in EIFS with elastomeric joint sealants and for perimeter joints between system and other materials.

1.2 DEFINITIONS

A. Definitions in ASTM E 2110 apply to Work of this Section.

B. EIFS: Exterior insulation and finish system(s).

C. IBC: International Building Code.

1.3 PREINSTALLATION MEETINGS

A. Preinstallation Conference: Conduct conference at Project site.

1.4 ACTION SUBMITTALS

A. Product Data: For each EIFS component, trim, and accessory, including water-resistive barrier coatings.

B. Shop Drawings: For EIFS. Include plans, elevations, sections, details of components, details of penetration and termination, flashing details, joint locations and configurations, fastening and anchorage details including mechanical fasteners, and connections and attachments to other work.

C. Samples for Verification: 24-inch- square panels for each type of finish-coat color and texture indicated, prepared using same tools and techniques intended for actual work including.
   1. Include exposed trim and accessory Samples to verify color selected.
   2. Include a typical control joint filled with sealant of color selected, as specified in Section 07 92 00 "Joint Sealants."

1.5 INFORMATIONAL SUBMITTALS

A. Qualification Data: For Installer.

B. Manufacturer Certificates: Signed by EIFS manufacturer, certifying the following:
   1. EIFS complies with requirements.
   2. Substrates to which EIFS is indicated to be attached are acceptable to EIFS manufacturer.
   3. Accessory products installed with EIFS, including joint sealants, flashing, water-resistive barrier coatings, trim, whether or not furnished by EIFS manufacturer and whether or not specified in this Section, are acceptable to EIFS manufacturer.

C. Product Test Reports: For each EIFS assembly and component, and for water-resistive barrier coatings, for tests performed by a qualified testing agency.

D. Sample Warranty: For manufacturer's special warranty.

1.6 CLOSEOUT SUBMITTALS

A. Maintenance Data: For EIFS to include in maintenance manuals.

1.7 QUALITY ASSURANCE

A. Installer Qualifications: An installer who is certified in writing by EIFS manufacturer as qualified to install manufacturer's system using trained workers.

B. Mockups: Build mockups to verify selections made under Sample submittals, to demonstrate aesthetic effects, to set quality standards for materials and execution, and to set quality standards for fabrication and installation.
   1. Build mockup of typical wall area.
   2. Approval of mockups does not constitute approval of deviations from the Contract Documents contained in mockups unless Architect specifically approves such deviations in writing.
   3. Subject to compliance with requirements, approved mockups may become part of the completed Work if undisturbed at time of Substantial Completion.

1.8 DELIVERY, STORAGE, AND HANDLING

A. Deliver materials in original, unopened packages with manufacturers' labels intact and clearly identifying products.

B. Store materials inside and under cover; keep them dry and protected from weather, direct sunlight, surface contamination, aging, corrosion, damaging temperatures, construction traffic, and other causes.
   1. Stack insulation board flat and off the ground.
   2. Protect plastic insulation against ignition at all times. Do not deliver plastic insulating materials to Project site before installation time.
   3. Complete installation and concealment of plastic materials as rapidly as possible in each area of construction.

1.9 FIELD CONDITIONS

A. Weather Limitations: Proceed with installation only when existing and forecasted weather conditions and ambient outdoor air, humidity, and substrate temperatures permit EIFS to be applied, dried, and cured according to manufacturers' written instructions and warranty requirements.
   1. Proceed with installation of adhesives or coatings only when ambient temperatures have remained, or are forecast to remain, above 40 deg F (4.4 deg C) for a minimum of 24 hours before, during, and after application. Do not apply EIFS adhesives or coatings during rainfall.

1.10 WARRANTY

A. Manufacturer's Special Warranty: Manufacturer agrees to repair or replace components of EIFS-clad drainage-wall assemblies that fail in materials or workmanship within specified warranty period.
   1. Failures include, but are not limited to, the following:

a. Bond integrity and weathertightness.
b. Deterioration of EIFS finishes and other EIFS materials beyond normal weathering.

2. Warranty coverage includes the following components of EIFS-clad drainage-wall assemblies:
   a. EIFS finish, including base coats, finish coats, and reinforcing mesh.
   b. Insulation installed as part of EIFS.
   c. Insulation adhesive.
   d. EIFS accessories, including trim components and flashing.
   e. Water-resistive coatings.
   f. EIFS drainage components.
3. Warranty Period: 10 years from date of Substantial Completion.

PART 2 - PRODUCTS

2.1 MANUFACTURERS

A. Manufacturers: Subject to compliance with requirements, provide products by one of the following:
   1. BASF; Senergy.
   2. Dryvit Systems, Inc.
   3. Parex USA, Inc.
   4. Sto Corp.

B. Source Limitations: Obtain EIFS from single source from single EIFS manufacturer and from sources approved by EIFS manufacturer as compatible with EIFS components.

2.2 PERFORMANCE REQUIREMENTS

A. EIFS Performance: Comply with ASTM E 2568 and with the following:
   1. Weathertightness: Resistant to uncontrolled water penetration from exterior, with a means to drain water entering EIFS to the exterior.
   2. Structural Performance of Assembly and Components:
      a. Wind Loads: Uniform pressure as indicated on Drawings.
   3. Impact Performance: ASTM E 2568, High impact resistance**.**
   4. Bond Integrity: Free from bond failure within EIFS components or between EIFS and substrates, resulting from exposure to fire, wind loads, weather, or other in-service conditions.
   5. Abrasion Resistance of Finish Coat: Sample consisting of 1-inch- thick EIFS mounted on 1/2-inch- thick gypsum board; cured for a minimum of 28 days and shows no cracking, checking, or loss of film integrity after exposure to 528 quarts of sand when tested according to ASTM D 968, Method A.
   6. Mildew Resistance of Finish Coat: Sample applied to 2-by-2-inch clean glass substrate; cured for 28 days and shows no growth when tested according to ASTM D 3273 and evaluated according to ASTM D 3274.
   7. Drainage Efficiency: 90 percent average minimum when tested according to ASTM E 2273.

2.3 EIFS MATERIALS

A. Primer/Sealer: EIFS manufacturer's standard substrate conditioner designed to protect substrates from moisture penetration and to improve the bond between substrate and insulation adhesive.

B. Water-Resistive Barrier Coating: EIFS manufacturer's standard formulation and accessories for use as water-resistive barrier coating; compatible with substrate.

1. Water-Resistance: Comply with physical and performance criteria of ASTM E 2570/E 2570M.

C. Flexible-Membrane Flashing: Cold-applied, self-adhering, self-healing, rubberized-asphalt and polyethylene-film composite sheet or tape and primer; EIFS manufacturer's standard or product recommended in writing by EIFS manufacturer.

D. Insulation Adhesive: EIFS manufacturer's standard formulation designed for indicated use; specifically formulated to be applied to back side of insulation in a manner that creates open vertical channels designed to serve as an integral part of the water-drainage system of the EIFS-clad drainage-wall assembly; compatible with substrate.

E. Molded, (Expanded) Rigid Cellular Polystyrene Board Insulation: Comply with ASTM E 2430/E 2430M, unless otherwise noted, and the following:
1. Flame-Spread and Smoke-Developed Indexes: 25 and 450 or less, respectively, according to ASTM E 84.
2. Dimensions: Provide insulation boards of not more than 24 by 48 inches, with thickness indicated on Drawings.
3. Foam Buildouts: Provide with profiles and dimensions indicated on Drawings.

F. Reinforcing Mesh: Balanced, alkali-resistant, open-weave, glass-fiber mesh treated for compatibility with other EIFS materials, made from continuous multiend strands with retained mesh tensile strength of not less than 120 lbf/in. according to ASTM E 2098 and the following:
1. Reinforcing Mesh for EIFS, General: Not less than weight required to comply with impact-performance level specified in "Performance Requirements" Article.

G. Base-Coat Materials: EIFS manufacturer's standard mixture complying with the following:
1. Factory-blended dry formulation of portland cement, dry polymer admixture, and inert fillers to which only water is added at Project site.

H. Primer: EIFS manufacturer's standard factory-mixed, elastomeric-polymer primer for preparing base-coat surface for application of finish coat.

I. Finish-Coat Materials: EIFS manufacturer's standard acrylic-based coating complying with the following:
1. Factory-mixed formulation of polymer-emulsion binder, colorfast mineral pigments, sound stone particles, and fillers.
2. Color: basis of design: Dryvit #381 “Monastery Brown”
3. Texture: basis of design: Dryvit “Sandblast”

J. Water: Potable.

K. Trim Accessories: Type as designated or required to suit conditions indicated and to comply with EIFS manufacturer's written instructions; manufactured from UV-stabilized PVC; and complying with ASTM D 1784, manufacturer's standard cell class for use intended, and ASTM C 1063.
1. Weep Screed/Track: Prefabricated, one-piece type for attachment behind insulation with weep holes, of depth required to suit thickness of coating and insulation, with face leg perforated for bonding to coating and back leg; designed to drain incidental moisture that gets into wall construction to the exterior at terminations of EIFS with drainage.

2.4 MIXING

A. Comply with EIFS manufacturer's requirements for combining and mixing materials. Do not introduce admixtures, water, or other materials except as recommended by EIFS manufacturer.

Mix materials in clean containers. Use materials within time period specified by EIFS manufacturer or discard.

PART 3 - EXECUTION

3.1 EXAMINATION

A. Examine substrates, areas, and conditions, with Installer present, for compliance with requirements for installation tolerances and other conditions affecting performance of the Work.

B. Examine roof edges, wall framing, flashings, openings, substrates, and junctures at other construction for suitable conditions where EIFS will be installed.

C. Proceed with installation only after unsatisfactory conditions have been corrected.
   1. Begin coating application only after surfaces are dry.
   2. Application of coating indicates acceptance of surfaces and conditions.

3.2 PREPARATION

A. Protect contiguous work from moisture deterioration and soiling caused by application of EIFS. Provide temporary covering and other protection needed to prevent spattering of exterior finish coats on other work.

B. Protect EIFS, substrates, and wall construction behind them from inclement weather during installation. Prevent penetration of moisture behind drainage plane of EIFS and deterioration of substrates.

C. Prepare and clean substrates to comply with EIFS manufacturer's written instructions to obtain optimum bond between substrate and water-resistive coating.
   1. Masonry and Concrete Substrates: Verify suitability of substrate by performing bond and moisture tests recommended by EIFS manufacturer.

3.3 EIFS INSTALLATION, GENERAL

A. Comply with ASTM C 1397, ASTM E 2511, and EIFS manufacturer's written instructions for installation of EIFS as applicable to each type of substrate indicated.

3.4 SUBSTRATE PROTECTION APPLICATION

A. Prime Coat: Apply primer over substrates where required by EIFS manufacturer at required rate and allow it to dry. Limit priming to areas that will be covered by weather-resistive barrier on same day. Reprime areas exposed for more than 24 hours

B. Water-Resistive Coating: Apply over entire substrate to provide a water-resistive barrier.
   1. Tape and seal joints, exposed edges, terminations, and inside and outside corners of sheathing unless otherwise indicated by EIFS manufacturer's written instructions.

C. Flexible-Membrane Flashing: Install over weather-resistive barrier, applied and lapped to shed water; seal at openings, penetrations, terminations, and where required by EIFS manufacturer. Prime substrates if required and install flashing to comply with EIFS manufacturer's written instructions and details.

3.5 TRIM INSTALLATION

A. Trim: Coordinate with installation of insulation.

1. Weep Screed/Track: Use at bottom termination edges and at floor line expansion joints of water-drainage EIFS unless otherwise indicated.

3.6 INSULATION INSTALLATION

A. Board Insulation: Adhesively attach insulation to substrate in compliance with ASTM C 1397 and the following:
   1. Apply adhesive to insulation by notched-trowel method, with notches oriented vertically to produce drainage channels that remain functional after the insulation is adhered to substrate.
   2. Press and slide insulation into place. Apply pressure over the entire surface of insulation to accomplish uniform contact, high initial grab, and overall level surface.
   3. Allow adhered insulation to remain undisturbed for not less than 24 hours, before beginning rasping and sanding insulation or applying base coat and reinforcing mesh.
   4. Apply insulation over substrates in courses with long edges of boards oriented horizontally.
   5. Begin first course of insulation from screed/track and work upward. Work from perimeter toward interior of panels if possible.
   6. Stagger vertical joints of insulation boards in successive courses to produce running bond pattern. Locate joints so no piece of insulation is less than 12 inches wide or 6 inches high. Offset joints not less than 6 inches from corners of window and door openings and not less than 4 inches from aesthetic reveals.
      a. Adhesive Attachment: Offset joints of insulation not less than 6 inches from horizontal and 4 inches from vertical joints in sheathing.
   7. Interlock ends at internal and external corners.
   8. Abut insulation tightly at joints within and between each course to produce flush, continuously even surfaces without gaps or raised edges between boards. If gaps greater than 1/16 inch occur, fill with insulation cut to fit gaps exactly; insert insulation without using adhesive or other material.
   9. Cut insulation to fit openings, corners, and projections precisely and to produce edges and shapes complying with details indicated.
   10. Rasp or sand flush entire surface of insulation to remove irregularities projecting more than 1/32 inch from surface of insulation and to remove yellowed areas due to sun exposure; do not create depressions deeper than 1/16 inch. Prevent airborne dispersal and immediately collect insulation raspings or sandings.
   11. Cut aesthetic reveals in outside face of insulation with high-speed router and bit configured to produce grooves, rabbets, and other features that comply with profiles and locations indicated. Do not reduce insulation thickness at aesthetic reveals to less than 3/4 inch.
   12. Interrupt insulation for expansion joints where indicated.
   13. Form joints for sealant application by leaving gaps between adjoining insulation edges and between insulation edges and dissimilar adjoining surfaces. Make gaps wide enough to produce joint widths indicated after encapsulating joint substrates with base coat and reinforcing mesh.
   14. After installing insulation and before applying field-applied reinforcing mesh, fully wrap board edges. Cover edges of board and extend encapsulating mesh not less than 2-1/2 inches over front and back face unless otherwise indicated on Drawings.
   15. Treat exposed edges of insulation as follows:
      a. Except for edges forming substrates of sealant joints, encapsulate with base coat, reinforcing mesh, and finish coat.
      b. Encapsulate edges forming substrates of sealant joints within EIFS or between EIFS and other work with base coat and reinforcing mesh.
   16. Coordinate installation of flashing and insulation to produce wall assembly that does not allow water to penetrate behind flashing and water-resistive barrier.

B. Expansion Joints: Install at locations indicated, where required by EIFS manufacturer, and as follows:

1. At expansion joints in substrates behind EIFS.
2. Where EIFS adjoin dissimilar substrates, materials, and construction, including other EIFS.
3. [**At floor lines in multilevel wood-framed construction.**]
4. Where wall height or building shape changes.
5. Where EIFS manufacturer requires joints in long continuous elevations.

3.7 BASE-COAT INSTALLATION

A. Base Coat: Apply to exposed surfaces of insulation in minimum thickness recommended in writing by EIFS manufacturer, but not less than 1/16-inch dry-coat thickness.

B. Reinforcing Mesh: Embed reinforcing mesh in wet base coat to produce wrinkle-free installation with mesh continuous at corners, overlapped not less than 2-1/2 inches or otherwise treated at joints to comply with ASTM C 1397 and EIFS manufacturer's written instructions. Do not lap reinforcing mesh within 8 inches of corners. Completely embed mesh, applying additional base-coat material if necessary, so reinforcing-mesh color and pattern are invisible.

C. Additional Reinforcing Mesh: Apply strip reinforcing mesh around openings, extending 4 inches beyond perimeter. Apply additional 9-by-12-inch strip reinforcing mesh diagonally at corners of openings (re-entrant corners). Apply 8-inch- wide, strip reinforcing mesh at both inside and outside corners unless base layer of mesh is lapped not less than 4 inches on each side of corners.
   1. At aesthetic reveals, apply strip reinforcing mesh not less than 8 inches wide.
   2. Embed strip reinforcing mesh in base coat before applying first layer of reinforcing mesh.

D. Double Base-Coat Application: Where indicated, apply second base coat in same manner and thickness as first application, except without reinforcing mesh. Do not apply until first base coat has cured.

3.8 FINISH-COAT INSTALLATION

A. Primer: Apply over dry base coat according to EIFS manufacturer's written instructions.

B. Finish Coat: Apply over dry primed base coat, maintaining a wet edge at all times for uniform appearance, in thickness required by EIFS manufacturer to produce a uniform finish of color and texture matching approved sample and free of cold joints, shadow lines, and texture variations.
   1. Embed aggregate in finish coat according to EIFS manufacturer's written instructions to produce a uniform applied-aggregate finish of color and texture matching approved sample.

3.9 CLEANING AND PROTECTION

A. Remove temporary covering and protection of other work. Promptly remove coating materials from window and door frames and other surfaces outside areas indicated to receive EIFS coatings.

END OF SECTION 07 24 19

SECTION 07 25 00 - WEATHER BARRIERS

PART 1 - GENERAL

1.1 SUMMARY

A. Section Includes building wrap and flashings.

1.2 ACTION SUBMITTALS

A. Product Data: For each type of product.

PART 2 - PRODUCTS

2.1 WEATHER BARRIERS

A. Building Wrap: ASTM E 1677, Type I air barrier; with flame-spread and smoke-developed indexes of less than 25 and 450, respectively, when tested according to ASTM E 84; UV stabilized; and acceptable to authorities having jurisdiction.
   1. Products: Subject to compliance with requirements, provide the following:
      a. DuPont (E. I. du Pont de Nemours and Company); Tyvek CommercialWrap D.
   2. Water Vapor Transmission: 30 perms, when tested in accordance with ASTM E 96, Method B.
   3. Water Penetration Resistance: 235 cm when tested in accordance with AATCC Test Method 127.
   4. Basis Weight: 2.4 oz/yd^2, when tested in accordance with TAPPI Test Method T-410.
   5. Air Infiltration Resistance: Air infiltration at >750 seconds, when tested in accordance with TAPPI Test Method T-460.
   6. Tensile Strength: 33/41 lbs/in., when tested in accordance with ASTM D 822, Method A.
   7. Surface Burning Characteristics: Class A, when tested in accordance with ASTM E 84. Flame Spread: 15, Smoke Developed: 25.

B. Building-Wrap Tape: Pressure-sensitive plastic tape recommended by building-wrap manufacturer for sealing joints in building wrap.

C. Flexible Flashing: Self-adhering, recommended by building-wrap manufacturer for sealing transitions, penetrations, and openings; including preformed inside or outside corners and end dams.

D. Adhesives: Provide adhesive recommended by building-wrap manufacturer.

E. Fasteners: Rust-resistant plastic cap fasteners, recommended by building-wrap manufacturer for substrate indicated.

F. Termination Sealant: ASTM C 920, Type S, Grade NS, Class 25; moisture cure, medium modulus polymer modified sealing compound.

G. Weather Resistive Barrier: Self-adhering, vapor permeable air barrier.
   1. Carlisle Coatings & Waterproofing; CCW-705VP.
   2. Cosella-Dorken Products Inc.; Delta Vent SA.
   3. Henry Company; BlueskinVP 160.
   4. Grace Construction Products; Perm-A-Barrier VPS.

H. Sill, Transition, and Wall Flashing: Weather barrier manufacturer's SBS modified bitumen, self-adhering sheet membrane which is integrally laminated to cross laminated polyethylene film.
   1. Membrane Thickness: Not less than 36 mils.
   2. Film Thickness: 4.0 mils

I. Primer: Liquid primer recommended for substrate by weather barrier material manufacturer.

J. Joint Sealant: Moisture cure, medium modulus polymer modified sealing compound having the following physical properties:
   1. Compatible with weather barrier, and roofing, waterproofing, or air/vapor barrier membranes and substrate to which contact is made.
   2. Complies with Fed. Spec. TT-S-00230C, Type II, Class A
   3. Complies with ASTM C 920, Type S, Grade NS, Class 25
   4. Elongation: 450 – 550%
   5. Remains flexible with aging
   6. Seals construction joints up to 1 inch wide
   7. Auxiliary tested component of ASTM E2357 for Air Leakage of Air Barrier Assemblies

PART 3 - EXECUTION

3.1 WEATHER RESISTIVE BARRIER INSTALLATION: BUILDING WRAP

A. Building Wrap: Comply with manufacturer's written instructions.
   1. Seal seams, cuts, tears, and edges with tape.
   2. Extend flexible flashing into openings and at penetrations and transitions.
   3. Apply sealant along exposed flexible flashing edges.

3.2 WEATHER RESISTIVE BARRIER INSTALLATION: SELF ADHERING VAPOR PERMEABLE

A. Apply primer to substrates at required rate and allow it to dry. Limit priming to areas that will be covered by weather resistive barrier on same day. Reprime areas exposed for more than 24 hours.

B. Inside and Outside Corners:
   1. Seal inside and outside corners of sheathing with a strip of self-adhering vapor permeable membrane extending a minimum of 3 inches on either side of the corner detail.
   2. For inside corners, pre-treat the corner with a continuous 1/2-inch bead of termination sealant.
   3. Prime surfaces in an intermittent pattern, at a rate of 200-250 sq ft/gal where appropriate to achieve surface adhesion as per manufacturers' instructions and allow to dry.
   4. Align and position self-adhering transition membrane, remove protective film and press firmly into place. Ensure minimum 2 inches overlap at all side laps and minimum 3 inches overlap at all end laps of membrane.
   5. Roll all laps and membrane with a countertop roller to ensure seal.

C. Transition Areas:
   1. Tie-in to structural beams, columns, floor slabs and intermittent floors, parapet curbs, foundation walls, roofing systems and at the interface of dissimilar materials as indicated on Drawings.
   2. Prime surfaces in an intermittent pattern, at a rate of 200-250 sq. ft/gal where appropriate to achieve surface adhesion as per manufacturers' instructions and allow to dry.
   3. Align and position self-adhering transition membrane, remove protective film and press firmly into place. Provide minimum 3-inch lap to all substrates.
   4. Lap weather barrier over flashing at heads of openings, unless otherwise indicated.

5. Ensure minimum 2 inches overlap at all side laps and minimum 3 inches overlap at all end laps of membrane.
6. Roll all laps and membrane with a countertop roller to ensure seal.

D. Rough Openings:
1. Prime surfaces in an intermittent pattern, at a rate of 200-250 sq. ft/gal where appropriate to achieve surface adhesion as per manufacturers' instructions and allow to dry.
2. Place specified SBS modified self-adhering flashing membrane across sills. Pre-treat inside corners with a bead of termination sealant. Install sill pan membrane and end dam terminations, seal cuts and terminations with termination sealant.
3. Wrap jamb of rough openings with self-adhering transition membrane overlapping sill flashings.
4. Align and position self-adhering transition membrane, remove protective film and press firmly into place. Ensure minimum 2 inches overlap at all side laps and minimum 3 inches overlap at all end laps of membrane.
5. Roll all laps and membrane with a countertop roller to ensure seal.

E. Primary Water Resistive Air Barrier:
1. Apply self-adhering water resistive air barrier membrane complete and continuous to substrate in a sequential overlapping weatherboard method starting at bottom or base of wall and working up in accordance with manufacturer's recommendations and written instructions. Stagger all vertical joints.
   a. Cut to manageable sections, align and position self-adhering membrane to substrate, remove top panel of protective release film and press firmly into place.
   b. Ensure alignment, hold membrane in place to avoid wrinkles and sequentially remove remaining panels of protective film and press firmly into place.
   c. Ensure minimum 3-inch overlap at all ends and 2-inch side laps of subsequent membrane applications.
   d. Pressure roll all membrane surfaces, laps and flashings with a countertop roller or 'J-roller' to ensure appropriate surface adhesion.
   e. Seal around all penetrations through weather barrier with termination mastic/sealant, membrane counter-flashing or other procedures according to manufacturer's instructions, ensuring chemical compatibility among adjoining materials.
   f. At the end of each day's work seal the top edge of the membrane where it meets the substrate with termination sealant. Trowel apply a feathered edge to seal termination and shed water.

F. Application of Termination Sealant:
1. Seal membrane terminations, heads of mechanical fasteners, masonry tie fasteners, around penetrations, duct work, electrical and other apparatus extending through the primary water resistive air barrier membrane and around the perimeter edge of membrane terminations at window and door frames with specified termination sealant.
2. Seal the leading edge of membrane terminations and reverse laps.

3.3 CLEANING AND PROTECTION

A. Protect weather barrier system from damage during application and remainder of construction period, according to manufacturer's written instructions.
1. Protect weather barrier from exposure to UV light and harmful weather exposure as required by manufacturer. If exposed to these conditions for more than time period allowed by manufacturer, remove and replace weather barrier or if approved by manufacturer in writing, install additional full-thickness weather barrier application after repairing and preparing the overexposed membrane according to weather barrier manufacturer's written instructions.

2. Protect weather barrier from contact with incompatible materials and sealants not approved by weather barrier manufacturer.

B. Clean spills, stains, and soiling from construction that would be exposed in the completed Work, using cleaning agents and procedures recommended by manufacturer of affected construction.

C. Remove masking materials after installation.

END OF SECTION 07 25 00

SECTION 07 42 13 - FORMED METAL WALL PANELS

PART 1 - GENERAL

1.1 SUMMARY

A. Section Includes:
   1. Concealed-fastener, lap-seam metal wall panels.

1.2 PREINSTALLATION MEETINGS

A. Preinstallation Conference: Conduct conference at Project site.
   1. Meet with Owner, Architect, Owner's insurer if applicable, metal panel Installer, metal panel manufacturer's representative, structural-support Installer, and installers whose work interfaces with or affects metal panels, including installers of doors, windows, and louvers.
   2. Review and finalize construction schedule and verify availability of materials, Installer's personnel, equipment, and facilities needed to make progress and avoid delays.
   3. Review methods and procedures related to metal panel installation, including manufacturer's written instructions.
   4. Examine support conditions for compliance with requirements, including alignment between and attachment to structural members.
   5. Review flashings, special siding details, wall penetrations, openings, and condition of other construction that affect metal panels.
   6. Review governing regulations and requirements for insurance, certificates, and tests and inspections if applicable.
   7. Review temporary protection requirements for metal panel assembly during and after installation.
   8. Review of procedures for repair of metal panels damaged after installation.
   9. Document proceedings, including corrective measures and actions required, and furnish copy of record to each participant.

1.3 ACTION SUBMITTALS

A. Product Data: For each type of product.
   1. Include construction details, material descriptions, dimensions of individual components and profiles, and finishes for each type of panel and accessory.

B. Shop Drawings:
   1. Include fabrication and installation layouts of metal panels; details of edge conditions, joints, panel profiles, corners, anchorages, attachment system, trim, flashings, closures, and accessories; and special details.
   2. Accessories: Include details of the flashing, trim, and anchorage systems, at a scale of not less than 1-1/2 inches per 12 inches.

C. Samples for Initial Selection: For each type of metal panel indicated with factory-applied finishes.
   1. Include Samples of trim and accessories involving color selection.

D. Samples for Verification: For each type of exposed finish, prepared on Samples of size indicated below:
   1. Metal Panels: 12 inches long by actual panel width. Include fasteners, closures, and other metal panel accessories.

1.4 INFORMATIONAL SUBMITTALS

A. Sample Warranties: For special warranties.

1.5 CLOSEOUT SUBMITTALS

A. Maintenance Data: For metal panels to include in maintenance manuals.

1.6 QUALITY ASSURANCE

A. Installer Qualifications: An entity that employs installers and supervisors who are trained and approved by manufacturer.

1.7 DELIVERY, STORAGE, AND HANDLING

A. Deliver components, metal panels, and other manufactured items so as not to be damaged or deformed. Package metal panels for protection during transportation and handling.

B. Unload, store, and erect metal panels in a manner to prevent bending, warping, twisting, and surface damage.

C. Stack metal panels horizontally on platforms or pallets, covered with suitable weathertight and ventilated covering. Store metal panels to ensure dryness, with positive slope for drainage of water. Do not store metal panels in contact with other materials that might cause staining, denting, or other surface damage.

D. Retain strippable protective covering on metal panels during installation.

1.8 FIELD CONDITIONS

A. Weather Limitations: Proceed with installation only when existing and forecasted weather conditions permit assembly of metal panels to be performed according to manufacturers' written instructions and warranty requirements.

1.9 COORDINATION

A. Coordinate metal panel installation with rain drainage work, flashing, trim, construction of soffits, and other adjoining work to provide a leakproof, secure, and noncorrosive installation.

1.10 WARRANTY

A. Special Warranty: Manufacturer's standard form in which manufacturer agrees to repair or replace components of metal panel systems that fail in materials or workmanship within specified warranty period.
   1. Failures include, but are not limited to, the following:
      a. Structural failures including rupturing, cracking, or puncturing.
      b. Deterioration of metals and other materials beyond normal weathering.
   2. Warranty Period: Two years from date of Substantial Completion.

B. Special Warranty on Panel Finishes: Manufacturer's standard form in which manufacturer agrees to repair finish or replace metal panels that show evidence of deterioration of factory-applied finishes within specified warranty period.
   1. Exposed Panel Finish: Deterioration includes, but is not limited to, the following:
      a. Color fading more than 5 Delta E units when tested according to ASTM D2244.
      b. Chalking in excess of a No. 8 rating when tested according to ASTM D4214.

c. Cracking, checking, peeling, or failure of paint to adhere to bare metal.

2. Finish Warranty Period: 20 years from date of Substantial Completion.

PART 2 - PRODUCTS

2.1 PERFORMANCE REQUIREMENTS

A. Structural Performance: Provide metal panel systems capable of withstanding the effects of the following loads, based on testing according to ASTM E1592:

1. Wind Loads: As indicated on Drawings.

B. Thermal Movements: Allow for thermal movements from ambient and surface temperature changes by preventing buckling, opening of joints, overstressing of components, failure of joint sealants, failure of connections, and other detrimental effects. Base calculations on surface temperatures of materials due to both solar heat gain and nighttime-sky heat loss.

1. Temperature Change (Range): 120 deg F, ambient; 180 deg F, material surfaces.

2.2 CONCEALED-FASTENER, LAP-SEAM METAL WALL PANELS

A. Provide factory-formed metal panels designed to be field assembled by lapping and interconnecting side edges of adjacent panels and mechanically attaching through panel to supports using concealed fasteners in side laps. Include accessories required for weathertight installation.

B. Manufacturers: Subject to compliance with requirements, provide products by one of the following:

1. ATAS International, Inc.
2. CENTRIA Architectural Systems.
3. MBCI.
4. Morin - A Kingspan Group Company.

C. Concealed-Fastener Metal Wall Panel – FMWP: vertical orientation.

1. Basis of Design Product: MBCI, FW-120-2 Panel.
2. Metallic-Coated Steel Sheet: Zinc-coated (galvanized) steel sheet complying with ASTM A653/A653M, G90 coating designation, or aluminum-zinc alloy-coated steel sheet complying with ASTM A792/A792M, Class AZ50 coating designation; structural quality. Prepainted by the coil-coating process to comply with ASTM A755/A755M.
   a. Nominal Thickness: 0.040 inch (20 gage).
   b. Exterior Finish: Two-coat fluoropolymer.
   c. Color: As selected by Architect from manufacturer's full range.
3. Panel Coverage: 12 inches.
4. Panel Height: 1.5 inches, nominal.

D. Mitered Corners: Structurally-bonded horizontal interior and exterior trimless corners matching metal wall panel material, profile, and factory-applied finish, fabricated and finished by metal wall panel manufacturer.

1. Welded, riveted, fastened, or field- fabricated corners do not meet the requirements of this specification.

2.3 MISCELLANEOUS MATERIALS

A. Miscellaneous Metal Subframing and Furring: ASTM C645, cold-formed, metallic-coated steel sheet, ASTM A653/A653M, G90 coating designation or ASTM A792/A792M, Class AZ50 aluminum-zinc-alloy coating designation unless otherwise indicated. Provide manufacturer's standard sections as required for support and alignment of metal panel system.

B. Panel Accessories: Provide components required for a complete, weathertight panel system including trim, copings, fasciae, mullions, sills, corner units, clips, flashings, sealants, gaskets, fillers, closure strips, and similar items. Match material and finish of metal panels unless otherwise indicated.
   1. Concealed Clips: Galvanized steel, not less than 0.06 inch (16 gage) nominal thickness, designed to allow unimpeded thermal movement of panel and configured to hold panel minimum 1/2 inch from substrate
   2. Closures: Provide closures at eaves and rakes, fabricated of same metal as metal panels.
   3. Backing Plates: Provide metal backing plates at panel end splices, fabricated from material recommended by manufacturer.
   4. Closure Strips: Closed-cell, expanded, cellular, rubber or crosslinked, polyolefin-foam or closed-cell laminated polyethylene; minimum 1-inch- thick, flexible closure strips; cut or premolded to match metal panel profile. Provide closure strips where indicated or necessary to ensure weathertight construction.

C. Flashing and Trim: Provide flashing and trim formed from same material as metal panels as required to seal against weather and to provide finished appearance. Locations include, but are not limited to, bases, drips, sills, jambs, corners, endwalls, framed openings, rakes, fasciae, parapet caps, soffits, reveals, and fillers. Finish flashing and trim with same finish system as adjacent metal panels.

D. Panel Fasteners: Self-tapping screws designed to withstand design loads. Provide exposed fasteners with heads matching color of metal panels by means of plastic caps or factory-applied coating. Provide EPDM or PVC sealing washers for exposed fasteners.

E. Panel Sealants: Provide sealant type recommended by manufacturer that are compatible with panel materials, are nonstaining, and do not damage panel finish.
   1. Sealant Tape: Pressure-sensitive, 100 percent solids, gray polyisobutylene compound sealant tape with release-paper backing. Provide permanently elastic, nonsag, nontoxic, nonstaining tape 1/2-inch-wide and 1/8 inch thick.
   2. Joint Sealant: ASTM C920; elastomeric polyurethane or silicone sealant; of type, grade, class, and use classifications required to seal joints in metal panels and remain weathertight; and as recommended in writing by metal panel manufacturer.
   3. Butyl-Rubber-Based, Solvent-Release Sealant: ASTM C1311.

2.4 FABRICATION

A. Fabricate and finish metal panels and accessories at the factory, by manufacturer's standard procedures and processes, as necessary to fulfill indicated performance requirements demonstrated by laboratory testing. Comply with indicated profiles and with dimensional and structural requirements.

B. Provide panel profile, including major ribs and intermediate stiffening ribs, if any, for full length of panel.

C. Sheet Metal Flashing and Trim: Fabricate flashing and trim to comply with manufacturer's recommendations and recommendations in SMACNA's "Architectural Sheet Metal Manual" that apply to design, dimensions, metal, and other characteristics of item indicated.
   1. Form exposed sheet metal accessories that are without excessive oil canning, buckling, and tool marks and that are true to line and levels indicated, with exposed edges folded back to form hems.
   2. Seams for Aluminum: Fabricate nonmoving seams with flat-lock seams. Form seams and seal with epoxy seam sealer. Rivet joints for additional strength.
   3. Seams for Other Than Aluminum: Fabricate nonmoving seams in accessories with flat-lock seams. Tin edges to be seamed, form seams, and solder.

4. Sealed Joints: Form nonexpansion, but movable, joints in metal to accommodate sealant and to comply with SMACNA standards.
5. Conceal fasteners and expansion provisions where possible. Exposed fasteners are not allowed on faces of accessories exposed to view.
6. Fabricate cleats and attachment devices from same material as accessory being anchored or from compatible, noncorrosive metal recommended in writing by metal panel manufacturer.
    a. Size: As recommended by SMACNA's "Architectural Sheet Metal Manual" or metal wall panel manufacturer for application but not less than thickness of metal being secured.

2.5 FINISHES

A. Protect mechanical and painted finishes on exposed surfaces from damage by applying a strippable, temporary protective covering before shipping.

B. Appearance of Finished Work: Variations in appearance of abutting or adjacent pieces are acceptable if they are within one-half of the range of approved Samples. Noticeable variations in same piece are not acceptable. Variations in appearance of other components are acceptable if they are within the range of approved Samples and are assembled or installed to minimize contrast.

C. Steel Panels and Accessories:
1. Two-Coat Fluoropolymer: AAMA 621. Fluoropolymer finish containing not less than 70 percent polyvinylidene fluoride (PVDF) resin by weight in color coat. Prepare, pretreat, and apply coating to exposed metal surfaces to comply with coating and resin manufacturers' written instructions.
2. Concealed Finish: Apply pretreatment and manufacturer's standard white or light-colored acrylic or polyester backer finish consisting of prime coat and wash coat with a minimum total dry film thickness of 0.5 mil.

PART 3 - EXECUTION

3.1 EXAMINATION

A. Examine substrates, areas, and conditions, with Installer present, for compliance with requirements for installation tolerances, metal panel supports, and other conditions affecting performance of the Work.
1. Examine wall sheathing to verify that sheathing joints are supported by framing or blocking and that installation is within flatness tolerances required by metal wall panel manufacturer.
    a. Verify that air- or water-resistive barriers have been installed over sheathing or backing substrate to prevent air infiltration or water penetration.

B. Examine roughing-in for components and systems penetrating metal panels to verify actual locations of penetrations relative to seam locations of metal panels before installation.

C. Proceed with installation only after unsatisfactory conditions have been corrected.

3.2 PREPARATION

A. Miscellaneous Supports: Install subframing, furring, and other miscellaneous panel support members and anchorages according to ASTM C754 and metal panel manufacturer's written recommendations.

3.3 INSTALLATION

A. Install metal panels according to manufacturer's written instructions in orientation, sizes, and locations indicated. Install panels perpendicular to supports unless otherwise indicated. Anchor metal panels and other components of the Work securely in place, with provisions for thermal and structural movement.
   1. Shim or otherwise plumb substrates receiving metal panels.
   2. Flash and seal metal panels at perimeter of all openings. Fasten with self-tapping screws. Do not begin installation until air- or water-resistive barriers and flashings that will be concealed by metal panels are installed.
   3. Install screw fasteners in predrilled holes.
   4. Locate and space fastenings in uniform vertical and horizontal alignment.
   5. Install flashing and trim as metal panel work proceeds.
   6. Locate panel splices over, but not attached to, structural supports. Stagger panel splices and end laps to avoid a four-panel lap splice condition.
   7. Fasten flashings and trim around openings and similar elements with self-tapping screws.
   8. Provide weathertight escutcheons for pipe- and conduit-penetrating panels.

B. Fasteners:
   1. Steel Panels: Use stainless steel fasteners.

C. Metal Protection: Where dissimilar metals contact each other or corrosive substrates, protect against galvanic action as recommended in writing by metal panel manufacturer.

D. Lap-Seam Metal Panels: Fasten metal panels to supports with fasteners at each lapped joint at location and spacing recommended by manufacturer.
   1. Install screw fasteners with power tools having controlled torque adjusted to compress washer tightly without damage to washer, screw threads, or panels. Install screws in predrilled holes.
   2. Flash and seal panels with weather closures at perimeter of all openings.

E. Accessory Installation: Install accessories with positive anchorage to building and weathertight mounting and provide for thermal expansion. Coordinate installation with flashings and other components.
   1. Install components required for a complete metal panel system including trim, copings, corners, seam covers, flashings, sealants, gaskets, fillers, closure strips, and similar items. Provide types indicated by metal wall panel manufacturer; or, if not indicated, provide types recommended by metal panel manufacturer.

F. Flashing and Trim: Comply with performance requirements, manufacturer's written installation instructions, and SMACNA's "Architectural Sheet Metal Manual." Provide concealed fasteners where possible and set units true to line and level as indicated. Install work with laps, joints, and seams that are permanently watertight.
   1. Install exposed flashing and trim that is without buckling and tool marks, and that is true to line and levels indicated, with exposed edges folded back to form hems. Install sheet metal flashing and trim to fit substrates and achieve waterproof performance.
   2. Expansion Provisions: Provide for thermal expansion of exposed flashing and trim. Space movement joints at a maximum of 10 feet with no joints allowed within 24 inches of corner or intersection. Where lapped expansion provisions cannot be used or would not be sufficiently waterproof, form expansion joints of intermeshing hooked flanges, not less than 1 inch deep, filled with mastic sealant (concealed within joints).

3.4 CLEANING AND PROTECTION

A. Remove temporary protective coverings and strippable films, if any, as metal panels are installed, unless otherwise indicated in manufacturer's written installation instructions. On completion of metal panel installation, clean finished surfaces as recommended by metal panel manufacturer. Maintain in a clean condition during construction.

B. After metal panel installation, clear weep holes and drainage channels of obstructions, dirt, and sealant.

C. Replace metal panels that have been damaged or have deteriorated beyond successful repair by finish touchup or similar minor repair procedures.

END OF SECTION 07 42 13

SECTION 07 46 46 - FIBER-CEMENT SIDING

PART 1 - GENERAL

1.1 SUMMARY

A. Section includes fiber-cement siding.

B. Related Requirements:
   1. Section 06 10 00 "Rough Carpentry" for wood furring, grounds, nailers, and blocking.
   2. Section 07 25 00 "Weather Barriers" for weather-resistive barriers.

1.2 COORDINATION

A. Coordinate siding installation with flashings and other adjoining construction to ensure proper sequencing.

1.3 SUBMITTALS

A. Product Data: For each type of product. Include construction details, material descriptions, dimensions of individual components and profiles, and finishes.

B. Samples for Verification: For each type, color, texture, and pattern required.
   1. 12-inch-long-by-actual-width Sample of siding.
   2. 12-inch-long-by-actual-width Samples of trim and accessories.

C. Product Test Reports: Based on evaluation of comprehensive tests performed by a qualified testing agency, for fiber-cement siding.

D. Sample Warranty: For special warranty.

1.4 CLOSEOUT SUBMITTALS

A. Maintenance Data: For each type of product, including related accessories, to include in maintenance manuals.

1.5 QUALITY ASSURANCE

A. Mockups: Build mockups to verify selections made under Sample submittals and to demonstrate aesthetic effects and to set quality standards for fabrication and installation.
   1. Build mockups for fiber-cement siding and soffit including accessories.
      a. Size: 48 inches long by 60 inches high.
      b. Include outside corner on one end of mockup and inside corner on the other end.
   2. Approval of mockups does not constitute approval of deviations from the Contract Documents contained in mockups unless Architect specifically approves such deviations in writing.
   3. Subject to compliance with requirements, approved mockups may become part of the completed Work if undisturbed at time of Substantial Completion.

1.6 DELIVERY, STORAGE, AND HANDLING

A. Deliver and store packaged materials in original containers with labels intact until time of use.

B. Store materials on elevated platforms, under cover, and in a dry location.

C. Store siding on edge or lay flat on a smooth level surface. Protect edges and corners from chipping.

1.7 WARRANTY

A. Special Warranty: Manufacturer agrees to repair or replace products that fail in materials or workmanship within specified warranty period.
   1. Failures include, but are not limited to, the following:
      a. Structural failures including cracking and deforming.
      b. Deterioration of materials beyond normal weathering.
   2. Warranty Period: 30 years from date of Substantial Completion.

PART 2 - PRODUCTS

2.1 MANUFACTURERS

A. Source Limitations: Obtain products, including related accessories, from single source from single manufacturer.

2.2 FIBER-CEMENT SIDING

A. General: ASTM C 1186, Type A, Grade II, fiber-cement board, noncombustible when tested according to ASTM E 136; with a flame-spread index of 25 or less when tested according to ASTM E 84.
   1. CertainTeed Corporation.
   2. James Hardie.
   3. GAF Materials Corporation.

B. Labeling: Provide fiber-cement siding that is tested and labeled according to ASTM C 1186 by a qualified testing agency acceptable to authorities having jurisdiction.

C. Nominal Thickness: Not less than 5/16 inch.

D. Horizontal Pattern: Boards width as indicated on Drawings wide in plain style.
   1. Texture: Smooth.

E. Panel Texture: 48-inch- wide sheets with smooth texture.

F. Factory Priming: Manufacturer's standard acrylic primer.

2.3 ACCESSORIES

A. Siding Accessories, General: Provide starter strips, edge trim, outside and inside corner caps, and other items as recommended by siding manufacturer for building configuration.
   1. Provide accessories matching color and texture of adjacent siding unless otherwise indicated.

B. Decorative Accessories: Provide the following fiber-cement decorative accessories as indicated:
   1. Moldings and trim.

C. Flashing: Provide aluminum flashing complying with Section 07 62 00 "Sheet Metal Flashing and Trim" at window and door heads and where indicated.
   1. Finish for Aluminum Flashing: High-performance organic finish.

D. Fasteners:

1. For fastening to wood, use siding nails or ribbed bugle-head screws of sufficient length to penetrate a minimum of 1 inch into substrate.
2. For fastening to metal, use ribbed bugle-head screws of sufficient length to penetrate a minimum of 1/4 inch, or three screw-threads, into substrate.
3. For fastening fiber cement, use hot-dip galvanized or stainless-steel fasteners.

PART 3 - EXECUTION

3.1 EXAMINATION

A. Examine substrates for compliance with requirements for installation tolerances and other conditions affecting performance of fiber-cement siding and related accessories.

B. Proceed with installation only after unsatisfactory conditions have been corrected.

3.2 PREPARATION

A. Clean substrates of projections and substances detrimental to application.

3.3 INSTALLATION

A. General: Comply with manufacturer's written installation instructions applicable to products and applications indicated unless more stringent requirements apply.
   1. Do not install damaged components.
   2. Install fasteners no more than 24 inches on center.

B. Install joint sealants as specified in Section 07 92 00 "Joint Sealants" and to produce a weathertight installation.

3.4 ADJUSTING AND CLEANING

A. Remove damaged, improperly installed, or otherwise defective materials and replace with new materials complying with specified requirements.

B. Clean finished surfaces according to manufacturer's written instructions and maintain in a clean condition during construction.

END OF SECTION 07 46 46

SECTION 07 53 23 - ETHYLENE-PROPYLENE-DIENE-MONOMER (EPDM) ROOFING

PART 1 - GENERAL

1.1 SUMMARY

A. Section Includes:
   1. Adhered ethylene-propylene-diene-monomer (EPDM) roofing system.
   2. Substrate board.
   3. Vapor retarder.
   4. Roof insulation.
   5. Cover board.
   6. Walkways.

B. Section includes the installation of insulation strips in ribs of roof deck. Insulation strips are furnished under Section 05 31 00 "Steel Decking."

C. Related Requirements:
   1. Section 06 10 00 "Rough Carpentry" for wood nailers, curbs, and blocking; and for wood-based, structural-use roof deck panels.
   2. Section 07 62 00 "Sheet Metal Flashing and Trim" for metal roof flashings and counter-flashings.

1.2 DEFINITIONS

A. Roofing Terminology: Definitions in ASTM D1079 and glossary of NRCA's "The NRCA Roofing Manual: Membrane Roof Systems" apply to work of this Section.

1.3 PREINSTALLATION MEETINGS

A. Preinstallation Roofing Conference: Conduct conference at Project site.
   1. Meet with Owner, Architect, roofing Installer, roofing system manufacturer's representative, and installers whose work interfaces with or affects roofing, including installers of roof accessories and roof-mounted equipment.
   2. Review methods and procedures related to roofing installation, including manufacturer's written instructions.
   3. Review and finalize construction schedule, and verify availability of materials, Installer's personnel, equipment, and facilities needed to make progress and avoid delays.
   4. Examine deck substrate conditions and finishes for compliance with requirements, including flatness and fastening.
   5. Review structural loading limitations of roof deck during and after roofing.
   6. Review base flashings, special roofing details, roof drainage, roof penetrations, equipment curbs, and condition of other construction that affects roofing system.
   7. Review governing regulations and requirements for insurance and certificates if applicable.
   8. Review temporary protection requirements for roofing system during and after installation.
   9. Review roof observation and repair procedures after roofing installation.

1.4 ACTION SUBMITTALS

A. Product Data: For each type of product.

B. Shop Drawings: For roofing system. Include plans, elevations, sections, details, and attachments to other work, including:
   1. Layout and thickness of insulation.
   2. Base flashings and membrane termination details.
   3. Flashing details at penetrations.
   4. Tapered insulation layout, thickness, and slopes.
   5. Insulation fastening patterns for corner, perimeter, and field-of-roof locations.
   6. Tie-in with adjoining air barrier.

C. Samples for Verification: For the following products:
   1. Walkway pads, of color required.

D. Wind Uplift Resistance Submittal: For roofing system, indicating compliance with wind uplift performance requirements.

1.5 INFORMATIONAL SUBMITTALS

A. Qualification Data: For Installer and manufacturer.

B. Field quality-control reports.

C. Sample Warranties: For manufacturer's special warranties.

1.6 CLOSEOUT SUBMITTALS

A. Maintenance Data: For roofing system to include in maintenance manuals.

1.7 QUALITY ASSURANCE

A. Manufacturer Qualifications: A qualified manufacturer that is UL listed for roofing system identical to that used for this Project.

B. Installer Qualifications: A qualified firm that is approved, authorized, or licensed by roofing system manufacturer to install manufacturer's product and that is eligible to receive manufacturer's special warranty.

1.8 DELIVERY, STORAGE, AND HANDLING

A. Deliver roofing materials to Project site in original containers with seals unbroken and labeled with manufacturer's name, product brand name and type, date of manufacture, approval or listing agency markings, and directions for storing and mixing with other components.

B. Store liquid materials in their original undamaged containers in a clean, dry, protected location and within the temperature range required by roofing system manufacturer. Protect stored liquid material from direct sunlight.
   1. Discard and legally dispose of liquid material that cannot be applied within its stated shelf life.

C. Protect roof insulation materials from physical damage and from deterioration by sunlight, moisture, soiling, and other sources. Store in a dry location. Comply with insulation manufacturer's written instructions for handling, storing, and protecting during installation.

D. Handle and store roofing materials, and place equipment in a manner to avoid permanent deflection of deck.

1.9 FIELD CONDITIONS

A. Weather Limitations: Proceed with installation only when existing and forecasted weather conditions permit roofing system to be installed according to manufacturer's written instructions and warranty requirements.

1.10 WARRANTY

A. Roofing Manufacturer’s Warranty: Manufacturer’s non-prorated, no-dollar-limit warranty in which the manufacturer agrees to repair or replace components of roofing system that fail in materials or workmanship within specified warranty period.
   1. Special warranty includes roof membrane, base flashings, roof insulation, fasteners, cover boards, substrate board, and other components of roofing system.
   2. Warranty Period: 20 years from date of Substantial Completion.

B. Roofing Installer’s Warranty: Submit roofing Installer's warranty, on warranty form at end of this Section, signed by Installer, covering the Work of this Section, including all components of roofing system such as roof membrane, base flashing, roof insulation, fasteners, cover boards, substrate boards, vapor retarders, and walkway products, for the following warranty period:
   1. Warranty Period: Two years from date of Substantial Completion.

PART 2 - PRODUCTS

2.1 PERFORMANCE REQUIREMENTS

A. General Performance: Installed roofing and base flashings shall withstand specified uplift pressures, thermally induced movement, and exposure to weather without failure due to defective manufacture, fabrication, installation, or other defects in construction. Roofing and base flashings shall remain watertight.
   1. Accelerated Weathering: Roofing system shall withstand 2000 hours of exposure when tested according to ASTM G 152, ASTM G 154, or ASTM G 155.
   2. Impact Resistance: Roof membrane shall resist impact damage when tested according to ASTM D3746, ASTM D4272, or the Resistance to Foot Traffic Test in FM Approvals 4470.
   3. Hail Resistance: UL 2218 Class 4 rating.

B. Material Compatibility: Roofing materials shall be compatible with one another and adjacent materials under conditions of service and application required, as demonstrated by roofing manufacturer based on testing and field experience.

C. Roofing System Design: Provide membrane roofing system that is identical to systems that have been successfully tested according to FM Approvals 4474, UL 580, or UL 1897 by a qualified testing and inspecting agency to resist uplift pressure calculated according to ASCE/SEI 7.
   1. Wind Uplift Pressure: Determine loads based on criteria indicated on Structural Drawings.
   2. Safety Factor: Not less than 2.0

D. Exterior Fire-Test Exposure: ASTM E 108 or UL 790, Class B; for application and roof slopes indicated; testing by a qualified testing agency. Identify products with appropriate markings of applicable testing agency.

2.2 ETHYLENE-PROPYLENE-DIENE-TERPOLYMER (EPDM) ROOFING

A. EPDM Sheet: ASTM D 4637, Type I, nonreinforced, uniform, flexible EPDM sheet.

1. Source Limitations: Obtain components for roofing system from roof membrane manufacturer or manufacturers approved by roof membrane manufacturer.
2. Manufacturers: Subject to compliance with requirements, provide products by one of the following:
   a. Carlisle SynTec Incorporated.
   b. Firestone Building Products.
   c. GenFlex Roofing Systems.
   d. Johns Manville; a Berkshire Hathaway company.
   e. Versico Incorporated.
3. Thickness: 60 mils, nominal.
4. Exposed Face Color: Black.

2.3 AUXILIARY ROOFING MATERIALS

A. General: Auxiliary materials recommended by roofing system manufacturer for intended use and compatible with roofing.
   1. Adhesive and Sealants: Comply with VOC limits of authorities having jurisdiction.

B. Sheet Flashing: 60-mil- thick EPDM, partially cured or cured, according to application.

C. Prefabricated Pipe Flashings: As recommended by roof membrane manufacturer.

D. Bonding Adhesive: Manufacturer's standard.

E. Seaming Material: Manufacturer's standard, synthetic-rubber polymer primer and 3-inch- wide minimum, butyl splice tape with release film.

F. Lap Sealant: Manufacturer's standard, single-component sealant, colored to match membrane roofing.

G. Water Cutoff Mastic: Manufacturer's standard butyl mastic sealant.

H. Metal Termination Bars: Manufacturer's standard, predrilled stainless-steel or aluminum bars, approximately 1 by 1/8-inch-thick; with anchors.

I. Fasteners: Factory-coated steel fasteners and metal or plastic plates complying with corrosion-resistance provisions in FM Global 4470, designed for fastening membrane to substrate, and acceptable to roofing system manufacturer.

J. Miscellaneous Accessories: Provide pourable sealers, preformed cone and vent sheet flashings, molded pipe boot flashings, preformed inside and outside corner sheet flashings, reinforced EPDM securement strips, T-joint covers, in-seam sealants, termination reglets, cover strips, and other accessories.

2.4 SUBSTRATE BOARDS

A. Substrate Board: ASTM C 1177/C 1177M, glass-mat, water-resistant gypsum substrate.
   1. Products: Subject to compliance with requirements, provide one of the following:
      a. Georgia-Pacific Corporation; Dens Deck.
      b. National Gypsum Company; DEXcell FA Glass Mat Roof Board.
      c. USG Corporation; USG Securock Brand Glass-Mat Roof Board.
   2. Thickness: Type X, 5/8 inch thick.

B. Fasteners: Factory-coated steel fasteners and metal or plastic plates complying with corrosion-resistance provisions in FM Global 4470, designed for fastening substrate panel to roof deck.

2.5 VAPOR RETARDER

A. Self-Adhering Vapor Barrier: SBS modified bitumen adhesive, factory laminated to a tri-laminate woven, high-density polyethylene or reinforced composite aluminum foil top surface with polymeric release liner.
   1. Products:
      a. Carlisle SynTec Incorporated; VapAir Seal MD Air and Vapor Barrier.
      b. Firestone; V-Force Vapor Barrier Membrane.

2.6 ROOF INSULATION

A. General:
   1. Provide preformed roof insulation boards manufactured or approved by roofing manufacturer, selected from manufacturer's standard sizes suitable for application, and of thicknesses required to achieve specified R-value.

B. Roof Insulation: UL classified; FM Class 1 Approved; in compliance with FM 4450 or UL 1256 for direct-to-steel deck installation where applicable. Provide one of the following:
   1. Polyisocyanurate Board Insulation: ASTM C 1289, Type II, Class 1, Grade 2, felt or glass-fiber mat facer on both major surfaces.
      a. R-value of 5.0 per inch shall be used to calculate the required thickness of polyisocyanurate board insulation.
   2. Expanded-Polystyrene Board Insulation (EPS): ASTM C 578, Type IX, 1.8-lb/cu. ft. minimum density.
      a. R-value of 4.6 per inch shall be used to calculate the required thickness of the EPS board insulation

C. Tapered Insulation: Provide factory-tapered insulation boards.
   1. Minimum Thickness: 1/4 inch.
   2. Slope:
      a. Roof Field: 1/4 inch per foot unless otherwise indicated on Drawings.
      b. Saddles and Crickets: 1/2 inch per foot unless otherwise indicated on Drawings.

2.7 INSULATION ACCESSORIES

A. General: Roof insulation accessories recommended by insulation manufacturer for intended use and compatibility with other roofing system components.

B. Fasteners: Factory-coated steel fasteners and metal or plastic plates complying with corrosion-resistance provisions in FM Global 4470, designed for fastening roof insulation and cover boards to substrate, and acceptable to roofing system manufacturer.

C. Insulation Adhesive: Insulation manufacturer's recommended adhesive formulated to attach roof insulation to substrate or to another insulation layer as follows:
   1. Bead-applied, low-rise, one-component or multicomponent urethane adhesive.

D. Cover Board: Subject to compliance with requirements, provide one of the following:
   1. Glass-Mat, Water-Resistant Gypsum Cover Board: ASTM C 1177/C 1177M; 1/4-inch-thickness.
      a. Georgia-Pacific Corporation; Dens Deck or Dens Deck Prime with EONIC Technology.
      b. National Gypsum Company; DEXcell FA Glass Mat Roof Board.
      c. USB Securock Glass-Mat Roof Board.
   2. High-Density Polyisocyanurate Cover Board: ASTM C1289 Type II, Class 4, Grade 1; closed-cell, polyisocyanurate foam and coated glass facers; 1/2-inch thickness.

a. Carlisle SynTec Incorporated; SecurShield HD Cover Board
b. Firestone Building Products; Isogard HD Cover Board.

2.8 WALKWAYS

A. Flexible Walkways: Factory-formed, nonporous, heavy-duty, solid-rubber, slip-resisting, surface-textured walkway pads, approximately 3/16-inch-thick and acceptable to roofing system manufacturer.

PART 3 - EXECUTION

3.1 EXAMINATION

A. Examine substrates, areas, and conditions, with Installer present, for compliance with requirements and other conditions affecting performance of the Work.
1. Verify that roof openings and penetrations are in place, curbs are set and braced, and roof-drain bodies are securely clamped in place.
2. Verify that wood blocking, curbs, and nailers are securely anchored to roof deck at penetrations and terminations and that nailers match thicknesses of insulation.
3. Verify that concrete substrate is visibly dry and free of moisture, and that minimum concrete internal relative humidity is not more than 75 percent, or as recommended by roofing system manufacturer, when tested according to ASTM F2170.
   a. Test Frequency: One test probe per each 1000 sq. ft., or portion thereof, of roof deck, with not less than three tests probes.
   b. Submit test reports within 24 hours after performing tests.
4. Verify that concrete-curing compounds that will impair adhesion of roofing components to roof deck have been removed.
5. Verify that joints in precast concrete roof decks have been grouted flush with top of concrete.

B. Proceed with installation only after unsatisfactory conditions have been corrected.

3.2 PREPARATION

A. Clean substrate of dust, debris, moisture, and other substances detrimental to roofing installation according to roofing system manufacturer's written instructions. Remove sharp projections.

B. Prevent materials from entering and clogging roof drains and conductors and from spilling or migrating onto surfaces of other construction. Remove roof-drain plugs when no work is taking place or when rain is forecast.

C. Install sound-absorbing insulation strips according to acoustical roof deck manufacturer's written instructions.

3.3 INSTALLATION OF ROOFING, GENERAL

A. Install roofing system according to roofing system manufacturer's written instructions.

B. Complete terminations and base flashings and provide temporary seals to prevent water from entering completed sections of roofing system at the end of the workday or when rain is forecast. Remove and discard temporary seals before beginning work on adjoining roofing.

C. Install roofing and auxiliary materials to tie into existing roofing to maintain weathertightness of transition and to not void warranty for existing roofing system.

3.4 INSTALLATION OF SUBSTRATE BOARD

A. Install substrate board with long joints in continuous straight lines, with end joints staggered not less than 24 inches in adjacent rows.
   1. Tightly butt substrate boards together.
   2. Cut substrate board to fit tight around penetrations and projections, and to fit tight to intersecting sloping roof decks.

3.5 INSTALLATION OF VAPOR RETARDER

A. Self-Adhering-Sheet Vapor Retarder: Prime substrate if required by manufacturer. Install self-adhering-sheet vapor retarder over area to receive vapor retarder, side and end lapping each sheet a minimum of 3-1/2 and 6 inches, respectively.
   1. Extend vertically up parapet walls and projections to a minimum height equal to height of insulation and cover board.
   2. Seal laps by rolling.

B. Completely seal vapor retarder at terminations, obstructions, and penetrations to prevent air movement into roofing system.

3.6 INSTALLATION OF INSULATION AND COVER BOARDS

A. Coordinate installing roofing system components, so insulation is not exposed to precipitation or left exposed at the end of the workday.

B. Comply with roofing system and insulation manufacturer's written instructions for installing roof insulation.

C. Install insulation under areas of roofing in thicknesses required to achieve R-value indicated on Drawings.
   1. Install insulation with end joints staggered not less than 12 inches in adjacent rows and with long joints continuous at right angle to flutes of decking.
   2. Install two or more layers of insulation with joints of each succeeding layer staggered from joints of previous layer a minimum of 12 inches in each direction.
   3. Make joints between adjacent insulation boards not more than 1/4 inch in width.
   4. Trim insulation neatly to fit within 1/4 inch of nailers, penetrations and projections, and to fit tight to intersecting sloping roof decks.
   5. Fill gaps exceeding 1/4 inch with insulation.
   6. At internal roof drains, slope insulation to create a square drain sump with each side equal to the diameter of the drain bowl plus 24 inches.
      a. Trim insulation so that water flow is unrestricted.

D. Install cover board over insulation with long joints in continuous straight lines with end joints staggered between rows. Offset joints of insulation below a minimum of 6 inches in each direction.
   1. Trim cover board neatly to fit around penetrations and projections, and to fit tight to intersecting sloping roof decks.
   2. At internal roof drains, conform to slope of drain sump.
      a. Trim cover board so that water flow is unrestricted.
   3. Cut and fit cover board tight to nailers, projections, and penetrations.

E. Mechanically Fastened Insulation and Cover Board: Secure top layer to deck using mechanical fasteners specifically designed and sized for fastening specified board-type to deck type. Locate fasteners at high point of deck flutes at acoustical metal deck locations or where metal deck remains permanently exposed to view.

1. Fasten insulation and cover board to resist uplift pressure at corners, perimeter, and field of roof.

F. Install tapered insulation under areas of roofing to conform to slopes indicated.

3.7 INSTALLATION OF ADHERED ROOF MEMBRANE

A. Adhere roofing over area to receive roofing according to membrane roofing system manufacturer's written instructions.

B. Unroll membrane roofing and allow to relax before installing.

C. Start installation of roofing in presence of roofing system manufacturer's technical personnel.

D. Accurately align roofing and maintain uniform side and end laps of minimum dimensions required by manufacturer. Stagger end laps.

E. Bonding Adhesive: Apply to substrate and underside of roofing at rate required by manufacturer and allow to partially dry before installing roofing. Do not apply to splice area of roofing.

F. In addition to adhering, mechanically fasten roofing membrane securely at terminations, penetrations, and perimeters of roofing.

G. Apply roofing membrane with side laps shingled with slope of roof deck where possible.

H. Tape Seam Installation: Clean and prime both faces of splice areas, apply splice tape, and firmly roll side and end laps of overlapping roofing according to manufacturer's written instructions to ensure a watertight seam installation. Apply lap sealant and seal exposed edges of roofing terminations.

I. Repair tears, voids, and lapped seams in roofing that do not comply with requirements.

J. Spread sealant or mastic bed over deck-drain flange at roof drains, and securely seal membrane roofing in place with clamping ring.

3.8 INSTALLATION OF BASE FLASHING

A. Install sheet flashings and preformed flashing accessories and adhere to substrates according to roofing system manufacturer's written instructions.

B. Apply bonding adhesive to substrate and underside of sheet flashing at required rate and allow to partially dry. Do not apply to seam area of flashing.

C. Flash penetrations and field-formed inside and outside corners with cured or uncured sheet flashing.

D. Clean splice areas, apply splicing cement, and firmly roll side and end laps of overlapping sheets to ensure a watertight seam installation. Apply lap sealant and seal exposed edges of sheet flashing terminations.

E. Terminate and seal top of sheet flashings and mechanically anchor to substrate through termination bars.

3.9 INSTALLATION OF WALKWAYS

A. Flexible Walkways: Install walkway products in locations indicated.
   1. Provide 6-inch clearance between adjoining pads.
   2. Adhere walkway products to substrate with compatible adhesive according to roofing system manufacturer's written instructions.

3.10 FIELD QUALITY CONTROL

A. Final Roof Inspection: Arrange for roofing system manufacturer's technical personnel to inspect roofing installation on completion. Coordinate date and time of final roof inspection with Owner’s Representative to allow attendance.

B. Repair or remove and replace components of roofing system where inspections indicate that they do not comply with specified requirements.

C. Additional testing and inspecting, at Contractor's expense, will be performed to determine if replaced or additional work complies with specified requirements.

3.11 PROTECTING AND CLEANING

A. Protect membrane roofing system from damage and wear during remainder of construction period. When remaining construction does not affect or endanger roofing, inspect roofing for deterioration and damage, describing its nature and extent in a written report, with copies to Architect and Owner.

B. Correct deficiencies in or remove membrane roofing system that does not comply with requirements, repair substrates, and repair or reinstall membrane roofing system to a condition free of damage and deterioration at time of Substantial Completion and according to warranty requirements.

C. Clean overspray and spillage from adjacent construction using cleaning agents and procedures recommended by manufacturer of affected construction.

3.12 ROOFING INSTALLER'S WARRANTY

PROJECT:

OWNER:

The undersigned agrees, for a period of two (2) years from the date of Substantial Completion of the Project, to repair leaks or other faults due to improper materials and workmanship and replace defective materials that may develop in the roofing system. This warranty includes all components of the roofing system installed under this contract.

Cost of labor and materials required to fulfill this agreement will be borne by the undersigned on a non-prorated basis. Leaks shall be responded to within 24 hours and required repairs and replacement shall be completed within seven (7) days from the date of notification that defects exist; otherwise the Owner may have such repairs and/or replacement made and the undersigned agrees to pay all costs of same within thirty (30) days from date that such repair work is done.

Start Date of Guarantee (Date of Substantial Completion) _____

_____
Signature

_____
Roofing Subcontractor

END OF SECTION 07 53 23

SECTION 07 62 00-SHEET METAL FLASHING AND TRIM

PART 1 - GENERAL

1.1 SUMMARY

A. Section Includes:
   1. Parapet copings.
   2. Flashings and counter-flashings.
   3. Reglets and flashings at masonry.
   4. Roof-edge drainage systems (including hanging gutters, screens, and downspouts).

B. Related Sections:
   1. Division 06 Section "Rough Carpentry" for wood nailers, curbs, and blocking.
   2. Division 07 Section “EPDM roofing”

1.2 PERFORMANCE REQUIREMENTS

A. General: Sheet metal flashing and trim assemblies as indicated shall withstand wind loads, structural movement, thermally induced movement, and exposure to weather without failure due to defective manufacture, fabrication, installation, or other defects in construction. Completed sheet metal flashing and trim shall not rattle, leak, or loosen, and shall remain watertight.

B. Fabricate and install copings capable of resisting forces according to ANSI/SPRI ES-1 Wind Design Standard for Edge Systems Used with Low Slope Roofing Systems.

C. Thermal Movements: Provide sheet metal flashing and trim that allows for thermal movements from ambient and surface temperature changes.
   1. Temperature Change (Range): 120° F, ambient; 180° F, material surfaces.

1.3 SUBMITTALS

A. Product Data: For each type of product indicated. Include construction details, material descriptions, dimensions of individual components and profiles, and finishes for each manufactured product and accessory.

B. Shop Drawings: Show fabrication and installation layouts of sheet metal flashing and trim, including plans, elevations, expansion-joint locations, and keyed details. Distinguish between shop- and field-assembled work. Include the following:
   1. Identification of material, thickness, weight, and finish for each item and location in Project.
   2. Details for forming sheet metal flashing and trim, including profiles, shapes, seams, and dimensions.
   3. Details for joining, supporting, and securing sheet metal flashing and trim, including layout of fasteners, cleats, clips, and other attachments. Include pattern of seams.
   4. Details of termination points and assemblies, including fixed points.
   5. Details of expansion joints and expansion-joint covers, including showing direction of expansion and contraction.
   6. Details of edge conditions, including eaves, ridges, valleys, rakes, crickets, and counter-flashings as applicable.
   7. Details of special conditions.
   8. Details of connections to adjoining work.
   9. Detail formed flashing and trim at a scale of not less than 3 inches per 12 inches.

C. Samples for Verification: For each type of exposed finish required, prepared on Samples of size indicated below:
   1. Sheet Metal Flashing: 12 inches long by actual width of unit, including finished seam and in required profile. Include fasteners, cleats, clips, closures, and other attachments.

D. Manufacturer Certificates: Signed by sheet metal manufacturer certifying that coping system complies with requirements specified in "Performance Requirements" Article.
   1. Submit evidence of meeting performance requirements.

E. Qualification Data: For qualified fabricator.

F. Warranty: Sample of special warranty.

1.4 QUALITY ASSURANCE

A. Fabricator Qualifications: Shop that employs skilled workers who custom fabricate sheet metal flashing and trim similar to that required for this Project and whose products have a record of successful in-service performance.

B. Sheet Metal Coping: Copings shall be certified by the coping manufacturer or fabricator to meet performance design criteria according to the following test standards:
   1. ANSI/SPRI ES-1 Test RE-3 for Coping: Wind Design Standard for Edge Systems Used with Low Slope Roofing Systems (current edition). The coping system shall be tested simultaneously on horizontal and vertical surfaces and shall exceed horizontal and vertical design wind pressure as calculated in accord with the ANSI/SPRI ES-1 Test RE-3.

C. Sheet Metal Flashing and Trim Standard: Comply with SMACNA's "Architectural Sheet Metal Manual" unless more stringent requirements are specified or shown on Drawings.
   1. Sheet metal copings shall be certified by the coping manufacturer or fabricator to meet performance design criteria according to ANSI/SPRI ES-1 Wind Design Standard for Edge Systems Used with Low Slope Roofing Systems (Current Edition).

1.5 DELIVERY, STORAGE, AND HANDLING

A. Do not store sheet metal flashing and trim materials in contact with other materials that might cause staining, denting, or other surface damage. Store sheet metal flashing and trim materials away from uncured concrete and masonry.

B. Protect strippable protective covering on sheet metal flashing and trim from exposure to sunlight and high humidity, except to the extent necessary for the period of sheet metal flashing and trim installation.

1.6 WARRANTY

A. Special Warranty on Finishes: Manufacturer's standard form in which manufacturer agrees to repair finish or replace sheet metal flashing and trim that shows evidence of deterioration of factory-applied finishes within specified warranty period.
   1. Exposed Panel Finish: Deterioration includes, but is not limited to, the following:
      a. Color fading more than 5 Hunter units when tested according to ASTM D 2244.
      b. Chalking in excess of a No. 8 rating when tested according to ASTM D 4214.
      c. Cracking, checking, peeling, or failure of paint to adhere to bare metal.
   2. Finish Warranty Period: 20 years from date of Substantial Completion.

PART 2 - PRODUCTS

2.1 SHEET METALS

A. General: Protect mechanical and other finishes on exposed surfaces from damage by applying a strippable, temporary protective film before shipping.

B. Aluminum Sheet: ASTM B 209, alloy as standard with manufacturer for finish required, with temper as required to suit forming operations and performance required; with smooth, flat surface.
   1. Thickness: 0.040 inch, unless otherwise indicated.
   2. Factory Prime Coating: Pretreat metal with white or light-colored, factory-applied, baked-on epoxy primer coat; minimum dry film thickness of 0.2 mil.
   3. Finish: Field painted finish as specified in Section 09 91 00.

C. Metallic-Coated Steel Sheet: Restricted flatness steel sheet, pre-painted by the coil-coating process to comply with ASTM A 755/A 755M.
   1. Exposed Coil-Coated Finish:
      a. Two-Coat Fluoropolymer: AAMA 621. Fluoropolymer finish containing not less than 70 percent PVDF resin by weight in color coat. Prepare, pretreat, and apply coating to exposed metal surfaces to comply with coating and resin manufacturers' written instructions.
      b. Color(s): As selected by Architect from manufacturers full color range.
   2. Concealed Finish: Pretreat with manufacturer's standard white or light-colored acrylic or polyester backer finish, consisting of prime coat and wash coat with a minimum total dry film thickness of 0.5 mil.

2.2 UNDERLAYMENT MATERIALS

A. Self-Adhering, High-Temperature Sheet: Minimum 30 to 40 mils thick, consisting of slip-resisting polyethylene-film top surface laminated to layer of butyl or SBS-modified asphalt adhesive, with release-paper backing; cold applied. Provide primer when recommended by underlayment manufacturer.
   1. Thermal Stability: ASTM D 1970; stable after testing at 240 deg F.
   2. Low-Temperature Flexibility: ASTM D 1970; passes after testing at minus 20 deg F.
   3. Products: Subject to compliance with requirements, provide one of the following:
      a. Carlisle Coatings & Waterproofing Inc.; CCW WIP 300HT.
      b. GCP Applied Technologies; Ice and Water Shield HT.
      c. Henry Company; Blueskin PE200 HT.
      d. Metal-Fab Manufacturing, LLC; MetShield.
      e. Owens Corning; WeatherLock Metal High Temperature Underlayment.

2.3 MISCELLANEOUS MATERIALS

A. General: Provide materials and types of fasteners, solder, welding rods, protective coatings, separators, sealants, and other miscellaneous items as required for complete sheet metal flashing and trim installation and recommended by manufacturer of primary sheet metal or manufactured item unless otherwise indicated.

B. Fasteners: Wood screws, annular threaded nails, self-tapping screws, self-locking rivets and bolts, and other suitable fasteners designed to withstand design loads.
   1. General: Blind fasteners or self-drilling screws, gasketed, with hex-washer head.
      a. Exposed Fasteners: Heads matching color of sheet metal using plastic caps or factory-applied coating.

b. Blind Fasteners: High-strength aluminum or stainless-steel rivets suitable for metal being fastened.

2. Fastener Material: ASTM F 2329 or Series 300 stainless steel.

C. Sealant Tape: Pressure-sensitive, 100 percent solids, gray polyisobutylene compound sealant tape with release-paper backing. Provide permanently elastic, non-sag, nontoxic, non-staining tape 1/2-inch-wide and 1/8 inch thick.

D. Elastomeric Sealant: ASTM C 920, elastomeric silicone polymer sealant; low modulus; of type, grade, class, and use classifications required to seal joints in sheet metal flashing and trim and remain watertight.

E. Reglets: Recessed type, stainless-steel.

F. Butyl Sealant: ASTM C 1311, single-component, solvent-release butyl rubber sealant; polyisobutylene plasticized; heavy bodied for hooked-type expansion joints with limited movement.

G. Bituminous Coating: Cold-applied asphalt emulsion complying with ASTM D 1187.

H. Asphalt Roofing Cement: ASTM D 4586, asbestos free, of consistency required for application.

2.4 FABRICATION, GENERAL

A. General: Custom fabricate sheet metal flashing and trim to comply with recommendations in SMACNA's "Architectural Sheet Metal Manual" that apply to design, dimensions, geometry, metal thickness, and other characteristics of item indicated. Fabricate items at the shop to greatest extent possible.

1. Fabricate sheet metal flashing and trim in thickness or weight needed to comply with performance requirements, but not less than that specified for each application and metal.
2. Obtain field measurements for accurate fit before shop fabrication.
3. Form sheet metal flashing and trim without excessive oil canning, buckling, and tool marks and true to line and levels indicated, with exposed edges folded back to form hems.
4. Conceal fasteners and expansion provisions where possible. Exposed fasteners are not allowed on faces exposed to view.

B. Fabricate copings and flashings in minimum 96-inch-long, but not exceeding 10-foot-long, sections. Fabricate joint plates of same thickness as copings. Furnish with continuous cleats to support edge of external leg and drill elongated holes for fasteners on interior leg. Miter corners and seal watertight.

1. Coping Profile: As indicated on Drawings.
2. Joint Style: Butt, with 12-inch- wide, concealed backup plate.

C. Hem exposed edges on underside 1/2 inch; miter and seam corners.

D. Fabricate vertical faces with bottom edge formed outward 1/4 inch and hemmed to form drip.

E. Fabrication Tolerances: Fabricate sheet metal flashing and trim that is capable of installation to a tolerance of 1/4 inch in 20 feet on slope and location lines as indicated and within 1/8-inch offset of adjoining faces and of alignment of matching profiles.

F. Sealed Joints: Form non-expansion but movable joints in metal to accommodate elastomeric sealant.

G. Expansion Provisions: Where lapped expansion provisions cannot be used, form expansion joints of intermeshing hooked flanges, not less than 1 inch deep, filled with butyl sealant concealed within joints.

H. Seams: Fabricate nonmoving seams with flat-lock seams. Form seams and seal with elastomeric sealant unless otherwise recommended by sealant manufacturer for intended use. Rivet joints where necessary for strength.

I. Do not use graphite pencils to mark metal surfaces.

J. Hanging Gutters:
   1. Fabricate to cross section indicated, complete with end pieces, outlet tubes, and other accessories as required.
   2. Fabricate in minimum 96-inch- long sections.
   3. Furnish flat-stock gutter straps or gutter brackets fabricated from same metal as gutters, of size recommended by SMACNA but not less than twice the gutter thickness.
   4. Fabricate expansion joints, expansion-joint covers, gutter bead reinforcing bars, and gutter accessories from same metal as gutters.
   5. Gutter Profile: K-Style in accordance with cited sheet metal standard.
   6. Gutters with Girth up to 15 Inches (380 mm): Fabricate from the following materials:
      a. Coated Steel, 0.022 inch (0.56 mm) thick.

K. Downspouts: Fabricate downspouts complete with matching elbows. Furnish with metal hangers, from same material as downspouts, and anchors.

PART 3 - EXECUTION

3.1 EXAMINATION

A. Examine substrates, areas, and conditions, with Installer present, to verify actual locations, dimensions and other conditions affecting performance of the Work.
   1. Verify compliance with requirements for installation tolerances of substrates.
   2. Verify that substrate is sound, dry, smooth, clean, sloped for drainage, and securely anchored.

B. Proceed with installation only after unsatisfactory conditions have been corrected.

3.2 INSTALLATION

A. General: Anchor sheet metal flashing and trim and other components of the Work securely in place, with provisions for thermal and structural movement. Use fasteners, protective coatings, separators, sealants, and other miscellaneous items as required to complete sheet metal flashing and trim system.
   1. Install sheet metal flashing and trim true to line and levels indicated. Provide uniform, neat seams with minimum exposure of solder, welds, and sealant.
   2. Install sheet metal flashing and trim to fit substrates and to result in watertight performance. Verify shapes and dimensions of surfaces to be covered before fabricating sheet metal.
   3. Install exposed sheet metal flashing and trim without excessive oil canning, buckling, and tool marks.
   4. Install sealant tape where indicated.
   5. Torch cutting of sheet metal flashing and trim is not permitted.
   6. Do not use graphite pencils to mark metal surfaces.

B. Metal Protection: Where dissimilar metals will contact each other or corrosive substrates, protect against galvanic action by painting contact surfaces with bituminous coating or by other permanent separation as recommended by SMACNA.
   1. Coat back side of uncoated aluminum sheet metal flashing and trim with bituminous coating where flashing and trim will contact wood, ferrous metal, or cementitious construction.
   2. Underlayment: Where installing metal flashing directly on cementitious or wood substrates, install a course of felt underlayment and cover with a slip sheet or install a course of polyethylene sheet.

C. Expansion Provisions: Provide for thermal expansion of exposed flashing and trim. Space movement joints at a maximum of 10 feet with no joints allowed within 24 inches of corner or intersection. Where lapped expansion provisions cannot be used or would not be sufficiently watertight, form expansion joints of intermeshing hooked flanges, not less than 1 inch deep, filled with sealant concealed within joints.

D. Fastener Sizes: Use fasteners of sizes that will penetrate wood substrates not less than 3/4 inch for screws.

E. Seal joints as shown and as required for watertight construction.
   1. Where sealant-filled joints are used, embed hooked flanges of joint members not less than 1 inch into sealant. Form joints to completely conceal sealant. When ambient temperature at time of installation is moderate, between 40° and 70° F, set joint members for 50 percent movement each way. Adjust setting proportionately for installation at higher ambient temperatures. Do not install sealant-type joints at temperatures below 40° F.
   2. Prepare joints and apply sealants to comply with requirements in Division 07 Section "Joint Sealants."

3.3 FLASHING INSTALLATION

A. General: Install sheet metal flashing and trim to comply with performance requirements, sheet metal manufacturer's written installation instructions, and SMACNA's "Architectural Sheet Metal Manual." Provide concealed fasteners where possible, set units true to line, and level as indicated. Install work with laps, joints, and seams that will be permanently watertight and weather resistant.

B. Copings: Anchor to resist uplift and outward forces according to “Performance Requirements” indicated.

C. Counterflashing: Coordinate installation of counterflashing with installation of base flashing. Insert counterflashing in reglets or receivers and fit tightly to base flashing. Lap counterflashing joints a minimum of 4 inches and bed with sealant. Secure in a waterproof manner by means of snap-in installation and sealant or lead wedges and sealant.

D. Roof-Penetration Flashing: Coordinate installation of roof-penetration flashing with installation of roofing and other items penetrating roof. Seal with elastomeric sealant and clamp flashing to pipes that penetrate roof.

E. Joints: Where exposed coping or flashing length is less than the minimum specified, install as a single piece without joints. Where the length is greater than the minimum specified, install as to minimize the number of joints.

3.4 ROOF DRAINAGE SYSTEM INSTALLATION

A. General: Install sheet metal roof drainage items to produce complete roof drainage system according to SMACNA recommendations and as indicated. Coordinate installation of roof perimeter flashing with installation of roof drainage system.

B. Hanging Gutters:
   1. Join sections with lapped joints sealed with sealant. Provide for thermal expansion.
   2. Attach gutters at eave or fascia to firmly anchored gutter brackets or straps spaced not more than 36 inches apart.
   3. Provide end closures and seal watertight with sealant.
   4. Slope to downspouts.
   5. Fasten gutter spacers to front and back of gutter.
   6. Loosely lock straps to front gutter bead and anchor to roof deck.
   7. Anchor and loosely lock back edge of gutter to continuous cleat, eave or apron flashing.
   8. Anchor back of gutter that extends onto roof deck with cleats spaced not more than 24 inches apart.
   9. Install gutter with expansion joints at locations indicated, but not exceeding, 50 feet apart. Install expansion-joint caps.
   10. Install continuous gutter screens on gutters with noncorrosive fasteners, removable for cleaning gutters.

C. Downspouts: Join sections with 1-1/2-inch telescoping joints.
   1. Provide hangers with fasteners designed to hold downspouts securely to walls. Locate hangers at top and bottom and at approximately 60 inches on center in between.
   2. Provide elbows at base of downspout to direct water away from building.

D. Conductor Heads: Anchor securely to wall with elevation of conductor head rim 1 inch below scupper discharge.

3.5 ERECTION TOLERANCES

A. Installation Tolerances: Shim and align sheet metal flashing and trim within installed tolerance of 1/4 inch in 20 feet on slope and location lines as indicated and within 1/8-inch offset of adjoining faces and of alignment of matching profiles.

3.6 CLEANING AND PROTECTION

A. Clean off excess sealants.

B. Remove temporary protective coverings and strippable films as sheet metal flashing and trim are installed unless otherwise indicated in manufacturers written installation instructions. On completion of installation, remove unused materials and clean finished surfaces. Maintain in a clean condition during construction.

C. Replace sheet metal flashing and trim that have been damaged or that have deteriorated beyond successful repair by finish touchup or similar minor repair procedures.

END OF SECTION 07 62 00

SECTION 07 92 00-JOINT SEALANTS

PART 1 - GENERAL

1.1 SUMMARY

A. This Section includes joint sealants for the following applications, including those specified by reference to this Section:
   1. Exterior joints in the following vertical surfaces and horizontal nontraffic surfaces:
      a. Construction joints in cast-in-place concrete.
      b. Control and expansion joints in unit masonry.
      c. Joints between different materials listed above.
      d. Perimeter joints between exterior wall surfaces and frames of doors, windows, and louvers.
      e. Other joints as indicated.
   2. Interior joints in the following vertical surfaces and horizontal nontraffic surfaces:
      a. Control and expansion joints on exposed interior surfaces of exterior walls.
      b. Perimeter joints of exterior openings where indicated.
      c. Vertical joints on exposed surfaces of interior unit masonry, concrete walls, and partitions.
      d. Perimeter joints between interior wall surfaces and frames of interior doors and windows.
      e. Other joints as indicated.

B. Related Sections include the following:
   1. Division 08 Section "Glazing" for glazing sealants.

1.2 PERFORMANCE REQUIREMENTS

A. Provide elastomeric joint sealants that establish and maintain watertight and airtight continuous joint seals without staining or deteriorating joint substrates.

1.3 SUBMITTALS

A. Product Data: For each joint-sealant product indicated.

B. Samples for Initial Selection: Manufacturer's color charts consisting of strips of cured sealants showing the full range of colors available for each product exposed to view.

C. Qualification Data: For Installer.

D. Field Test Report Log: For each elastomeric sealant application.

E. Warranties: Special warranties specified in this Section.

1.4 QUALITY ASSURANCE

A. Installer Qualifications: Manufacturer's authorized Installer who is approved or licensed for installation of elastomeric sealants required for this Project.

B. Source Limitations: Obtain each type of joint sealant through one source from a single manufacturer.

1.5 PROJECT CONDITIONS

A. Do not proceed with installation of joint sealants under the following conditions:
   1. When ambient and substrate temperature conditions are outside limits permitted by joint-sealant manufacturer or are below 40° F.
   2. When joint substrates are wet.
   3. Where joint widths are less than those allowed by joint-sealant manufacturer for applications indicated.
   4. Contaminants capable of interfering with adhesion have not yet been removed from joint substrates.

1.6 WARRANTY

A. Special Installer's Warranty: Installer's standard form in which Installer agrees to repair or replace elastomeric joint sealants that do not comply with performance and other requirements specified in this Section within specified warranty period.
   1. Warranty Period: Five years from date of Substantial Completion.

B. Special Manufacturer's Warranty: Manufacturer's standard form in which elastomeric sealant manufacturer agrees to furnish elastomeric joint sealants to repair or replace those that do not comply with performance and other requirements specified in this Section within specified warranty period.
   1. Warranty Period: Five years from date of Substantial Completion.

C. Special warranties specified in this Article exclude deterioration or failure of elastomeric joint sealants from the following:
   1. Movement of the structure resulting in stresses on the sealant exceeding sealant manufacturer's written specifications for sealant elongation and compression caused by structural settlement or errors attributable to design or construction.
   2. Disintegration of joint substrates from natural causes exceeding design specifications.
   3. Mechanical damage caused by individuals, tools, or other outside agents.
   4. Changes in sealant appearance caused by accumulation of dirt or other atmospheric contaminants.

PART 2 - PRODUCTS

2.1 MANUFACTURERS

A. Products: Subject to compliance with requirements, provide one of the products listed in Sealant Schedule at end of Part 3.

2.2 MATERIALS, GENERAL

A. Compatibility: Provide joint sealants, backings, and other related materials that are compatible with one another and with joint substrates under conditions of service and application, as demonstrated by sealant manufacturer, based on testing and field experience.

B. Colors of Exposed Joint Sealants: As selected by Architect from manufacturer's full range.

2.3 ELASTOMERIC JOINT SEALANTS

A. Elastomeric Sealants: Comply with ASTM C 920 and other requirements indicated for each liquid-applied chemically curing sealant specified, including those referencing ASTM C 920 classifications for type, grade, class, and uses related to exposure and joint substrates.

B. Stain-Test-Response Characteristics: Where elastomeric sealants are specified to be non-staining to porous substrates, provide products that have undergone testing according to ASTM C 1248 and have not stained porous joint substrates indicated for Project.

2.4 JOINT-SEALANT BACKING

A. General: Provide sealant backings of material and type that are non-staining; are compatible with joint substrates, sealants, primers, and other joint fillers; and are approved for applications indicated by sealant manufacturer based on field experience and laboratory testing.

B. Cylindrical Sealant Backings: ASTM C 1330, Type B (bicellular material with a surface skin) as approved in writing by joint-sealant manufacturer for joint application indicated, and of size and density to control sealant depth and otherwise contribute to producing optimum sealant performance.

C. Bond-Breaker Tape: Polyethylene tape or other plastic tape recommended by sealant manufacturer for preventing sealant from adhering to rigid, inflexible joint-filler materials or joint surfaces at back of joint where such adhesion would result in sealant failure. Provide self-adhesive tape where applicable.

2.5 MISCELLANEOUS MATERIALS

A. Primer: Material recommended by joint-sealant manufacturer where required for adhesion of sealant to joint substrates indicated, as determined from preconstruction joint-sealant-substrate tests and field tests.

B. Cleaners for Nonporous Surfaces: Chemical cleaners acceptable to manufacturers of sealants and sealant backing materials, free of oily residues or other substances capable of staining or harming joint substrates and adjacent nonporous surfaces in any way, and formulated to promote optimum adhesion of sealants to joint substrates.

C. Masking Tape: Non-staining, nonabsorbent material compatible with joint sealants and surfaces adjacent to joints.

PART 3 - EXECUTION

3.1 EXAMINATION

A. Examine joints indicated to receive joint sealants, with Installer present, for compliance with requirements for joint configuration, installation tolerances, and other conditions affecting joint-sealant performance.

B. Proceed with installation only after unsatisfactory conditions have been corrected.

3.2 PREPARATION

A. Surface Cleaning of Joints: Clean out joints immediately before installing joint sealants to comply with joint-sealant manufacturer's written instructions and the following requirements:
   1. Remove all foreign material from joint substrates that could interfere with adhesion of joint sealant, including dust, paints (except for permanent, protective coatings tested and approved for sealant adhesion and compatibility by sealant manufacturer), old joint sealants, oil, grease, waterproofing, water repellents, water, surface dirt, and frost.
   2. Clean porous joint substrate surfaces by brushing, grinding, blast cleaning, mechanical abrading, or a combination of these methods to produce a clean, sound substrate capable of developing optimum bond with joint sealants. Remove loose particles

remaining after cleaning operations above by vacuuming or blowing out joints with oil-free compressed air. Porous joint substrates include the following:
   a. Concrete.
   b. Masonry.
   c. Wood.
   d. Unglazed surfaces of ceramic tile.
3. Remove laitance and form-release agents from concrete.
4. Clean nonporous surfaces with chemical cleaners or other means that do not stain, harm substrates, or leave residues capable of interfering with adhesion of joint sealants. Nonporous joint substrates include the following:
   a. Metal.
   b. Glass.
   c. Porcelain enamel.
   d. Glazed surfaces of ceramic tile.

B. Joint Priming: Prime joint substrates, where recommended by joint-sealant manufacturer, based on preconstruction joint-sealant-substrate tests or prior experience. Apply primer to comply with joint-sealant manufacturer's written instructions. Confine primers to areas of joint-sealant bond; do not allow spillage or migration onto adjoining surfaces.

C. Masking Tape: Use masking tape where required to prevent contact of sealant with adjoining surfaces that otherwise would be permanently stained or damaged by such contact or by cleaning methods required to remove sealant smears. Remove tape immediately after tooling without disturbing joint seal.

3.3 INSTALLATION OF JOINT SEALANTS

A. General: Comply with joint-sealant manufacturer's written installation instructions for products and applications indicated, unless more stringent requirements apply.

B. Sealant Installation Standard: Comply with recommendations in ASTM C 1193 for use of joint sealants as applicable to materials, applications, and conditions indicated.

C. Install sealant backings of type indicated to support sealants during application and at position required to produce cross-sectional shapes and depths of installed sealants relative to joint widths that allow optimum sealant movement capability.
   1. Do not leave gaps between ends of sealant backings.
   2. Do not stretch, twist, puncture, or tear sealant backings.
   3. Remove absorbent sealant backings that have become wet before sealant application and replace them with dry materials.

D. Install bond-breaker tape behind sealants where sealant backings are not used between sealants and backs of joints.

E. Install sealants using proven techniques that comply with the following and at the same time backings are installed:
   1. Place sealants so they directly contact and fully wet joint substrates.
   2. Completely fill recesses in each joint configuration.
   3. Produce uniform, cross-sectional shapes and depths relative to joint widths that allow optimum sealant movement capability.

F. Tooling of Non-sag Sealants: Immediately after sealant application and before skinning or curing begins, tool sealants according to requirements specified below to form smooth, uniform beads of configuration indicated; to eliminate air pockets; and to ensure contact and adhesion of sealant with sides of joint.

1. Remove excess sealant from surfaces adjacent to joints.
2. Use tooling agents that are approved in writing by sealant manufacturer and that do not discolor sealants or adjacent surfaces.
3. Provide concave joint configuration per Figure 5A in ASTM C 1193, unless otherwise indicated.

3.4 FIELD QUALITY CONTROL

A. Field-Adhesion Testing: Perform field-adhesion testing in compliance with sealant manufacturer's requirements for warranty period indicated.
   1. Record test results in a field-adhesion-test log. Include dates when sealants were installed, names of persons who installed sealants, test dates, test locations, whether joints were primed, adhesion results and percent elongations, sealant fill, sealant configuration, and sealant dimensions.
   2. Repair sealants pulled from test area by applying new sealants following same procedures used originally to seal joints. Ensure that original sealant surfaces are clean and that new sealant contacts original sealant.

B. Evaluation of Field Test Results: Sealants not evidencing adhesive failure from testing or noncompliance with other indicated requirements will be considered satisfactory. Remove sealants that fail to adhere to joint substrates during testing or to comply with other requirements. Retest failed applications until test results prove sealants comply with indicated requirements.

3.5 CLEANING

A. Clean off excess sealant or sealant smears adjacent to joints as the Work progresses by methods and with cleaning materials approved in writing by manufacturers of joint sealants and of products in which joints occur.

3.6 PROTECTION

A. Protect joint sealants during and after curing period from contact with contaminating substances and from damage resulting from construction operations or other causes so sealants are without deterioration or damage at time of Substantial Completion. If, despite such protection, damage or deterioration occurs, cut out and remove damaged or deteriorated joint sealants immediately so installations with repaired areas are indistinguishable from original work.

3.7 JOINT-SEALANT SCHEDULE

A. Multicomponent, Non-sag Urethane Sealant: ASTM C 920, Type M, Grade NS, Class 25 or Class 50, for Use T, NT, and I.
   1. Applications: Exterior non-traffic joints, unless otherwise indicated.
   2. Products:
      a. Pecora Corporation; Dynatrol II.
      b. Sika Corporation; Sikaflex-2c NS.
      c. Sonneborn, Division of BASF; NP 2.
      d. Tremco; Dymeric 240.

B. Single-Component, Nonsag, Urethane Sealant: ASTM C 920, Type S, Grade NS, Class 25, for Use NT.
   1. Application: All interior non-rated, non-traffic joints, unless otherwise specified.
   2. Products:
      a. BASF Building Systems; Sonolastic NP 1.
      b. Pecora Corporation; Dynatrol I-XL.

c. Sika Corporation, Inc.; Sikaflex-1a.
d. Tremco Incorporated; Dymonic.

END OF SECTION 07 92 00

SECTION 08 03 14 - HISTORIC TREATMENT OF WOOD DOORS

PART 1 - GENERAL

1.1 SUMMARY

A. Section includes historic treatment of wood doors in the form of the following:
   1. Repairing wood doors and trim.
   2. Replacing wood door leaves and frames.
   3. Reglazing.
   4. Repairing, refinishing, and replacing hardware.
   5. Repairing storm doors and screen doors.
   6. Replacing storm-door and screen-door units.
   7. Providing new storm-door and screen-door units.

B. Related Requirements:
   1. Section 01 35 91 "Historic Treatment Procedures."

1.2 DEFINITIONS

A. Door: Generally, this term includes door frame, leaves, hardware, side panels or lights, fan light, transom, storm and screen doors, and storm vestibule unless otherwise indicated by context.

B. Glazing: Includes glass, glazing points, glazing tapes, glazing sealants, and glazing compounds.

C. Storm Vestibule: Removable winter enclosure erected on a covered porch, which includes side panels or lights and door leaf and may include top panels.

D. Wood Door Component Terminology: Wood door components for historic treatment work include the following classifications:
   1. Frame Components: Head, jambs, stop, and threshold or sill.
   2. Leaf Components: Stiles, rails, and muntins.
   3. Exterior Trim: Exterior casing, brick mold, and cornice or drip cap.
   4. Interior Trim: Casing.

1.3 PREINSTALLATION MEETINGS

A. Pre-installation Conference: Conduct conference at Project site.
   1. Review minutes of Preliminary Historic Treatment Conference that pertain to historic treatment of wood doors.
   2. Review methods and procedures related to historic treatment of wood doors including, but not limited to, the following:
      a. Historic treatment specialist's personnel, equipment, and facilities needed to make progress and avoid delays.
      b. Materials, material application, sequencing, tolerances, and required clearances.
      c. Fire-protection plan.
      d. Wood door historic treatment program.
      e. Coordination with building occupants.

1.4 SEQUENCING AND SCHEDULING

A. Perform historic treatment of wood doors in the following sequence, which includes work specified in this and other Sections:

1. Label each door frame with permanent opening-identification number in inconspicuous location.
2. Tag existing door leaves, storm doors, and storm-vestibule panels with opening-identification numbers and remove for on-site or off-site repair. Indicate on tags the locations on door of each component, such as "left-hand door leaf," "right-hand reverse door leaf," "top Dutch-door leaf," "bottom Dutch-door leaf," "first left-side storm-vestibule panel," and "second left-side storm-vestibule panel."
3. Remove door, dismantle hardware, and tag hardware with door opening-identification numbers.
4. In the shop, label each leaf, storm door, storm-vestibule panel, and screen-door unit with permanent opening-identification number in inconspicuous location and remove site-applied tags.
5. Install temporary protection and security at door openings.
6. Sort units by condition, separating those that need extensive repair.
7. Clean surfaces.
8. General Wood-Repair Sequence:
    a. Remove paint to bare wood.
    b. Rack frames slightly to inject adhesive into mortise and tenon joints; square frames to proper fit before adhesive sets.
    c. If glass thicker than original is required, rout existing muntins to required rebate size.
    d. Repair wood by consolidation, member replacement, partial member replacement, and patching.
    e. Sand, prime, fill, sand again, and prime surfaces again for refinishing.
9. Repair, refinish, and replace hardware if required. Reinstall operating hardware.
10. Install glazing.
11. Remove temporary protection and security at door openings.
12. Reinstall units.
13. Apply finish coats.
14. Install remaining hardware and weather stripping.

1.5 ACTION SUBMITTALS

A. Product Data: For each type of product.
    1. Include recommendations for product application and use. Include test data substantiating that products comply with requirements.

B. Shop Drawings: For locations and extent of wood-door repair and replacement work.
    1. Include plans, elevations, sections, and details of replacement parts indicating materials, profiles, joinery, reinforcing, method of splicing into or attaching to existing wood door, accessory items, and finishes.
    2. Include field-verified dimensions and the following:
        a. Full-size shapes and profiles with complete dimensions for replacement components and their jointing, showing relation of existing to new components.
        b. Templates and directions for installing hardware and anchorages.
        c. Identification of each new unit and its corresponding door locations in the building on annotated plans and elevations.
        d. Provisions for sealant joints and flashing as required for location.

C. Samples for Initial Selection: For each type of exposed wood and finish.
    1. Identify wood species, cut, and other features.
    2. Include Samples of hardware and accessories involving color selection.

D. Samples for Verification: For the following products in manufacturer's standard sizes unless otherwise indicated, finished as required for use in the Work:

1. Replacement Units: 12-inch-long, full-size frame and leaf sections with applied finish.
2. Replacement Members: 12 inches long for each replacement member, including parts of frame, leaf, exterior trim, and interior trim.
   a. Additional Samples of replacement members that show fabrication techniques, materials, and finishes as requested by Architect.
3. Repaired Wood Door Members: Prepare Samples using existing wood door members removed from site, repaired, and prepared for refinishing.
4. Refinished Wood Door Members: Prepare Samples using existing wood door members removed from site, repaired, and refinished.
5. Hardware: Full-size units with each factory-applied or restored finish.
6. Weather Stripping: 12-inch-long sections.
7. Glass: Full-size units of each type and appearance.

1.6 INFORMATIONAL SUBMITTALS

A. Wood Door Historic Treatment Program: Submit before work begins.

1.7 QUALITY ASSURANCE

A. Wood-Repair-Material Manufacturer Qualifications: A firm regularly engaged in producing **wood** consolidant and wood-patching compound that have been used for similar historic wood-treatment applications with successful results, and with factory-authorized service representatives who are available for consultation and Project-site inspection and on-site assistance.

B. Wood Door Historic Treatment Program: Prepare a written, detailed description of materials, methods, equipment, and sequence of operations to be used for historic treatment work, including protection of surrounding materials and Project site.
   1. If materials and methods other than those indicated are proposed for any phase of historic treatment work, add a written description of such materials and methods, including evidence of successful use on comparable projects, and demonstrations to show their effectiveness for this Project.

C. Mockups: Prepare mockups of historic treatment repair processes to demonstrate aesthetic effects and to set quality standards for materials and execution and for fabrication and installation. Prepare mockups so they are as inconspicuous as practicable.
   1. Locate mockups in locations that enable viewing under same conditions as the completed Work.
   2. Wood Door Repair: Prepare one entire door unit to serve as mockup to demonstrate Samples of each type of repair of wood door members including frame, leaves, glazing, and hardware.
   3. Approval of mockups does not constitute approval of deviations from the Contract Documents contained in mockups unless Architect specifically approves such deviations in writing.
   4. Subject to compliance with requirements, approved mockups may become part of the completed Work if undisturbed at time of Substantial Completion.

1.8 DELIVERY, STORAGE, AND HANDLING

A. Pack, deliver, and store products in suitable packs, heavy-duty cartons, or wooden crates; surround with sufficient packing material to ensure that products will not be deformed, broken, or otherwise damaged.

B. Store products inside a well-ventilated area, protected from weather, moisture, soiling, abrasion, extreme temperatures, and humidity, and where environmental conditions comply with manufacturer's requirements.

1.9 FIELD CONDITIONS

A. Weather Limitations: Proceed with historic treatment of wood doors only when existing and forecasted weather conditions are within the environmental limits set by each manufacturer's written instructions and specified requirements.

PART 2 - PRODUCTS

2.1 HISTORIC TREATMENT OF WOOD DOORS, GENERAL

A. Quality Standard: Comply with applicable requirements in Section 12, "Historic Restoration Work," and related requirements in AWI/AWMAC/WI's "Architectural Woodwork Standards" for construction, finishes, grades of wood doors, and other requirements unless otherwise indicated.
   1. Exception: Industry practices cited in the "Architectural Woodwork Standards," Section 12, Article 1.5, "Industry Practices," do not apply to the work of this Section.

2.2 REPLICATED WOOD DOOR UNITS

A. Replicated Wood Door Frames and Leaves: Custom-fabricated replacement wood units and trim, with operating and latching hardware.
   1. Joint Construction: Joints matching existing.
   2. Wood Species: Match wood species of existing exterior door and frame parts.
   3. Wood Cut: Match cut of existing exterior wood door and frame parts.
   4. Wood Member and Trim Profiles: Match profiles and detail of existing door members and trim.
   5. Hardware: Reuse existing unless otherwise indicated.
   6. Glazing Stops: Provide replacement glazing stops coordinated with glazing system indicated.
   7. Weather Stripping: Full-perimeter weather stripping for each exterior door leaf.
   8. Date Identification: Emboss on a concealed surface of each replaced door frame and leaf, in easily read characters, "DOOR FRAME MADE <Insert year>" or "DOOR LEAF MADE <Insert year>." Manufacturer's name may also be embossed.

2.3 STORM DOORS

A. General: Custom fabricated, tight fitting, replicating appearance of existing storm door, and with operating and latching hardware.
   1. Make storm doors removable for cleaning and storage.
   2. Interchangeable Storm and Screen Inserts: Equip storm-door leaf with **full height or** partial height panels fitting into stile-and-rail construction of storm door and secured with six or eight thumb-operable clips on storm-door to secure panels in door leaf. Storm insert shall be fully glazed with subdivided lights and screen insert fully screened.
   3. Joint Construction: Joints matching existing.
   4. Wood Species: Match wood species of primary door and frame parts.
   5. Wood Cut: Match cut of existing exterior wood door and frame parts.
   6. Wood Member Profiles: Match wood profiles of existing storm door] [As indicated on Drawings.
   7. Hardware: Reuse existing unless otherwise indicated.
   8. Glazing Material: Uncoated clear safety glass.

9. Date Identification: Emboss on a concealed surface of each storm door, in easily read characters, "STORM DOOR MADE <Insert year>." Manufacturer's name may also be embossed.

2.4 WOOD-REPLACEMENT MATERIALS

A. Wood, General: Clear fine-grained lumber; kiln dried to a moisture content of 6 to 12 percent at time of fabrication; free of visible finger joints, blue stain, knots, pitch pockets, and surface checks larger than 1/32 inch deep by 2 inches wide.
   1. Species: Ponderosa pine, or match species of each existing type of wood component or assembly, unless otherwise indicated.

B. Frame Heads and Jambs and Exterior Trim: Match existing species.

C. Exterior Trim: Match existing species.

D. Thresholds or Sills: African mahogany or Western red cedar.

E. Leaf Components: Match existing species.

F. Interior Trim: Match existing species.

2.5 WOOD-REPAIR MATERIALS

A. Source Limitations: Obtain wood consolidant and wood-patching compound from single source from single manufacturer.

B. Wood Consolidant: Ready-to-use product designed to penetrate, consolidate, and strengthen soft fibers of wood materials that have deteriorated because of weathering and decay and designed specifically to enhance the bond of wood-patching compound to existing wood. Subject to compliance with requirements, incorporate products from one of the following manufacturers:
   1. Abatron, Inc., Kenosha, WI.
   2. ConServ Epoxy LLC, Northford CT.
   3. Gougeon Brothers, Inc., Bay City, MI.
   4. Protective Coating Company, Allentown, PA.
   5. System Three Resins, Inc., Auburn, WA.

C. Wood-Patching Compound: Two-part epoxy-resin wood-patching compound; knife-grade formulation as recommended in writing by manufacturer for type of wood repair indicated, tooling time required for the detail of work, and site conditions. Compound shall be designed for filling voids in damaged wood materials that have deteriorated because of weathering and decay. Compound shall be capable of filling deep holes and spreading to feather edge. Subject to compliance with requirements, incorporate products from one of the following manufacturers:
   1. Abatron, Inc., Kenosha, WI.
   2. Advanced Repair Technology, Inc., Cherry Valley, NY.
   3. ConServ Epoxy LLC, Northford CT.
   4. Gougeon Brothers, Inc., Bay City, MI.
   5. Polymeric Systems, Inc., Elverson, PA.
   6. Protective Coating Company, Allentown, PA.
   7. System Three Resins, Inc., Auburn, WA.

2.6 GLAZING MATERIALS

A. Glass: Uncoated clear safety glass.

B. Glazing Systems:
   1. Modern Glazing Products: Glazing points and single-component polyurethane glazing compound; ASTM C 920, Type S, Grade NS, Class 25, Use G; struck uniformly to match taper of existing glazing putty (removed); colored as required to match painted sash.
   2. Primers and Cleaners for Glazing: As recommended in writing by glazing material manufacturer.

2.7 HARDWARE

A. Primary Door Hardware, General: Provide complete sets of door hardware consisting of hinges, pulls, locks, latches, and accessories indicated for each door or required for proper operation. Sets shall include replacement hardware to complement repaired and refinished, existing hardware. Door hardware shall smoothly operate, tightly close, and securely lock wood doors and be sized to accommodate frequency of use, glazing weight, and dimensions.

B. Other Hardware, General: Provide complete sets of hardware for each type of storm door consisting of hinges, pulls, latches, fasteners, clips, and accessories indicated or required for proper operation. Hardware shall smoothly operate, tightly close, and secure units appropriately for frequency of use, unit weight, and dimensions.

C. Replacement Hardware: Replace existing damaged or missing hardware with new hardware.

D. Material and Design:
   1. Material: Solid bronze of alloy indicated, or nonmagnetic stainless steel, unless otherwise indicated.
   2. Design: Match type and appearance of existing hardware.
   3. Replacement Door Hardware: Regardless of mechanisms within, match existing, exposed door hardware of the following types:
      a. Door knobs, levers, and escutcheons.
      b. Door latches.
      c. Surface-mounted flush bolts.
      d. Handles.
      e. Projecting transom hinges and latch with pole ring.

E. Hardware Finishes: Comply with BHMA A156.18 for base material and finish requirements indicated by the following:
   1. BHMA 613: Dark-oxidized satin bronze, oil rubbed, bronze base metal.

2.8 WEATHER STRIPPING

A. Compression-Type Weather Stripping: Compressible weather stripping designed for permanently resilient sealing under bumper or wiper action; completely concealed when door is closed.
   1. Weather-Stripping Material: Match existing materials and profiles as much as possible unless otherwise indicated.
      a. Cellular Elastomeric Gaskets: Preformed; complying with ASTM C 509.
      b. Dense Elastomeric Gaskets: Preformed; complying with ASTM C 864.

2.9 MISCELLANEOUS MATERIALS

A. Insect Screening:
   1. Aluminum Wire Fabric: 18-by-16 count per sq. in. mesh of 0.011-inch-diameter, coated aluminum wire; charcoal gray finish.

B. Borate Preservative Treatment: Inorganic, borate-based solution, with disodium octaborate tetrahydrate ($Na_2B_8O_{13}.4H_2O$) as the primary ingredient; manufactured for preserving weathered and decayed wood from further damage by decay fungi and wood-boring insects; complying with AWPA P5; containing no boric acid.

C. Cleaning Materials:
   1. Detergent Solution: Solution prepared by mixing 2 cups of tetrasodium pyrophosphate ($Na_4O_7P_2$) (TSPP), 1/2 cup of laundry detergent that contains no ammonia, 5 quarts of 5 percent sodium hypochlorite bleach, and 15 quarts of warm water for each 5 gal. of solution required.
   2. Mildewcide: Commercial, proprietary mildewcide or a solution prepared by mixing 1/3 cup of household detergent that contains no ammonia, 1 quart of 5 percent sodium hypochlorite bleach, and 3 quarts of warm water.

D. Adhesives: Wood adhesives with minimum 15- to 45-minute cure at 70° F, in gunnable and liquid formulations as recommended in writing by adhesive manufacturer for each type of repair and exposure conditions.

E. Fasteners: Use fastener metals that are noncorrosive and compatible with each material joined.
   1. Match existing fasteners in material and type of fastener unless otherwise indicated.
   2. Use concealed fasteners for interconnecting wood components.
   3. Use concealed fasteners for attaching items to other work unless exposed fasteners are unavoidable or the existing fastening method.
   4. For fastening metals, use fasteners of same basic metal as fastened metal unless otherwise indicated.
   5. For exposed fasteners, use Phillips-type machine screws of head profile flush with metal surface unless otherwise indicated.
   6. Finish exposed fasteners to match finish of metal fastened unless otherwise indicated.

F. Anchors, Clips, and Accessories: Fabricate anchors, clips, and door accessories of aluminum, nonmagnetic stainless steel, or hot-dip zinc-coated steel complying with requirements in ASTM B 633 for SC 3 (Severe) service condition.

2.10 WOOD DOOR FINISHES

A. Unfinished Replacement Units: Provide exposed exterior and interior wood surfaces of replacement units unfinished; smooth, filled, and suitably prepared for on-site priming and finishing.

PART 3 - EXECUTION

3.1 PREPARATION

A. Protect adjacent materials from damage by historic treatment of wood doors.

B. Clean wood doors of mildew, algae, moss, plant material, loose paint, grease, dirt, and other debris by scrubbing with bristle brush or sponge and detergent solution. Scrub mildewed areas with mildewcide. After cleaning, rinse thoroughly with fresh water. Allow to dry before repairing or painting.

C. Condition replacement wood members and replacement units to prevailing conditions at installation areas before installing.

3.2 HISTORIC TREATMENT OF WOOD DOORS, GENERAL

A. Historic Treatment Appearance Standard: Completed work is to have a uniform appearance as viewed by Architect from the door interior at 5 feet away and from the door exterior at 20 feet away.

B. General: In treating historic items, disturb them as minimally as possible and as follows:
   1. Stabilize and repair wood doors to reestablish structural integrity and weather resistance while maintaining the existing form of each item.
   2. Remove coatings and apply borate preservative treatment before repair. Remove coatings according to Section 09 03 91 "Historic Treatment of Plain Painting" unless otherwise indicated.
   3. Repair items in place where possible.
   4. Install temporary protective measures to protect wood door work that is indicated to be completed later.
   5. Refinish historic wood windows according to Section 09 03 91 "Historic Treatment of Plain Painting" unless otherwise indicated.

C. Mechanical Abrasion: Where mechanical abrasion is needed for the work, use only the gentlest mechanical methods, such as scraping and natural-fiber bristle brushing, that will not abrade wood substrate, reducing clarity of detail. Do not use abrasive methods such as sanding, wire brushing, or power tools except as indicated as part of the historic treatment program and as approved by Architect.

D. Repair and Refinish Existing Hardware: Dismantle door hardware; strip paint, repair, and refinish it to match finish Samples; and lubricate moving parts just enough to function smoothly.

E. Repair Wood Doors: Match existing materials and features, retaining as much original material as possible to perform repairs.
   1. Unless otherwise indicated, repair wood doors by consolidating, patching, splicing, or otherwise reinforcing wood with new wood matching existing wood or with salvaged, sound, original wood.
   2. Where indicated, repair wood doors by limited replacement matching existing material.

F. Replace Wood Units: Where indicated, duplicate and replace units with units made from salvaged, sound, original wood or with new wood matching existing wood. Use surviving prototypes to create patterns for duplicate replacements.
   1. Compatible substitute materials may be used.

G. Protection of Openings: Where doors are indicated for removal, cover resultant openings with temporary enclosures so that openings are weathertight during repair period.

H. Identify removed doors, frames, leaves, and members with numbering system corresponding to door locations to ensure reinstallation in same location. Key doors, leaves, and members to Drawings showing location of each removed unit. Permanently label units in a location that will be concealed after reinstallation.

3.3 WOOD DOOR PATCH-TYPE REPAIR

A. General: Patch wood members that exhibit depressions, holes, or similar voids and that have limited amounts of rotted or decayed wood.
   1. Remove leaves, storm doors, and screen doors from door frames before performing patch-type repairs at meeting or sliding surfaces unless otherwise indicated. Reglaze units prior to reinstallation.
   2. Verify that surfaces are sufficiently clean and free of paint residue before patching.

3. Treat wood members with wood consolidant before applying patching compound. Coat wood surfaces by brushing, applying multiple coats until wood is saturated and unable to absorb more. Allow treatment to harden before filling void with patching compound.

B. Apply borate preservative treatment to accessible surfaces either before applying wood consolidant or after removing rotted or decayed wood. Apply treatment liberally by brush to joints, edges, and ends; top, sides, and bottom. Allow treatment to dry.

C. Apply wood-patching compound to fill depressions, nicks, cracks, and other voids created by removed or missing wood.
   1. Prime patch area with application of wood consolidant or manufacturer's recommended primer.
   2. Mix only as much patching compound as can be applied in accordance with manufacturer's written instructions.
   3. Apply patching compound in layers as recommended in writing by manufacturer until the void is completely filled.
   4. Sand patch surface smooth and flush with adjacent wood, without voids in patch material, and matching contour of wood member.
   5. Clean spilled compound from adjacent materials immediately.

3.4 WOOD DOOR MEMBER-REPLACEMENT REPAIR

A. General: Replace parts of or entire wood door members at locations [indicated on Drawings] [indicated in the Historic Wood Door Schedule] [and] [where damage is too extensive to patch] <Insert requirement>.
   1. Remove leaves, storm doors, and screen doors from door frames before performing member-replacement repairs unless otherwise indicated.
   2. Verify that surfaces are sufficiently clean and free of paint residue before repair.
   3. Remove broken, rotted, and decayed wood down to sound wood.
   4. Custom fabricate new wood to replace missing wood; either replace entire wood member or splice new wood part into existing member.
   5. Secure new wood using finger joints, multiple dowels, or splines with adhesive and nailing to ensure maximum structural integrity at each splice. Use only concealed fasteners. Fill nail holes and patch surface to match surrounding sound wood.

B. Apply borate preservative treatment to accessible surfaces after replacements are made. Apply treatment liberally by brush to joints, edges, and ends; top, sides, and bottom.

C. Repair remaining depressions, holes, or similar voids with patch-type repairs.

D. Clean spilled materials from adjacent surfaces immediately.

E. Glazing: Reglaze units before reinstallation.
   1. Provide replacement glazing stops coordinated with glazing system indicated.
   2. Provide glazing stops to match contour of door frames.

F. Reinstall units removed for repair into original openings.

G. Weather Stripping: Replace nonfunctioning and install missing weather stripping to ensure full-perimeter weather stripping for each exterior leaf.

3.5 GLAZING

A. Comply with combined written instructions of manufacturers of glass, glazing system, and glazing materials, unless more stringent requirements are indicated.

B. Remove cracked and damaged glass and glazing materials from openings and prepare surfaces for re-glazing.

C. Size glass as required by Project conditions to provide necessary bite on glass, minimum edge and face clearances, with reasonable tolerances.

D. Apply primers to joint surfaces where required for adhesion of glazing system, as determined by preconstruction testing.

E. Install setting bead, side beads, and back bead against stop in glazing rabbets before setting glass.

F. Install glass with proper orientation so that coatings, if any, face exterior or interior as required.

G. Install glazing points.

H. Disposal of Removed Glass: Remove from Owner's property and legally dispose of it unless otherwise indicated.

3.6 WOOD DOOR UNIT REPLACEMENT

A. General: Replace existing wood door frame, leaf, storm door, and screen door units with new custom-fabricated units to match existing at locations [indicated on Drawings and where damage is too extensive to repair.

B. Apply borate preservative treatment to accessible surfaces before finishing. Apply treatment liberally by brush to joints, edges, and ends; top, sides, and bottom.

C. Mill glazed members to accommodate glass thickness. Glaze units before installation.

D. Install units, hardware, weather stripping, accessories, and other components as indicated on Drawings.

E. Install units level, plumb, square, true to line, without distortion or impeding movement, anchored securely in place to structural support, and in proper relation to wall flashing, trim, and other adjacent construction.

F. Set threshold or sill members in bed of sealant for weathertight construction unless otherwise indicated.

G. Install door units with new anchors into existing openings.

H. Weather Stripping: Install full-perimeter weather stripping for each operable exterior leaf.

I. Metal Protection: Separate aluminum and other corrodible surfaces from sources of corrosion or electrolytic action at points of contact with other materials.

J. Disposal of Removed Units: Remove from Owner's property and legally dispose of them.

3.7 STORM DOOR INSTALLATION

A. Fit wood storm doors at each door jamb indicated. Verify that storm door and door frames are correctly tagged with opening-identification numbers.

B. Adjust hardware, clips, and removable fasteners for a tight fit with uniform joints. Uninstall and reinstall door at least once to ensure proper fit.

C. Install and leave storm doors in place when directed by Architect to suit the season.

D. Install units by mounting to door frames according to manufacturer's written instructions.

3.8 WEATHER STRIPPING INSTALLATION

A. Install weather stripping for tight seal of joints as demonstrated in mockup.

3.9 ADJUSTING

A. Adjust existing and replacement operating leaves, screens, hardware, weather stripping, and accessories for a tight fit at contact points and weather stripping for smooth operation and weathertight closure. Lubricate hardware and moving parts.

3.10 CLEANING AND PROTECTION

A. Protect door surfaces from contact with contaminating substances resulting from construction operations. Monitor door surfaces adjacent to and below exterior concrete and masonry during construction for presence of dirt, scum, alkaline deposits, stains, or other contaminants. If contaminating substances contact door surfaces, remove contaminants immediately.

B. Clean exposed surfaces immediately after historic treatment of wood doors. Avoid damage to coatings and finishes. Remove excess sealants, glazing and patching materials, dirt, and other substances.

C. Remove and replace glass that has been broken, chipped, cracked, abraded, or damaged during construction period.

3.11 REPAIR SCOPE SCHEDULE

A. Level 1 Repairs: minor repairs.
   1. Scope includes the repair of existing wood doors, windows, transoms, sidelights, frames and panels at exterior side.
   2. Remove peeling paint down to sound wood or paint. Sound paint may remain.
   3. Replace failed or missing glazing putty.
   4. Prime and paint.
   5. Doors and window do not need to be made fully operational, but should be made weather tight.

B. Level 2 Repairs: medium repairs.
   1. Scope includes repairs to existing historic wood door and frame (including transom, if any).
   2. Remove existing paints, coatings, and finishes.
   3. Remove hardware from door and frame scheduled or shown to be replaced.
   4. Service existing hardware scheduled to remain for smooth and proper operation, included repairs and replace of parts as necessary within the hardware.
   5. Provide new hardware as specified.
   6. Fill in gouges and holes with wood patching compound.
   7. Replace up to 10% of surface veneer.
   8. Replace up to 10% of damaged or missing trim with profiles to match existing.
   9. Replace bottom 2” of door with new wood to match existing.
   10. Reattach loose trim.

11. Adjust door and frame for smooth operation.
12. Prep and paint door and frame (interior and exterior) or provide varnish over stain.
13. Existing glass to remain unless otherwise noted.
14. Provide insulated tempered glass where noted.

C. Level 3 Repairs: major repairs.
1. Scope includes repairs to existing historic wood door and frame (including transom, if any). Remove existing paints and coatings (interior and exterior).
2. Remove door from frame for repairs in the shop, and provide temporary door for security and weather protection.
3. Remove all hardware from door and frame. Salvage historic hardware for reinstallation or deliver to owner.
4. Provide new door hardware as specified.
5. Fill in former hardware locations with new wood in preparation for new or salvaged door hardware installation.
6. Fill in all gouges with wood patching compound.
7. Replace up to 20% of surface veneer.
8. Replace up to 20% of damaged or missing trim with profiles to match existing.
9. Replace bottom 2” of door with new wood to match existing.
10. Reattach loose trim.
11. Treat dry weathered wood in preparation for painting with preservative treatment.
12. Fill significant cracks and checks with wood consolidant and wood patching compound.
13. Reinstall door in opening.
14. Adjust door and frame for smooth operation.
15. Prep and paint door and frame (interior and exterior).
16. Replace glass in door (if any) with new clear tempered glass; provide insulated tempered glass where noted.

END OF SECTION 08 03 14

SECTION 08 03 52 - HISTORIC TREATMENT OF WOOD WINDOWS

PART 1 - GENERAL

1.1 SUMMARY

A. Section includes historic treatment of wood windows in the form of the following:
   1. Repairing wood windows and trim.
   2. Replacing wood window frames and sash units.
   3. Reglazing (includes glass, see definitions).
   4. Repairing, refinishing, and replacing hardware.
   5. Repairing storm windows and insect screens.
   6. Replacing storm-windows and insect-screen units.
   7. Providing new storm-window and insect-screen units.

B. Related Requirements:
   1. Section 01 35 91 "Historic Treatment Procedures" for general historic treatment requirements.
   2. Section 02 42 96 "Historic Removal and Dismantling" for historic removal and dismantling work.
   3. Section 06 40 13 "Exterior Architectural Woodwork" for new wood shutters not included in this Section.
   4. Section 08 52 00 "Wood Windows" for replacement wood windows or new replacement sash not included in this Section.

1.2 DEFINITIONS

A. Glazing: Includes glass, glazing points, glazing tapes, glazing sealants, and glazing compounds.

B. Window: Includes window frame, sash, hardware, storm window, and exterior and interior shutters unless otherwise indicated by context.

C. Wood Window Component Terminology: Wood window components for historic treatment work include the following classifications:
   1. Frame Components: Head, jambs, and sill.
   2. Sash Components: Stiles and rails, parting bead, stop, and muntins.
   3. Exterior Trim: Exterior casing, brick mold, and cornice or drip cap.
   4. Interior Trim: Casing, stool, and apron.

1.3 PREINSTALLATION MEETINGS

A. Preinstallation Conference: Conduct conference at Project site.
   1. Review methods and procedures related to historic treatment of wood windows including, but not limited to, the following:
      a. Historic treatment specialist's personnel, equipment, and facilities needed to make progress and avoid delays.
      b. Materials, material application, sequencing, tolerances, and required clearances.
      c. Fire-protection plan.
      d. Wood window historic treatment program.
      e. Coordination with building occupants.

1.4 SEQUENCING AND SCHEDULING

A. Perform historic treatment of wood windows in the following sequence, which includes work specified in this and other Sections:
   1. Label each window frame with permanent opening-identification number in inconspicuous location.
   2. Tag existing window sash, storm windows, and shutters with opening-identification numbers and remove for on-site or off-site repair. Indicate on tags the locations on window of each component, such as "top sash," "bottom sash," "left shutter," and "right shutter."
   3. Remove window, dismantle hardware, and tag hardware with opening-identification numbers.
   4. Install temporary protection and security at window openings.
   5. In the shop, label each sash and storm window with permanent opening-identification number in inconspicuous location and remove site-applied tags.
   6. Sort units by condition, separating those that need extensive repair.
   7. Clean surfaces.
   8. General Wood-Repair Sequence:
      a. Remove paint to bare wood.
      b. Rack frames slightly to inject adhesive into mortise and tenon joints; square frames to proper fit before adhesive sets.
      c. If thicker than original glass is required, rout existing muntins to required rebate size.
      d. Repair wood by consolidation, member replacement, partial member replacement, and patching.
      e. Sand, prime, fill, sand again, and prime surfaces again for refinishing.
   9. Repair, refinish, and replace hardware if required. Reinstall operating hardware.
   10. Install glazing.
   11. Remove temporary protection and security at window openings.
   12. Reinstall units.
   13. Apply finish coats.
   14. Install remaining hardware and weather stripping.

1.5 ACTION SUBMITTALS

A. Product Data: For each type of product.
   1. Include recommendations for product application and use. Include test data substantiating that products comply with requirements.

B. Shop Drawings:
   1. Include plans, elevations, and sections showing locations and extent of repair and replacement work, with enlarged details of replacement parts indicating materials, profiles, joinery, reinforcing, method of splicing into or attaching to existing wood window, accessory items, and finishes.
   2. Include field-verified dimensions and the following:
      a. Full-size shapes and profiles with complete dimensions for replacement components and their jointing, showing relation of existing to new components.
      b. Templates and directions for installing hardware and anchorages.
      c. Identification of each new unit and its corresponding window locations in the building on annotated plans and elevations.
      d. Provisions for sealant joints and flashing as required for location.

C. Samples for Initial Selection: For each type of exposed wood and finish.
   1. Identify wood species, cut, and other features.
   2. Include Samples of hardware and accessories involving color selection.
   3. Replacement Units: 12-inch- (300-mm-) long, full-size frame and sash sections with applied finish.

4. Replacement Members: 12 inches (300 mm) long for each replacement member, including parts of frame, sash, exterior trim, and interior trim.
   a. Additional Samples of replacement members that show fabrication techniques, materials, and finishes as requested by Architect.
5. Repaired Wood Window Members: Prepare Samples using existing wood window members removed from site, repaired, and prepared for refinishing.
6. Refinished Wood Window Members: Prepare Samples using existing wood window members removed from site, repaired, and refinished.
7. Hardware: Full-size units with each factory-applied or restored finish.
8. Weather Stripping: 12-inch- (300-mm-) long sections.
9. Glass: 12-inch- square units of each type and appearance.

1.6 QUALITY ASSURANCE

A. Wood-Repair-Material Manufacturer Qualifications: A firm regularly engaged in producing wood consolidant and wood-patching compound that have been used for similar historic wood-treatment applications with successful results, and with factory-authorized service representatives who are available for consultation and Project-site inspection and on-site assistance.

B. Wood Window Historic Treatment Program: Prepare a written, detailed description of materials, methods, equipment, and sequence of operations to be used for historic treatment work, including protection of surrounding materials and Project site.
   1. If materials and methods other than those indicated are proposed for any phase of historic treatment work, add a written description of such materials and methods, including evidence of successful use on comparable projects, and demonstrations to show their effectiveness for this Project.

1.7 DELIVERY, STORAGE, AND HANDLING

A. Pack, deliver, and store products in suitable packs, heavy-duty cartons, or wooden crates; surround with sufficient packing material to ensure that products are not deformed, broken, or otherwise damaged.

B. Store products inside a well-ventilated area and protect from weather, moisture, soiling, abrasion, extreme temperatures, and humidity, and where environmental conditions comply with manufacturer's requirements.

1.8 FIELD CONDITIONS

A. Weather Limitations: Proceed with historic treatment of wood windows only when existing and forecasted weather conditions are within the environmental limits set by each manufacturer's written instructions and specified requirements.

B. Lead-Based Paint: Lead-based paint may be present on interior and exterior painted surfaces of the buildings. Renovation activities may result in exposure to lead. Perform lead-based paint removal and abatement and all renovation work affected by the presence of lead-based paint in compliance with state and Federal Occupational Safety and Health Administration (OSHA) requirements.
   1. No lead-based paint abatement program will be performed by the Owner.
   2. Sanding, stripping and refinishing operations on surfaces containing lead paint shall be performed in accordance with all regulatory rules and standards, including OSHA's Lead Standard for the Construction Industry (29 CFR 1926.62).
   3. Legal disposal of lead-based paint waste is the responsibility of the contractor.

4. Reference the U.S. Department of the Interior, National Park Service Preservation Briefs #37 Appropriate Methods for Reducing Lead-Paint Hazards in Historic Housing at http://www.nps.gov/hps/tps/briefs/brief37.htm.

C. Contractor shall assume existing paints and coatings contain lead-based paint. If contractor testing reveals existing paints and coatings are not lead-based, the Owner may issue a Change Order to reduce costs of removal, disposal, and other associated costs.

PART 2 - PRODUCTS

2.1 HISTORIC TREATMENT OF WOOD WINDOWS, GENERAL

A. Quality Standard: Comply with applicable requirements in Section 12, "Historic Restoration Work," and related requirements in AWI/AWMAC/WI's "Architectural Woodwork Standards" for construction, finishes, grades of wood windows, and other requirements unless otherwise indicated.
   1. Exception: Industry practices cited in Section 12, Article 1.5, Industry Practices, of the Architectural Woodwork Standards do not apply to the work of this Section.

2.2 STORM WINDOWS

A. General: Custom fabricated, tight fitting, replicating appearance of existing storm windows where indicated, and with operating and latching hardware.
   1. Fabricate storm windows for installation on outside of primary window.
   2. Fabricate storm window frame and sash so as not to be visible from the interior. (Example: align the meeting rails of the sash with the meeting rails of the primary window).
   3. Make storm windows removable for cleaning and storage.

B. Manufacturers: Subject to compliance with requirements, available manufacturers offering products that may be incorporated into the Work include, but are not limited to, the following:
   1. Adams Architectural Millwork, Dubuque, IA.
   2. Allied Window, Inc., Cincinnati, OH.
   3. Cleary and Son, Inc., Waltham, MA.
   4. Indow Windows, Portland, OR.
   5. Innerglass Window Systems, Simsbury CT.
   6. Kingsland Architectural Millwork, Norfolk, CT.
   7. Smith Restoration Sash, Providence, RI.
   8. Weston Millwork Co., Weston, MO.
   9. Wewoka Window Works, Wewoka, OK.
   10. Wood Window Workshop, Utica, NY.
   11. Woodstone Co., North Walpole, NH.

C. Wood Storm Windows (Operable Self Storing):
   1. Basis of Design: Self-Storing Storm/Screen Window sash by Adams Architectural Millwork.
   2. Joint Construction: Mortise and tenon joints or Doweled joints.
   3. Wood Species: Sapele mahogany.
   4. Paint: factory prime painted, latex primer.
   5. Aluminum track, bronze anodized finish, set into the wood sash. Aluminum shall not be visible from the exterior face of the sash.
   6. Wood Storm-Window Members: standard profiles.
   7. Hardware: As required to secure storm window to window frames. Provide stainless steel hanger sets at top of sash, stainless steel turn-buttons at sides of sash.
   8. Glazing Material: uncoated clear float glass, double strength or annealed.

9. Screen Material: aluminum, charcoal color.
10. Date Identification: Emboss on a concealed surface of each storm window, in easily read characters, "STORM WINDOW MADE <Insert year>." Manufacturer's name may also be embossed.
11. At arch top window openings:
    a. Construct the top edge of the top rail to conform with the arch; construct the bottom edge of the top rail straight across to conform with the aluminum glass track.
12. At half round top, or rounded window top, window openings:
    a. Provide alternate type of sash, Basis of Design: Fixed-Top Combination Plus Storm/Screen Window by Adams Architectural Millwork. Top pane shall be glass. Bottom pane shall be removable glass set in aluminum channel. Also provide matching screen, set in aluminum channel, for the bottom pane.

2.3 WOOD-REPLACEMENT MATERIALS

A. Wood, General: Clear fine-grained lumber; kiln dried to a moisture content of 6 to 12 percent at time of fabrication; free of visible finger joints, blue stain, knots, pitch pockets, and surface checks larger than 1/32 inch (0.8 mm) deep by 2 inches (51 mm) wide.
   1. Species: Ponderosa pine, eastern white pine, or Idaho white pine, unless otherwise indicated.

B. Frame Heads and Jambs and Exterior Trim: Ponderosa pine, eastern white pine, or Idaho white pine.

C. Sills: White oak, or Western red cedar.

D. Sash Components: Ponderosa pine, eastern white pine, or Idaho white pine.

E. Interior Trim: Ponderosa pine, eastern white pine, or Idaho white pine.

2.4 WOOD-REPAIR MATERIALS

A. Source Limitations: Obtain wood consolidant and wood-patching compound from single source from single manufacturer.

B. Wood Consolidant: Ready-to-use product designed to penetrate, consolidate, and strengthen soft fibers of wood materials that have deteriorated due to weathering and decay and designed specifically to enhance the bond of wood-patching compound to existing wood. Subject to compliance with requirements, incorporate products from one of the following manufacturers:
   1. Abatron, Inc., Kenosha, WI.
   2. ConServ Epoxy LLC, Northford CT.
   3. Gougeon Brothers, Inc., Bay City, MI.
   4. Protective Coating Company, Allentown, PA.
   5. System Three Resins, Inc., Auburn, WA.

C. Wood-Patching Compound: Two-part epoxy-resin wood-patching compound; knife-grade formulation as recommended in writing by manufacturer for type of wood repair indicated, tooling time required for the detail of work, and site conditions. Compound shall be designed for filling voids in damaged wood materials that have deteriorated due to weathering and decay. Compound shall be capable of filling deep holes and spreading to feather edge. Subject to compliance with requirements, incorporate products from one of the following manufacturers:
   1. Abatron, Inc., Kenosha, WI.
   2. Advanced Repair Technology, Inc., Cherry Valley, NY.
   3. ConServ Epoxy LLC, Northford CT.

4. Gougeon Brothers, Inc., Bay City, MI.
5. Polymeric Systems, Inc., Elverson, PA.
6. Protective Coating Company, Allentown, PA.
7. System Three Resins, Inc., Auburn, WA.

2.5 GLAZING MATERIALS

A. Glass: Uncoated clear float-glass units according to Section 08 80 00 "Glazing."

B. Glazing Systems:
1. Traditional Glazing Products: Glazing points and oil-based glazing putty or latex glazing compound. Tint to required color according to manufacturer's written instructions. Subject to compliance with requirements, available manufacturers offering products that may be incorporated into the Work include, but are not limited to, the following:
   a. DAP Products, Inc., Baltimore, MD.
   b. Sarco Putty Co., Inc., Chicago, IL.
   c. UGL (United Gilsonite Laboratories), Scranton, PA.
2. Primers and Cleaners for Glazing: As recommended in writing by glazing material manufacturer.

2.6 HARDWARE

A. Window Hardware: Provide complete sets of window hardware consisting of sash balances, hinges, pulls, latches, and accessories indicated for each window or required for proper operation. Sets shall include replacement hardware to complement repaired and refinished, existing hardware. Window hardware shall smoothly operate, tightly close, and securely lock wood windows and be sized to accommodate sash or ventilator weight and dimensions.

B. Other Hardware: Provide complete sets of hardware for each type of storm window consisting of hinges, pulls, latches, and accessories indicated or required for proper operation. Hardware shall smoothly operate, tightly close, and secure units appropriately for unit weight and dimensions.

C. Replacement Hardware: Replace existing damaged or missing hardware with new hardware manufactured by one of the following:
1. Architectural Resource Center, Northwood, NH.
2. Ball and Ball, Exton, PA.
3. Blaine Windows Hardware, Inc., Hagerstown, MD.
4. Bronze Craft Corp., Nashua, NH.
5. Phelps Co., Brattleboro, VT.
6. Smith Restoration Sash, Providence, RI.

D. Material and Design:
1. Material: Solid bronze or brass alloy unless otherwise indicated.
2. Design: Match type and appearance of existing hardware.
3. Weight and Pulley Sash-Balance: Concealed weight and pulley balance system including steel or cast-iron weights, cast-bronze pulleys, synthetic sash cord; size and capacity to hold sash stationary at any open position.
4. Replacement Window Hardware: Match existing window hardware of the following types:
   a. Projected window hinge.
   b. Window lock.
   c. Window latch.
   d. Handle.

E. Hardware Finishes: Comply with BHMA A156.18 for base material and finish requirements indicated by the following:
   1. BHMA 613: Dark-oxidized satin bronze, oil-rubbed; bronze base metal.

2.7 WEATHER STRIPPING

A. Compression-Type Weather Stripping: Compressible weather stripping designed for permanently resilient sealing under bumper or wiper action; completely concealed when window is closed. Subject to compliance with requirements, available manufacturers offering products that may be incorporated into the Work include, but are not limited to, the following:
   1. National Guard Products, Inc., Memphis, TN.
   2. Pemko Manufacturing Co., Ventura, CA.
   3. Reese Enterprises, Inc., Rosemount, MN.
   4. Zero International, Inc., Bronx, NY.

B. Weather-Stripping Material: Match existing materials and profiles as much as possible unless otherwise indicated.
   1. Cellular Elastomeric Gaskets: Preformed; complying with ASTM C509.
   2. Dense Elastomeric Gaskets: Preformed; complying with ASTM C864.

2.8 MISCELLANEOUS MATERIALS

A. Borate Preservative Treatment: Inorganic, borate-based solution, with disodium octaborate tetrahydrate as the primary ingredient; manufactured for preserving weathered and decayed wood from further damage by decay fungi and wood-boring insects; complying with AWPA P5; containing no boric acid.

B. Cleaning Materials:
   1. Detergent Solution: Solution prepared by mixing 2 cups (0.5 L) of tetrasodium pyrophosphate (TSPP), 1/2 cup (125 mL) of laundry detergent that contains no ammonia, 5 quarts (5 L) of 5 percent sodium hypochlorite bleach, and 15 quarts (15 L) of warm water for each 5 gal. (20 L) of solution required.
   2. Mildewcide: Commercial, proprietary mildewcide or a solution prepared by mixing 1/3 cup (80 mL) of household detergent that contains no ammonia, 1 quart (1 L) of 5 percent sodium hypochlorite bleach, and 3 quarts (3 L) of warm water.

C. Adhesives: Wood adhesives for exterior exposure, with minimum 15- to 45-minute cure at 70 deg F (21 deg C), in gunnable and liquid formulations as recommended in writing by adhesive manufacturer for each type of repair.

D. Fasteners: Use fastener metals that are noncorrosive and compatible with each material joined.
   1. Match existing fasteners in material and type of fastener unless otherwise indicated.
   2. Use concealed fasteners for interconnecting wood components.
   3. Use concealed fasteners for attaching items to other work unless exposed fasteners are unavoidable or the existing fastening method.
   4. For fastening metals, use fasteners of same basic metal as fastened metal unless otherwise indicated.
   5. For exposed fasteners, use Phillips-type machine screws of head profile flush with metal surface unless otherwise indicated.
   6. Finish exposed fasteners to match finish of metal fastened unless otherwise indicated.

E. Anchors, Clips, and Accessories: Fabricate anchors, clips, and window accessories of aluminum, nonmagnetic stainless steel, or hot-dip zinc-coated steel complying with requirements in ASTM B633 for SC 3 (Severe) service condition.

2.9 WOOD WINDOW FINISHES

A. Factory-Primed Replacement Units: Manufacturer's standard factory-prime coat on exposed exterior and interior wood surfaces; compatible with indicated finish coating.

PART 3 - EXECUTION

3.1 PREPARATION

A. Protect adjacent materials from damage by historic treatment of wood windows.

B. Clean wood windows of mildew, algae, moss, plant material, loose paint, grease, dirt, and other debris by scrubbing with bristle brush or sponge and detergent solution. Scrub mildewed areas with mildewcide. After cleaning, rinse thoroughly with fresh water. Allow to dry before repairing or painting.

C. Condition replacement wood members and replacement units to prevailing conditions at installation areas before installing.

D. Remove and discard all storm windows, security screens, insect screens, etc., unless noted otherwise. Salvage and retain window air conditioners and associated support brackets; reinstall window air conditioners and support brackets upon request.

3.2 HISTORIC TREATMENT OF WOOD WINDOWS, GENERAL

A. Historic Treatment Appearance Standard: Completed work is to have a uniform appearance as viewed by Architect from the window interior at 5 feet (1.5 m) away and from the window exterior at 20 feet (6 m) away.

B. General: In treating historic items, disturb them as minimally as possible and as follows:
   1. Stabilize and repair wood windows to reestablish structural integrity and weather resistance while maintaining the existing form of each item.
   2. Remove coatings and apply borate preservative treatment before repair. Remove coatings according to Section 09 03 91 "Historic Treatment of Plain Painting" unless otherwise indicated.
   3. Repair items in place where possible.
   4. Install temporary protective measures to protect wood window work that is indicated to be completed later.
   5. Refinish historic wood windows according to Section 09 03 91 "Historic Treatment of Plain Painting" unless otherwise indicated.

C. Mechanical Abrasion: Where mechanical abrasion is needed for the work, use only the gentlest mechanical methods, such as scraping and natural-fiber bristle brushing, that will not abrade wood substrate, reducing clarity of detail. Do not use abrasive methods such as sanding, wire brushing, or power tools except as indicated as part of the historic treatment program and as approved by Architect.

D. Repair and Refinish Existing Hardware: Dismantle window hardware; strip paint, repair, and refinish it to match finish samples; and lubricate moving parts just enough to function smoothly.

E. Repair Wood Windows: Match existing materials and features, retaining as much original material as possible to perform repairs.
   1. Unless otherwise indicated, repair wood windows by consolidating, patching, splicing, or otherwise reinforcing wood with new wood matching existing wood or with salvaged, sound, original wood.

2. Where indicated, repair wood windows by limited replacement matching existing material.
3. Sash Balance: Repair sash balances to function according to type as specified in "Hardware" Article" above. Provide missing sash balances.

F. Replace Wood Units: Where indicated, duplicate and replace units with units made from salvaged, sound, original wood or with new wood matching existing wood. Use surviving prototypes to create patterns for duplicate replacements.
1. Compatible substitute materials may be used.

G. Protection of Openings: Where sash or windows are indicated for removal, cover resultant openings with temporary enclosures so that openings are weathertight during repair period.

H. Identify removed windows, frames, sash, and members with numbering system corresponding to window locations to ensure reinstallation in same location. Key windows, sash, and members to Drawings showing location of each removed unit. Permanently label units in a location that will be concealed after reinstallation.

3.3 WOOD WINDOW PATCH-TYPE REPAIR

A. General: Patch wood members that exhibit depressions, holes, or similar voids, and that have limited amounts of rotted or decayed wood.
1. Remove sash, storm windows, and screens from windows before performing patch-type repairs at meeting or sliding surfaces unless otherwise indicated. Reglaze units before reinstallation.
2. Verify that surfaces are sufficiently clean and free of paint residue before patching.
3. Remove rotted or decayed wood down to sound wood.

B. Apply borate preservative treatment to accessible surfaces either before applying wood consolidant or after removing rotted or decayed wood. Apply treatment liberally by brush to joints, edges, and ends; top, sides, and bottom. Allow treatment to dry.

C. Apply wood-patching compound to fill depressions, nicks, cracks, and other voids created by removed or missing wood.
1. Prime patch area with application of wood consolidant or manufacturer's recommended primer.
2. Mix only as much patching compound as can be applied according to manufacturer's written instructions.
3. Apply patching compound in layers as recommended in writing by manufacturer until the void is completely filled.
4. Sand patch surface smooth and flush with adjacent wood, without voids in patch material, and matching contour of wood member.
5. Clean spilled compound from adjacent materials immediately.

3.4 WOOD WINDOW MEMBER-REPLACEMENT REPAIR

A. General: Replace parts of or entire wood window members at locations indicated on Drawings or as indicated in the Historic Wood Window Schedule.
1. Remove sash and storm windows from windows before performing member-replacement repairs unless otherwise indicated.
2. Verify that surfaces are sufficiently clean and free of paint residue before repair.
3. Remove broken, rotted, and decayed wood down to sound wood.
4. Custom fabricate new wood to replace missing wood; either replace entire wood member or splice new wood part into existing member.

5. Secure new wood using finger joints, multiple dowels, or splines with adhesive and nailing to ensure maximum structural integrity at each splice. Use only concealed fasteners. Fill nail holes and patch surface to match surrounding sound wood.

B. Apply borate preservative treatment to accessible surfaces after replacements are made. Apply treatment liberally by brush to joints, edges, and ends; top, sides, and bottom.

C. Repair remaining depressions, holes, or similar voids with patch-type repairs.

D. Clean spilled materials from adjacent surfaces immediately.

E. Glazing: Reglaze units before reinstallation.
1. Provide replacement glazing stops coordinated with glazing system indicated.
2. Provide glazing stops to match contour of sash frames.

F. Reinstall units removed for repair into original openings.

G. Weather Stripping: Replace nonfunctioning and install missing weather stripping to ensure full-perimeter and meeting rail weather stripping for each operable sash.

GLAZING

H. Comply with combined written instructions of manufacturers of glass, glazing systems, and glazing materials, unless more stringent requirements are indicated.

I. Remove existing glass and glazing where indicated on Drawings or in the Historic Wood Window Schedule and prepare surfaces for reglazing.

J. Size glass as required by Project conditions to provide necessary bite on glass, minimum edge and face clearances, with reasonable tolerances.

K. Apply primers to joint surfaces where required for adhesion of glazing system, as determined by preconstruction testing.

L. Install setting bead, side beads, and back bead against stop in glazing rabbets before setting glass.

M. Install glass with proper orientation so that coatings, if any, face exterior or interior as required.

N. Install glazing points.

O. Disposal of Removed Glass: Remove from Owner's property and legally dispose of it unless otherwise indicated.

3.5 WOOD WINDOW UNIT REPLACEMENT

A. General: Replace existing wood window frame and sash units with new custom-fabricated units to match existing at locations indicated on Drawings or as indicated in the Historic Wood Window Schedule.

B. Apply borate preservative treatment to accessible surfaces before finishing. Apply treatment liberally by brush to joints, edges, and ends; top, sides, and bottom.

C. Mill glazed members to accommodate glass thickness. Glaze units before installation.

D. Install units, hardware, weather stripping, accessories, and other components as indicated on Drawings.

E. Install units level, plumb, square, true to line, without distortion or impeding movement; anchored securely in place to structural support; and in proper relation to wall flashing, trim, and other adjacent construction.

F. Set sill members in bed of sealant for weathertight construction unless otherwise indicated.

G. Install window units with new anchors into existing openings.

H. Weather Stripping: Install full-perimeter and meeting rail weather stripping for each operable sash.

I. Metal Protection: Separate aluminum and other corrodible surfaces from sources of corrosion or electrolytic action at points of contact with other materials.

J. Disposal of Removed Units: Remove from Owner's property and legally dispose of them.

3.6 STORM WINDOW INSTALLATION

A. Install wood storm windows at each window indicated.

B. Install units by mounting to window frames or as indicated on Drawings and according to manufacturer's written instructions.

3.7 WEATHER STRIPPING INSTALLATION

A. Install weather stripping for tight seal of joints as demonstrated in mockup.

ADJUSTING

B. Adjust existing and replacement operating sash, screens, hardware, weather stripping, and accessories for a tight fit at contact points and weather stripping for smooth operation and weathertight closure. Lubricate hardware and moving parts.

3.8 CLEANING AND PROTECTION

A. Protect window surfaces from contact with contaminating substances resulting from construction operations. Monitor window surfaces adjacent to and below exterior concrete and masonry during construction for presence of dirt, scum, alkaline deposits, stains, or other contaminants. If contaminating substances contact window surfaces, remove contaminants immediately.

B. Clean exposed surfaces immediately after historic treatment of wood windows. Avoid damage to coatings and finishes. Remove excess sealants, glazing and patching materials, dirt, and other substances.

C. Remove and replace glass that has been broken, chipped, cracked, abraded, or damaged during construction.

3.9 REPAIR SCOPE SCHEDULE

A. Level 1 Repairs: minor repairs.

1. Scope includes the repair of existing windows, transoms, sidelights, frames, and panels at exterior side.
2. Remove peeling paint down to sound wood or paint. Sound paint may remain.
3. Replace broken and cracked panes of glass.
4. Replace failed or missing glazing putty (glazing compound).
5. Prime and paint.
6. Window does not need to be made fully operational, but should be made weather tight.

B. Level 3 Repairs: major repairs.
1. Scope includes the repair of existing windows, transoms, sidelights, frames, and panels at exterior and interior side.
2. Remove sashes from window frame for repairs in the shop, and provide temporary panels for security and weather protection.
3. Remove all glazing putty (glazing compound).
4. Remove and salvage glass in serviceable condition for reinstallation.
5. Prepare all wood surfaces, remove paint, and fill gouges and scratches with wood patching compound.
6. Provide wood consolidant as necessary.
7. Replace wood component(s) where indicated. Replace part of wood window sash and/or wood window frame as indicated with new wood material. Profiles and dimensions shall match existing.
8. Prep and paint all wood surfaces on sashes (interior and exterior). Include surfaces not exposed to view.
9. Reinstall glass. Provide new glazing putty (glazing compound) and new glazing points.
10. Provide new panes to glass to match existing, where indicated and where broken or cracked prior to or following removal and salvage.
11. Replace weatherstripping. Salvaged metal spring weatherstripping in good condition may be retained and reinstalled.
12. Remove and reinstall hardware pulls and locks. Remove paint from hardware. Adjust hardware to working condition. Inform architect if hardware cannot be salvaged and reused.
13. Repair sash weights, sash pulleys, and sash cords to working condition for all operable sashes.
14. Reinstall frame sash stops and other components as appropriate. Provide new removable fasteners (screws) for future maintenance and removal of sashes.
15. Prep and paint all wood surfaces of the window frame (interior and exterior). Include surfaces not exposed to view.
16. Replace joint sealants at perimeter of the window frame and trim (interior and exterior).

END OF SECTION 08 03 52

SECTION 08 14 33 - STILE AND RAIL WOOD DOORS

PART 1 - GENERAL

1.1 SUMMARY

A. Section Includes:
   1. Exterior stile and rail wood doors and fixed, glazed transoms.
   2. Exterior wood frames and trim.
   3. Fitting stile and rail wood doors to frames and machining for hardware.
   4. Pre-hanging doors in frames.

1.2 SUBMITTALS

A. Product Data: For each type of product indicated.
   1. Include details of construction and glazing.
   2. Include factory finishing specifications.

B. Shop Drawings: Indicate location, size, and hand of each door; elevation of each kind of door; construction details not covered in Product Data; and other pertinent data.

1.3 QUALITY ASSURANCE

A. Provide true stile and rail doors from a single manufacturer.

B. Safety Glass: Provide products complying with testing requirements in 16 CFR 1201, for Category II materials, unless those of Category I are expressly indicated and permitted.

1.4 DELIVERY, STORAGE, AND HANDLING

A. Protect doors with resilient packaging. Store doors flat on a level surface, in a clean, dry, and well-ventilated area protected from the sunlight. Avoid subjecting doors to extreme heat, dryness, or moisture. Break seal (plastic protective packaging only) on-site to permit ventilation.

B. Do not drag doors across one another.

1.5 COORDINATION

A. Coordinate the work with door opening construction, door frame and door hardware installation.

1.6 PROJECT CONDITIONS

A. Environmental Limitations: Do not deliver or install doors until spaces are enclosed and weathertight, wet work in spaces is complete and dry, and temporary HVAC system is operating and maintaining ambient temperature and humidity conditions at occupancy levels during the remainder of the construction period.

1.7 WARRANTY

A. Special Warranty: Manufacturer's standard form in which manufacturer agrees to repair or replace wood door assemblies that fail in materials or workmanship within specified warranty period.
   1. Failures include, but are not limited to, the following:
      a. Failure to meet performance requirements.

b. Structural failures including excessive deflection, water leakage, air infiltration, or condensation.
c. Faulty operation of operable units and hardware.
d. Deterioration of wood, metals, vinyl, and other materials, beyond normal weathering.
e. Failure of insulating glass.

2. Warranty Period:
a. Door Assembly: 10 years from date of Substantial Completion.
b. Glazing: 20 years from date of Substantial Completion.

PART 2 - PRODUCTS

2.1 STILE AND RAIL WOOD DOORS AND TRANSOMS

A. Basis of Design: Custom stile and rail wood doors as manufactured by The Maiman Company.

B. Subject to compliance with requirements, provide the named product or comparable product by of the following:
1. Maiman Company (The).
2. Marvin Windows and Doors.
3. Pozzi Custom Collection; JELD-WEN, Inc.
4. Adams Architectural Millwork Company.

C. Panel Designs: Indicated by Drawings. Do not modify intended aesthetic effects, as judged solely by Architect, except with Architect's approval. If modifications are proposed, submit comprehensive explanatory data to Architect for review.

D. Wood Species and Finish: Clear Mahogany or White Oak; factory prime finish.
1. Kiln dried to a moisture content of 8-10% prior to fabrication.

E. Finish: Opaque.

F. Door Construction: 2-1/4-inch thickness, unless noted otherwise.
1. Stile and Rail Construction: Laminated veneer core (LVL) wood stiles and rails with not less than 1/16-inch face veneer.
a. Assemble using hot press method for laminating door materials.
b. Provide edge banding and sticking profile of solid lumber (veneered profile is not acceptable).
c. Corners glued and fastened with 5/8 inch by 4 inch (16 mm by 102 mm) fluted hardwood dowels.
d. Non-removable interior wood glazing stops.
e. Stave Core Pine is acceptable in lieu of LVL.
2. Panel Construction: Extira panel.
3. Stile and Rail Widths: As indicated.
4. Molding Profile (Sticking): As indicated.

G. Frame Construction: Finger jointed, edge-glued pine core with clear pine veneer.
1. Frame Thickness: not less than 13/16 inches.
2. Frame Depth: As indicated on Drawings.
3. Jamb Extensions: Furnish jamb extensions, factory installed (loose), for wall thickness indicated or required.
4. Exterior Wood Mouldings: As indicated on Drawings; match exterior frame finish.

H. Sill: Fiberglass reinforced pultruded sill with water shed and weep system; 0.100 inch thickness; color as selected; mahogany interior sill liner.

2.2 GLAZING

A. Insulating Glass Units: As specified in Section 08 80 00.

2.3 STILE AND RAIL WOOD DOOR FABRICATION

A. General: Use only materials that comply with referenced standards and other requirements specified.
   1. Assemble exterior doors and sidelights, including components, with wet-use adhesives complying with ASTM D 5572 for finger joints and with ASTM D 5751 for joints other than finger joints.

B. Factory fit doors to suit frame-opening sizes indicated, with the following uniform clearances and bevels unless otherwise indicated:
   1. Clearances: Provide 1/8 inch at heads, jambs, and between pairs of doors. Provide 1/2 inch from bottom of door to top of decorative floor finish or covering. Where threshold is shown or scheduled, provide not more than 3/8 inch from bottom of door to top of threshold.
      a. Comply with NFPA 80 for fire-rated doors.
   2. Bevel non-fire-rated doors 1/8 inch in 2 inches at lock and hinge edges.

C. Factory machine doors for hardware that is not surface applied. Locate hardware to comply with DHI-WDHS-3. Comply with final hardware schedules, door frame Shop Drawings, DHI A115-W Series standards, and hardware templates.
   1. Coordinate measurements of hardware mortises in metal frames to verify dimensions and alignment before factory machining.

D. Glazed Openings: Trim openings indicated for glazing with solid wood moldings, with one side removable. Miter wood moldings at corner joints.

E. Pre-hung Doors: Provide stile and rail doors as pre-hung units including doors, frames, and hardware.
   1. Knock-down frame delivery method is acceptable.

2.4 WOOD FINISH

A. Exterior and Interior: Prime paint at factory.

PART 3 - EXECUTION

3.1 EXAMINATION

A. Examine doors and substrates, with Installer present, for suitable conditions where wood stile and rail doors and fire-rated wood door frames will be installed.
   1. Verify that installed frames comply with indicated requirements for type, size, location, and swing characteristics and have been installed with level heads and plumb jambs.
   2. Masonry Surfaces: Visibly dry and free of excess mortar, sand, and other construction debris.
   3. Wood Frame Walls: Dry, clean, sound, well nailed, free of voids, and without offsets at joints. Ensure that nail heads are driven flush with surfaces in opening and within 3 inches of opening.

B. Proceed with installation only after unsatisfactory conditions have been corrected.

3.2 INSTALLATION

A. Install wood doors to comply with manufacturer's written instructions, approved Shop Drawings, and other requirements specified.

B. Install doors level, plumb, square, true to line, without distortion or impeding thermal movement, anchored securely in place to structural support, and in proper relation to wall flashing and other adjacent construction.

C. Set sill members in bed of sealant or with gaskets, as indicated, for weathertight construction.

D. Separate aluminum and other corrodible surfaces from sources of corrosion or electrolytic action at points of contact with other materials.

3.3 ADJUSTING, CLEANING, AND PROTECTION

A. Operation: Rehang or replace doors that do not swing or operate freely.

B. Clean factory-glazed glass immediately after installing windows. Comply with manufacturer's written recommendations for final cleaning and maintenance. Remove nonpermanent labels, and clean surfaces.

C. Remove and replace glass that has been broken, chipped, cracked, abraded, or damaged during construction period.

D. Protect surfaces from contact with contaminating substances resulting from construction operations. In addition, monitor surfaces adjacent to and below exterior concrete and masonry surfaces during construction for presence of dirt, scum, alkaline deposits, stains, or other contaminants. If contaminating substances do contact door or frame surfaces, remove contaminants immediately according to manufacturer's written recommendations.

END OF SECTION 08 14 33

SECTION 08 41 13 - ALUMINUM-FRAMED ENTRANCES AND STOREFRONTS

PART 1 - GENERAL

1.1 SUMMARY

A. Section Includes:
   1. Exterior storefront framing.
   2. Exterior manual-swing entrance doors and door-frame units.
   3. Aluminum sill flashing, aluminum trim, and aluminum in-fill components.

1.2 DEFINITIONS

A. ADA/ABA Accessibility Guidelines: U.S. Architectural & Transportation Barriers Compliance Board's "Americans with Disability Act (ADA) and Architectural Barriers Act (ABA) Accessibility Guidelines for Buildings and Facilities."

1.3 PERFORMANCE REQUIREMENTS

A. General Performance: Aluminum-framed systems shall withstand the effects of the following performance requirements without exceeding performance criteria or failure due to defective manufacture, fabrication, installation, or other defects in construction:
   1. Movements of supporting structure indicated on Drawings including, but not limited to, story drift and deflection from uniformly distributed and concentrated live loads.
   2. Dimensional tolerances of building frame and other adjacent construction.
   3. Failure includes the following:
      a. Deflection exceeding specified limits.
      b. Thermal stresses transferring to building structure.
      c. Framing members transferring stresses, including those caused by thermal and structural movements to glazing.
      d. Glazing-to-glazing contact.
      e. Noise or vibration created by wind and by thermal and structural movements.
      f. Loosening or weakening of fasteners, attachments, and other components.
      g. Sealant failure.
      h. Failure of operating units.

B. Delegated Design: Design aluminum-framed systems, including comprehensive engineering analysis by a qualified professional engineer, using performance requirements and design criteria indicated.

C. Structural Loads:
   1. Wind Loads: As indicated on Structural Drawings.

D. Deflection of Framing Members:
   1. Deflection Normal to Wall Plane: Limited to edge of glass in a direction perpendicular to glass plane shall not exceed L/175 of the glass edge length for each individual glazing lite or an amount that restricts edge deflection of individual glazing lites to 3/4 inch, whichever is less.
   2. Deflection Parallel to Glazing Plane: Limited to L/360 of clear span or 1/8 inch, whichever is smaller.

E. Structural-Test Performance: Provide aluminum-framed systems tested according to ASTM E 330 as follows:

1. When tested at positive and negative wind-load design pressures, systems do not evidence deflection exceeding specified limits.
2. When tested at 150 percent of positive and negative wind-load design pressures, systems, including anchorage, do not evidence material failures, structural distress, and permanent deformation of main framing members exceeding 0.2 percent of span.
3. Test Durations: As required by design wind velocity, but not fewer than 10 seconds.

F. Air Infiltration: Test according to ASTM E 283 for infiltration as follows:
1. Fixed Framing and Glass Area:
   a. Maximum air leakage of 0.06 cfm/sq. ft. at a static-air-pressure differential of 6.24 lbf/sq. ft.
2. Entrance Doors:
   a. Single Doors: Maximum air leakage of 0.5 cfm/sq. ft. at a static-air-pressure differential of 6.24 lbf/sq. ft.
   b. Pair of Doors: Maximum air leakage of 1.0 cfm/sq. ft. at a static-air-pressure differential of 1.57 lbf/sq. ft.

G. Water Penetration under Static Pressure: Provide aluminum-framed systems that do not evidence water penetration through fixed glazing and framing areas when tested according to ASTM E 331 at a minimum static-air-pressure difference of 20 percent of positive wind-load design pressure, but not less than 12.0 lbf/sq. ft.

H. Thermal Movements: Provide aluminum-framed systems that allow for thermal movements resulting from the following maximum change (range) in ambient and surface temperatures. Base engineering calculation on surface temperatures of materials due to both solar heat gain and nighttime-sky heat loss.
1. Temperature Change (Range): 120° F, ambient; 180° F, material surfaces.
2. Interior Ambient-Air Temperature: 72° F.

I. Energy Performance: Certify and label energy performance according to NFRC as follows:
1. Thermal Transmittance (U-factor):
   a. Fixed glazing and framing areas shall have U-factor of not more than 0.43 Btu/sq. ft. x h x deg F as determined according to NFRC 100.
   b. Aluminum entrance doors shall have U-factor of not more than 0.80 Btu/sq. ft. x h x deg F as determined according to NFRC 100
2. Condensation Resistance: Fixed glazing and framing areas shall have an NFRC-certified condensation resistance rating of no less than 61 as determined according to NFRC 500.

1.4 SUBMITTALS

A. Product Data: For each type of product indicated. Include construction details, material descriptions, dimensions of individual components and profiles, and finishes for aluminum-framed systems.

B. Shop Drawings: For aluminum-framed systems. Include plans, elevations, sections, details, and attachments to other work.
1. Include details of provisions for system expansion and contraction and for drainage of moisture in the system to the exterior.

C. Samples for Verification: For each type of exposed finish required, in manufacturer's standard sizes.

D. Qualification Data: For qualified Installer.

E. Welding certificates.

F. Product Test Reports: Based on evaluation of comprehensive tests performed by a qualified testing agency, for aluminum-framed systems, indicating compliance with performance requirements.

G. Maintenance Data: For aluminum-framed systems to include in maintenance manuals.

H. Delegated-Design Submittal: For installed products indicated to comply with performance requirements and design criteria, including analysis data signed and sealed by the qualified professional engineer responsible for their preparation.
   1. Certification: Submit written certification prepared and sealed by a registered structural engineer licensed in the State of Iowa, verifying the ability of all members, assemblies, and connections to support the loads specified and required by applicable codes and regulations.

1.5 QUALITY ASSURANCE

A. Installer Qualifications: Manufacturer's authorized representative who is trained and approved for installation of units required for this Project.

B. Engineering Responsibility: Prepare data for aluminum-framed systems, including Shop Drawings, based on testing and engineering analysis of manufacturer's standard units in systems similar to those indicated for this Project.

C. Product Options: Information on Drawings and in Specifications establishes requirements for systems' aesthetic effects and performance characteristics. Aesthetic effects are indicated by dimensions, arrangements, alignment, and profiles of components and assemblies as they relate to sightlines, to one another, and to adjoining construction. Performance characteristics are indicated by criteria subject to verification by one or more methods including preconstruction testing, field testing, and in-service performance.
   1. Do not revise intended aesthetic effects, as judged solely by Architect, except with Architect's approval. If revisions are proposed, submit comprehensive explanatory data to Architect for review.

D. Accessible Entrances: Comply with applicable provisions in the U.S. Architectural & Transportation Barriers Compliance Board's ADA-ABA Accessibility Guidelines.

E. Source Limitations: Obtain glazed aluminum curtain walls, aluminum storefront, aluminum-framed entrances, and aluminum windows through one source from a single manufacturer.

F. Welding Qualifications: Qualify procedures and personnel according to AWS D1.2, "Structural Welding Code - Aluminum."

1.6 PROJECT CONDITIONS

A. Field Measurements: Verify actual locations of structural supports for aluminum-framed systems by field measurements before fabrication and indicate measurements on Shop Drawings.

1.7 WARRANTY

A. Special Warranty: Manufacturer agrees to repair or replace components of aluminum-framed entrances and storefronts that do not comply with requirements or that fail in materials or workmanship within specified warranty period.
   1. Failures include, but are not limited to, the following:
      a. Structural failures including, but not limited to, excessive deflection.
      b. Noise or vibration created by wind and thermal and structural movements.

c. Deterioration of metals, metal finishes, and other materials beyond normal weathering.
d. Water penetration through fixed glazing and framing areas.
e. Failure of operating components.

2. Warranty Period: 10 years from date of Substantial Completion.

PART 2 - PRODUCTS

2.1 MANUFACTURERS

A. Basis of Design Systems:
1. EFCO Corporation; Series 433 2" x 4 1/2" Thermal Storefront Framing (Insulated Glazing Units).
2. Kawneer North America; Series TR-2800 2” x 2 1/4” Thermal Fixed Architectural Window (Insulated Glazing Units).

B. Manufacturers: Subject to compliance with requirements, provide products by one of the following:
1. EFCO Corporation.
2. Kawneer North America; an Alcoa company.
3. Manko Window Systems, Inc.
4. Pittco Architectural Metals, Inc.
5. Oldcastle Building Envelopes.
6. Tubelite, Inc.
7. Wausau Window and Wall Systems.

2.2 MATERIALS

A. Aluminum: Alloy and temper recommended by manufacturer for type of use and finish indicated.
1. Sheet and Plate: ASTM B 209.
2. Extruded Bars, Rods, Profiles, and Tubes: ASTM B 221.
3. Extruded Structural Pipe and Tubes: ASTM B 429.
4. Structural Profiles: ASTM B 308/B 308M.
5. Welding Rods and Bare Electrodes: AWS A5.10/A5.10M.

B. Steel Reinforcement: Manufacturer's standard zinc-rich, corrosion-resistant primer, complying with SSPC-PS Guide No. 12.00; applied immediately after surface preparation and pretreatment. Select surface preparation methods according to recommendations in SSPC-SP COM and prepare surfaces according to applicable SSPC standard.
1. Structural Shapes, Plates, and Bars: ASTM A 36/A 36M.
2. Cold-Rolled Sheet and Strip: ASTM A 1008/A 1008M.
3. Hot-Rolled Sheet and Strip: ASTM A 1011/A 1011M.

2.3 FRAMING SYSTEMS

A. Framing Members: Manufacturer's standard extruded-aluminum framing members of thickness required and reinforced as required to support imposed loads.
1. Construction: Thermally broken.
2. Size: 2 x 4-1/2 inches (nominal).
3. Glazing System: Retained mechanically with gaskets on four sides.
4. Glazing Plane: Outside glazed.

B. Brackets and Reinforcements: Manufacturer's standard high-strength aluminum with non-staining, nonferrous shims for aligning system components.

C. Fasteners and Accessories: Manufacturer's standard corrosion-resistant, non-staining, nonbleeding fasteners and accessories compatible with adjacent materials.
   1. Use self-locking devices where fasteners are subject to loosening or turning out from thermal and structural movements, wind loads, or vibration.
   2. Reinforce members as required to receive fastener threads.

D. Concrete and Masonry Inserts: Hot-dip galvanized cast-iron, malleable-iron, or steel inserts, complying with ASTM A 123/A 123M or ASTM A 153/A 153M.

E. Trim and Infill Panels: Minimum 0.125 inch thick aluminum; finish to match mullion sections where exposed.

F. Exposed-to-View Flashings: Minimum 0.62 inch thick aluminum; finish to match mullion sections where exposed.

G. Concealed Flashing: Dead-soft, 0.018-inch- thick stainless steel, ASTM A 240/A 240M of type recommended by manufacturer.

H. Framing System Gaskets and Sealants: Manufacturer's standard, recommended by manufacturer for joint type.

I. Brick Molding: Aluminum, color to match storefront system, at the perimeter of the storefront.
   1. Basis of Design: Special-Lite® Brick Moulding. Size: 1¾” x 1 ¼“ nominal.

2.4 GLAZING SYSTEMS

A. Glazing: As specified in Division 08 Section "Glazing."

B. Glazing Gaskets: Manufacturer's standard compression types; replaceable, molded or extruded, of profile and hardness required to maintain watertight seal.

C. Spacers and Setting Blocks: Manufacturer's standard elastomeric type.

D. Bond-Breaker Tape: Manufacturer's standard TFE-fluorocarbon or polyethylene material to which sealants will not develop adhesion.

E. Solar Control Films: As specified in Division 08 Section "Solar Control Films." Locations as shown on the drawings.

F. Decorative Glass Films: As specified in Division 08 Section "Decorative Glass Glazing." Locations as shown on the drawings.

G. Signage: As specified in Division 10 Section "Exterior Signage." Locations as shown on the drawings.

2.5 ENTRANCE DOOR SYSTEMS

A. Entrance Doors: Manufacturer's standard glazed entrance doors for manual-swing operation.
   1. Door Construction: 1-3/4-inch overall thickness, with minimum 0.125-inch-thick, extruded-aluminum tubular rail and stile members. Mechanically fasten corners with reinforcing brackets that are deeply penetrated, and fillet welded.
   2. Door Design: As indicated.
      a. Accessible Doors: Smooth surfaced for width of door in area within 10 inches above floor or ground plane.
   3. Glazing in doors:

a. Glazing shall be insulated.
b. Glazing shall be fully tempered, as required by code.

4. Glazing Stops and Gaskets: Square, snap-on, extruded-aluminum stops and preformed gaskets.
   a. Provide nonremovable glazing stops on outside of door.

B. Entrance Door Hardware: As specified in Division 08 Section "Door Hardware."

2.6 ACCESSORY MATERIALS

A. Joint Sealants: For installation at perimeter of aluminum-framed systems, as specified in Division 07 Section "Joint Sealants."

B. Bituminous Paint: Cold-applied, asphalt-mastic paint complying with SSPC-Paint 12 requirements except containing no asbestos; formulated for 30-mil thickness per coat.

2.7 FABRICATION

A. Form or extrude aluminum shapes before finishing.

B. Weld in concealed locations to greatest extent possible to minimize distortion or discoloration of finish. Remove weld spatter and welding oxides from exposed surfaces by descaling or grinding.

C. Framing Members, General: Fabricate components that, when assembled, have the following characteristics:
   1. Profiles that are sharp, straight, and free of defects or deformations.
   2. Accurately fitted joints with ends coped or mitered.
   3. Means to drain water passing joints, condensation within framing members, and moisture migrating within the system to exterior.
   4. Physical and thermal isolation of glazing from framing members.
   5. Accommodations for thermal and mechanical movements of glazing and framing to maintain required glazing edge clearances.
   6. Provisions for field replacement of glazing from exterior.
   7. Fasteners, anchors, and connection devices that are concealed from view to greatest extent possible.

D. Thermally Barriers: Fabricate aluminum framing, including receptor head, sill, and sub-sill members, with an integral, concealed, low-conductance thermal barrier; located between exterior materials and members exposed on interior side; in a manner that eliminates direct metal-to-metal contact. Provide one of the following thermal barrier systems:
   1. Dual-Thermal Struts: Glass-reinforced polyamide nylon, mechanically crimped in raceways extruded in the exterior and interior extrusions.
   2. Pour and Debridge Thermal Barrier: Integral structural two-part polyurethane thermal break; thermal barrier pocket of aluminum extrusion shall be abraded or lanced to create a mechanical lock. Subject to compliance with requirements, provide the following:
      a. Product: AZON USA, AZO-Abrader or Lancer; No substitutions are permitted.

E. Mechanically Glazed Framing Members: Fabricate for flush glazing without projecting stops.

F. After fabrication, clearly mark components to identify their locations in Project according to Shop Drawings.

2.8 ALUMINUM FINISHES

A. Clear Anodic Finish: AAMA 611, AA-M12C22A41, Class I, 0.018 mm or thicker.

B. Color Schedule: see drawings for finish colors.

PART 3 - EXECUTION

3.1 EXAMINATION

A. Examine areas and conditions, with Installer present, for compliance with requirements for installation tolerances and other conditions affecting performance of the Work.

B. Proceed with installation only after unsatisfactory conditions have been corrected.

3.2 INSTALLATION

A. General:
   1. Comply with manufacturer's written instructions.
   2. Do not install damaged components.
   3. Fit joints to produce hairline joints free of burrs and distortion.
   4. Rigidly secure nonmovement joints.
   5. Install anchors with separators and isolators to prevent metal corrosion and electrolytic deterioration.
   6. Seal joints watertight unless otherwise indicated.

B. Metal Protection:
   1. Where aluminum will contact dissimilar metals, protect against galvanic action by painting contact surfaces with primer or applying sealant or tape, or by installing nonconductive spacers as recommended by manufacturer for this purpose.
   2. Where aluminum will contact concrete or masonry, protect against corrosion by painting contact surfaces with bituminous paint.
   3. Where aluminum will contact preservative treated wood members, separate aluminum from wood member with either 1/4 inch (minimum) polyethylene or nylon spacers or 10 mil polyethylene separation film.

C. Install components to drain water passing joints, condensation occurring within framing members, and moisture migrating within the system to exterior.

D. Install continuous aluminum sill flashings below all aluminum storefront sill members including jamb if jamb is continuous to the bottom of the opening.
   1. Extend flashing completely beneath the opening and turn up behind and beside the window unit to a form a watertight "pan".
   2. Drain pan to the exterior with positive slope.
   3. Flashing shall be sealed at the corners.
   4. Do not penetrate the horizontal portion of flashing.
   5. Turn up flashing at edges sufficiently to account for differential air pressure.
   6. Seal sill flashing to frame to prevent air infiltration except at internal drainage weep holes. Do not seal internal drainage weep holes.

E. Set continuous sill members and flashing in full sealant bed as specified in Division 07 Section "Joint Sealants" to produce weathertight installation.

F. Install components plumb and true in alignment with established lines and grades, and without warp or rack.

G. Install glazing as specified in Division 08 Section "Glazing."

H. Entrance Doors: Install doors to produce smooth operation and tight fit at contact points.
   1. Exterior Doors: Install to produce weathertight enclosure and tight fit at weather stripping.
   2. Field-Installed Entrance Door Hardware: Install surface-mounted entrance door hardware according to entrance door hardware manufacturers' written instructions using concealed fasteners to greatest extent possible.

I. Install perimeter joint sealants as specified in Division 07 Section "Joint Sealants" to produce weathertight installation.

3.3 ERECTION TOLERANCES

A. Install aluminum-framed systems to comply with the following maximum erection tolerances:
   1. Location and Plane: Limit variation from true location and plane to 1/8 inch in 12 feet; 1/4 inch over total length.
   2. Alignment:
      a. Where surfaces abut in line, limit offset from true alignment to 1/16 inch.
      b. Where surfaces meet at corners, limit offset from true alignment to 1/32 inch.

B. Diagonal Measurements: Limit difference between diagonal measurements to 1/8 inch.

3.4 ADJUSTING

A. Adjust operating entrance door hardware to function smoothly as recommended by manufacturer.
   1. For entrance doors accessible to people with disabilities, adjust closers to provide a 3-second closer sweep period for doors to move from a 70-degree open position to 3 inches from the latch, measured to the leading door edge.

END OF SECTION 08 41 13

SECTION 08 45 23 - FIBERGLASS-SANDWICH-PANEL ASSEMBLIES

PART 1 - GENERAL

1.1 SUMMARY

A. Section includes aluminum-framed assemblies incorporating fiberglass-sandwich panels as follows:
   1. Skylight assemblies.

1.2 ACTION SUBMITTALS

A. Product Data: For each type of product.
   1. Include construction details, material descriptions, dimensions of individual components and profiles, and finishes for aluminum components of panel assemblies.

B. Shop Drawings: For panel assemblies.
   1. Include plans, elevations, sections, details, and attachments to other work.
   2. Include details of provisions for assembly expansion and contraction and for draining moisture within the assembly to the exterior.

C. Samples: In manufacturer's standard size.
   1. For each type of fiberglass-sandwich panel.
   2. For each type of exposed finish for framing members.

D. Delegated-Design Submittal: For panel assemblies indicated to comply with performance requirements and design criteria, including analysis data signed and sealed by the qualified professional engineer responsible for their preparation.

1.3 INFORMATIONAL SUBMITTALS

A. Sample Warranties: For special warranties.

1.4 CLOSEOUT SUBMITTALS

A. Maintenance Data: For panel assemblies to include in maintenance manuals.

1.5 QUALITY ASSURANCE

A. Manufacturer Qualifications: For fiberglass-sandwich panels, a qualified manufacturer whose facilities, processes, and products are monitored by an independent, accredited quality-control agency for compliance with applicable requirements in ICC-ES AC04 or ICC-ES AC177.

B. Installer Qualifications: An authorized representative who is trained and approved by manufacturer.

C. Mockups: Build mockups to verify selections made under Sample submittals and to demonstrate aesthetic effects and set quality standards for fabrication and installation.
   1. Build mockup of typical panel assemblies.
   2. Approval of mockups does not constitute approval of deviations from the Contract Documents contained in mockups unless Architect specifically approves such deviations in writing.
   3. Subject to compliance with requirements, approved mockups may become part of the completed Work if undisturbed at time of Substantial Completion.

1.6 WARRANTY

A. Manufacturer's Warranty: Manufacturer agrees to repair or replace components of panel assemblies that fail in materials or workmanship within specified warranty period.
   1. Failures include, but are not limited to, the following:
      a. Structural failures including, but not limited to, excessive deflection.
      b. Deterioration of metals, metal finishes, and other materials beyond normal weathering.
      c. Water leakage.
   2. Warranty Period: Five years from date of Substantial Completion.

B. Manufacturer's Special Warranty: Manufacturer agrees to repair or replace fiberglass-sandwich panels that exhibit defects in materials or workmanship within specified warranty period.
   1. Defects include, but are not limited to, the following:
      a. Fiberbloom.
      b. Delamination of coating, if any, from exterior face sheet.
      c. Color change exceeding requirements.
      d. Delamination of panel face sheets from panel cores.
   2. Warranty Period: 20 years from date of Substantial Completion.

C. Special Aluminum-Finish Warranty: Manufacturer's standard form in which manufacturer agrees to repair or replace components on which finishes fail within specified warranty period. Warranty does not include normal weathering.
   1. Failures include, but are not limited to, checking, crazing, peeling, chalking, and fading of finishes.
   2. Warranty Period: 10 years from date of Substantial Completion.

PART 2 - PRODUCTS

2.1 PERFORMANCE REQUIREMENTS

A. Delegated Design: Engage a qualified professional engineer, as defined in Section 01 40 00 "Quality Requirements," to design fiberglass-sandwich-panel assemblies.

B. Structural-Test Performance: Provide panel assemblies tested according to ASTM E330, as follows:
   1. When tested at positive and negative wind-load design pressures, assemblies do not show evidence of deflection exceeding specified limits.
   2. When tested at 150 percent of positive and negative wind-load design pressures, assemblies, including anchorage, do not show evidence of material failures, structural distress, and permanent deformation of main framing members exceeding 0.2 percent of span.
   3. Test Durations: As required by design wind velocity, but not less than [**10**] seconds.

C. Water Penetration under Static Pressure: Provide panel assemblies that do not evidence water penetration through fixed glazing and framing areas when tested according to ASTM E331 at a minimum static-air-pressure difference of 20 percent of positive wind-load design pressure, but not less than 15 lbf/sq. ft.

D. Water Penetration under Dynamic Pressure: Provide panel assemblies that do not evidence water leakage through fixed glazing and framing areas when tested according to AAMA 501.1 under dynamic pressure equal to 20 percent of positive wind-load design pressure, but not less than 6.24 lbf/sq. ft.
   1. Maximum Water Leakage: No uncontrolled water penetrating aluminum-framed systems or water appearing on systems' normally exposed interior surfaces from sources other than

condensation. Water leakage does not include water that is controlled by flashing and gutters and drained to the exterior, or water that cannot damage adjacent materials or finishes.

E. Thermal Movements: Allow for thermal movements from ambient- and surface-temperature changes. Base calculations on surface temperatures of materials due to both solar heat gain and nighttime-sky heat loss.
   1. Temperature Change (Range): 120 deg F, ambient; 180 deg F, material surfaces.

F. Energy Performance – Skylight Assemblies: Provide skylight assemblies with performance properties specified, as indicated in manufacturer's published test data, based on procedures indicated below and certified and labeled according to NFRC:
   1. Thermal Transmittance (U-Factor): Fixed glazing and framing areas shall have U-factor of not more than 0.28 Btu/sq. ft. x h x deg F as determined according to NFRC 100.
   2. Solar Heat Gain Coefficient (SHGC): Fixed glazing and framing areas shall have a SHGC of no greater than 0.21 as determined according to NFRC 200.
   3. Air Infiltration: Maximum air leakage through fixed glazing and framing areas of of fixed wall area as determined according to ASTM E283 at a minimum static-air-pressure differential of 6.24 lbf/sq. ft.
   4. Light Transmission: 23 percent as determined according to NFRC 200

2.2 FIBERGLASS-SANDWICH-PANEL ASSEMBLIES

A. Fiberglass-Sandwich-Panel Assemblies: Translucent assemblies that are supported by aluminum framing and glazed with fiberglass-sandwich panels.
   1. Manufacturers: Subject to compliance with requirements, provide products by one of the following:
      a. Kalwall Corporation.
      b. Major Industries, Inc.

2.3 FIBERGLASS-SANDWICH PANELS

A. Fiberglass-Sandwich Panels: Uniformly colored, translucent, thermoset, fiberglass-reinforced-polymer face sheets bonded to both sides of a grid core.

B. Panel Thickness: 2-3/4 inches.

C. Grid Core: Mechanically interlocked, extruded-aluminum I-beams, with a minimum flange width of 7/16 inch.
   1. Extruded Aluminum: ASTM B221, in alloy and temper recommended in writing by manufacturer.
   2. I-Beam Construction: Thermally broken, extruded aluminum.
   3. Grid Pattern: Inline rectangle, nominal 12 by 24 inches.

D. Exterior Face Sheet:
   1. Thickness: 0.070 inch.
   2. Color: Crystal.
   3. Protective Weathering Surface: Integral, embedded-glass erosion barrier.

E. Interior Face Sheet:
   1. Thickness: 0.045 inch.
   2. Color: Crystal.

F. Fiberglass-Sandwich-Panel Adhesive: Manufacturer's standard for permanent adhesion of facings to cores.

G. Panel Strength:
   1. Maximum Panel Deflection: 3-1/2 inches when a 4-by-12-foot panel is tested according to ASTM E72 at 34 lbf/sq. ft., with a maximum 0.090-inch set deflection after five minutes.
   2. Panel Support Strength: Capable of supporting, without failure, a 300-lbf concentrated load when applied to a 3-inch- diameter disk according to ASTM E661.

H. Panel Performance:
   1. Self-Ignition Temperature: 650 deg F or more according to ASTM D1929.
   2. Smoke-Developed Index: 450 or less according to ASTM E84, or 75 or less according to ASTM D2843.
   3. Combustibility Classification: Class CC1 based on testing according to ASTM D635.
   4. Roof-Covering Classification: Class B according to ASTM E108 or UL 790.
   5. Interior Finish Classification: Class B based on testing according to ASTM E84.
   6. Color Change: Not more than 3.0 units Delta E, when measured according to ASTM D2244, after outdoor weathering compliant with procedures in ASTM D1435.
      a. Outdoor Weathering Conditions: Sixty months in southern Florida.
   7. Impact Resistance: No fracture or tear at impact of 60 ft. x lbf by a 3-1/4-inch- diameter, 5-lb freefalling ball according to UL 972 test procedure.
   8. Haze Factor: Greater than 90 percent when tested according to ASTM D1003.

2.4 ALUMINUM FRAMING SYSTEMS

A. Components: Manufacturer's standard extruded-aluminum members of thickness required and reinforced as required to support imposed loads.
   1. Construction: Thermally broken, extruded aluminum.

B. Aluminum: Alloy and temper recommended in writing by manufacturer for type of use and finish indicated.
   1. Sheet and Plate: ASTM B209.
   2. Extruded Bars, Rods, Profiles, and Tubes: ASTM B221.
   3. Extruded Structural Pipe and Tubes: ASTM B429.
   4. Structural Profiles: ASTM B308.

C. Brackets and Reinforcements: Manufacturer's standard high-strength aluminum with nonstaining, nonferrous shims for aligning skylight components.

D. Fasteners and Accessories: Manufacturer's standard, corrosion-resistant, nonstaining, and nonbleeding fasteners and accessories; compatible with adjacent materials.
   1. At closures, retaining caps, or battens, use ASTM A193, 300 series stainless-steel screws.
   2. Use self-locking devices where fasteners are subject to loosening or turning out from thermal and structural movements, wind loads, or vibration.
   3. At movement joints, use slip-joint linings, spacers, and sleeves of material and type recommended in writing by manufacturer.

E. Anchor Bolts: ASTM A307, Grade A, galvanized steel.

F. Concealed Flashing: Corrosion-resistant, nonstaining, nonbleeding flashing compatible with adjacent materials.

G. Exposed Flashing and Closures: Aluminum sheet not less than 0.063-inch-thick, finished to match framing.

H. Framing Gaskets: Manufacturer's standard.

I. Frame-System Sealants: As recommended in writing by manufacturer.

J. Corrosion-Resistant Coating: Cold-applied asphalt mastic, compounded for 15-mil dry film thickness per coat. Provide inert-type noncorrosive compound free of asbestos fibers, sulfur components, and other deleterious impurities.

2.5 FABRICATION

A. Frame System Fabrication:
   1. Fabricate components that, when assembled, have the following characteristics:
      a. Profiles that are sharp, straight, and free of defects or deformations.
      b. Accurately fitted joints with ends coped or mitered.
      c. Internal guttering systems or other means to drain water passing through joints, and moisture migrating within assembly to exterior.
   2. Fabricate sill closures with weep holes and for installation as continuous component.
   3. Reinforce components as required to receive fastener threads.

B. Panel Fabrication: Factory assemble and seal panels.
   1. Laminate face sheets to grid core under a controlled process using heat and pressure to produce straight adhesive bonding lines that cover width of core members and that have sharp edges.
      a. White spots indicating lack of bond at intersections of grid-core members are limited in number to four for every 40 sq. ft. of panel and limited in diameter to 3/64 inch.
   2. Fabricate with grid pattern that is symmetrical about centerlines of each panel.
   3. Fabricate panel to allow condensation within panel to escape.
   4. Reinforce panel corners.

2.6 ALUMINUM FINISHES

A. Clear Anodic Finish: AAMA 611, AA-M12C22A41, Class I, 0.018 mm or thicker.

PART 3 - EXECUTION

3.1 EXAMINATION

A. Examine areas and conditions, with Installer present, for compliance with requirements for installation tolerances and other conditions affecting performance of the Work.

B. Proceed with installation only after unsatisfactory conditions have been corrected.

3.2 INSTALLATION

A. General: Comply with manufacturer's written instructions.
   1. Do not install damaged components.
   2. Fit joints between aluminum components to produce hairline joints free of burrs and distortion.
   3. Rigidly secure nonmovement joints.
   4. Install anchors with separators and isolators to prevent metal corrosion, electrolytic deterioration, and immobilization of moving joints.
   5. Seal joints watertight unless otherwise indicated.

B. Metal Protection: Where aluminum components will contact dissimilar materials, protect against galvanic action by painting contact surfaces with corrosion-resistant coating or by installing nonconductive spacers as recommended in writing by manufacturer for this purpose.

C. Install components plumb and true in alignment with established lines and elevations.

D. Skylight Assemblies: Install continuous aluminum sill closures with weatherproof expansion joints and locked and sealed corners. Locate weep holes at rafters. Install components to drain water passing through joints and moisture migrating within assembly to exterior.

E. Erection Tolerances: Install panel assemblies to comply with the following maximum tolerances:
   1. Alignment: Limit offset from true alignment to 1/32 inch where surfaces abut in line, edge to edge, at corners, or where a reveal or protruding element separates aligned surfaces by less than 3 inches; otherwise, limit offset to 1/8 inch.
   2. Location and Plane: Limit variation from true location and plane to 1/8 inch in 12 feet, but no greater than 1/2 inch over total length.

END OF SECTION 08 45 23

SECTION 085213 – ALUMINUM CLAD WOOD WINDOWS

PART 1 - GENERAL

1.1 SUMMARY

A. Section includes aluminum-clad wood windows.

1.2 PREINSTALLATION MEETINGS

A. Preinstallation Conference: Conduct conference at Project site.
   1. Review and finalize construction schedule and verify availability of materials, Installer's personnel, equipment, and facilities needed to make progress and avoid delays.
   2. Review, discuss, and coordinate the interrelationship of wood windows with other exterior wall components. Include provisions for anchoring, flashing, weeping, sealing perimeters, and protecting finishes.
   3. Review and discuss the sequence of work required to construct a watertight and weathertight exterior building envelope.
   4. Inspect and discuss the condition of substrate and other preparatory work performed by other trades.

1.3 ACTION SUBMITTALS

A. Product Data: For each type of product.
   1. Include construction details, material descriptions, glazing and fabrication methods, dimensions of individual components and profiles, hardware, and finishes for wood windows.

B. Shop Drawings:
   1. Include plans, elevations, sections, hardware, accessories, insect screens, operational clearances, and details of installation, including anchor, flashing, and sealant installation.

C. Samples: For each exposed product and for each color specified, 2 by 4 inches in size.

D. Product Schedule: For wood windows. Use same designations indicated on Drawings.

1.4 INFORMATIONAL SUBMITTALS

A. Product Test Reports: For each type of wood window, for tests performed by a qualified testing agency.

B. Sample Warranties: For manufacturer's warranties.

1.5 QUALITY ASSURANCE

A. Manufacturer Qualifications: A manufacturer capable of fabricating wood windows that meet or exceed performance requirements indicated and of documenting this performance by test reports, and calculations.

B. Installer Qualifications: An installer acceptable to wood window manufacturer for installation of units required for this Project.

C. Mockups: Build mockups to verify selections made under Sample submittals, to demonstrate aesthetic effects, and to set quality standards for materials and execution.

1. Build mockup of typical wall area as shown on Drawings.
2. Approval of mockups does not constitute approval of deviations from the Contract Documents contained in mockups unless Architect specifically approves such deviations in writing.
3. Subject to compliance with requirements, approved mockups may become part of the completed Work if undisturbed at time of Substantial Completion.

1.6 WARRANTY

A. Manufacturer's Warranty: Manufacturer agrees to repair or replace wood windows that fail in materials or workmanship within specified warranty period.
   1. Failures include, but are not limited to, the following:
      a. Failure to meet performance requirements.
      b. Structural failures including excessive deflection, water leakage, and air infiltration.
      c. Faulty operation of movable sash and hardware.
      d. Deterioration of materials and finishes beyond normal weathering.
      e. Failure of insulating glass.
   2. Warranty Period:
      a. Window: Ten years from date of Substantial Completion.
      b. Glazing Units: Five years from date of Substantial Completion.
      c. Aluminum-Cladding Finish: Ten years from date of Substantial Completion.

PART 2 - PRODUCTS

2.1 MANUFACTURERS

A. Source Limitations: Obtain wood windows from single source from single manufacturer.

2.2 WINDOW PERFORMANCE REQUIREMENTS

A. Product Standard: Comply with AAMA/WDMA/CSA 101/I.S.2/A440 for definitions and minimum standards of performance, materials, components, accessories, and fabrication unless more stringent requirements are indicated.
   1. Window Certification: WDMA certified with label attached to each window.

B. Performance Class and Grade: AAMA/WDMA/CSA 101/I.S.2/A440 as follows:
   1. Minimum Performance Class: CW.
   2. Minimum Performance Grade: 30.

C. Unit energy performance:
   1. U-Factor = 0.38 for fixed sashes (max.)
   2. U-Factor = 0.40 for operable sashes (max.)
   3. Solar Heat-Gain Coefficient (SHGC) = 0.40 (max.)

2.3 ALUMINUM-CLAD WOOD WINDOWS

A. Basis of Design:
   1. Marvin: Signature Ultimate Clad Double Hung G2
   2. Pella: Architect Series, Traditional Wood, Clad LX

B. Subject to compliance with requirements, provide the named product or a comparable product by one of the following:
   1. Marvin Windows and Doors.
   2. Pella Corporation.
   3. Pozzi Custom Collection; JELD-WEN, Inc.

4. Windsor Windows & Doors.

C. Operating Types: Provide the following operating types in locations indicated on Drawings:
1. Single hung.
2. Double hung.
3. Fixed.

D. Frames and Sashes: Fine-grained wood lumber complying with AAMA/WDMA/CSA 101/I.S.2/A440; kiln dried to a moisture content of not more than 12 percent at time of fabrication; free of visible finger joints, blue stain, knots, pitch pockets, and surface checks larger than 1/32 inch deep by 2 inches wide; water-repellent preservative treated.
1. Exterior Finish: Aluminum-clad wood.
   a. Aluminum Finish: Manufacturer's standard high-performance organic finish.
   b. Color: As selected by Architect from manufacturer's full range.
2. Interior Finish: Manufacturer's standard factory-prime coat.

E. Glazing System: Manufacturer's standard factory-glazing system that produces weathertight seal.

F. Insulating Glass: Silicone-glazed 11/16-inch clear, low-E coated, insulating glass.
1. Basis of Design: Cardinal LowE 180; argon filled.
2. U-Factor: 0.26 (max.)
3. SHGC: 0.37 SHGC: 0.69 (max.)
4. VLT: 74 percent min.

G. Hardware, General: Provide manufacturer's standard hardware fabricated from aluminum, stainless steel, carbon steel complying with AAMA 907, or other corrosion-resistant material compatible with adjacent materials; designed to smoothly operate, tightly close, and securely lock windows, and sized to accommodate sash weight and dimensions.
1. Exposed Hardware Color and Finish: As selected by Architect from manufacturer's full range.

H. Hung Window Hardware:
1. Counterbalancing Mechanism: Complying with AAMA 902, concealed, of size and capacity to hold sash stationary at any open position.
2. Locks and Latches: Allow unobstructed movement of the sash across adjacent sash in direction indicated and operated from the inside only.
3. Tilt Hardware: Releasing tilt latch allows sash to pivot about horizontal axis to facilitate cleaning exterior surfaces from the interior.

I. Weather Stripping: Provide full-perimeter weather stripping for each operable sash unless otherwise indicated.

J. Fasteners: Noncorrosive and compatible with window members, trim, hardware, anchors, and other components.
1. Exposed Fasteners: Do not use exposed fasteners to greatest extent possible. For application of hardware, use fasteners that match finish hardware being fastened.

K. Limit Device (Window Opening Control Device): to restrict window opening to less than 4-inches in accordance with ASTM F2090-10 for window fall prevention standards.
1. Provide limit device on operable window units with sill heights of 36 inches or less above finished floor. (Lower sash only for double hung units.)
2. Factory applied hardware shall be recessed into the stiles of the top sash, strike place shall be mounted to the bottom sash check rail. Color shall match other hardware.

2.4 ACCESSORIES

A. Dividers (False Muntins): Provide divider grilles simulated divided lites with spacer bar (SDLS) in designs indicated for each sash lite.
   1. Basis of Design: Pella Corporation; Integral Light Technology Glazing and Grilles
      a. Insulating glass contains non-glare grid between panes of glass (grilles between the glass).
      b. Room Side Grilles: Solid 7/8-inch wide clear Pine.
      c. Exterior Grilles: Extruded aluminum; profile as selected by Architect. Configuration to match room side grilles.
      d. Bars shall be adhered to both sides of insulating glass with VHB acrylic adhesive tape and aligned with non-glare grid.
      e. Finish: Finish color to match interior and exterior finish colors.

B. Exterior Trim: Aluminum-clad trim matching window units of size and configuration indicated.

C. Insulating-Foam Sealant: Low-pressure, polyurethane window and door insulating-foam sealant;
   1. Dow Great Stuff Window & Door.

D. Anchors, Nail Fins, Clips, and Accessories: Aluminum, nonmagnetic stainless steel, or zinc-coated steel or iron complying with ASTM B 633 for SC 3 severe service conditions; provide sufficient strength to withstand design pressure indicated.

E. Reinforcing Members: Aluminum, or nonmagnetic stainless steel, or nickel/chrome-plated steel complying with ASTM B 456 for Type SC 3 severe service conditions, or zinc-coated steel or iron complying with ASTM B 633 for SC 3 severe service conditions; provide sufficient strength to withstand design pressure indicated.

2.5 INSECT SCREENS

A. General: Fabricate insect screens to integrate with window frame. Provide screen for each operable exterior sash. Screen wickets are not permitted.
   1. Type and Location: Full, outside for double-hung or Half, outside for single-hung sashes.

B. Aluminum Frames: Manufacturer's standard aluminum alloy complying with SMA 1004 or SMA 1201. Fabricate frames with mitered or coped joints or corner extrusions, concealed fasteners, and removable PVC spline/anchor concealing edge of frame.
   1. Tubular Framing Sections and Cross Braces: Roll formed from aluminum sheet.
   2. Finish for Exterior Screens: Baked-on organic coating in color selected by Architect from manufacturer's full range.

C. Glass-Fiber Mesh Fabric: 18-by-14 (1.1-by-1.4-mm) or 18-by-16 (1.0-by-1.1-mm) mesh of PVC-coated, glass-fiber threads; woven and fused to form a fabric mesh resistant to corrosion, shrinkage, stretch, impact damage, and weather deterioration. Comply with ASTM D 3656.
   1. Mesh Color: Manufacturer's standard.

2.6 FABRICATION

A. Fabricate wood windows in sizes indicated. Include a complete system for installing and anchoring windows.

B. Glaze wood windows in the factory.

C. Weather strip each operable sash to provide weathertight installation.

D. Mullions: Provide mullions and cover plates, matching window units, complete with anchors for support to structure and installation of window units. Allow for erection tolerances and provide for movement of window units due to thermal expansion and building deflections. Provide mullions and cover plates capable of withstanding design wind loads of window units.

E. Complete fabrication, assembly, finishing, hardware application, and other work in the factory to greatest extent possible. Disassemble components only as necessary for shipment and installation. Allow for scribing, trimming, and fitting at Project site.

PART 3 - EXECUTION

3.1 EXAMINATION

A. Examine openings, substrates, structural support, anchorage, and conditions, with Installer present, for compliance with requirements for installation tolerances and other conditions affecting performance of the Work.

B. Verify rough opening dimensions, levelness of sill plate, and operational clearances.
   1. Masonry Surfaces: Visibly dry and free of excess mortar, sand, and other construction debris.
   2. Wood Frame Walls: Dry, clean, sound, well nailed, free of voids, and without offsets at joints. Ensure that nail heads are driven flush with surfaces in opening and within 3 inches of opening.
   3. Metal Surfaces: Dry; clean; free of grease, oil, dirt, rust, corrosion, and welding slag; without sharp edges or offsets at joints.

C. Examine wall flashings, vapor retarders, water and weather barriers, and other built-in components to ensure weathertight window installation.

D. Proceed with installation only after unsatisfactory conditions have been corrected.

3.2 INSTALLATION

A. Comply with manufacturer's written instructions for installing windows, hardware, accessories, and other components. For installation procedures and requirements not addressed in manufacturer's written instructions, comply with installation requirements in ASTM E2112.

B. Install sill pan according to manufacturer’s installation instructions. Sill pan is in addition to flexible flashing provided as a part of the weather barrier system opening flashing.

C. Install windows level, plumb, square, true to line, without distortion, anchored securely in place to structural support, and in proper relation to wall flashing and other adjacent construction to produce weathertight construction.

D. Install windows to be weather-tight and freely operating.

E. Separate aluminum and other corrodible surfaces from sources of corrosion or electrolytic action (dissimilar materials, treated lumber, etc.) at points of contact with other materials.

F. For fin method of attachment, integrate window system installation with exterior weather-resistant barrier using flashing/sealant tape. Apply and integrate flashing/sealant tape with weather-resistant barrier using watershed principles in accordance with window manufacturer's instructions.

G. Place interior seal around window perimeter using insulating foam sealant to maintain continuity of building thermal and air barrier.

H. Seal window to exterior wall cladding with sealant and related backing materials at perimeter of assembly.

I. Leave window units closed and locked.

3.3 ADJUSTING, CLEANING, AND PROTECTION

A. Adjust operating sashes and ventilators, screens, hardware, and accessories for a tight fit at contact points and weather stripping for smooth operation and weathertight closure. Lubricate hardware and moving parts.

B. Clean exposed surfaces immediately after installing windows. Remove excess sealants, glazing materials, dirt, and other substances.
   1. Keep protective films and coverings in place until final cleaning.

C. Clean factory-glazed glass immediately after installing windows. Comply with manufacturer's written recommendations for final cleaning and maintenance. Remove nonpermanent labels, and clean surfaces.

D. Remove and replace sashes if glass has been broken, chipped, cracked, abraded, or damaged during construction period.

E. Protect window surfaces from contact with contaminating substances resulting from construction operations. If contaminating substances do contact window surfaces, remove contaminants immediately according to manufacturer's written instructions.

END OF SECTION 08 52 13

SECTION 08 71 00 - DOOR HARDWARE

PART 1 - GENERAL

1.1 SECTION INCLUDES

A. Hardware for wood doors.

B. Hardware for metal doors.

C. Thresholds, weather-stripping, seals and gasketing.

1.2 RELATED SECTIONS

A. Division 08 Section “Aluminum-Framed Entrances and Storefronts.”

B. Division 08 Section “Stile and Rail Wood Doors.”

1.3 REFERENCES

A. ANSI/ICC A117.1-American National Standard for Accessible and Usable Buildings and Facilities; International Code Council 1998

B. DHI (LOCS)-Recommended Locations for Architectural Hardware for Standard Steel Doors and Frames; Door and Hardware Institute; 1990

C. DHI WDHS.3-Recommended Locations for Architectural Hardware for Wood Flush Doors; Door and Hardware Institute; 1993

D. NFPA 80-Standard for Fire Doors and Windows; National Fire Protection Association; 1999

E. NFPA 101-Code for Safety to Life from Fire in Buildings and Structures; National Fire Protection Association; 2000

F. UBC Std. 7-2, Part II- Test Standard for Smoke and Draft Control Assemblies; International Conference of Building Officials; 1997

G. UL 10B-Fire Test of Door Assemblies; Underwriters Laboratories INC. (UL)

H. UL 10C-Positive Pressure Fire Tests of Door Assemblies; Underwriters Laboratories INC. (UL)

I. BHMA-Builders Hardware Manufacturers Association

J. UL (BMD)-Building Materials Directory; Underwriters Laboratories INC. (UL)

1.4 SUBMITTALS

A. Submittals:
   1. List all doors per set with opening number, opening location (both sides of door), hand, fire rating, size, material and any special features.
   2. List all hardware required for openings with quantity, description, product number, handing, finish and manufacturer.
   3. Include any special installation and operation instructions.

4. For electrical systems, include operational instructions, riser diagrams and point to point wiring diagrams.
5. Include manufacturer's catalogue information for all products listed.
6. Include any templates for door machining.
7. Supplier to visit project sight to verify all existing conditions for compatibility with any new hardware to be furnished before submitting submittals.

1.5 QUALITY ASSURANCE

A. Hardware supplier to be company specializing in supplying of commercial door hardware.

B. Hardware supplier to have a certified Architectural Hardware Consultant (AHC), as certified by the Door and Hardware Institute (DHI), as a full-time employee to oversee submittal completion and be available for consultation during the course of the project.

1.6 PRE-INSTALLATION MEETING

A. Installer and supplier to convene prior to commencing of installation of doors and hardware for any special installation instructions.

1.7 DELIVER, STORAGE AND PROTECTION

A. Package hardware items individually, label and identify each package with opening and set number to match hardware submittal.

B. Contractor to secure all delivered hardware in secure, dry location.

C. Supplier to deliver hardware to project sight or other locations as directed by contractor.

1.8 COORDINATION

A. Hardware supplier to verify cylinder type, finish, quantity etc. with any door supplier that hardware supplier is furnishing cylinders for.

B. Hardware supplier to verify voltage and amperage requirements with electrical contractor, fire alarm systems contractor and access control systems contractor.

C. Conduit and wiring provided by electrical contractor.

D. Hardware supplier to furnish any templates to door and frame manufactures and installers for door and frame preparation.

E. Sequence delivery, installation etc. to ensure utility connections and security are achieved in an orderly and expeditious manner.

F. Hardware supplier to coordinate keying requirements with owner.

G. Hardware supplier to visit project site to verify any existing conditions for compatibility with any new doors, frames and hardware.

1.9 MAINTENANCE

A. Contractor to retain and turn over to owner any special installation an adjustment tools furnished with the hardware.

B. Contractor to retain and turn over to owner any installation, adjustment and operational directions that are furnished with the hardware.

PART 2 - PRODUCTS

2.1 MANUFACTURERS

A. Hinges:
1. McKinney (MK)
2. Hager
3. Bommer
4. Hinges on outswing doors with keyed locks to have non-removable pins (NRP).
5. All hinges to have ball tip.
6. All wood screws for top hinge of each wood door to be 2½" long for both jamb and door leaf of hinge. Color to match hinge.

B. Mortise Locks:
1. Sargent (SA), 8200 Series, CER Design (Contemporary Escutcheon + Rockport lever handles)
2. Corbin/Russwin, ML2000 Series, Merlot Lever & R Escutcheon
3. Schlage L Series, M55 lever handle and 360L escutcheon
4. Furnish strikes with longer lips, as required for extended wood jambs.
5. Furnish proper thru bolts and fasteners for up to 2¼" thick doors.

C. Bored Auxiliary Locks:
1. Sargent (SA) 480 Series Deadbolt, thumb turn inside
2. Corbin/Russwin DL2200 Series
3. Schlage B-600 Series
4. Furnish strikes with longer lips, as required for extended wood jambs.
5. Furnish proper thru bolts and fasteners for up to 2¼" thick doors.

D. Astragals (for pairs of doors) surface mounted:
1. Pemko (PE) 375_R surface mounted overlapping astragal
2. McKinney
3. Reese
4. BHMA A156.22.

E. Cylinders:
1. Supplier to furnish cylinders to match each individual store so a store owner can have new cylinders keyed to their existing store key.
2. Furnish length as required for up to 2¼" thick doors.

F. Exit Devices (Exit Panic Devices) traditional look style:
1. Sargent (SA), 90 Series with Rockport lever handle.
2. Corbin/Russwin, ED3000 Series with Dirke B33 lever Series.
3. Von Duprin 55/88 Series with L trim and style 12 lever handle
4. Supplier to furnish any shims or brackets required for proper installation.
5. Cylinder dogging to be furnished with any non-rated and non-electrical exit device.
6. Furnish proper fasteners for up to 2¼" thick doors.

G. Surface Bolts:
1. Rockwood (RO)
2. Trimco
3. McKinney
4. Ives

H. Automatic and self-latching flush bolts:
   1. Automatic and Self-Latching Flush Bolts: BHMA A156.16; minimum 3/4-inch (19-mm) throw; designed for mortising into door edge. Include dust proof strike at threshold and strike plates on active leaf. Provide bolts at top and bottom of inactive leaf.
   2. Burns Manufacturing.
   3. Cal-Royal Products, Inc.
   4. Dorma.
   5. Ives (Ingersoll Rand / Allegion).
   6. Hager. 296W for wood doors.
   7. Rockwood (Assa Abloy).

I. Closers:
   1. Sargent (SA), 1431 Series
   2. Norton, 7500 Series.
   3. Corbin/Russwin, DC8000 Series
   4. LCN, 4110 Series
   5. Supplier to furnish all drop plates and mounting brackets as required for proper installation.
   6. Furnish arm type as noted in hardware sets.
   7. Install closers on side of door for least visibility, unless mounting is required for maximum door swing or protect closure from moisture or corrosive materials.
   8. Installer to properly adjust all hydraulic and spring adjustments for proper operation of closer and door.
   9. Contractor to check and adjust all closers when mechanical systems are in operation.
   10. All closers to have full plastic covers.
   11. Closer cylinder to be 1½” diameter.

J. Overhead coordinators:
   1. BHMA A156.3; consisting of active-leaf, hold-open lever and inactive-leaf release trigger; fabricated from steel with nylon-coated strike plates; with built-in, adjustable safety release.
   2. Architectural Buildings Hardware (ABH) Manufacturing Inc.
   3. Cal-Royal Products, Inc.
   4. Gylnn-Johnson (Ingersoll Rand / Allegion).
   5. Hager. 297D

K. Overhead Stops and Holders:
   1. BHMA A156.8.
   2. Allegion. (Glynn Johnson 90 Series Heavy Duty)
   3. Architectural Builders
   4. Rixson
   5. Assa Abloy (Sargent)

L. Protection Plates:
   1. Rockwood (RO)
   2. Trimco
   3. McKinney
   4. Ives
   5. Protection plates to be fastened with countersunk, oval head screws.
   6. Protection plates to be beveled on all four sides.
   7. Protection plate size as noted in hardware sets unless restricted by bottom rail of door.

M. Wall and Floor Stops:
   1. Rockwood (RO)
   2. Trimco
   3. McKinney
   4. Ives

5. Wall bumper shells to be cast brass or bronze.

N. Weatherstipping, Gasketing and Thresholds:
1. Pemko (PE)
2. McKinney
3. Reese
4. Any weatherstrip aluminum housing attached to metal surfaces to be attached with self-drilling TEK screws.
5. Any weatherstrip that is screw applied in an aluminum housing shall have the end fastening screw be 1” or less from the end of the aluminum housing. The hole for this end fastening screw to be drilled in field as required.
6. All fire rated doors are to meet UL10C, Positive Pressure Fire Testing, and are to be Category A doors with concealed intumescence furnished as required by the door manufacturer.
7. Any thresholds that project beyond the face of the door a half inch or more are to be furnished opening width plus four inches and coped around the face of the frame.

O. Silencers:
1. All silencers for hollow metal frames to be furnished and installed by frame supplier.
2. Silencers are not required at frames that are to have gasketing or weatherstripping installed.

2.2 GENERAL REQUIREMENTS FOR DOOR HARDWARE

A. Finishes:
1. Oil Rubbed Bronze (US10B), unless otherwise noted.
2. Closers to be painted dark bronze in color, unless otherwise noted.

B. Provide products that comply with the following:
1. Applicable provisions of Federal, State and Local Codes.
2. ANSI/ICC A117.1, American national Standard for Accessible and Usable Buildings and Facilities.
3. Applicable provisions of NFPA 101, Life Safety Code.
4. NFPA 80, Fire Rated Doors.
5. All hardware on fire rated doors to be listed and classified by UL as suitable for the purpose specified and indicated.
6. Electrical hardware to be listed and classified by UL as suitable for the purpose specified and indicated.
7. Hardware for positive pressure and smoke rated doors to comply with UBC Std. 7-2, Part II 1997 and UL 10C.

2.3 KEYING

A. Locks and cylinders to be keyed per building owner’s (or tenant’s) instructions.
1. Key to existing system upon request.
2. Key randomly unless instructed otherwise.

B. Furnish <u>two</u> copies of each key per cylinder, and deliver to building owner (or tenant).

C. Deliver all keys, with identifying tags and keying system, to owner (or tenant) or per owner’s instructions. Person receiving keys to sign for delivery of them, with a copy of the receipt to be kept by the receiver and supplier.

PART 3 - EXECUTION

3.1 EXAMINATION

A. Verify that all doors and frames are ready to receive door hardware as specified.

B. Verify that frames are level, plum and set at correct dimensional opening.

C. Verify that correct wire gauges are provided to supply correct electrical power to electrically operated devices.

D. Supplier to visit project sight to verify all existing conditions with contractor's representative.

3.2 INSTALLATION

A. Install hardware in accordance with manufacturer's instructions.

B. Use templates provided with hardware.

C. Install hardware on fire rated doors and frames in accordance with applicable codes and NFPA 80.

D. Mounting heights of hardware to be per DHI recommended locations and accessibility codes.

E. All fire rated doors are to meet UL10C, Positive Pressure Fire Testing, and are to be Category A doors with concealed intumescence furnished as required by the door manufacturer.

3.3 FIELD QUALITY CONTROL

A. Provide an Architectural Hardware Consultant to inspect installation and certify that hardware has been furnished and installed in accordance with manufacturer's instructions, applicable codes and as specified, as requested by the Architect.
   1. Architectural Hardware Consultant will inspect door hardware and state in each report whether installed work complies with or deviates from requirements, including whether door hardware is properly installed and adjusted.
   2. Reports shall be in a spreadsheet format, inclusive of all doors on the project, indicate opening number, condition of hardware including acceptable or deficient items, and status of deficiency correction.
   3. Reviews/reports: Perform initial and subsequent reviews as required to assure all work is corrected.
   4. Final Report: The AHC shall reconfirm deficiencies are corrected and submit an updated spreadsheet showing the status of completed for all items.

3.4 ADJUSTING

A. Adjust hardware for smooth and proper operation.

3.5 PROTECTION OF FINISHED WORK

A. Protect finished work under provisions of Section 01 73 00.

B. Do not permit adjacent work to damage hardware or other products.

3.6 BASIS OF DESIGN FOR HARDWARE SCHEDULE

Finishes:

For aluminum doors, match the aluminum door frame and storefront system.

For wood doors, match US10B (613) dark bronze.

Hinges: ..... McKinney: T4A 3386 x BT NRP 5”x5”
(heavy weight)

Mortise lock levers (dormitory/exit - wide stile) .....Sargent: 31 8225 CE R
(with Rockport Levers)

Mortise lock levers (dormitory/exit - narrow stile).....Adams Rite: 2190 small format
with Style 01 levers

Deadlock with interior thumb-turn..... Adams Rite: MS 1950 series
(narrow stile alum. door)

Exit panic (traditional mortise wide stile) .....Sargent: 9900 series
Function 13 (key outside unlocks/locks trim)
ET Trim with Rockport lever handle

Mortise auxiliary lock .....Sargent 4875 series mortise deadbolt
(interior thumb turn)

Lock cylinder.....if not already provided with hardware

Flush bolts top & bottom set (manual, metal).....(inactive leaf) Ives FB457/458 series

Surface bolts top & bottom set (manual, metal) ..... Rockwood 630 (24” top, 12” bottom)

Pull plate (traditional)..... Ives: 8311, 3½” x 15”

Push bar ..... Rockwood Manufacturing: 31-PB
3/8” x 5/4” flat stock

Door pull .....Rockwood Manufacturing: RM 5670
plain offset, 1” diameter, 12” long; plain ends

Closer (with selective hold open and stop).....Sargent: 1431 series CPSH

Floor stop & manual door holder (floor mounted with hook) .....Ives: FS450

Wall bumper (convex rubber) ..... Ives: WS406CVX

Protection plate (door or kick plate):..... Rockwood K1050 6” 4BE CSK

Surface T astragal: .....(inactive leaf) Pemko 355_S

Astragal brush gasketing..... (pair) Pemko: 18061_NB

Perimeter gasketing:..... Pemko: 303_S

Sweep (door bottom, brush gasketing) .....Pemko: 18061_NB

Threshold (5” thermal barrier saddle).....Pemko: 252X3AFG mill aluminum
(verify depth & length)

Mail Slot (glass door mounted).....C. R. Laurence Co.: MS125_ (2 ”x 11”)

Mail Slot (wood door mounted) ..... Salsbury Ind. mail slot wide #4045A antique finish

Signage UDBH: .... to read: “THIS DOOR TO REMAIN UNLOCKED WHEN BUILDING IS OCCUPIED.”
1” tall letters with contrasting background
decal, mount to glass approximately 5’ above floor line (verify)

3.7 HARDWARE SCHEDULE

Quantity *Description*

Set 1 existing single door **DOOR TO UPSTAIRS**

TYPE: WOOD DOOR IN WOOD FRAME

HANDING: LHR

3 .....HINGES

1 .....MORTISE LOCK LEVERS (DORMITORY/EXIT - WIDE STILE)

1 .....LOCK CYLINDER

1 .....CLOSER (WITH SELECTIVE HOLD OPEN AND STOP)

1 SET .....PERIMETER GASKETING

1 .....SWEEP (DOOR BOTTOM, BRUSH GASKETING)

1 .....THRESHOLD (5” THERMAL BARRIER SADDLE)

Set 2-14 existing single door **STORE ENTRANCE**

TYPE: WOOD DOOR IN WOOD FRAME

HANDING: LH

3 .....HINGES

1 .....MORTISE LOCK LEVERS (DORMITORY/EXIT - WIDE STILE)

1 .....LOCK CYLINDER

1 .....CLOSER (WITH SELECTIVE HOLD OPEN AND STOP)

1 SET .....PERIMETER GASKETING

1 .....SWEEP (DOOR BOTTOM, BRUSH GASKETING)

1 .....THRESHOLD (5” THERMAL BARRIER SADDLE)

Set 2-16 existing single door **STORE ENTRANCE**

TYPE: WOOD DOOR IN WOOD FRAME

HANDING: LH

3 .....HINGES

1 .....MORTISE LOCK LEVERS (DORMITORY/EXIT - WIDE STILE)

1 .....LOCK CYLINDER

1 .....CLOSER (WITH SELECTIVE HOLD OPEN AND STOP)

1 SET .....PERIMETER GASKETING

1 .....SWEEP (DOOR BOTTOM, BRUSH GASKETING)

1 .....THRESHOLD (5” THERMAL BARRIER SADDLE)

Set 2-18 existing single door **STORE ENTRANCE**

TYPE: WOOD DOOR IN WOOD FRAME

HANDING: RH

3 .....HINGES

1 .....MORTISE LOCK LEVERS (DORMITORY/EXIT - WIDE STILE)

1 .....LOCK CYLINDER

1 .....CLOSER (WITH SELECTIVE HOLD OPEN AND STOP)

1 SET .....PERIMETER GASKETING

1 .....SWEEP (DOOR BOTTOM, BRUSH GASKETING)

1 .....THRESHOLD (5” THERMAL BARRIER SADDLE)

Set 3A new single door **DOOR TO UPSTAIRS**

TYPE: ALUM DOOR IN ALUM FRAME

HANDING: LHR

3 .....HINGES

1 .....MORTISE LOCK LEVERS (DORMITORY/EXIT - WIDE STILE)

1 .....LOCK CYLINDER

1 .....CLOSER (WITH SELECTIVE HOLD OPEN AND STOP)

1 SET .....PERIMETER GASKETING

1 .....SWEEP (DOOR BOTTOM, BRUSH GASKETING)

1 .....THRESHOLD (5” THERMAL BARRIER SADDLE)

Set 3B new single door **BACK DOOR**

TYPE: ALUM DOOR IN ALUM FRAME

HANDING: RHR

3 .....HINGES

1 .....MORTISE LOCK LEVERS (DORMITORY/EXIT - WIDE STILE)

1 .....LOCK CYLINDER

1 .....CLOSER (WITH SELECTIVE HOLD OPEN AND STOP)

1 SET .....PERIMETER GASKETING

1 .....SWEEP (DOOR BOTTOM, BRUSH GASKETING)

1 .....THRESHOLD (5” THERMAL BARRIER SADDLE)

Set 5 existing single door **DOOR TO UPSTAIRS**

TYPE: WOOD DOOR IN WOOD FRAME

HANDING: LHR

3 .....HINGES

1 .....MORTISE LOCK LEVERS (DORMITORY/EXIT - WIDE STILE)

1 .....LOCK CYLINDER

1 .....CLOSER (WITH SELECTIVE HOLD OPEN AND STOP)

1 SET .....PERIMETER GASKETING

1 .....SWEEP (DOOR BOTTOM, BRUSH GASKETING)

1 .....THRESHOLD (5” THERMAL BARRIER SADDLE)

Set 6 new single door **STORE ENTRANCE**

TYPE: ALUM DOOR IN ALUM FRAME

HANDING: LHR

3 .....HINGES

1 .....MORTISE LOCK LEVERS (DORMITORY/EXIT - WIDE STILE)

1 .....LOCK CYLINDER

1 .....CLOSER (WITH SELECTIVE HOLD OPEN AND STOP)

1 SET .....PERIMETER GASKETING

1 .....SWEEP (DOOR BOTTOM, BRUSH GASKETING)

1 .....THRESHOLD (5” THERMAL BARRIER SADDLE)

Set 8A new single door **STORE ENTRANCE**

TYPE: WOOD DOOR IN WOOD FRAME

HANDING: LHR

3 .....HINGES

1 .....MORTISE LOCK LEVERS (DORMITORY/EXIT - WIDE STILE)

1 .....LOCK CYLINDER

1 .....CLOSER (WITH SELECTIVE HOLD OPEN AND STOP)

1 SET .....PERIMETER GASKETING

1 .....SWEEP (DOOR BOTTOM, BRUSH GASKETING)

1 .....THRESHOLD (5” THERMAL BARRIER SADDLE)

Set 8B new single door **DOOR TO UPSTAIRS**

TYPE: WOOD DOOR IN WOOD FRAME

HANDING: RHR

3 .....HINGES

1 .....MORTISE LOCK LEVERS (DORMITORY/EXIT - WIDE STILE)

1 .....LOCK CYLINDER

1 .....CLOSER (WITH SELECTIVE HOLD OPEN AND STOP)

1 SET .....PERIMETER GASKETING

1 .....SWEEP (DOOR BOTTOM, BRUSH GASKETING)

1 .....THRESHOLD (5” THERMAL BARRIER SADDLE)

END OF SECTION 08 71 00

SECTION 08 80 00 - GLAZING

PART 1 - GENERAL

1.1 SUMMARY

A. This Section includes glazing for the following products and applications, including those specified in other Sections where glazing requirements are specified by reference to this Section:
   1. Storefront windows.
   2. Windows.
   3. Doors.

B. This Section includes:
   1. Clear glass.
   2. Ceramic coated spandrel glass.

1.2 DEFINITIONS

A. Manufacturers of Glass Products: Firms that produce primary glass, fabricated glass, or both, as defined in referenced glazing publications.

B. Glass Thicknesses: Indicated by thickness designations in millimeters according to ASTM C 1036.

C. Interspace: Space between lites of an insulating-glass unit that contains dehydrated air or a specified gas.

D. Deterioration of Insulating Glass: Failure of hermetic seal under normal use that is attributed to the manufacturing process and not to causes other than glass breakage and practices for maintaining and cleaning insulating glass contrary to manufacturer's written instructions. Evidence of failure is the obstruction of vision by dust, moisture, or film on interior surfaces of glass.

1.3 PERFORMANCE REQUIREMENTS

A. General: Provide glazing systems capable of withstanding normal thermal movement and wind and impact loads (where applicable) without failure, including loss or glass breakage attributable to the following: defective manufacture, fabrication, and installation; failure of sealants or gaskets to remain watertight and airtight; deterioration of glazing materials; or other defects in construction.

B. Glass Design: Glass thickness designations indicated are minimums and are for detailing only. Confirm glass thicknesses by analyzing Project loads and in-service conditions. Provide glass lites in the thickness designations indicated for various size openings, but not less than thicknesses and in strengths (annealed or heat treated) required to meet or exceed the following criteria:
   1. Glass Thicknesses: Select minimum glass thicknesses to comply with ASTM E 1300, according to the following requirements:
      a. Specified Design Wind Loads: As indicated, but not less than wind loads applicable to Project as required by ASCE 7 "Minimum Design Loads for Buildings and Other Structures": Section 6.0 "Wind Loads."
      b. Probability of Breakage for Vertical Glazing: 8 lites per 1000 for lites set vertically or not more than 15 degrees off vertical and under wind action.

c. Maximum Lateral Deflection: For the following types of glass supported on all 4 edges, provide thickness required that limits center deflection at design wind pressure to 1/50 times the short side length or 1 inch, whichever is less.
   1) For monolithic-glass lites heat treated to resist wind loads.
   2) For insulating glass.
d. Minimum Glass Thickness: Not less than 6.0 mm.

C. Thermal Movements: Provide glazing that allows for thermal movements resulting from the following maximum change (range) in ambient and surface temperatures acting on glass framing members and glazing components. Base engineering calculation on surface temperatures of materials due to both solar heat gain and nighttime-sky heat loss.
   1. Temperature Change (Range): 120 deg F, ambient; 180 deg F, material surfaces.

1.4 SUBMITTALS

A. Product Data: For each glass product and glazing material indicated.

B. Samples: For the following products, in the form of 12-inch- square Samples for glass.
   1. Insulating glass for each designation indicated.

C. Glazing Schedule: Use same designations indicated on Drawings for glazed openings in preparing a schedule listing glass types and thicknesses for each size opening and location.

D. Product Certificates: Signed by manufacturers of glass and glazing products certifying that products furnished comply with requirements.
   1. For insulated glass units, provide documentation demonstrating that fabricator of insulated glass units is certified by primary glass manufacturer.

1.5 QUALITY ASSURANCE

A. Installer Qualifications: An experienced installer who has completed glazing similar in material, design, and extent to that indicated for this Project; whose work has resulted in glass installations with a record of successful in-service performance; and who employs glass installers for this Project who are certified under the National Glass Association's Certified Glass Installer Program.

B. Source Limitations for Glass: Obtain the following through one source from a single manufacturer for each glass type: clear float glass, laminated glass, fire-resistive glass, coated float glass, and insulating glass.

C. Source Limitations for Insulated Glass: Obtain insulated glass in fabricated units from a manufacturer that is certified by primary glass manufacturer.

D. Source Limitations for Glazing Accessories: Obtain glazing accessories through one source from a single manufacturer for each product and installation method indicated.

E. Glass Product Testing: Obtain glass test results for product test reports in "Submittals" Article from a qualified testing agency based on testing glass products.
   1. Glass Testing Agency Qualifications: An independent testing agency with the experience and capability to conduct the testing indicated, as documented according to ASTM E 548.

F. Elastomeric Glazing Sealant Product Testing: Obtain sealant test results for product test reports in "Submittals" Article from a qualified testing agency based on testing current sealant formulations within a 36-month period.

1. Sealant Testing Agency Qualifications: An independent testing agency qualified according to ASTM C 1021 to conduct the testing indicated, as documented according to ASTM E 548.
2. Test elastomeric glazing sealants for compliance with requirements specified by reference to ASTM C 920, and where applicable, to other standard test methods.

G. Safety Glazing Products: Comply with testing requirements in 16 CFR 1201.
1. Subject to compliance with requirements, obtain safety glazing products permanently marked with certification label of the Safety Glazing Certification Council or another certification agency or manufacturer acceptable to authorities having jurisdiction.
2. Where glazing units, including Kind FT glass and laminated glass, are specified in Part 2 articles for glazing lites more than 9 sq. ft. in exposed surface area of one side, provide glazing products that comply with Category II materials, for lites 9 sq. ft. or less in exposed surface area of one side, provide glazing products that comply with Category I or II materials, except for hazardous locations where Category II materials are required by 16 CFR 1201 and regulations of authorities having jurisdiction.

H. Glazing Publications: Comply with published recommendations of glass product manufacturers and organizations below, unless more stringent requirements are indicated. Refer to these publications for glazing terms not otherwise defined in this Section or in referenced standards.
1. GANA Publications: GANA Laminated Division's "Laminated Glass Design Guide" and GANA's "Glazing Manual."
2. IGMA Publication for Insulating Glass: SIGMA TM-3000, "Glazing Guidelines for Sealed Insulating Glass Units."

I. Insulating-Glass Certification Program: Permanently marked either on spacers or on at least one component lite of units with appropriate certification label of the following testing and inspecting agency:
1. Insulating Glass Certification Council.

1.6 DELIVERY, STORAGE, AND HANDLING

A. Protect glazing materials according to manufacturer's written instructions and as needed to prevent damage to glass and glazing materials from condensation, temperature changes, direct exposure to sun, or other causes.

1.7 COORDINATION AND SCHEDULING

A. Coordinate installation of anchorages for railings and glass panel partitions. Furnish setting drawings, templates, and directions for installing anchorages, including sleeves, concrete inserts, anchor bolts, and items with integral anchors, that are to be embedded in concrete or masonry. Deliver such items to Project site in time for installation.

1.8 PROJECT CONDITIONS

A. Environmental Limitations: Do not proceed with glazing when ambient and substrate temperature conditions are outside limits permitted by glazing material manufacturers and when glazing channel substrates are wet from rain, frost, condensation, or other causes.

1.9 WARRANTY

A. Manufacturer's Special Warranty for Coated-Glass Products: Manufacturer's standard form, made out to Owner and signed by coated-glass manufacturer agreeing to replace coated-glass units that deteriorate as defined in "Definitions" Article, f.o.b. the nearest shipping point to Project site, within specified warranty period indicated below.

1. Warranty Period: 10 years from date of Substantial Completion.

B. Manufacturer's Special Warranty on Insulating Glass: Manufacturer's standard form, made out to Owner and signed by insulating-glass manufacturer agreeing to replace insulating-glass units that deteriorate as defined in "Definitions" Article, f.o.b. the nearest shipping point to Project site, within specified warranty period indicated below.
   1. Warranty Period: 10 years from date of Substantial Completion.

PART 2 - PRODUCTS

2.1 GLASS PRODUCTS, GENERAL

A. Thickness: Where glass thickness is indicated, it is a minimum. Provide glass lites in thicknesses as needed to comply with specified performance requirements indicated.
   1. Minimum Glass Thickness: Not less than 6.0 mm (1/4 inch).

B. Strength: Where float glass is indicated, provide annealed float glass, Kind HS heat-treated float glass, or Kind FT heat-treated float glass as needed to comply with "Performance Requirements" Article. Where heat-strengthened glass is indicated, provide Kind HS heat-treated float glass or Kind FT heat-treated float glass as needed to comply with "Performance Requirements" Article. Where fully tempered glass is indicated, provide Kind FT heat-treated float glass.

C. Size: Provide products in sizes as indicated on the Drawings. Where the manufacturer requires heat treated or tempered glass to be used due to the size of the glass or the Insulated Glazing Unit, provide products as required by the manufacturer.

2.2 GLASS PRODUCTS

A. Clear Annealed Float Glass: ASTM C 1036, Type I, Class 1 (clear), Quality-Q3.

B. Clear Fully Tempered Float Glass: ASTM C 1048, Kind FT (fully tempered), Condition A (uncoated) unless otherwise indicated, Type I, Class 1 (clear) as indicated, Quality-Q3.
   1. Fabrication Process: By horizontal (roller-hearth) process with roll-wave distortion parallel to bottom edge of glass as installed unless otherwise indicated.

C. Clear Heat-Strengthened Float Glass: ASTM C 1048, Kind HS (heat strengthened), Type I, Condition A (uncoated) unless otherwise indicated, Type I, Class 1 (clear) as indicated, Quality-Q3.
   1. Fabrication Process: By horizontal (roller-hearth) process with roll-wave distortion parallel to bottom edge of glass as installed unless otherwise indicated.

D. Ceramic-Coated Spandrel Glass: ASTM C 1048, Type I, Condition B, Quality-Q3.

2.3 INSULATING GLASS

A. Manufacturers: Subject to compliance with requirements, manufacturers offering products that may be incorporated into the Work include, but are not limited to, the following:
   1. Cardinal Glass Industries
   2. Guardian Industries
   3. Oldcastle Glass
   4. Pilkington North America
   5. PPG Industries
   6. Viracon

B. Insulating-Glass Units, General: Factory-assembled units consisting of sealed lites of glass separated by a dehydrated interspace, qualified according to ASTM E 2190.
   1. Provide Kind HS (heat-strengthened) float glass in place of annealed glass where needed to resist thermal stresses induced by differential shading of individual glass lites and to comply with glass design requirements specified in "Performance Requirements" Article.
   2. Provide Kind FT (fully tempered) glass lites where indicated or where safety glass is required by code**,** or unless otherwise indicated.
   3. Overall Unit Thickness and Thickness of Each Lite: Dimensions indicated for insulating-glass units are nominal and the overall thicknesses of units are measured perpendicularly from outer surfaces of glass lites at unit's edge.
   4. Sealing System: Dual seal, with polyisobutylene and silicone primary and secondary sealants.
   5. Spacer: Stainless steel or nonmetallic.
   6. Desiccant: Molecular sieve or silica gel, or a blend of both.

C. Clear, Insulating-Glass Units, for use in wood or aluminum framed storefronts (IGU-1):
   1. Overall Unit Thickness: 25.4 mm (1 inch).
   2. Thickness of Each Lite: 6.0 mm (1/4 inch).
   3. Interspace Content: Air or Argon.
   4. Outdoor Lite: Class 1; clear float glass.
      a. Annealed, unless FT (fully tempered) is indicated or required by code.
   5. Indoor Lite: Class 1; clear float glass.
      a. Annealed, unless FT (fully tempered) is indicated or required by code.
   6. Solar Control Film: as specified in Division 08 Section “Solar Control Films.”
      a. Provide on glazing surface as specified.

D. Ceramic-Coated, Spandrel Insulating Glass Units (SIGU-1):
   1. Overall Unit Thickness: 25.4 mm (1 inch).
   2. Thickness of Each Lite: 6.0 mm (1/4 inch).
   3. Interspace Content: Air or Argon.
   4. Outdoor Lite: Class 1; clear float glass.
      a. Heat-strengthened, unless FT (fully tempered) is indicated or required by code.
   5. Indoor Lite: Ceramic Coated spandrel glass
      a. Provide Kind HS (heat strengthened), unless FT (fully tempered) is indicated or required by code.
      b. Ceramic Coating Location: Fourth Surface
      c. Color: As selected by Architect from manufacturer’s full range.

E. Clear, Insulating-Glass Units for use in wood or metal doors:
   1. Overall Unit Thickness: 16.0 mm (5/8 inch).
   2. Thickness of Each Lite: 5.0 mm (3/16 inch).
   3. Interspace Content: Argon.
   4. Outdoor Lite: Class 1; clear float glass.
      a. FT (fully tempered) as required by code.
   5. Indoor Lite: Class 1; clear float glass.
      a. FT (fully tempered) as required by code.
   6. Solar Control Film: as specified in Division 08 Section “Solar Control Films.” Install on glazing surface as specified.

F. Clear, Insulating-Glass Units for use in wood windows: as specified in Division 08 Section “Wood Windows.”

2.4 GLAZING GASKETS

A. Dense Compression Gaskets: Molded or extruded gaskets of material indicated below, complying with standards referenced with name of elastomer indicated below, and of profile and hardness required to maintain watertight seal:
   1. EPDM, ASTM C 864.
   2. Silicone, ASTM C 1115.
   3. Any material indicated above.

B. Soft Compression Gaskets: Extruded or molded, closed-cell, integral-skinned gaskets of material indicated below; complying with ASTM C 509, Type II, black; and of profile and hardness required to maintain watertight seal:
   1. EPDM.
   2. Silicone.
   3. Any material indicated above.

2.5 GLAZING SEALANTS

A. General: Provide products of type indicated, complying with the following requirements:
   1. Compatibility: Select glazing sealants that are compatible with one another and with other materials they will contact, including glass products, seals of insulating-glass units, and glazing channel substrates, under conditions of service and application, as demonstrated by sealant manufacturer based on testing and field experience.
   2. Suitability: Comply with sealant and glass manufacturers' written instructions for selecting glazing sealants suitable for applications indicated and for conditions existing at time of installation.
   3. Colors of Exposed Glazing Sealants: As indicated by manufacturer's designations.

B. Elastomeric Glazing Sealants: Comply with ASTM C 920 and other requirements indicated for each liquid-applied chemically curing sealant specified, including those referencing ASTM C 920 classifications for type, grade, class, and uses related to exposure and joint substrates.
   1. Class 25 Neutral-Curing Silicone Glazing Sealant:
      a. Available Products:
         1) Dow Corning Corporation; 795.
         2) Tremco; Tremsil 600.
      b. Type and Grade: S (single component) and NS (nonsag).
      c. Class: 25/50.
      d. Use Related to Exposure: NT (nontraffic).
      e. Uses Related to Glazing Substrates: G, A, and, as applicable to glazing substrates indicated, O.
         1) Use O Glazing Substrates: Coated glass.

2.6 GLAZING TAPES

A. Back-Bedding Mastic Glazing Tapes: Preformed, butyl-based elastomeric tape with a solids content of 100 percent; non-staining and nonmigrating in contact with nonporous surfaces; with or without spacer rod as recommended in writing by tape and glass manufacturers for application indicated; packaged on rolls with a release paper backing; and complying with ASTM C 1281 and AAMA 800 for products indicated below:
   1. AAMA 806.3 tape, for glazing applications in which tape is subject to continuous pressure.
   2. AAMA 807.3 tape, for glazing applications in which tape is not subject to continuous pressure.

2.7 MISCELLANEOUS GLAZING MATERIALS

A. General: Provide products of material, size, and shape complying with referenced glazing standard, requirements of manufacturers of glass and other glazing materials for application indicated, and with a proven record of compatibility with surfaces contacted in installation.

B. Cleaners, Primers, and Sealers: Types recommended by sealant or gasket manufacturer.

C. Setting Blocks: Elastomeric material with a Shore, Type A durometer hardness of 85, plus or minus 5.

D. Spacers: Elastomeric blocks or continuous extrusions with a Shore, Type A durometer hardness required by glass manufacturer to maintain glass lites in place for installation indicated.

E. Edge Blocks: Elastomeric material of hardness needed to limit glass lateral movement (side walking).

2.8 FABRICATION OF GLAZING UNITS

A. Fabricate glazing units in sizes required to glaze openings indicated for Project, with edge and face clearances, edge and surface conditions, and bite complying with written instructions of product manufacturer and referenced glazing publications, to comply with system performance requirements.

PART 3 - EXECUTION

3.1 EXAMINATION

A. Examine framing glazing, with Installer present, for compliance with the following:
   1. Manufacturing and installation tolerances, including those for size, squareness, and offsets at corners.
   2. Presence and functioning of weep system.
   3. Minimum required face or edge clearances.
   4. Effective sealing between joints of glass-framing members.

B. Proceed with installation only after unsatisfactory conditions have been corrected.

3.2 PREPARATION

A. Clean glazing channels and other framing members receiving glass immediately before glazing. Remove coatings not firmly bonded to substrates.

3.3 GLAZING, GENERAL

A. Comply with combined written instructions of manufacturers of glass, sealants, gaskets, and other glazing materials, unless more stringent requirements are indicated, including those in referenced glazing publications.

B. Glazing channel dimensions, as indicated on Drawings, provide necessary bite on glass, minimum edge and face clearances, and adequate sealant thicknesses, with reasonable tolerances. Adjust as required by Project conditions during installation.

C. Protect glass edges from damage during handling and installation. Remove damaged glass from Project site and legally dispose of off Project site. Damaged glass is glass with edge

damage or other imperfections that, when installed, could weaken glass and impair performance and appearance.

D. Apply primers to joint surfaces where required for adhesion of sealants, as determined by preconstruction sealant-substrate testing.

E. Install setting blocks in sill rabbets, sized and located to comply with referenced glazing publications, unless otherwise required by glass manufacturer. Set blocks in thin course of compatible sealant suitable for heel bead.

F. Do not exceed edge pressures stipulated by glass manufacturers for installing glass lites.

G. Provide spacers for glass lites where length plus width is larger than 50 inches as follows:
   1. Locate spacers directly opposite each other on both inside and outside faces of glass. Install correct size and spacing to preserve required face clearances, unless gaskets and glazing tapes are used that have demonstrated ability to maintain required face clearances and to comply with system performance requirements.
   2. Provide 1/8-inch minimum bite of spacers on glass and use thickness equal to sealant width. With glazing tape, use thickness slightly less than final compressed thickness of tape.

H. Provide edge blocking where indicated or needed to prevent glass lites from moving sideways in glazing channel, as recommended in writing by glass manufacturer and according to requirements in referenced glazing publications.

I. Set glass lites in each series with uniform pattern, draw, bow, and similar characteristics.

J. Where wedge-shaped gaskets are driven into one side of channel to pressurize sealant or gasket on opposite side, provide adequate anchorage so gasket cannot walk out when installation is subjected to movement.

K. Square cut wedge-shaped gaskets at corners and install gaskets in a manner recommended by gasket manufacturer to prevent corners from pulling away; seal corner joints and butt joints with sealant recommended by gasket manufacturer.

3.4 TAPE GLAZING

A. Position tapes on fixed stops so that, when compressed by glass, their exposed edges are flush with or protrude slightly above sightline of stops.

B. Install tapes continuously, but not necessarily in one continuous length. Do not stretch tapes to make them fit opening.

C. Cover vertical framing joints by applying tapes to heads and sills first and then to jambs. Cover horizontal framing joints by applying tapes to jambs and then to heads and sills.

D. Place joints in tapes at corners of opening with adjoining lengths butted together, not lapped. Seal joints in tapes with compatible sealant approved by tape manufacturer.

E. Do not remove release paper from tape until just before each glazing unit is installed.

F. Apply heel bead of elastomeric sealant.

G. Center glass lites in openings on setting blocks and press firmly against tape by inserting dense compression gaskets formed and installed to lock in place against faces of removable stops. Start gasket applications at corners and work toward centers of openings.

3.5 GASKET GLAZING (DRY)

A. Fabricate compression gaskets in lengths recommended by gasket manufacturer to fit openings exactly, with allowance for stretch during installation.

B. Insert soft compression gasket between glass and frame or fixed stop so it is securely in place with joints miter cut and bonded together at corners.

C. Center glass lites in openings on setting blocks and press firmly against soft compression gasket by inserting dense compression gaskets formed and installed to lock in place against faces of removable stops. Start gasket applications at corners and work toward centers of openings. Compress gaskets to produce a weathertight seal without developing bending stresses in glass. Seal gasket joints with sealant recommended by gasket manufacturer.

D. Install gaskets so they protrude past face of glazing stops.

3.6 SEALANT GLAZING (WET)

A. Install continuous spacers, or spacers combined with cylindrical sealant backing, between glass lites and glazing stops to maintain glass face clearances and to prevent sealant from extruding into glass channel and blocking weep systems until sealants cure. Secure spacers or spacers and backings in place and in position to control depth of installed sealant relative to edge clearance for optimum sealant performance.

B. Force sealants into glazing channels to eliminate voids and to ensure complete wetting or bond of sealant to glass and channel surfaces.

C. Tool exposed surfaces of sealants to provide a substantial wash away from glass.

3.7 CLEANING AND PROTECTION

A. Protect exterior glass from damage immediately after installation by attaching crossed streamers to framing held away from glass. Do not apply markers to glass surface. Remove nonpermanent labels, and clean surfaces.

B. Protect glass from contact with contaminating substances resulting from construction operations, including weld splatter. If, despite such protection, contaminating substances do come into contact with glass, remove substances immediately as recommended by glass manufacturer.

C. Examine glass surfaces adjacent to or below exterior concrete and other masonry surfaces at frequent intervals during construction, but not less than once a month, for buildup of dirt, scum, alkaline deposits, or stains; remove as recommended in writing by glass manufacturer.

D. Remove and replace glass that is broken, chipped, cracked, or abraded or that is damaged from natural causes, accidents, and vandalism, during construction period.

E. Wash glass on both exposed surfaces in each area of Project not more than four days before date scheduled for inspections that establish date of Substantial Completion. Wash glass as recommended in writing by glass manufacturer.

END OF SECTION 08 80 00

SECTION 08 81 13 - DECORATIVE GLASS GLAZING

PART 1 - GENERAL

1.1 SUMMARY

A. Section Includes:
   1. Decorative film overlay, used to obscure glass, typically producing a “frosted” or other patterned effect.

B. Related Requirements:
   1. Division 08 Section "Glazing.”

1.2 COORDINATION

A. Coordinate glazing channel dimensions to provide minimum edge and face clearances, and adequate sealant thicknesses, with reasonable tolerances.

1.3 PREINSTALLATION MEETINGS

A. Pre-installation Conference: Conduct conference at Project site.
   1. Review and finalize construction schedule and verify availability of materials, Installer's personnel, equipment, and facilities needed to make progress and avoid delays.
   2. Review temporary protection requirements for glazing during and after installation.

1.4 SUBMITTALS

A. Product Data: For each type of product.

B. Shop Drawings: For decorative glass. Show fabrication and installation details. Include the following:
   1. Decorative Glazing Schedule: List decorative glass types and thicknesses for each size opening and location. Use same designations indicated on Drawings.

C. Glazing Samples: For the following products, 12 inches square:
   1. Each type of decorative glazing.
   2. Each edge treatment on type of decorative glazing.
   3. Each decorative film overlay on type of decorative glazing.

1.5 CLOSEOUT SUBMITTALS

A. Maintenance Data: For each type of decorative film overlay to include in maintenance manuals.

1.6 DELIVERY, STORAGE, AND HANDLING

A. Protect decorative glass and glazing materials according to manufacturer's written instructions. Prevent damage to glass and glazing materials from condensation, temperature changes, direct exposure to sun, or other causes.

1.7 FIELD CONDITIONS

A. Environmental Limitations: Do not deliver or install decorative glass until spaces are enclosed and weathertight, wet work in spaces is complete and dry, and temporary HVAC system is

operating and maintaining ambient temperature and humidity conditions at occupancy levels during the remainder of the construction period.

B. Field Measurements: Verify actual dimensions of openings and construction contiguous with decorative glass by field measurements before fabrication and installation.

PART 2 - PRODUCTS

2.1 MANUFACTURERS

A. Source Limitations for Glazing Accessories: Obtain from single source from single manufacturer, for each product and installation method.

2.2 PERFORMANCE REQUIREMENTS

A. General Performance: Installed glazing systems shall withstand normal thermal movement and impact loads (where applicable) without failure, including loss or glass breakage attributable to the following: defective manufacture, fabrication, or installation; deterioration of glazing materials; or other defects in construction.

2.3 GLASS PRODUCTS, GENERAL

A. Glazing Publications: Comply with published recommendations of glass product manufacturers and "GANA's "Glazing Manual" unless more stringent requirements are indicated. See these publications for glazing terms not otherwise defined in this Section or in referenced standards.

2.4 FILM PRODUCTS

A. Decorative Film Overlay: Translucent, dimensionally stable, cast PVC film, 2-mil- minimum thickness, with pressure-sensitive, clear adhesive back for adhering to glass and releasable protective backing.
   1. Products: Subject to compliance with requirements, provide one of the following:
      a. Avery Dennison, Graphics.
      b. FDC Graphic Films, Inc.; Premium Frosted Etched Glass Vinyl Film Series 3500.
      c. 3M; Fasara Glass Finish, frost or matte, as selected by Architect.
   2. Use: Suitable for exterior and interior applications.
   3. Outdoor Durability: Not less than five years.
   4. Pattern: As selected by Architect from manufacturer's full range.

2.5 GLAZING MATERIALS

A. Glazing, Glazing Sealants, Tapes, and Miscellaneous Glazing Materials: As specified in Section 08 80 00 "Glazing."

2.6 DECORATIVE-GLASS FABRICATION

A. Decorative Film Overlay: Apply squarely aligned to glass edges, uniformly smooth, and free from tears, air bubbles, wrinkles, and rough edges, in pattern indicated on the back face of clean glass, according to manufacturer's written instructions, including surface preparation and application temperature limitations.

PART 3 - EXECUTION

3.1 EXAMINATION

A. Examine decorative-glass framing members, with Installer present, for compliance with the following:
   1. Manufacturing and installation tolerances, including those for size, squareness, and offsets at corners.
   2. Minimum required face or edge clearances.
   3. Effective sealing between joints of decorative-glass framing members.

B. Proceed with installation only after unsatisfactory conditions have been corrected.

3.2 PREPARATION

A. Clean glazing scheduled to receive film overlay according to manufacturer's written instructions immediately before installation.

3.3 INSTALLATION

A. Set decorative film overlay in locations indicated on Drawings.

3.4 GLAZING, GENERAL

A. Decorative Glass: Install glazing as specified in Section 08 80 00 "Glazing."

B. Comply with combined written instructions of manufacturers of glass, gaskets, sealants, tapes, and other glazing materials unless more stringent requirements are indicated, including those in referenced glazing publications.

3.5 CLEANING AND PROTECTION

A. Immediately after installation, remove nonpermanent labels and clean surfaces.

B. Protect glass from contact with contaminating substances resulting from construction operations. If, despite such protection, contaminating substances do come into contact with glass, remove substances immediately as recommended in writing by glass manufacturer.

C. Remove and replace glass that is damaged during construction period.

D. Wash glass on both exposed surfaces not more than four days before date scheduled for inspections that establish date of Substantial Completion. Wash glass as recommended in writing by glass manufacturer.

END OF SECTION 08 81 13

SECTION 08 87 13 – SOLAR CONTROL FILMS

PART 1 - GENERAL

1.1 SUMMARY

A. Section Includes:
   1. Film products applied to glass surfaces to impart solar control performance for solar heat and UV reduction, glare reduction, privacy, fade protection, or aesthetic characteristics.

B. Related Requirements:
   1. Division 08 Section "Glazing."

1.2 SUBMITTALS

A. Product Data: Submit product data, including manufacturer's data sheet, for specified products.

B. Samples: submit 8 x 8 inch samples of each specified film(s) applied to 1 pane of ultra-clear glass or insulated glazing unit and sample of ultra-clear glass or insulated glazing unit without film for comparison.

1.3 QUALITY ASSURANCE

A. Manufacturer Qualifications: Company experienced in manufacturing the product specified in this Section with minimum five years documented product development, testing, and manufacturing experience.

B. Installer Qualifications: Engage an experienced installer certified, licensed, or otherwise qualified by the film manufacturer as having the necessary experience, staff, and training to install manufacturer's products according to specified requirements.

C. Mockups: Apply glazing films in locations as directed to verify selections made under sample Submittals and to demonstrate aesthetic effects and qualities of materials and execution.
   1. Obtain approval of field samples before continuing with remainder of installation.
   2. Maintain field samples during remainder of installation in an undisturbed condition as a standard for judging the completed Work.
   3. Approved field samples may become part of the completed Work.

D. Pre-installation Conference: Before installing glazing films, conduct conference at Project site. Conduct pre-installation conference in conjunction with installation of mockup.
   1. Meet with Owner, Architect, glazing film Installer and glazing film manufacturer's representative.
   2. Review methods and procedures related to installation, including manufacturer's written instructions.
   3. Examine substrate conditions for compliance with requirements.
   4. Review temporary protection measures required during and after installation.
   5. Document proceedings, including corrective measures or actions required, and furnish copy of record to each participant.

1.4 WARRANTY

A. Manufacturer's standard warranty agreeing to replace films that fail within 10 years from date of original installation.

PART 2 - PRODUCTS

2.1 MANUFACTURERS

A. Manufacturers: Subject to compliance with requirements, provide products by one of the following:
   1. 3M
   2. Eastman Chemical Co.
   3. Saint-Gobain

2.2 PERFORMANCE

A. Clear, without tint.

B. Visible light transmissibility: greater than 73%.

C. Ultra-violet transmissibility: less than 1%.

D. Thickness shall be a minimum of 1.5 mils.

E. The inward facing surface shall have a factory applied, optically clear, abrasion resistant coating sufficient to protect against optical hazing as a result of washing and wiping.

F. The film shall have a factory installed, optically clear adhesive, protected with a silicone coated polyester release liner.

2.3 ACCESSORIES

A. General: Provide products complying with requirements of glazing film manufacturer for application indicated, and with a proven record of compatibility with surfaces contacted in installation.

B. Adhesive: Water activated, dry adhesive system that forms a molecular bond between the film and glass.
   1. Protect adhesive form contamination by applying a release liner that will be removed and discarded at installation.

C. Cleaners, Primers, and Sealers: Types recommended by glazing film manufacturer.

PART 3 - EXECUTION

3.1 EXAMINATION

A. Examine glass and surrounding adjacent surfaces for conditions affecting installation.
   1. Report conditions that may adversely affect installation. In report, include description of any glass that is broken, chipped, cracked, abraded, or damaged in any way.

B. Proceed with installation only after unsatisfactory conditions have been corrected.

C. Beginning of installation means acceptance of conditions.

3.2 PREPARATION

A. Comply with manufacturer's written instructions for surface preparation.

B. Immediately before beginning installation of films, clean glass surfaces of substances that could impair glazing film's bond, including mold, mildew, oil, grease, dirt and other foreign materials.

C. Protect window frames and surrounding conditions from damage during installation.

3.3 INSTALLATION

A. General: Comply with glazing film manufacturers' written installation instructions applicable to products and applications indicated, except where more stringent requirements apply.
   1. Install film continuously. Install with no gaps or overlaps. Overlay seams and butt seams shall not be permitted. Each pane of glass shall be filmed with a single sheet.
   2. Do not remove release liner from film until just before each piece of film is cut and ready for installation.
   3. Install film with mounting solution and custom cut to the glass with neat, square comers and edges to within 1/8 inch of the window frame.
   4. Remove air bubbles, wrinkles, blisters, and other defects.

B. As a measure of correct installation, when viewed against a bright, uniform sky, the applied film shall be optically clear with no distortion from a distance of 10 feet. Film shall appear uniform in appearance with no visible streaks, banding, thin spots or pinholes.
   1. If installed film does not meet these criteria, remove and replace with new film.

C. Install film on the interior (or inside) face of the glass or insulated glazing unit.

3.4 CLEANING

A. Remove excess mounting solution at finished seams, perimeter edges, and adjacent surfaces.

B. Use cleaning methods recommended by glazing film manufacturer.

C. Replace films that cannot be cleaned.

END OF SECTION 08 87 13

SECTION 09 01 20 – MAINTENANCE OF PLASTER AND STUCCO

PART 1 - GENERAL

1.1 SUMMARY

A. For the application of stucco to existing exterior masonry or for repairs.

B. Cleaning existing exterior stucco.

1.2 DEFINITIONS

A. Very Low-Pressure Spray: Under 100 psi.

B. Low-Pressure Spray: 100 to 400 psi.

C. Medium-Pressure Spray: 400 to 800 psi.

D. High-Pressure Spray: 800 to 1200 psi.

1.3 SUBMITTALS

A. Product Data: For each type of product indicated.

B. Samples of all specified materials as appropriate.

C. Install mortar samples on masonry—preferably on the building. Do not make samples in cups or apply to plywood or other non-masonry surfaces.

1.4 QUALITY ASSURANCE

A. Installer Qualifications: Installer who is approved by manufacturer for application of overlayment products required for this Project.

B. Pre-installation Conference: Conduct conference at Project site.

C. Mortar Samples: Prepare, install, and finish each sample repair according to the product data sheet instructions. All samples must be applied to masonry. Prepare samples in an area where they will be exposed to the same conditions as will be present on the building during curing. Allow samples to cure at least three days (or longer, if possible) before obtaining Owner's approval for color match. Mortar colors will continue to lighten as they cure and are exposed to the weather, so samples should be installed as far in advance as possible. A slightly darker color will give better long-term results. Samples should be viewed from a minimum distance of 18 to 22 feet.

D. Manufacturer recommends that only experienced stucco or plastering contractors, or trained stucco product applicators use material specified. Without knowledge of sufficient substrate saturation, the substrate might draw the moisture out of the product too quickly, and bond will not be achieved. Contact a technical representative of the product manufacturer for more assistance.

E. Cleaning Program: Prepare a written cleaning program for both buildings that describes cleaning process in detail, including materials, methods, and equipment to be used, protection of surrounding materials, and control of runoff during operations.

1. Perform the work in compliance with historic guidelines established by the Secretary of the Interior and Standards for the Treatment of Historic Properties, unless otherwise indicated. Notify Architect of any discrepancies that may exist.
2. If materials and methods other than those indicated are proposed for any phase of restoration work, add to the Quality-Control Program a written description of such materials and methods, including evidence of successful use on comparable projects, and demonstrations to show their effectiveness for this Project and worker's ability to use such materials and methods properly.

F. Cleaning and Repair Appearance Standard: Cleaned and repaired surfaces are to have a uniform appearance as viewed from 30 feet away by Architect. Perform additional paint and stain removal, general cleaning, and spot cleaning of small areas that are noticeably different, so that surface blends smoothly into surrounding areas.

1.5 DELIVERY, STORAGE, AND HANDLING

A. Store materials to comply with manufacturer's written instructions to prevent deterioration from moisture or other detrimental effects.

B. Materials are to be delivered, stored, and handled to protect them from damage, extreme temperature, and moisture in accordance with Manufacturer’s written instructions.

C. Deliver and store material in Manufacturer’s original, unopened containers with the production date shown on the container or packaging.

D. Comply with the Manufacturer’s written specifications and recommendations for mixing, application, and curing of mortars.

1.6 PROJECT CONDITIONS

A. Cold Weather Requirements: Do not work in temperatures below 40° F, when the substrate is colder than 40° F, or when the temperature is expected to fall below 40° F for 48 hours after installation of repair mortars. Building an enclosure and heating areas to maintain this temperature may only be done with the written approval of the Specifier.

B. Hot Weather Requirements: Protect repair mortar from direct sunlight and wind. Do not use or prepare mortar when ambient air temperature is above 90° F.

PART 2 - PRODUCTS

2.1 STUCCO REPAIR

A. JAHN M60 STUCCO/PLASTER MORTAR. Jahn Restoration Mortars are distributed by Cathedral Stone® Products, Inc., 7266 Park Circle Drive, Hanover, MD 21076; tel. (410) 782-9150; fax. (410) 782-9155; website: www.cathedralstone.com email: info@cathedralstone.com.

B. Mortars are premixed cementitious repair materials formulated to match the color and texture of the existing stucco/plaster, and do not contain any acrylic, latex, or other synthetic polymer additives. Mix the mortar with clean, potable water.

C. Substitutions: If proposed equal is submitted, lab test to establish equivalent performance levels. Use an independent testing laboratory, as determined by the Architect, and paid for by the submitting party.

D. Wire Lathe/Mesh: If wire lathe/mesh is desired, stainless steel wire lathe/mesh must be used. In addition, all anchors or attachments for the lathe/mesh must be stainless steel.

2.2 CLEANING MATERIALS

A. Water: Potable.

B. Hot Water: Water heated to a temperature of 140° to 160° F.

C. Job-Mixed Detergent Solution: Solution prepared by mixing 2 cups of tetrasodium polyphosphate, 1/2 cup of laundry detergent, and 20 quarts of hot water for every 5 gal. of solution required.

D. Job-Mixed Mold, Mildew, and Algae Remover: Solution prepared by mixing 2 cups of tetrasodium polyphosphate, 5 quarts of 5 percent sodium hypochlorite (bleach), and 15 quarts of hot water for every 5 gal. of solution required.

E. Nonacidic Liquid Cleaner: Manufacturer's standard mildly alkaline liquid cleaner formulated for removing mold, mildew, and other organic soiling from ordinary building materials, including polished stone, brick, aluminum, plastics, and wood.
   1. Products: Subject to compliance with requirements, provide the following available products that may be incorporated into the Work include, but are not limited to, the following:
      a. Diedrich Technologies Inc.; Diedrich 910PM Polished Marble Cleaner.
      b. Dominion Restoration Products, Inc.; Bio-Cleanse.
      c. Dumond Chemicals, Inc.; Safe n' Easy Architectural Cleaner/Restorer.
      d. Price Research, Ltd.; Price Non-Acid Masonry Cleaner.
      e. PROSOCO; Enviro Klean 2010 All Surface Cleaner.
      f. Cathedral Stone Products; Bio-Cleaner.

2.3 CHEMICAL CLEANING SOLUTIONS

A. Dilute chemical cleaners with water to produce solutions not exceeding concentration recommended by chemical-cleaner manufacturer.

PART 3 - EXECUTION

3.1 WORKMANSHIP

A. Do not use any additives, such as bonding agents, accelerators, or retardants in the mortar.

3.2 PROTECTION

A. Protect persons, motor vehicles, surrounding surfaces of building being restored and building site from harm resulting from masonry restoration work.

B. Comply with chemical-cleaner manufacturer's written instructions for protecting building and other surfaces against damage from exposure to its products. Prevent chemical-cleaning solutions from coming into contact with people, motor vehicles, landscaping, buildings, and other surfaces that could be harmed by such contact.
   1. Cover adjacent surfaces with materials that are proven to resist chemical cleaners used unless chemical cleaners being used will not damage adjacent surfaces. Use materials that contain only waterproof, UV-resistant adhesives. Apply masking agents to comply with manufacturer's written instructions. Do not apply liquid masking agent to painted or

porous surfaces. When no longer needed, promptly remove masking to prevent adhesive staining.

2. Keep wall wet below area being cleaned to prevent streaking from runoff.
3. Do not clean surfaces during winds of sufficient force to spread cleaning solutions to unprotected surfaces.
4. Neutralize and collect alkaline and acid wastes for disposal off Owner's property.
5. Dispose of runoff from cleaning operations by legal means and in a manner that prevents soil erosion, undermining of paving and foundations, damage to landscaping, and water penetration into building interiors.

3.3 PREPARATION FOR REPAIRS

A. Remove all existing loose stucco/plaster down to the substrate prior to installation of the stucco/plaster. “Sound” masonry with a hammer to verify its integrity. If necessary, cut away an additional 1/2” of the substrate to ensure the surface to be repaired is solid and stable. Remove any sealant residue.

B. Where cramp anchors, threaded rod anchors, or dowels have been cut and pieces remain embedded in the substrate: Anchors that are free of rust, solidly embedded may remain so long as they are covered with a minimum of ¾ inch of stucco/plaster. All others should be removed.

C. If repairing existing stucco/plaster, cut the edges of the repair area to provide a minimum depth of 1/2”. The edges of the repair should be square cut. Do not allow any feathered edges in the repair area.

D. Install mechanical anchors in all repair areas if specified on the Contract Drawing or as otherwise directed by the Specifier.

E. Install anchors as follows:
   1. Drill holes to diameter specified on Contract Drawing.
   2. Clean holes using compressed, oil-free air, and bristle brushes, until no dust cloud is produced when a brush, inserted the full depth of the hole, is pulled out of the hole.
   3. Embed anchors in back-up using mortar, mixed according to manufacturer’s instructions.
   4. Anchors should be covered with a minimum of ¾ inch repair material.

F. Clean all dust from surface and pores of the substrate, using clean water and a scrub brush.

G. For all surfaces, pre-wet the substrate ahead of time to prevent the substrate from drawing moisture out of the mortar too quickly. The substrate requires intensive presoaking prior to application of the mortar. Thoroughly presoak until saturated (Saturated Surface Dry or SSD).

3.4 MIXING MORTAR FOR REPAIR

A. It is recommended that a dust mask be worn during mixing. Do not mix more material than can be used within 30 minutes. Discard any mixed material that has been unused for 30 minutes or more.

B. Mixing ratio for stucco is approximately 4 parts powder to 1 part water by volume, depending on temperature and humidity. This ratio can be altered as needed to suit local conditions. (Verify with stucco manufacturer’s recommendations.)

C. Add water to dry ingredients and mix well. Adjust amount of water according to the weather and the porosity of the substrate.

3.5 APPLICATION OF REPAIR MATERIAL

A. Material can be applied by trowel in a single application, or lifts if desired. Minimum thickness of the stucco is 1/2 inch.

B. If applying stucco in lifts, additional surface preparation is required to maintain adhesion between layers. Scratch or brush and comb the surface of the initial coat to remove the cement skin formed during troweling. This will open the pores before an additional layer of material is applied. Then scratch again with a plasterer's comb to create more surface area for mechanical bonding. Apply the second coat 48 to 72 hours later; making sure the surface is properly presoaked.

3.6 FINISHING TECHNIQUES

A. The waiting period before finishing will vary, depending on wind, temperature and humidity. After initial set up, while the stucco/plaster is still workable, finish the surface with a dry sponge/float or wooden float to prevent surface map cracking of the material. Never use a damp sponge/float for final finishing. Final texture will vary depending on the float chosen for finishing.

B. Install faux joints, block lines, or historic tooling immediately after finishing while the stucco/plaster is still workable.

C. Clean any mortar residues from area surrounding the application/repair by sponging as many times as necessary with clean water. This should be done before repair material sets.

D. After the repair has been cured and allowed to dry for at least one week, if the appearance of a repair does not meet the specifications of the job, the surface color of the repair may be enhanced by applying a vapor permeable, mineral based pigmented stain approved by the stucco manufacturer.

3.7 CURING PROCEDURE

A. Lightly mist the repair with water to wet the entire surface of the finished repair approximately 30 minutes to 1 hour after completion on hot sunny days, and approximately 2 hours or longer, on cool or cloudy days. Time will vary with temperature and humidity. Mist several times a day on the three days following the repair installation. Should access to the repairs be impossible for a period, plastic may be used to cover them temporarily. The application of plastic, however, does not remove the need for normal curing techniques. Never cover repairs with plastic immediately after finishing the water in the repair will be trapped on the surface, causing it to lighten.

3.8 CLEAN UP, REPAIRS

A. Remove uncured mortar from the perimeter of the repair before it dries using clean water and a rubber sponge. Repeat several times with clean water to prevent a halo effect (staining of adjacent masonry). Cured mortar may only be removed chemically or mechanically.

B. Remove uncured mortar from tools and equipment with water as soon as possible. Cured material may only be removed chemically or mechanically.

3.9 CLEANING SURFACES, EXISTING, GENERAL

A. Proceed with cleaning in an orderly manner; work from bottom to top of each scaffold width and from one end of each elevation to the other. Ensure that dirty residues and rinse water will not wash over cleaned, dry surfaces.

B. Use only those cleaning methods indicated for each surface material and location.
   1. Do not use wire brushes or brushes that are not resistant to chemical cleaner being used. Do not use plastic-bristle brushes if natural-fiber brushes will resist chemical cleaner being used.
   2. Use spray equipment that provides controlled application at volume and pressure indicated, measured at spray tip. Adjust pressure and volume to ensure that cleaning methods do not damage masonry.
      a. Equip units with pressure gages.
   3. For chemical-cleaner spray application, use low-pressure tank or chemical pump suitable for chemical cleaner indicated, equipped with cone-shaped spray tip.
   4. For water-spray application, use fan-shaped spray tip that disperses water at an angle of 25 to 50 degrees.
   5. For heated water-spray application, use equipment capable of maintaining temperature between 140° and 160° F at flow rates indicated.
   6. For steam application, use steam generator capable of delivering live steam at nozzle.

C. Perform each cleaning method indicated in a manner that results in uniform coverage of all surfaces, including corners, moldings, and interstices, and that produces an even effect without streaking or damaging masonry surfaces.

D. Water Application Methods:
   1. Water-Soak Application: Soak masonry surfaces by applying water continuously and uniformly to limited area for time indicated. Apply water at low pressures and low volumes in multiple fine sprays using perforated hoses or multiple spray nozzles. Erect a protective enclosure constructed of polyethylene sheeting to cover area being sprayed.
   2. Water-Spray Applications: Unless otherwise indicated, hold spray nozzle at least 6 inches from surface of masonry and apply water in horizontal back and forth sweeping motion, overlapping previous strokes to produce uniform coverage.

E. Steam Cleaning: Apply steam to masonry surfaces at the very low pressures indicated for each type of masonry material. Hold nozzle at least 6 inches from surface of masonry and apply steam in horizontal back and forth sweeping motion, overlapping previous strokes to produce uniform coverage.

F. Chemical-Cleaner Application Methods: Apply chemical cleaners to masonry surfaces to comply with chemical-cleaner manufacturer's written instructions; use brush application. Do not spray apply at pressures exceeding 50 psi. Do not allow chemicals to remain on surface for periods longer than those indicated or recommended by manufacturer.

G. Rinse off chemical residue and soil by working upward from bottom to top of each treated area at each stage or scaffold setting. Periodically during each rinse, test pH of rinse water running off cleaned area to determine that chemical cleaner is completely removed.
   1. Apply neutralizing agent and repeat rinse if necessary, to produce tested pH of between 6.7 and 7.5.

H. After cleaning is complete, remove protection no longer required. Remove tape and adhesive marks.

3.10 PRELIMINARY CLEANING

A. Removing Plant Growth: Completely remove visible plant, moss, and shrub growth from surfaces. Carefully remove plants, creepers, and vegetation by cutting at roots and allowing to dry as long as possible before removal. Remove loose soil and debris from open masonry joints to whatever depth they occur.

B. Preliminary Cleaning: Before beginning general cleaning, remove extraneous substances that are resistant to cleaning methods being used. Extraneous substances include paint, calking, asphalt, and tar.

3.11 CLEANING PLASTER AND STUCCO

A. Hot-Water Wash: Use hot water applied by low-pressure spray.

B. Detergent Cleaning:
   1. Wet surfaces with cold water applied by low-pressure spray.
   2. Scrub surfaces with detergent solution using medium-soft brushes until soil is thoroughly dislodged and can be removed by rinsing. Use small brushes to remove soil from mortar joints and crevices. Dip brush in solution often to ensure that adequate fresh detergent is used and that surface remains wet.
   3. Rinse with hot water applied by low-pressure spray to remove detergent solution and soil.
   4. Repeat cleaning procedure above where required to produce cleaning effect established by mockup.

C. Mold, Mildew, and Algae Removal:
   1. Wet surfaces with cold water applied by low-pressure spray.
   2. Apply mold, mildew, and algae remover by brush or low-pressure spray.
   3. Scrub surfaces with medium-soft brushes until mold, mildew, and algae are thoroughly dislodged and can be removed by rinsing. Use small brushes for joints and crevices. Dip brush in mold, mildew, and algae remover often to ensure that adequate fresh cleaner is used and that surface remains wet.
   4. Rinse with hot water applied by low-pressure spray to remove mold, mildew, and algae remover and soil.

D. Nonacidic Liquid Chemical Cleaning:
   1. Wet surfaces with water applied by low-pressure spray.
   2. Apply cleaner to surface material in two applications by brush or low-pressure spray. Let cleaner remain on surface for period indicated below:
      a. As recommended by chemical-cleaner manufacturer.
      b. As established by mockup.
   3. Rinse with water applied by low-pressure spray to remove chemicals and soil.
   4. Repeat cleaning procedure above where required to produce cleaning effect established by mockup. Do not repeat more than once. If additional cleaning is required, use hot-water or steam cleaning.

END OF SECTION

SECTION 09 24 23 – PORTLAND CEMENT STUCCO

PART 1 - GENERAL

1.1 SUMMARY

A. Section includes direct-applied exterior finish system, including, but not limited to:
   1. Application of new, exterior cement-based stucco systems.
   2. Premixed, Portland cement based stucco base coat and finish coat.
   3. Metal trim and accessories.

1.2 REFERENCES

A. ASTM International (ASTM):
   1. C144 - Standard Specification for Aggregate for Masonry Mortar.
   2. C897 - Standard Specification for Aggregates for Job-Mixed Portland Cement Based Plasters.
   3. C932 - Standard Specification for Surface-Applied Bonding Compounds for Exterior Plastering.
   4. C1063 - Standard Specification for Installation of Lathing and Furring to Receive Interior and Exterior Portland Cement-Based Plaster.

B. National One Coat Stucco Association (NOCSA).

1.3 SUBMITTALS

A. Product Data: For each type of product indicated. Include manufacturer's technical information and application instructions.

B. Shop Drawings: Show locations and installation of control and expansion joints including plans, elevations, sections, details of components, and attachments to other work.

C. Samples for Verification: For each type of factory-prepared, colored, textured finish coat indicated; 12 by 12 inches, and prepared on rigid backing.

1.4 QUALITY ASSURANCE

A. Installer Qualifications: Minimum 2 years' experience in work of this Section.

B. Mockups: Before installing finish system, install mockups of at least 16 sq. ft. in surface area to demonstrate aesthetic effects and set quality standards for materials and execution.
   1. Install mockups for each type of finish indicated.
   2. Show plaster color and texture, trim, and overall workmanship.
   3. Simulate finished lighting conditions for review of mockups.
   4. Approved mockups may become part of the completed Work if undisturbed at time of Substantial Completion.
   5. Not Acceptable: Lines in stucco caused by variations in application or finishing techniques, cold joints, and other surface defects visible when viewed from a distance of 20 feet.

1.5 DELIVERY, STORAGE, AND HANDLING

A. Deliver materials in manufacturer's original, unopened contains bearing identifying labels.

B. Store materials inside under cover, off ground or floor, and keep them covered, dry and protected against damage from freezing, weather, direct sunlight, surface contamination, corrosion, construction traffic, and other causes.

C. Neatly stack sheathing panels flat to prevent sagging. Handle boards to prevent damage to edges, ends, and surfaces. Do not bend or otherwise damage metal corner beads and trim.

1.6 PROJECT CONDITIONS

A. Weather Limitations: Maintain ambient temperatures above 40° F for a minimum of 24 hours before, during, and after adhesives or coatings are applied. Do not apply adhesives or coatings during rainfall. Proceed with installation only when existing and forecasted weather conditions and ambient outdoor air, humidity, and substrate temperatures permit direct-applied exterior finish system to be applied, dried, and cured according to manufacturers' written instructions and warranty requirements.

B. Protect applied stucco from uneven and rapid evaporation during hot, dry, or windy weather by one of following methods:
   1. Fog surface with clean water.
   2. Cover with minimum 6 mil polyethylene film weighted or taped in place.

C. Factory-Prepared Finishes: Comply with manufacturer's written recommendations for environmental conditions for applying finishes.

PART 2 - PRODUCTS

2.1 MANUFACTURERS

A. Manufacturers: Subject to compliance with requirements, provide products by one of the following:
   1. Ash Grove packaging (1-kote)
   2. BASF Building Systems (Senergy)
   3. Dryvit Systems, Inc
   4. Eagle Building Materials
   5. Expo Stucco Products
   6. Formulated Solutions, LLC
   7. IMASCO Minerals, Inc
   8. Omega Products International (E-Z Wall)
   9. Prowall Building Products, Inc
   10. Quikrete
   11. Spec Mix, Inc
   12. Sto Corp

2.2 MATERIALS

A. Base Coat:
   1. Manufacturer’s standard premixed, concentrated one coat stucco base coat consisting of Portland cement, fibers, and proprietary ingredients.
   2. Sand: ASTM C144 or ASTM C897, natural or manufactured, uniformly graded.

B. Finish Coat:
   1. Type: Cement based colored stucco finish coat consisting of Portland cement, lime, graded aggregate, colorant, and proprietary ingredients.
   2. Color to be selected from manufacturer’s full color range.

3. Color-stabilizing spray: Fog coat in color to match finish coat, consisting of Portland cement, lime, graded aggregate, colorant, and proprietary ingredients.

C. Water: Potable.

D. Metal Trim and Accessories:
1. Material: Hot-dip galvanized steel, thickness to suit stucco thickness.
2. Corner bead: J-shaped metal, general purpose type, with expanded or perforated flanges.
3. Casing bead: [Square] [Rounded] profile, expanded or flanged to suit project conditions.
4. Control joint: Accordion profile with 1/4-inch slot.
5. Expansion joint: Adjustable type, free-floating, with adjustment from 1/4 to 5/8 inch.
6. Weep screed: Foundation sill screed, perforated for drainage.

2.3 ACCESSORIES

A. Fasteners:
1. Type and size suited to application, hot-dip galvanized steel.
2. Masonry backup: Minimum 1/2-inch penetration.

B. Tie Wire: 16-gage, galvanized steel, soft annealed.

C. Bonding Agent: ASTM C932; type recommended for bonding plaster directly to masonry surfaces.

2.4 MIXES

A. Mix materials in accordance with manufacturer's instructions.

B. Use mechanical mixer; hand mixing not permitted unless authorized in advance by Architect.

C. Mix each batch separately; double batching with single batch discharge not acceptable.

D. Accurately proportion materials for initial mixture using measuring devices of known volume.

E. Withhold 10 percent of water until mixing is nearly complete, then add remainder as required to achieve workable mix.

F. Clean mixing equipment after each batch.

G. Maintain mixer in continuous operation while adding materials.

H. Mixtures may be retempered one time after initial mixing.

I. Discard frozen, caked, and hardened mixes. Discard mixes not used within 60 minutes after initial mixing.

PART 3 - EXECUTION

3.1 PREPARATION

A. Protect adjacent work from soiling, spattering, moisture deterioration, and other harmful effects caused by plastering.

B. Clean substrate surfaces of oil, release agents, other deleterious materials, and loose and foreign matter.

C. Wet high suction bases with fine water spray to produce uniformly damp surface.

D. Apply bonding agent in accordance with manufacturer's instructions.

E. Verify that metal lath or wire mesh is tight, properly secured, and overlapped.

3.2 INSTALLATION, GENERAL

A. General: Install all materials in accordance with manufacturer's printed instructions, and to comply with governing regulations, specified standards, industry standards applicable to the Work, and to resist seismic loading and upward and downward wind forces as set forth by local building code.

3.3 INSTALLATION OF ACCESSORIES

A. General: Where feasible, use the same fasteners to anchor trim accessory flanges as required to fasten sheathing to the supports. Otherwise, fasten flanges to comply with manufacturer's recommendations.

B. Expansion Joints: In addition to the locations indicated on the drawings, provide at locations where dimensions would exceed 20'-0" in either direction.

3.4 INSTALLATION OF METAL TRIM

A. Install casing beads where stucco abuts dissimilar material or stops with edge exposed.

B. Install corner beads at external corners.

C. Install control joints
   1. Locate as follows unless otherwise indicated on Drawings:
      a. As required to limit each area of plaster to 144 square feet with no dimension exceeding 12 feet.
      b. Vertically above and below each side of openings.
      c. Horizontally at each floor line.
   2. Run vertical joints continuous; butt horizontal joints into vertical joints.
   3. Apply joint sealer to form water-stop behind joints at intersections.

D. Install expansion joints at locations indicated on Drawings.

E. Install weep screeds at bottom of wall, at each floor line, and at heads of openings in walls.

F. Set level and true to line. Wire tie to metal lath or wire mesh at maximum 12 inches on center. Screw to supports at maximum 12 inches on center.

3.5 APPLICATION OF BASE COAT

A. Apply base coat in accordance with manufacturer’s instructions.

B. Apply to minimum 3/8-inch thickness from face of concrete masonry.

C. Provide proper consolidation of base coat.

D. Rod surface to acceptable plane.

E. Float or lightly broom surface to provide bond with finish coat.

F. Work from wet edges to apply unbroken area in one continuous operation to eliminate joints.

G. Finish surfaces true to plane, plumb and with neat, sharp corners and intersections.

H. Work in panels to nearest natural break formed by intersections, corners, trim, and accessories.

I. Tool base coat to V-joint at trim, grounds and accessories.

J. The pattern of the substrate shall not be visible beneath the surface of the base coat. Leave surface smooth and flat. Allow base to cure for 24 hours before application of finish coat.

3.6 APPLICATION OF FINISH COAT

A. Apply finish coat in accordance with manufacturer's instructions.

B. Apply to minimum thickness recommended by manufacturer; using sufficient trowel pressure or spray velocity to bond finish coat to base coat.

C. Apply in number of coats required to produce consistent finish.

D. Provide smooth trowel texture to match approved mockup.

E. Work from wet edges to apply unbroken area in one continuous operation to eliminate joints.

F. Finish surfaces true to plane, plumb and with neat, sharp corners and intersections.

G. Work in panels to nearest natural break formed by intersections, corners, trim, and accessories.

H. Apply fog coat by brush, roller, or spray in number of coats required to produce consistent finish matching approved mockup.

I. Allow fog coat to dry, then mist with water twice daily for 2 days.

J. The finish system shall have a uniform color when cured. If color is mottled, take such steps as necessary or required to correct the color.

3.7 CURING

A. Moist cure Portland cement base coat [and finish coat] with fog spray of clean water applied at frequency to maintain stucco uniformly moist for 48 to 72 hours after application.

3.8 INSTALLATION TOLERANCES

A. Stucco: Maximum 1/8 inch in 5 feet variation from true flatness.

B. Trim: Maximum 1/4 inch in 10 feet variation from plumb, level, or true plane, noncumulative.

3.9 ADJUSTING

A. Repair or replace damaged, discolored, and defective work.

B. Blend patched areas to surrounding surfaces.

3.10 REPAIRS

A. Repair or replace work to eliminate cracks, dents, blisters, buckles, crazing and check cracking, dry outs, efflorescence, sweat outs, and similar defects and where bond to substrate has failed.

3.11 CLEANING AND PROTECTION

A. Clean stucco from trim and accessories before initial set occurs.

B. Remove temporary protection and enclosure of other work. Promptly remove plaster from doorframes, windows, and other surfaces not indicated to be plastered. Repair floors, walls, and other surfaces stained, marred, or otherwise damaged during application of direct-applied exterior finish system.

C. Provide final protection and maintain conditions, in a manner suitable to Installer, which ensures direct-applied exterior finish system being without damage or deterioration at time of Substantial Completion.

END OF SECTION 09 24 23

SECTION 09 30 13 - CERAMIC TILING

PART 1 - GENERAL

1.1 SUMMARY

A. Section Includes:
   1. Ceramic mosaic tile.
      a. Floor installation.
      b. Unglazed.
      c. Slip resistant.
      d. Exterior application.
      e. Wet environment.

1.2 DEFINITIONS

A. General: Definitions in the ANSI A108 series of tile installation standards and in ANSI A137.1 apply to Work of this Section unless otherwise specified.

B. ANSI A108 Series: ANSI A108.01, ANSI A108.02, ANSI A108.1A, ANSI A108.1B, ANSI A108.1C, ANSI A108.4, ANSI A108.5, ANSI A108.6, ANSI A108.8, ANSI A108.9, ANSI A108.10, ANSI A108.11, ANSI A108.12, ANSI A108.13, ANSI A108.14, ANSI A108.15, ANSI A108.16, and ANSI A108.17, which are contained in its "Specifications for Installation of Ceramic Tile."

C. Module Size: Actual tile size plus joint width indicated.

D. Face Size: Actual tile size, excluding spacer lugs.

1.3 PREINSTALLATION MEETINGS

A. Pre-installation Conference: Conduct conference at Project site.
   1. Review requirements in ANSI A108.01 for substrates and for preparation by other trades.

1.4 SUBMITTALS

A. Product Data: For each type of product.

B. Shop Drawings: Show locations of each type of tile and tile pattern. Show widths, details, and locations of expansion, contraction, control, and isolation joints in tile substrates and finished tile surfaces.

C. Samples for Initial Selection: For tile, grout, and accessories involving color selection.

1.5 MAINTENANCE MATERIAL SUBMITTALS

A. Furnish extra materials that match and are from same production runs as products installed and that are packaged with protective covering for storage and identified with labels describing contents.
   1. Tile and Trim Units: Furnish quantity of full-size units equal to 3 percent of amount installed for each type, composition, color, pattern, and size indicated.
   2. Grout: Furnish quantity of grout equal to 3 percent of amount installed for each type, composition, and color indicated.

1.6 QUALITY ASSURANCE

A. Installer Qualifications, meet at least one of the following:
   1. Installer is a five-star member of the National Tile Contractors Association or a Trowel of Excellence member of the Tile Contractors' Association of America.
   2. Installer's supervisor for Project holds the International Masonry Institute's Foreman Certification.
   3. Installer employs Ceramic Tile Education Foundation Certified Installers or installers recognized by the U.S. Department of Labor as Journeyman Tile Layers.

B. Mockups: Build mockups to verify selections made under Sample submittals and to demonstrate aesthetic effects and set quality standards for materials and execution.
   1. Build mockup of floor tile installation.
   2. Subject to compliance with requirements, approved mockups may become part of the completed Work if undisturbed at time of Substantial Completion.

1.7 DELIVERY, STORAGE, AND HANDLING

A. Deliver and store packaged materials in original containers with seals unbroken and labels intact until time of use. Comply with requirements in ANSI A137.1 for labeling tile packages.

B. Store tile and cementitious materials on elevated platforms, under cover, and in a dry location.

C. Store aggregates where grading and other required characteristics can be maintained and contamination can be avoided.

D. Store liquid materials in unopened containers and protected from freezing.

1.8 FIELD CONDITIONS

A. Environmental Limitations: Do not install tile until construction in spaces is complete and ambient temperature and humidity conditions are maintained at the levels indicated in referenced standards and manufacturer's written instructions.

PART 2 - PRODUCTS

2.1 MANUFACTURERS

A. Source Limitations for Tile: Obtain tile of each type and color or finish from single source or producer.
   1. Obtain tile of each type and color or finish from same production run and of consistent quality in appearance and physical properties for each contiguous area.

B. Source Limitations for Setting and Grouting Materials: Obtain ingredients of a uniform quality for each mortar, adhesive, and grout component from single manufacturer and each aggregate from single source or producer.
   1. Obtain setting and grouting materials, except for unmodified Portland cement and aggregate, from single manufacturer.
   2. Obtain waterproof membrane and crack isolation membrane, except for sheet products, from manufacturer of setting and grouting materials.

C. Source Limitations for Other Products: Obtain each of the following products specified in this Section from a single manufacturer:
   1. Waterproof membrane.
   2. Crack isolation membrane.

3. Cementitious backer units.

2.2 PRODUCTS, GENERAL

A. ANSI Ceramic Tile Standard: Provide tile that complies with ANSI A137.1 for types, compositions, and other characteristics indicated.
   1. Provide tile complying with Standard grade requirements.

B. ANSI Standards for Tile Installation Materials: Provide materials complying with ANSI A108.02, ANSI standards referenced in other Part 2 articles, ANSI standards referenced by TCNA installation methods specified in tile installation schedules, and other requirements specified.

C. Factory Blending: For tile exhibiting color variations within ranges, blend tile in factory and package so tile units taken from one package show same range in colors as those taken from other packages and match approved Samples.

D. Mounting: For factory-mounted tile, provide back- or edge-mounted tile assemblies as standard with manufacturer unless otherwise indicated.
   1. Where tile is indicated for installation on exteriors or in wet areas, do not use back- or edge-mounted tile assemblies unless tile manufacturer specifies in writing that this type of mounting is suitable for installation indicated and has a record of successful in-service performance.

2.3 TILE PRODUCTS

A. Ceramic Floor Tile (Mosaic Hex Tile): Factory-mounted unglazed ceramic mosaic tile.
   1. Basis of design: Daltile Keystones.
   2. Manufacturers: Subject to compliance with requirements, provide products by one of the following:
      a. American Olean (a division of Daltile).
      b. Daltile.
   3. Composition: Impervious natural clay or porcelain.
   4. Certification: Porcelain tile certified by the Porcelain Tile Certification Agency.
   5. Module Size: 1 by 1 inch, hexagon. (Unless otherwise noted.)
   6. Thickness: approximately 1/4 inch.
   7. Face: Plain with cushion edges.
   8. Surface: Slip resistant, with abrasive admixture.
   9. Dynamic Coefficient of Friction: Not less than 0.42.
   10. Tile Color and Pattern: basis of design, black and white mosaics, in the following pattern.

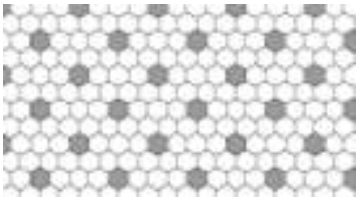

   11. Grout Color: As selected by Architect from manufacturer's full range.

2.4 CRACK ISOLATION MEMBRANE

A. General: Manufacturer's standard product that complies with ANSI A118.12 for high performance and is recommended by the manufacturer for the application indicated. Include reinforcement and accessories recommended by manufacturer.

2.5 SETTING MATERIALS

A. Portland Cement Mortar (Thickset) Installation Materials: ANSI A108.02.
   1. Cleavage Membrane: Asphalt felt, ASTM D 226/D 226M, Type I (No. 15); or polyethylene sheeting, ASTM D 4397, 4.0 mils thick.
   2. Reinforcing Wire Fabric: Galvanized, welded-wire fabric, 2 by 2 inches by 0.062-inch diameter; comply with ASTM A 185/A 185M and ASTM A 82/A 82M, except for minimum wire size.
   3. Latex Additive: Manufacturer's standard water emulsion, serving as replacement for part or all of gaging water, of type specifically recommended by latex-additive manufacturer for use with field-mixed portland cement and aggregate mortar bed.

B. Standard Dry-Set Mortar (Thinset): ANSI A118.1.

C. Modified Dry-Set Mortar (Thinset): ANSI A118.4.

D. Medium-Bed, Modified Dry-Set Mortar: Comply with requirements in ANSI A118.4. Provide product that is approved by manufacturer for application thickness of 5/8 inch.

E. Improved Modified Dry-Set Mortar (Thinset): ANSI A118.15.

2.6 GROUT MATERIALS

A. Sand-Portland Cement Grout: ANSI A108.10, consisting of white or gray cement and white or colored aggregate as required to produce color indicated.

B. High-Performance Tile Grout: ANSI A118.7.

2.7 MISCELLANEOUS MATERIALS

A. Trowelable Underlayments and Patching Compounds: Latex-modified, portland cement-based formulation provided or approved by manufacturer of tile-setting materials for installations indicated.

B. Vapor-Retarder Membrane: Polyethylene sheeting, ASTM D 4397, 4.0 mils thick.

2.8 MIXING MORTARS AND GROUT

A. Mix mortars and grouts to comply with referenced standards and mortar and grout manufacturers' written instructions.

B. Add materials, water, and additives in accurate proportions.

C. Obtain and use type of mixing equipment, mixer speeds, mixing containers, mixing time, and other procedures to produce mortars and grouts of uniform quality with optimum performance characteristics for installations indicated.

PART 3 - EXECUTION

3.1 EXAMINATION

A. Examine substrates, areas, and conditions where tile will be installed, with Installer present, for compliance with requirements for installation tolerances and other conditions affecting performance of the Work.

1. Verify that substrates for setting tile are firm; dry; clean; free of coatings that are incompatible with tile-setting materials, including curing compounds and other substances that contain soap, wax, oil, or silicone; and comply with flatness tolerances required by ANSI A108.01 for installations indicated.
2. Verify that concrete substrates for tile floors installed with adhesives, bonded mortar bed, or thinset mortar comply with surface finish requirements in ANSI A108.01 for installations indicated.
    a. Verify that surfaces that received a steel trowel finish have been mechanically scarified.
    b. Verify that protrusions, bumps, and ridges have been removed by sanding or grinding.
3. Verify that installation of grounds, anchors, recessed frames, electrical and mechanical units of work, and similar items located in or behind tile has been completed.
4. Verify that joints and cracks in tile substrates are coordinated with tile joint locations; if not coordinated, adjust joint locations in consultation with Architect.

B. Proceed with installation only after unsatisfactory conditions have been corrected.

3.2 PREPARATION

A. Fill cracks, holes, and depressions in concrete substrates for tile floors installed with adhesives or thinset mortar with trowelable leveling and patching compound specifically recommended by tile-setting material manufacturer.

B. Where indicated, prepare substrates to receive waterproofing by applying a reinforced mortar bed that complies with ANSI A108.1A and is sloped 1/4 inch per foot toward drains.

C. Blending: For tile exhibiting color variations, verify that tile has been factory blended and packaged so tile units taken from one package show same range of colors as those taken from other packages and match approved Samples. If not factory blended, either return to manufacturer or blend tiles at Project site before installing.

3.3 CERAMIC TILE INSTALLATION

A. Comply with TCNA's "Handbook for Ceramic, Glass, and Stone Tile Installation" for TCNA installation methods specified in tile installation schedules. Comply with parts of the ANSI A108 series "Specifications for Installation of Ceramic Tile" that are referenced in TCNA installation methods, specified in tile installation schedules, and apply to types of setting and grouting materials used.
    1. For the following installations, follow procedures in the ANSI A108 series of tile installation standards for providing 95 percent mortar coverage:
        a. Exterior tile floors and walls.
        b. Tile floors and walls in wet areas.

B. Extend tile work into recesses and under or behind equipment and fixtures to form complete covering without interruptions unless otherwise indicated. Terminate work neatly at obstructions, edges, and corners without disrupting pattern or joint alignments.

C. Accurately form intersections and returns. Perform cutting and drilling of tile without marring visible surfaces. Carefully grind cut edges of tile abutting trim, finish, or built-in items for straight aligned joints. Fit tile closely to electrical outlets, piping, fixtures, and other penetrations so plates, collars, or covers overlap tile.

D. Provide manufacturer's standard trim shapes where necessary to eliminate exposed tile edges.

E. Where accent tile differs in thickness from field tile, vary setting-bed thickness so that tiles are flush.

F. Jointing Pattern: Lay tile in grid pattern unless otherwise indicated. Lay out tile work and center tile fields in both directions in each space or on each wall area. Lay out tile work to minimize the use of pieces that are less than half of a tile. Provide uniform joint widths unless otherwise indicated.
   1. For tile mounted in sheets, make joints between tile sheets same width as joints within tile sheets so joints between sheets are not apparent in finished work.
   2. Where adjoining tiles on floor, base, walls, or trim are specified or indicated to be same size, align joints.
   3. Where tiles are specified or indicated to be whole integer multiples of adjoining tiles on floor, base, walls, or trim, align joints unless otherwise indicated.

G. Joint Widths: Unless otherwise indicated, install tile with the following joint widths:
   1. Ceramic Mosaic Tile: 1/8 inch.

H. Lay out tile wainscots to dimensions indicated or to next full tile beyond dimensions indicated.

I. Expansion Joints: Provide expansion joints and other sealant-filled joints, including control, contraction, and isolation joints, where indicated. Form joints during installation of setting materials, mortar beds, and tile. Do not saw-cut joints after installing tiles.
   1. Where joints occur in concrete substrates, locate joints in tile surfaces directly above them.

J. Floor Sealer: Apply floor sealer to cementitious grout joints in tile floors according to floor-sealer manufacturer's written instructions. As soon as floor sealer has penetrated grout joints, remove excess sealer and sealer from tile faces by wiping with soft cloth.

3.4 CRACK ISOLATION MEMBRANE INSTALLATION

A. Install crack isolation membrane to comply with ANSI A108.17 and manufacturer's written instructions to produce membrane of uniform thickness that is bonded securely to substrate.

B. Allow crack isolation membrane to cure before installing tile or setting materials over it.

3.5 ADJUSTING AND CLEANING

A. Remove and replace tile that is damaged or that does not match adjoining tile. Provide new matching units, installed as specified and in a manner to eliminate evidence of replacement.

B. Cleaning: On completion of placement and grouting, clean all ceramic tile surfaces so they are free of foreign matter.
   1. Remove grout residue from tile as soon as possible.
   2. Clean grout smears and haze from tile according to tile and grout manufacturer's written instructions but no sooner than 10 days after installation. Use only cleaners recommended by tile and grout manufacturers and only after determining that cleaners are safe to use by testing on samples of tile and other surfaces to be cleaned. Protect metal surfaces and plumbing fixtures from effects of cleaning. Flush surfaces with clean water before and after cleaning.

3.6 PROTECTION

A. Protect installed tile work with kraft paper or other heavy covering during construction period to prevent staining, damage, and wear. If recommended by tile manufacturer, apply coat of neutral protective cleaner to completed tile walls and floors.

B. Prohibit foot and wheel traffic from tiled floors for at least seven days after grouting is completed.

C. Before final inspection, remove protective coverings and rinse neutral protective cleaner from tile surfaces.

END OF SECTION 09 30 13

SECTION 09 91 00 – PAINTS AND COATINGS

PART 1 - GENERAL

1.1 SUMMARY

A. Section includes surface preparation and the application of interior and exterior paints, stains, and coatings systems.

1.2 SUBMITTALS

A. Product Data: For each type of product, including printed statement of VOC content. Include preparation requirements and application instructions.

B. Samples for Verification: For each type of paint system and in each color and gloss of topcoat.
   1. Submit Samples on rigid backing, 8 inches square.
   2. Step coats on Samples to show each coat required for system.
   3. Label each coat of each Sample.
   4. Label each Sample for location and application area.
   5. Wood Finishes: Submit three 3/4 x 3 x 6 inch Samples of each wood finish specified applied to wood of same species specified.

C. Product List: For each product indicated, include the following:
   1. Cross-reference to paint system and locations of application areas. Use same designations indicated on Drawings and in schedules.

1.3 QUALITY ASSURANCE

A. Mockups: Apply mockups of each paint system indicated and each color and finish selected to verify preliminary selections made under Sample submittals and to demonstrate aesthetic effects and set quality standards for materials and execution.
   1. Architect will select one surface to represent surfaces and conditions for application of each paint system specified in Part 3.
      a. Vertical and Horizontal Surfaces: Provide samples of at least 100 sq. ft.
      b. Other Items: Architect will designate items or areas required.
   2. Final approval of color selections will be based on mockups.
      a. If preliminary color selections are not approved, apply additional mockups of additional colors selected by Architect at no added cost to Owner.
   3. Approval of mockups does not constitute approval of deviations from the Contract Documents contained in mockups unless Architect specifically approves such deviations in writing.
   4. Subject to compliance with requirements, approved mockups may become part of the completed Work if undisturbed at time of Substantial Completion.

1.4 DELIVERY, STORAGE, AND HANDLING

A. Deliver products to site in sealed and labeled containers; inspect to verify acceptability.

B. Container Label: Include manufacturer's name, type of paint, brand name, lot number, brand code, coverage, surface preparation, drying time, cleanup requirements, color designation, and instructions for mixing and reducing.

C. Store materials not in use in tightly covered containers in well-ventilated areas with ambient temperatures continuously maintained at not less than 45° F and maximum of 90° F.

1. Maintain containers in clean condition, free of foreign materials and residue.
2. Remove rags and waste from storage areas daily.

D. Comply with OSHA standards and local fire regulations.

1.5 FIELD CONDITIONS

A. Apply paints only when temperature of surfaces to be painted and ambient air temperatures are between 50° and 95° F.

B. Do not apply paints in snow, rain, fog, or mist, when relative humidity exceeds 85 percent; at temperatures less than 5° F above the dew point; or to damp or wet surfaces.

C. Apply varnishes only when temperature of surfaces to be varnished and ambient air temperatures are not less than 65° F for interior or exterior applications, unless otherwise approved by manufacturer.

D. Provide lighting level of not less than 80 foot-candles measured mid-height at substrate surface.

E. Lead-Based Paint: Lead-based paint may be present on interior and exterior painted surfaces of the buildings. Renovation activities may result in exposure to lead. Perform lead-based paint removal and abatement and all renovation work affected by the presence of lead-based paint in compliance with state and Federal Occupational Safety and Health Administration (OSHA) requirements.
1. No lead-based paint abatement program will be performed by the Owner.
2. Sanding, stripping and refinishing operations on surfaces containing lead paint shall be performed in accordance with all regulatory rules and standards, including OSHA's Lead Standard for the Construction Industry (29 CFR 1926.62).
3. Legal disposal of lead-based paint waste is the responsibility of the contractor.
4. Reference the U.S. Department of the Interior, National Park Service Preservation Briefs #37 Appropriate Methods for Reducing Lead-Paint Hazards in Historic Housing at http://www.nps.gov/hps/tps/briefs/brief37.htm.

F. Contractor shall assume existing paints and coatings contain lead-based paint. If contractor testing reveals existing paints and coatings are not lead-based, the Owner may issue a Change Order to reduce costs of removal, disposal, and other associated costs.

PART 2 - PRODUCTS

2.1 MANUFACTURERS

A. Manufacturers: Subject to compliance with requirements, provide products by one of the following:
1. Benjamin Moore & Co.
2. Glidden Professional.
3. PPG Architectural Finishes, Inc.
4. Sherwin-Williams Company (The).
5. Diamond Vogel

2.2 PAINT, GENERAL

A. Material Compatibility:
1. Provide materials for use within each paint system that are compatible with one another and substrates indicated, under conditions of service and application as demonstrated by manufacturer, based on testing and field experience.

2. For each coat in a paint system, provide products recommended in writing by manufacturers of topcoat for use in paint system and on substrate indicated.

B. Colors: Match Architect's samples.

2.3 ACCESSORY MATERIALS

A. Accessory Materials: Linseed oil, shellac, turpentine, paint thinners and other materials not specifically indicated but required to achieve finishes specified; commercial quality.

B. Patching Materials: Latex filler.

C. Fastener Head Cover Materials: Latex filler.

2.4 PAINT AND COATING REMOVERS

A. Solvent-Type Paste Paint or Transparent-Finish Remover: Manufacturer's standard water-rinsable, solvent-type paste or gel formulation for removing paint or transparent finish from masonry, stone, wood, plaster, or metal as required to suit Project.
   1. Diedrich Technologies, Inc.
   2. Drummond Chemicals, Inc.
   3. PROSOCO, Inc.
   4. Restorco, Inc.
   5. Shore Corporation.

2.5 WOOD REPAIR MATERIALS

A. Wood Consolidant: Ready-to-use product designed to penetrate, consolidate, and strengthen soft fibers of wood materials that have deteriorated due to weathering and decay and designed specifically to enhance the bond of wood-patching compound to existing wood.
   1. Products: Subject to compliance with requirements, provide the following:
      a. Abatron, Inc.; LiquidWood.

B. Wood-Patching Compound: Two-part epoxy-resin wood-patching compound; knife-grade formulation as recommended by manufacturer for type of wood repair indicated, tooling time required for the detail of work, and site conditions. Compound shall be designed for filling voids in damaged wood materials that have deteriorated due to weathering and decay. Compound shall be capable of filling deep holes and spreading to feather edge.
   1. Products: Subject to compliance with requirements, provide the following:
      a. Abatron, Inc.; LiquidWood with WoodEpox.

2.6 SOURCE QUALITY CONTROL

A. Testing of Paint Materials: Owner reserves the right to invoke the following procedure:
   1. Owner may engage the services of a qualified testing agency to sample paint materials. Contractor will be notified in advance and may be present when samples are taken. If paint materials have already been delivered to Project site, samples may be taken at Project site. Samples will be identified, sealed, and certified by testing agency.
   2. Testing agency will perform tests for compliance with product requirements.
   3. Owner may direct Contractor to stop applying coatings if test results show materials being used do not comply with product requirements. Contractor shall remove noncomplying paint materials from Project site, pay for testing, and repaint surfaces painted with rejected materials. Contractor will be required to remove rejected materials from previously painted surfaces if, on repainting with complying materials, the two paints are incompatible.

PART 3 - EXECUTION

3.1 EXAMINATION

A. Examine substrates and conditions, with Applicator present, for compliance with requirements for maximum moisture content and other conditions affecting performance of the Work.

B. Maximum Moisture Content of Substrates: When measured with an electronic moisture meter as follows:
   1. Concrete: ..... 12 percent
   2. Masonry (Clay and CMU): ..... 12 percent
   3. Wood: ..... 15 percent
   4. Gypsum Board: ..... 12 percent
   5. Plaster: ..... 12 percent

C. Plaster Substrates: Verify that plaster is fully cured.

D. Verify suitability of substrates, including surface conditions and compatibility with existing finishes and field or shop-applied primers.

E. Proceed with coating application only after unsatisfactory conditions have been corrected.
   1. Application of coating indicates acceptance of surfaces and conditions.

3.2 PREPARATION

A. Comply with manufacturer's written instructions applicable to substrates indicated.

B. Remove hardware, covers, plates, and similar items already in place that are removable and are not to be painted. If removal is impractical or impossible because of size or weight of item, provide surface-applied protection before surface preparation and painting.
   1. After completing painting operations, use workers skilled in the trades involved to reinstall items that were removed. Remove surface-applied protection if any.

C. Surfaces: Correct defects and clean surfaces capable of affecting work of this section. Remove or repair existing coatings exhibiting surface defects.

D. Clean substrates of substances that could impair bond of paints, including dust, dirt, oil, grease, and incompatible paints and encapsulants.
   1. Remove incompatible primers and reprime substrate with compatible primers or apply tie coat as required to produce paint systems indicated.

E. Plaster Surfaces: Fill hairline cracks, small holes, and imperfections with latex patching plaster. Make smooth and flush with adjacent surfaces. Wash and neutralize high alkali surfaces.

F. Concrete Substrates: Remove release agents, curing compounds, efflorescence, and chalk. Use abrasive blast cleaning methods and surface profiling procedures recommended by the paint manufacturer. Do not paint surfaces if moisture content or alkalinity of surfaces to be painted exceeds that permitted in manufacturer's written instructions.

G. Masonry Substrates: Remove efflorescence and chalk. Do not paint surfaces if moisture content or alkalinity of surfaces or mortar joints exceed that permitted in manufacturer's written instructions.

H. Steel Substrates: Remove rust, grease, mill scale, weld splatter, and dirt, ensuring weld joints, bolts, and nuts are similarly cleaned. Clean using methods recommended in writing by paint manufacturer but not less than the following:
   1. SSPC-SP 3, "Power Tool Cleaning."

I. Shop-Primed Steel Substrates: Sand and scrape to remove loose primer and rust. Clean field welds, bolted connections, and abraded areas of shop paint, and paint exposed areas with the same material as used for shop priming to comply with SSPC-PA 1 for touching up shop-primed surfaces.
   1. Feather edges to make touch-up patches inconspicuous.

J. Galvanized-Metal Substrates: Remove grease and oil residue from galvanized sheet metal fabricated from coil stock by mechanical methods to produce clean, lightly etched surfaces that promote adhesion of subsequently applied paints.

K. Aluminum Substrates: Remove loose surface oxidation.

L. Wood Substrates – Paint Finish:
   1. Scrape and clean knots, and apply coat of knot sealer recommended in writing by topcoat manufacturer for applicable exposure before applying primer.
   2. Sand surfaces that will be exposed to view, and dust off.
   3. Prime edges, ends, faces, undersides, and backsides of wood.
   4. After priming, fill holes and imperfections in the finish surfaces with putty or plastic wood filler. Sand smooth when dried.

M. Wood Substrates - Transparent Finish: Remove dust, grit, and foreign matter; seal knots, pitch streaks, and sappy sections with sealer. Fill nail holes with tinted caulking compound after sealer has been applied.

3.3 EXISTING SUBSTRATES

A. For previously painted surfaces, remove surface grime by washing with detergent, TSP or sal soda solution. Rinse thoroughly with clean water until all residue is removed. Sand glossy surfaces to improve bond for new coats of paint. Scrap or use a wire brush to remove loose paint and blisters. Sand edges of chips and blisters.

B. Extend existing paint and coatings installations using materials and methods compatible with existing installations and as specified.

C. Existing Surfaces Scheduled to Receive Paint Finish:
   1. Perform paint removal, preparation, cleaning and neutralizing procedures in accordance with regulatory requirements and paint removal manufacturer's printed instructions.
   2. Remove hardware, hardware accessories, machined surfaces, and similar items in place and not to be finish painted or provide surface applied protection prior to surface preparation and painting operations. Remove, if necessary, for complete painting of items and adjacent surfaces. Following completion of painting of each space or area, reinstall removed items.
   3. Remove existing paint coatings by chemical strippers, heat (no burning allowed), and scrapping and sanding.
   4. Completely remove existing paint to bare substrate.
   5. Remove all chemical paint remover residue and neutralize prior to painting.
   6. Clean surfaces to be painted before applying paint or surface treatments. Remove oil and grease prior to mechanical cleaning. Program cleaning and painting so that contaminants from cleaning process will not fall onto wet, newly painted surfaces.

D. Patching and Filling – Wood for Opaque Finish:
   1. General: Patch surfaces that are damaged and exhibit depressions, holes, or similar voids, and that have limited rotted or decayed material.
      a. Verify that surfaces are sufficiently clean and free of paint residue prior to patching.
      b. Treat wood members with wood consolidant prior to application of patching compound. Coat wood surfaces by brushing, applying multiple coats until wood is saturated and refuses to absorb more. Allow treatment to harden before filling void with patching compound.
      c. Remove rotted or decayed wood down to sound wood.
   2. Apply borate preservative treatment to accessible surfaces either before applying wood consolidant or after removing rotted or decayed wood. Apply treatment liberally by brush to joints, edges, and ends; top, sides, and bottom.
   3. Apply wood-patching compound to fill depressions, nicks, cracks, and other voids created by removed or missing wood.
      a. Prime patch area with application of wood consolidant or manufacturer's recommended primer.
      b. Mix only as much patching compound as can be applied according to manufacturer's written instructions.
      c. Apply patching compound in layers as recommended by manufacturer until the void is completely filled.
      d. Finish patch surface to match contour of adjacent wood member. Sand patching compound smooth and flush, matching contour of existing wood member.
      e. Clean spilled compound from adjacent materials immediately.

3.4 APPLICATION

A. Apply paints according to manufacturer's written instructions.
   1. Use applicators and techniques suited for paint and substrate indicated.
   2. Paint surfaces behind movable equipment and furniture same as similar exposed surfaces. Before final installation, paint surfaces behind permanently fixed equipment or furniture with prime coat only.
   3. Paint front and backsides of access panels, removable or hinged covers, and similar hinged items to match exposed surfaces.
   4. Paint entire exposed surface of window frames and sashes.
   5. Do not paint over labels of independent testing agencies or equipment name, identification, performance rating, or nomenclature plates.
   6. Primers specified in painting schedules may be omitted on items that are factory primed or factory finished if acceptable to topcoat manufacturers.
   7. Sand wood and metal surfaces lightly between coats to achieve required finish.
   8. Vacuum clean surfaces of loose particles. Use tack cloth to remove dust and particles just prior to applying next coat.
   9. Where clear finishes are required, tint fillers to match wood. Work fillers into grain before set. Wipe excess from surface.
   10. Prime concealed surfaces of interior and exterior woodwork with primer paint.
   11. Prime concealed surfaces of interior wood surfaces scheduled to receive stain or varnish finish with gloss varnish reduced 25 percent with thinner.

B. Tint each undercoat a lighter shade to facilitate identification of each coat if multiple coats of same material are to be applied. Tint undercoats to match color of topcoat, but provide sufficient difference in shade of undercoats to distinguish each separate coat.

C. Minimum Coating Thickness: Apply materials at not less than the manufacturer's recommended spreading rate. Provide a total dry film thickness of the entire system as recommended by the manufacturer.

1. If undercoats or other conditions show through topcoat, apply additional coats until cured film has a uniform paint finish, color, and appearance.

D. Apply paints to produce surface films without cloudiness, spotting, holidays, laps, brush marks, roller tracking, runs, sags, ropiness, or other surface imperfections. Cut in sharp lines and color breaks.

E. Concrete masonry that is coated with an epoxy finish shall have a pinhole free surface as final surface finish.

F. Painting Fire Suppression, Plumbing, HVAC, Electrical, Communication, and Electronic Safety and Security Work:
   1. Paint shop primed equipment indicated to receive paint finish.
   2. Remove unfinished louvers, grilles, covers, and access panels on mechanical and electrical components and paint separately.
   3. Prime and paint insulated and exposed pipes, conduit, boxes, insulated and exposed ducts, hangers, brackets, collars and supports, except where items are shop finished or occurring in unfinished interior spaces.
   4. Paint interior surfaces of air ducts and convector and baseboard heating cabinets visible through grilles and louvers with one coat of flat black paint applied to visible surfaces. Paint dampers exposed behind louvers, grilles, and convector and baseboard cabinets to match face panels.
   5. Paint exposed conduit and electrical equipment occurring in finished areas.
   6. Paint both sides and edges of plywood backboards for electrical and telephone equipment before installing equipment.
   7. Reinstall electrical cover plates, hardware, light fixture trim, escutcheons, and fittings removed prior to finishing.
   8. Do not paint over telecommunications cables or detection or monitoring devices.

3.5 FIELD QUALITY CONTROL

A. Dry Film Thickness Testing: Owner may engage the services of a qualified testing and inspecting agency to inspect and test paint for dry film thickness.
   1. Contractor shall touch up and restore painted surfaces damaged by testing.
   2. If test results show that dry film thickness of applied paint does not comply with paint manufacturer's written recommendations, Contractor shall pay for testing and apply additional coats as needed to provide dry film thickness that complies with paint manufacturer's written recommendations.

3.6 CLEANING AND PROTECTION

A. At end of each workday, remove rubbish, empty cans, rags, and other discarded materials from Project site.

B. After completing paint application, clean spattered surfaces. Remove spattered paints by washing, scraping, or other methods. Do not scratch or damage adjacent finished surfaces.

C. Protect work of other trades against damage from paint application. Correct damage to work of other trades by cleaning, repairing, replacing, and refinishing, as approved by Architect, and leave in an undamaged condition.

D. At completion of construction activities of other trades, touch up and restore damaged or defaced painted surfaces.

3.7 EXTERIOR PAINTING SCHEDULE

A. Aluminum Substrates: High performance acrylic coating; two (2) finish coats over prime coat.
   1. Prime Coat:
      a. Glidden Professional; Devoe Coatings Dev Flex Acrylic Primer Finish, 4020
      b. PPG; Pitt Tech Plus Primer, 90-912.
      c. Sherwin-Williams; Pro Industrial Pro-Cryl Universal Primer, B66-310 Series.
      d. Diamond Vogel; Vers-Acryl 303 Acrylic DTM Primer/Finish Mid-Sheen
   2. Finish Coat:
      a. Glidden Professional; Devoe Coatings Dev Flex 4216HP.
      b. PPG; Pitt-Tech Plus. Semi-Gloss, 90-1210 Series.
      c. Sherwin-Williams; Sher-Cryl HPA, Semi-Gloss, B66-350 Series
      d. Diamond Vogel; Finium DTM-AT Acrylic Semi-Gloss

B. Brick Masonry Stain: Penetrating, semi-transparent masonry stain. Apply two finish coats.
   1. Prime Coat: Tnemec; Series 662 Prime A Pell Plus at 100-125 sq. ft. per gallon
   2. Finish Coat: Tnemec; Conformal Stain Series 607 at 125-175 sq. ft. per gallon per coat.

C. Concrete, Stucco, Brick: Acrylic coating; two (2) finish coats over prime coat.
   1. Prime Coat:
      a. Glidden Professional; Hydro Sealer Primer Sealer, 6001.
      b. PPG Paints; Perma-Crete Concrete Block & Masonry Surfacer/Filler, 4-100 XI.
      c. Sherwin-Williams; Loxon Block Surfacer, A24W200.
      d. Diamond Vogel; Dia Pro Acrylic Block Filler
   2. Finish Coats:
      a. Glidden Professional; Fortis 450 Exterior Acrylic Satin, 6403.
      b. PPG Paints; Manor Hall Timeless Satin, 73-410.
      c. Sherwin-Williams; Emerald Exterior Acrylic Satin, K48 Series.
      d. Diamond Vogel; PermAcryl Exterior Acrylic Latex Satin

D. Ferrous Metal Substrates: High performance acrylic coating; two (2) finish coats over prime coat.
   1. Prime Coat: (Omit prime coat on factory-primed substrates.)
      a. PPG Paints; Pitt Tech Plus Primer, 4020.
      b. Sherwin-Williams; Pro Industrial Pro-Cryl Universal Primer, B66-310 Series.
      c. Diamond Vogel; Vers-Acryl 303 Acrylic DTM Primer/Finish Mid-Sheen
   2. Finish Coat:
      a. PPG Paints; Pitt-Tech Plus. Semi-Gloss, 4216HP.
      b. Sherwin-Williams; Sher-Cryl HPA, Semi-Gloss, B66-350 Series.
      c. Diamond Vogel; Finium DTM-AT Acrylic Semi-Gloss

E. Fiber Cement Siding and Trim: Acrylic coating; two (2) finish coats over prime coat.
   1. Prime Coat: (Omit prime coat on factory-primed substrates.)
      a. PPG Paints; Perma-Crete Alkali Resistant Primer, 4-603.
      b. Sherwin-Williams; Loxon Concrete and Masonry Primer, A24W8300.
      c. Benjamin Moore; Fresh Starte Moorwhite Penetrating Alkyd Primer K100
      d. Diamond Vogel; Weather Plate Exterior 100% Acrylic Latex Prime
   2. Finish Coats:
      a. PPG Paints; Manor Hall Timeless Satin, 73-410.
      b. Sherwin-Williams; Emerald Exterior Acrylic Satin, K48 Series.
      c. Benjamin Moore; Aura Exterior Paint, Satin
      d. Diamond Vogel; PermAcryl Exterior Acrylic Latex Satin

F. Galvanized Metal Substrates: High performance acrylic coating; two (2) finish coats over prime coat.
   1. Prime Coat:
      a. PPG Paints; Pitt Tech Plus Primer, 4020.
      b. Sherwin-Williams; Pro Industrial Pro-Cryl Universal Primer, B66-310 Series.
      c. Diamond Vogel; Vers-Acryl 303 Acrylic DTM Primer/Finish Mid-Sheen
   2. Finish Coat:
      a. PPG Paints; Pitt-Tech Plus. Semi-Gloss, 4216HP.
      b. Sherwin-Williams; Sher-Cryl HPA, Semi-Gloss, B66-350 Series.
      c. Diamond Vogel; Finium DTM-AT Acrylic Semi-Gloss

G. Wood and MDX: Oil-based primer, acrylic coating.
   1. Exposed Surfaces: Two (2) finish coats over two (2) prime coats.
   2. Concealed Surfaces: One (1) finish coat over two (2) prime coats.
   3. Prime Coats:
      a. PPG Paints; Speedhide Exterior Wood Primer, 17-941XI.
      b. Sherwin-Williams; Exterior Oil Based Wood Primer, Y24W820.
      c. Benjamin Moore; Multi-purpose oil based primer, Fresh Start, exterior
      d. Diamond Vogel; Prime-O-Seal Exterior Alkyd Primer/Sealer
   4. Finish Coats:
      a. PPG Paints; Manor Hall Timeless Satin, 73-410.
      b. Sherwin-Williams; Emerald Exterior Acrylic Satin, K48 Series.
      c. Benjamin Moore; Aura Exterior Paint Satin
      d. Diamond Vogel; PermAcryl Exterior Acrylic Latex Satin
   5. Extend two finish coats over preprimed aluminum flashings used in conjunction with painted wood components.

H. Wood; Varnish over Stain System MPI EXT 6.3E: remove existing finishes and prepare wood for new finishes.
   1. Wood Conditioner:
      a. Minwax Pre-Stain Wood Conditioner.
   2. Stain Coat: Stain, exterior, solvent-based, semitransparent, MPI #13.
      a. Minwax Gel Stain.
      b. Color: as selected by architect from manufacturer's full standard line.
   3. First Intermediate Coat: Varnish matching topcoat.
   4. Second Intermediate Coat: Varnish matching topcoat.
   5. Topcoat: Varnish, with UV inhibitor, exterior, semi-gloss (MPI Gloss Level 5), MPI #30.
      a. Minwax Helmsman Spar Varnish.

3.8 INTERIOR PAINTING SCHEDULE

A. Steel Substrates: Acrylic coating, two (2) finish coats over prime coat.
   1. Prime Coat:
      a. PPG Paints; Pitt Tech Plus Primer, 4020.
      b. Sherwin-Williams; Pro Industrial Pro-Cryl Universal Acrylic Primer, B66-310 Series.
      c. Diamond Vogel; Vers-Acryl 303 Acrylic DTM Primer/Finish Mid-Sheen
   2. Finish Coats:
      a. PPG Paints; Pitt-Tech Int/Ext DTM Satin Finish, 90-474.
      b. Sherwin-Williams; Pro Industrial DTM Acrylic Semi-Gloss, B66W1151 Series.
      c. Diamond Vogel; Finium DTM-AT Acrylic Semi-Gloss

B. Wood Substrates, Opaque Finish: Acrylic coating; two (2) finish coats over prime coat.
   1. Prime Coat:
      a. PPG Paints; Gripper Primer 3210.
      b. Sherwin-Williams; Premium Wall and Wood Primer, B28W8111.

c. Benjamin Moore; Multi-purpose latex primer, Fresh Start, interior
d. Diamond Vogel; Mill Max Interior Latex Enamel Undercoat

2. Finish Coats:
a. PPG Paints; Manor Hall Interior Latex Eggshell, 82-300.
b. Sherwin-Williams; Emerald Interior Latex Satin, K37 Series.
c. Benjamin Moore; Aura Interior Paint, Eggshell
d. Diamond Vogel; PermAcryl Interior Latex Satin Enamel

C. Wood Substrates, Transparent Finish: Stained, polyurethane coating; two (2) finish coats over stain coat and sanding sealer.
1. Stain Coat:
a. PPG Paints; Deft DFT400 Interior Oil Based Stain.
b. Sherwin-Williams; Wood Classics Oil Stain, A49 Series.
c. Diamond Vogel; Old Masters Penetrating Stain

2. Sanding Sealer:
a. PPG Paints; Deft DFT61 WB Sanding Sealer.
b. Sherwin-Williams; Wood Classics Sanding Sealer.
c. Diamond Vogel; Old Masters Oil-Based Sanding Sealer

3. Intermediate Coat:
a. PPG Paints; Deft DFT159 WB Polyurethane Satin.
b. Sherwin-Williams; Wood Classics Polyurethane Varnish, A67 Series - Gloss.
c. Diamond Vogel; Old Masters Oil-Based Sanding Sealer

4. Finish Coat:
a. PPG Paints; Deft DFT159 WB Polyurethane Satin.
b. Sherwin-Williams; Wood Classics Polyurethane Varnish, A67 Series - Satin.
c. Diamond Vogel; Old Masters Oil-Based Polyurethane

END OF SECTION 09 91 00

SECTION 10 73 13 - AWNINGS

PART 1 - GENERAL

1.1 SUMMARY

A. Section Includes:
   1. Fixed awnings.
   2. Retractable awnings, manually operated.
   3. Retractable awnings, motorized.
   4. Repairs to existing awnings.

B. Related Requirements:
   1. Section 05 50 00 "Metal Fabrications" for blocking, shims, reinforcing, and supplemental support members for connecting to awning frame and anchorage.
   2. Section 06 10 00 "Rough Carpentry" for blocking, nailers, shims, reinforcing, framing, and furring for connecting to awning frame and anchorage.

1.2 SUBMITTALS

A. Product Data: For each type of product.
   1. Include styles, material descriptions, construction details, fabrication details, dimensions of individual components and profiles, hardware, fittings, mounting accessories, features, and finishes for awnings.

B. Shop Drawings:
   1. Include plans, elevations, sections, mounting heights, and attachment details.
   2. Detail fabrication and assembly of awnings, including seam layout, spacing, and orientation of awning fabric.
   3. Show locations for blocking, reinforcement, and supplementary structural support.

C. Samples: For each exposed product and for each color and texture specified.

D. Samples for Verification: For the following:
   1. Awning Fabric: 12-inch- square section of fabric from dye lot to be used for the Work, with specified treatments applied. Mark face of fabric.
   2. Seam, Edge, and Corner Condition: Not less than 12-inch- long section showing seam, edge, and corner treatment.
   3. Valance: Full-size unit, not less than 12 inches long.
   4. Frame Finish: Not less than 6-inch lengths.
   5. Frame Corner and Frame Intersections: Not less than 12-inch sections showing finished joint construction and fabric and valance attachment to awning frame.
   6. Exposed Hardware Finishes: Manufacturer's standard-size unit, not less than 3 inches square.
   7. Accessories: Manufacturer's full-size unit.

E. Product Schedule: For awnings. Use same designations indicated on Drawings.

F. Delegated-Design Submittal: For awnings.

G. Qualification Data: For Installer, fabricator and professional engineer.

H. Welding certificates.

I. Product Certificates: For each type of awning fabric.

J. Evaluation Reports: For anchors and fasteners, from ICC-ES.

K. Sample Warranty: For special warranty.

1.3 CLOSEOUT SUBMITTALS

A. Operation and Maintenance Data: For awnings to include in operation and maintenance manuals.
   1. In addition to items specified in Section 01 78 23 "Operation and Maintenance Data," include the following:
      a. Methods for maintaining awning fabrics and finishes.
      b. Precautions about cleaning materials and methods that could be detrimental to fabrics, finishes, and performance.
      c. Operating hardware.

1.4 QUALITY ASSURANCE

A. Fabricator Qualifications: Shop that employs skilled workers who custom-fabricate products similar to those required for this Project and whose products have a record of successful in-service performance.
   1. Fabricator is a Master Fabric Craftsman certified by the Industrial Fabrics Association International.
   2. Fabricator's responsibilities include fabricating and installing awnings and providing professional engineering services needed to assume engineering responsibility.

B. Installer Qualifications: Fabricator of products.

C. Welding Qualifications: Qualify procedures and personnel according to the following:
   1. AWS D1.1/D1.1M, "Structural Welding Code - Steel."
   2. AWS D1.2/D1.2M, "Structural Welding Code - Aluminum."

D. Mockups: Build mockups to verify selections made under Sample submittals and to demonstrate aesthetic effects, to set quality standards for materials and execution, and to set quality standards for fabrication and installation.
   1. Build mockup of typical awning as shown on Drawings.
   2. Subject to compliance with requirements, approved mockups may become part of the completed Work if undisturbed at time of Substantial Completion.

1.5 FIELD CONDITIONS

A. Weather Limitations: Proceed with installation only when existing and forecasted weather conditions permit installation of awnings in exterior locations to be performed according to manufacturers' written instructions and warranty requirements.

B. Field Measurements: Where awning installation is indicated to fit to other work, verify dimensions of other work by field measurements before fabrication and indicate measurements on Shop Drawings. Allow clearances for fenestration operation throughout the entire operating range. Notify Architect of discrepancies. Coordinate fabrication schedule with construction progress to avoid delaying the Work.

1.6 WARRANTY

A. Special Warranty: Manufacturer and fabricator agree to repair or replace components of awnings that fail in materials or workmanship within specified warranty period.
   1. Failures include, but are not limited to, the following:
      a. Structural failures including framework.
      b. Faulty operation of operator.
      c. Deterioration of fabric including seam failure.
      d. Deterioration of metals, metal finishes, and other materials beyond normal weathering.
   2. Fixed Awning Frame Warranty Period: 10 years from date of Substantial Completion.
   3. Retractable Awning Frame Warranty Period: 20 years from date of Substantial Completion.
   4. Fabric Warranty Period: 10 years from date of Substantial Completion.
   5. Thread Warranty Period: Lifetime of fabric or 10 years from date of Substantial Completion.

PART 2 - PRODUCTS

2.1 MANUFACTURERS

A. Fixed Awnings. Subject to compliance with requirements, provide products by one of the following, or an approved equal:
   1. Moeckly Fabrications Company, 107 Campus Drive, Huxley, Iowa 50124; (515) 360-9688.
   2. Dave Long Protective Products, 4852 Sand Road SE, Iowa City, IA 52240; (888) 484-3164.
   3. Red Oak Glass & Awning, 109 Oak Street, Red Oak, IA 51566; (800) 326-8199.

B. Operable Awnings (drop arm, manual hand crank operation, non-motorized). Provide one detachable crank handle. Basis of Design: Robusta Heavy Duty Window Awning, by Nulmage Awnings, Futureguard Building Products, Inc. Subject to compliance with requirements, provide the named product or a comparable product by one of the following:
   1. Eclipse Shading Systems
   2. Kohler Awning, Inc.
   3. Nu Image Awnings, Futureguard Building Products, Inc.

C. Operable Awnings (self supporting, hinged, projecting arm, manual hand crank operation, non-motorized). Provide one detachable crank handle. Basis of Design: G150 Series Retracable Awning, by Nulmage Awnings, Futureguard Building Products, Inc. Subject to compliance with requirements, provide the named product or a comparable product by one of the following:
   1. Eclipse Shading Systems
   2. Nu Image Awnings, Futureguard Building Products, Inc.
   3. Solair Shade Solutions.
   4. Sunesta.
   5. Toff Industries.

D. Operable Awnings (self supporting, hinged, projecting arm, motorized). Basis of Design: G150 Series Retracable Awning, by Nulmage Awnings, Futureguard Building Products, Inc. Subject to compliance with requirements, provide the named product or a comparable product by one of the following:
   1. Eclipse Shading Systems
   2. Nu Image Awnings, Futureguard Building Products, Inc.
   3. Solair Shade Solutions.
   4. Sunesta.

5. Toff Industries.

E. Source Limitations: Obtain fixed awnings from single source from a single manufacturer. Obtain operable awnings from single source from a single manufacturer.

2.2 PERFORMANCE REQUIREMENTS

A. Delegated Design: Engage a qualified professional engineer, as defined in Section 01 40 00 "Quality Requirements," to design of awnings.

B. Thermal Movements: Allow for thermal movements from ambient and surface temperature changes.
   1. Temperature Change: 120 deg F, ambient; 180 deg F, material surfaces.

C. Regulatory Requirements: Provide awnings complying with limitations of authorities having jurisdiction.

2.3 AWNING FABRICS

A. Basis-of-Design Product: Sunbrella; TriVantage Mayfield Collection.

B. Fabric Fiber Content: 100-percent solution-dyed acrylic; fluorocarbon finish.
   1. Fabric Weight: 9.25 oz per sq yard.
   2. Width: 46/47-inches.
   3. Bottom Hem: As indicated in an Awning Schedule.
   4. Trim: As indicated in an Awning Schedule.
   5. Fringe: As indicated in an Awning Schedule.
   6. Color: As selected by Architect from full range of samples from Sunbrella TriVantage Mayfield Collection.
   7. Applied Treatment: Water repellent.
   8. Performance Characteristics: As follows:
      a. Mildew Resistance: Showing no growth when tested according to ASTM G 21.

C. Thread: 100 percent expanded PTFE, UV-light, mildew, and rot resistant, to last the lifetime of the fabric.
   1. Basis of Design: Gore Tennara.

2.4 AWNING FRAMES

A. Steel Frames:
   1. Steel Plates, Shapes, and Bars: ASTM A 36/A 36M.
   2. Cold-Formed Steel Tubing: ASTM A 500/A 500M, grade as required by structural loads.
   3. Steel Pipe: ASTM A 53/A 53M, standard weight (Schedule 40) unless another weight is indicated or required by structural loads.
   4. Steel Mechanical Tubing: Cold-rolled, electric-resistance-welded carbon or alloy steel tubing complying with ASTM A 513 or steel tubing fabricated from steel complying with ASTM A 1011/A 1011M and complying with dimensional tolerances in ASTM A 500/A 500M.
   5. Steel Finish: Hot-dipped galvanized following fabrication, with powder-coat finish. Comply with finish manufacturer's written instructions for surface preparation including pretreatment, application, baking, and minimum dry film thickness.
   6. Steel Finish: Cold-formed, zinc galvanizing system – Approved product substitution: Allied Mechanical Gatorshield.

B. Aluminum Frames: Alloy and temper recommended by awning manufacturer for type of use and finish indicated and with not less than the strength and durability properties of alloy and temper required by structural loads.
   1. Aluminum Plate and Sheet: ASTM B 209.
   2. Aluminum Extrusions: ASTM B 221.
   3. Extruded Structural Pipe and Round Tubing: ASTM B 429/B 429M, standard weight (Schedule 40) unless another weight is indicated or required by structural loads.
   4. Drawn Seamless Tubing: ASTM B 210.
   5. Aluminum Finish: Mill finish complying with finish manufacturer's written instructions for surface preparation including pretreatment, application, baking, and minimum dry film thickness.

C. Anchors, Fasteners, Fittings, Hardware, and Installation Accessories: Complying with performance requirements indicated and suitable for exposure conditions, supporting structure, anchoring substrates, and installation methods indicated. Corrosion-resistant or noncorrodible units; weather-resistant, tamperproof, vandal- and theft-resistant, compatible, nonstaining materials. Provide as required for awning assembly, mounting, and secure attachment. Number as needed to comply with performance requirements and to maintain uniform appearance; evenly spaced. Where exposed to view, provide finish and color as selected by Architect from manufacturer's full range.
   1. Wood Screws: ASME B18.6.1.
   2. Lag Bolts: ASME B18.2.1..
   3. Bolts: Steel bolts complying with ASTM A 307, Grade A; with ASTM A 563 hex nuts and, where indicated, flat washers.
   4. Expansion Anchors: Anchor bolt and sleeve assembly of material indicated below with capability to sustain, without failure, a load equal to six times the load imposed when installed in unit masonry assemblies and equal to four times the load imposed when installed in concrete as determined by testing according to ASTM E 488 conducted by a qualified independent testing and inspecting agency.
      a. Material: Stainless steel with bolts and nuts complying with ASTM F 593 and ASTM F 594, Alloy Group 1 or 2.
   5. Adhesive-Bonded Anchors: Anchor bolt and sleeve assembly of material indicated below with capability to sustain, without failure, a load equal to six times the load imposed when installed in unit masonry assemblies and equal to four times the load imposed when installed in concrete as determined by testing according to ASTM E 1512 conducted by a qualified independent testing and inspecting agency.
      a. Material: Stainless steel with bolts and nuts complying with ASTM F 593 and ASTM F 594, Alloy Group 1 or 2.
   6. Grommets: Zinc-coated brass, No. 1 or 2.
      a. Grommet Spacing: 6 inches o.c.
   7. Lacing: 100 percent polyester, braided No. 4; or 8” black plastic cable locking ties.

D. Galvanizing Repair Paint: High-zinc-dust-content paint for regalvanizing welds in steel, complying with SSPC-Paint 20.

E. Bituminous Paint: Cold-applied asphalt emulsion complying with ASTM D 1187.

2.5 AWNING FABRICATION

A. Fabrics: Reinforce wear points and hardware attachment points with nonwoven webbing. Seam fabrics as follows:
   1. Fabric Edges and Seams: Fold and stitch selvedge and cut fabric edges. Cut and sew, do not staple fabric to frame.

B. Decorative Trims: As indicated in Awning Schedule.

1. Colors:
    a. Basis of Design: Sunbrella; TriVantage Mayfield Collection. Actual fabric to be selected by Architect from Sunbrella TriVantage Mayfield Collection.

C. Frames: Preassemble awning frames in the shop to greatest extent possible. Disassemble units only as necessary for shipping and handling limitations. Use connections that maintain structural value of joined pieces. Clearly mark units for reassembly and coordinated installation.
1. Form bent-metal corners to smallest radius possible without causing grain separation or otherwise impairing work.
2. Form exposed work true to line and level with accurate angles and surfaces and straight edges.
3. Form exposed connections with hairline joints, flush and smooth, using concealed fasteners where possible. Fabricate slip-fit connections that will be exposed to weather in a manner to exclude water. Provide weep holes where water may accumulate.
4. Weld corners and connections continuously. Obtain fusion without undercut or overlap. Remove welding flux immediately. At exposed corners and connections, finish exposed welds and surfaces smooth and blended so no roughness shows after finishing and contour of welded surface matches that of adjacent surface.
5. Provide for anchorage of type indicated; coordinate with supporting structure. Space anchoring devices to secure metal fabrications in place and to properly transfer loads.

D. Colors of Metal and Plastic Components Exposed to View: As selected by Architect from manufacturer's full range.

2.6 RETRACTABLE-AWNING OPERATORS

A. Manual Operation: With gear and crank operator.
1. Manual Operation Assist Mechanism: Manufacturer's standard spring assist for operating heavy awnings.
2. Crank Handle: One per building address, detachable.
3. Awning Coupler System: Not required.
4. Operating Function: Stop and hold awning at any position, at any angle, in ascending or descending travel

B. Motorized Operator: Provide factory-assembled, motorized, retractable-awning operator designed for retracting awnings of type, size, weight, construction, use, and operation frequency indicated.

C. Electrical Components, Devices, and Accessories: Listed and labeled as defined in NFPA 70, by a qualified testing agency, and marked for intended location and application.

D. Control Equipment: Comply with NEMA ICS 1, NEMA ICS 2, and NEMA ICS 6.

E. Electric Motors: UL-approved or -recognized, totally enclosed, insulated motor, complying with NEMA MG 1, with thermal-overload protection and internal limit switches; sized by awning manufacturer to start and operate size and weight of awning considering service factor or considering Project's service conditions without exceeding nameplate ratings.
1. Service Factor: According to NEMA MG 1 unless otherwise indicated.
2. Motor Characteristics: Single phase, 110 V, 60 Hz.
3. Coordinate wiring requirements and electrical characteristics of motors with building electrical system.
4. Motor Mounting: Within manufacturer's standard roller enclosure.

F. Remote Controls: Electric controls with NEMA ICS 6, Type 4 enclosure for surface mounting. Provide the following devices for remote-control activation of awnings:

1. Keyed Control Stations: Momentary-contact, three-position, switch-operated control station with open, close, and off functions. Provide two keys per station.

G. Awning Hood: Sheet metal enclosure sized to fit awning roller and operating hardware inside and designed for UV-light, dust, weather, and vandal protection. Finish and color to match awning framing unless otherwise indicated.

PART 3 - EXECUTION

3.1 EXAMINATION

A. Examine substrates, areas, and conditions, with Installer present, for compliance with requirements for supporting members, blocking, inserts, installation tolerances, operational clearances, and other conditions affecting performance of the Work.

B. Proceed with installation only after unsatisfactory conditions have been corrected.

3.2 INSTALLATION

A. General: Install awnings at locations and in position indicated, securely connected to supports, free of rack, and in proper relation to adjacent construction. Use mounting methods of types described and in compliance with Shop Drawings and fabricator's written instructions.

B. Install awnings after other finishing operations, including joint sealing and painting, have been completed.

C. Attach fabric to frames as recommended by fabricator, using lacing method as required to conceal ends of lacing to ensure tight, wrinkle-free fit of fabric to frame.

D. Join frame connections accurately together to form hairline joints, and tighten to secure.

E. Anchoring to In-Place Construction: Use anchors, fasteners, fittings, hardware, and installation accessories where necessary for securing awnings to structural support and for properly transferring load to in-place construction.

F. Corrosion Protection: Coat concealed surfaces of aluminum that come in contact with grout, concrete, masonry, wood, or dissimilar metals with a heavy coat of bituminous paint.

G. Coordinate awning installation with flashing and joint-sealant installation so these materials are installed in sequence and in a manner that prevents exterior moisture from passing through completed exterior wall and roof assemblies.

3.3 REPAIRS (EXISTING AWNING FRAME)

A. Document existing operable awning conditions. Demonstrate intended operations and awning projection dimensions.

B. Remove existing fabric and dispose of fabric.

C. Remove and salvage existing awning, frame, and hardware from building. Dismantle as necessary for cleaning and repair work.

D. Clean and scrape existing frame and hardware in the shop. Prep and spot prime areas showing rust on the frame and hardware. Paint frame and hardware.

E. Make repairs to existing parts as necessary. Replace parts that are missing, damaged, or deteriorated beyond repair. Adjust existing and replacement components as necessary for complete and smooth operation.

F. Furnish and install new fabric.

G. Lubricate moving parts, including pivot points and gears.

H. Demonstrate operations to Owner and adjust as necessary for smooth and complete operation.

3.4 ADJUSTING

A. Adjust hardware and moving parts to function smoothly and lubricate as recommended by retractable-awning manufacturer.

3.5 CLEANING AND PROTECTION

A. Touchup Painting: Immediately after erection, clean field welds, connections, and abraded areas. Paint uncoated and abraded areas with same or compatible material as used for shop-applied finish painting.
   1. Apply by brush or spray to provide a minimum 2.0-mil dry film thickness.

B. Galvanized Surfaces: Clean field welds, connections, and abraded areas and repair galvanizing to comply with ASTM A 780.

3.6 DEMONSTRATION

A. Engage a factory-authorized service representative to train Owner's maintenance personnel to adjust, operate, and maintain retractable awnings.

END OF SECTION 10 73 13

MARSHALLTOWN FACADE REHABILITATION
MARSHALLTOWN, IOWA

CONSTRUCTION DOCUMENTS

RDG PROJECT NUMBER: **3005.009.00**
ISSUE DATE: **FEBRUARY 20, 2023**
DRAWING INDEX:

©2023 RDG Planning & Design, Inc.

SHEET LIST	
Sheet Number	Sheet Name
A00.01	MATERIALS AND LEGEND
A00.02	ARCHITECTURAL NOTES
A00.03	ARCHITECTURAL NOTES
A05.01a	BUILDING 1 (13-15 SOUTH CENTER) DEMOLITION
A05.01b	BUILDING 1 (13-15 SOUTH CENTER) IMPROVEMENTS
A05.01c	BUILDING 1 (13-15 SOUTH CENTER) DEMOLITION
A05.01d	BUILDING 1 (13-15 SOUTH CENTER) IMPROVEMENTS
A05.02a	BUILDING 2 (14-16-18 NORTH CENTER) FLOOR PLANS
A05.02b	BUILDING 2 (14-16-18 NORTH CENTER)
A05.03a	BUILDING 3 (1 WEST MAIN) DEMOLITION
A05.03b	BUILDING 3 (1 WEST MAIN) IMPROVEMENTS
A05.03c	BUILDING 3 (1 WEST MAIN) IMPROVEMENTS
A05.04	NOT USED.
A05.05	BUILDING 5 (21 WEST MAIN)

SHEET LIST	
Sheet Number	Sheet Name
A05.06	BUILDING 6 (23 WEST MAIN)
A05.07	BUILDING 7 (25 WEST MAIN)
A05.08	BUILDING 8 (14 WEST MAIN)
A9.01	EXTERIOR DETAILS
A9.02	EXTERIOR DETAILS
A10.01	DOOR AND WINDOW SCHEDULES
A10.02	AWNING SCHEDULE AND DETAILS
A10.03	DETAILS
S1	STRUCTURAL REPAIRS
S2	STRUCTURAL NOTES
S3	STRUCTURAL PLAN
S4	STRUCTURAL DETAILS

SHEET SIZE: 11"x17"
2/26/2023 3:31:18 PM

RDG Planning & Design, Inc. 301 Grand Avenue Des Moines, Iowa 50309-1718 Phone 515.288.3141 www.rdgusa.com
An Architecture, Landscape Architecture, Engineering, Interior Design, and Planning Corporation
Denver ● Des Moines ● Iowa City ● Omaha ● St. Louis

SHEET SIZE: 11"x17"

GENERAL SYMBOLS LEGEND

A1 / A09.01	DETAIL NUMBER SHEET NUMBER
A1 / A06.01 A1 / A06.01	BUILDING SECTION NUMBER SHEET NUMBER
A1 / A07.01	SECTION NUMBER SHEET NUMBER
A1 / A05.01	ELEVATION NUMBER SHEET NUMBER
101	AWNING NUMBER
1101	DOOR MARK
ASI1	REVISION MARK
3	WINDOW MARK

MATERIAL LEGEND

ALUMINUM PANEL	PAINT
BATT INSULATION	PLASTER
BRICK	PLYWOOD
CLEAN MASONRY	REPOINT MASONRY
FINISH WOOD	RESET MASONRY
GYPSUM BOARD	SPANDREL GLASS OR DECORATIVE FILM OVERLAY
NEW MATERIAL	STUCCO REMOVAL

ABBREVIATIONS

ALUM	ALUMINUM
BOD	BASIS OF DESIGN
DIA	DIAMETER
DTL	DETAIL
EXST	EXISTING
EXT	EXTERIOR
FT	FOOT
GA	GAUGE
GYP BD	GYPSUM BOARD
HM	HOLLOW METAL
HT	HEIGHT
IMP	INSULATED METAL PANEL
INT	INTERIOR
MAX	MAXIMUM
MIN	MINIMUM
PT	PAINT
SIM	SIMILAR
TBD	TO BE DETERMINED
TYP	TYPICAL
WD	WOOD

CONSTRUCTION DOCUMENTS

MARSHALLTOWN FACADE REHABILITATION

RDG PLANNING • DESIGN

ARCHITECT
RDG Planning & Design
301 Grand Avenue
Des Moines, Iowa 50309-1718
Phone: 515.288.3141
www.rdgusa.com

MARSHALLTOWN
MORE THAN EVER

REV	DATE	DESCRIPTION

ISSUED: FEBRUARY 20, 2023

RDG PROJ. NO: 3005.009.00

©2023 RDG Planning & Design

THESE DOCUMENTS HAVE BEEN PREPARED BY RDG PLANNING & DESIGN, INC. SPECIFICALLY FOR THE:

MARSHALLTOWN FACADE REHABILITATION

PROJECT. THEY ARE NOT SUITABLE FOR USE ON OTHER PROJECTS OR IN OTHER LOCATIONS WITHOUT THE EXPRESS WRITTEN APPROVAL AND PARTICIPATION OF RDG PLANNING & DESIGN, INC. REPRODUCTION IS PROHIBITED. THIS DRAWING MAY NOT REPRESENT ALL CHANGES THAT HAVE OCCURRED DURING BID OR CONSTRUCTION PHASES. CONSTRUCTION DOCUMENTS, ADDENDA, AND CHANGE DOCUMENTS REMAIN THE OFFICIAL CONSTRUCTION DOCUMENTS.

MATERIALS AND LEGEND

A00.01

SHEET SIZE: 11"x17"

ARCHITECTURAL GENERAL NOTES

1 GENERAL

1.1 WHEN DRAWINGS AND SPECIFICATIONS ARE NOT IN AGREEMENT, THE BIDDER SHALL REQUEST WRITTEN CLARIFICATION PRIOR TO BIDDING AND CONSTRUCTION. IF NOT CLARIFIED PRIOR TO BIDDING, THE FOLLOWING PRECEDENCE SHALL BE USED TO DETERMINE SCOPE OF THE BID: SIZE/QUANTITY CONTROLLED BY DRAWINGS, MATERIAL QUALITY CONTROLLED BY SPECIFICATION. FINAL INTERPRETATION MUST BE ISSUED BY THE ARCHITECT/ENGINEER PRIOR TO MATERIAL FABRICATION OR CONSTRUCTION.

1.2 CONTRACTOR SHALL VERIFY CONDITIONS AND DIMENSIONS PRIOR TO MATERIAL FABRICATION AND CONSTRUCTION.

1.3 SYMBOLS AND PATTERNS USED ON THE ARCHITECTURAL DRAWINGS ARE SHOWN ON A00.01.

1.4 DIMENSIONS ARE NOMINAL, ROUNDED TO THE NEAREST INCH, FINISH FACE TO FINISH FACE, UNLESS NOTED OTHERWISE.

1.5 INTERIOR WOOD AND GYPSUM BOARD STOREFRONT SURFACES ARE NOT TO BE PRIMED OR PAINTED BY THE CONTRACTOR UNLESS NOTED OTHERWISE. FUTURE PAINTING BY THE "BUILDING OWNER". WOOD AND HOLLOW METAL DOORS AND FRAMES ARE TO BE PRIMED AND PAINTED ON BOTH SIDES BY THE CONTRACTOR UNLESS NOTED

1.6 ALL PAINT COLORS REFERENCED ARE "SHERWIN-WILLIAMS (SW), UNLESS NOTED OTHERWISE.

1.7 THE TERM "GLASS" AND "GLAZING" ARE SYNONYMOUS, UNLESS NOTED OTHERWISE

1.8 PAINT AND REPOINT SCOPE TO INCLUDE ANY RETURNS TO FACE OF BUILDING (I.E. DEEP WINDOW JAMBS OR PILASTERS).

1.9 PREP AND PAINT SURFACE BY REMOVING PEELING PAINT DOWN TO SOUND WOOD OR PAINT, UNLESS NOTED OTHERWISE. SOUND PAINT MAY REMAIN.

1.10 ALL CHRISTMAS LIGHTS TO REMAIN, IF ANY; COORDINATION REQUIRED WHEN ADDING PARAPET CAP.

1.11 SQUARE FOOTAGES ARE APPROXIMATE AND INTENDED ONLY FOR CONVENIENCE.

1.12 METAL CORNICE, WINDOW HOODS AND SILLS REPAIR SCOPE: INCLUDES THE REPAIR OF EXISTING HISTORIC METAL CORNICE. REMOVE EXISTING PAINTS AND COATINGS. REMOVE BIRD NESTS. REMOVE AND REINSTALL EXISTING ELECTRICAL COMPONENTS INCLUDING EXTERIOR CHRISTMAS LIGHTS, IF ANY. REATTACH LOOSE COMPONENTS. INCLUDE UP TO 10% REMOVAL AND REATTACHMENT OF LOOSE COMPONENTS WITH REPLACEMENT OF DETERIORATED WOOD SUPPORTING CORNICE. SEAL JOINTS AT TOP OF CORNICE AND OTHER STRATEGIC LOCATIONS TO PREVENT WATER INFILTRATION BUT ALLOW DRAINAGE AT BOTTOM OF CORNICE. PREP AND PAINT METAL CORNICE. ARCHITECT WILL FURNISH DETAILED PAINT SCHEME FOR EACH BUILDING CORNICE, UNFORESEEN CONDITIONS OF CORNICE COMPONENTS MAY RESULT IN ADDITIONAL COST. ANY UNFORSEEN CONDITIONS OF DAMAGE OR MISSING PIECES SHALL BE RESOLVED BY CHANGE ORDER.

1.13 CAP ELECTRICAL SCOPE: INCLUDES ABANDONMENT OF EXISTING ELECTRICAL WIRING AT EXISTING OR FORMER ELECTRICAL CONTROLS, POWER, OR EQUIPMENT LOCATION. TERMINATE WIRING IN EXISTING (OR PROVIDE NEW) JUNCTION BOX WITH BLANK SUITABLE FOR THAT LOCATION. PROVIDE WIRE CONNECTORS AT END OF WIRING.

2 WINDOWS

2.1 CONTRACTOR SHALL VERIFY EXISTING CONDITIONS AND WINDOW, GLASS, DOOR, FRAME AND STOREFRONT DIMENSIONS PRIOR TO SUBMITTALS AND RE-VERIFY PRIOR TO ORDERING MATERIALS.

2.2 SCOPE OF EXISTING WOOD WINDOWS AND FRAME REPAIRS: SEE PROJECT MANUAL SECTION 08 01 52.61 AND WINDOW SCHEDULE. SEE DRAWINGS FOR ADDITIONAL INFORMATION AND SCOPE.

2.3 LOCATIONS SHOWN TO RECEIVE NEW WINDOWS SHALL ALSO RECEIVE NEW WINDOW FRAMES AND TRIM, UNLESS NOTED OTHERWISE.

2.4 PAINTING NOTES APPLY TO BOTH WINDOWS AND STORM WINDOWS.

3 DOORS

3.1 CONTRACTOR SHALL VERIFY EXISTING CONDITIONS AND WINDOW, GLASS, DOOR, FRAME AND STOREFRONT DIMENSIONS PRIOR TO SUBMITTALS AND RE-VERIFY PRIOR TO ORDERING MATERIALS.

3.2 DOOR HANDING TO MATCH EXISTING UNLESS NOTED OTHERWISE.

3.3 LOCATIONS SHOWN TO RECEIVE NEW DOORS SHALL ALSO RECEIVE NEW DOOR FRAMES AND TRIM, UNLESS NOTED OTHERWISE.

ARCHITECTURAL GENERAL NOTES

4 INTERIOR

4.1 NEW WALL, DOOR, AND WINDOW SYSTEMS ARE TO BE SEALED AND TRIMMED WITH WOOD TRIM ON THE INTERIOR. TRIM TO MATCH EXISTING UNLESS NOTED OTHERWISE.

4.2 THE OWNER OF EACH BUILDING IS RESPONSIBLE FOR ALL INTERIOR FINISHES AND HOW THEY TERMINATE AT THE NEW STOREFRONT WALL TYPICALLY, UNLESS NOTED OTHERWISE.

5 STOREFRONT

5.1 SUPPORT THE EXISTING STEEL LINTELS AND MASONRY ABOVE WHEN REMOVING STOREFRONT INFILL. RETAIN ANY ORIGINAL STEEL COLUMNS OR SUPPORT THAT MAY BE HIDDEN IN THE EXISTING CONSTRUCTION. NOTIFY ARCHITECT AND PROVIDE PHOTOGRAPHS AT THE END OF DEMOLITION.

5.2 STOREFRONTS SHOWN TO BE REMOVED AND REPLACED WITH NEW STOREFRONT CONSTRUCTION MAY CONTAIN EXISTING ELECTRICAL AND/OR MECHANICAL LINES. ANY APPARENT AND OBVIOUS EXISTING LINES SHALL BE RE-INCORPORATED INTO THE NEW CONSTRUCTION AT THE GENERAL EXISTING LOCATIONS, UNLESS NOTED OTHERWISE. DEAD OR ABANDONED LINES MAY BE CAPPED AT THE WALL, WITH THE OWNER'S PERMISSION. UNKNOWN AND CONCEALED LINES WILL BE ADDRESSED WITH A CHANGE ORDER.

5.3 STOREFRONT REPAIR: SCOPE INCLUDES THE REPAIR OF EXISTING HISTORIC WOOD STOREFRONT, WINDOW FRAMES, SASHES, PANELS, AND TRIM. SCOPE INCLUDES THE REPAIR OF EXISTING IRON AND STEEL COLUMNS AND EXPOSED STEEL LINTELS AND BEAMS. REMOVE EXISTING PAINTS AND COATINGS. REMOVE AND REINSTALL OR PROTECT EXISTING AUXILLARY COMPONENTS INCLUDING ELECTRICAL OUTLETS, CONDUIT AND ELECTRICAL BOXES, PIPING, MAILBOXES AND OTHER COMPONENTS. REMOVE ABANDONED AND UNUSED COMPONENTS INCLUDING ANCHORS AS DIRECTED BY ARCHITECT, AND FILL RESULTING HOLES. FILL ALL HOLES AND CRACKS IN WOOD COMPONENTS. TREAT DRY WEATHERED WOOD IN PREPARATION FOR PAINTING WITH PRESERVATION TREATMENT. FILL SIGNIFICANT CRACKS AND CHECKS WITH WOOD CONSOLIDANT AND WOOD PATCHING COMPOUND. INCLUDE UP TO 10% REPLACEMENT OF HEAVILY DAMAGED WOOD TRIM, WITH PROFILES TO MATCH EXISTING. REATTACH LOOSE TRIM. FILL ALL HOLES AND CRACKS IN IRON WITH EPOXY STRUCTURAL ADHESIVE, REMOVE SURFACE RUST. PREP AND PAINT WOOD AND IRON STOREFRONT. ARCHITECT WILL FURNISH DETAILED PAINT SCHEME FOR EACH BUILDING AS NECESSARY.

5.4 BRONZE STOREFRONT REPAIR: SCOPE INCLUDES REPAIR OF EXISTING HISTORIC (MID 20TH CENTURY) STOREFRONT, WINDOW FRAMES, STOREFRONT GLAZING SUPPORTS AND GLAZING. REMOVE AND REINSTALL GLAZING STOPS AT PERIMETER OF GLASS (CAREFULLY LABEL COMPONENTS DURING REMOVAL.) REPLACE GLAZING AS INDICATED. REINSTALL STOPS TO ACCOMODATE NEW GLAZING THICKNESS AS NECESSARY. PROVIDE NEW FASTENERS COMPATIBLE WITH STOREFRONT MATERIALS. SEAL JOINTS AT STRATEGIC LOCATIONS TO PREVENT WATER INFILTRATION BUT ALLOW DRAINAGE.

6 AWNING

6.1 VERIFY FINAL LOCATIONS OF AWNINGS WITH ARCHITECT PRIOR TO FABRICATION AND INSTALLATION. LOCATIONS TO BE NOTED IN SHOP DRAWING SUBMITTALS.

6.2 AWNING SIZES ARE APPROXIMATE ONLY. CONTRACTOR TO VERIFY ON SITE PRIOR TO ORDERING.

6.3 EXISTING AWNINGS SHOWN TO REMAIN SHALL BE REMOVED AND REINSTALLED IN ORDER TO PAINT FACADE.

6.4 ALL AWNING COMPONENTS SHALL BE INSTALLED AT LEAST 6'-8" ABOVE THE SIDEWALK OR FLOOR

7 SIGNAGE

7.1 VERIFY FINAL LOCATIONS OF SIGNAGE WITH ARCHITECT PRIOR TO INSTALLATION.

7.2 ARCHITECT WILL PROVIDE DIGITAL FILES OF LOGOS AND TEXT AS REQUIRED FOR SIGNAGE TO CONTRACTOR FOR THEIR USE.

7.3 SIGNAGE IS FOR ILLUSTRATION ONLY; ACTUAL GRAPHICS MAY VARY.

CONSTRUCTION DOCUMENTS

MARSHALLTOWN FACADE REHABILITATION

RDG PLANNING • DESIGN

ARCHITECT
RDG Planning & Design
301 Grand Avenue
Des Moines, Iowa 50309-1718
Phone: 515.288.3141
www.rdgusa.com

MARSHALLTOWN
MORE THAN EVER

REV	DATE	DESCRIPTION

ISSUED: **FEBRUARY 20, 2023**

RDG PROJ. NO: **3005.009.00**

©2023 **RDG Planning & Design**

THESE DOCUMENTS HAVE BEEN PREPARED BY RDG PLANNING & DESIGN, INC. SPECIFICALLY FOR THE:

MARSHALLTOWN FACADE REHABILITATION

PROJECT. THEY ARE NOT SUITABLE FOR USE ON OTHER PROJECTS OR IN OTHER LOCATIONS WITHOUT THE EXPRESS WRITTEN APPROVAL AND PARTICIPATION OF RDG PLANNING & DESIGN, INC. REPRODUCTION IS PROHIBITED. THIS DRAWING MAY NOT REPRESENT ALL CHANGES THAT HAVE OCCURRED DURING BID OR CONSTRUCTION PHASES. CONSTRUCTION DOCUMENTS, ADDENDA, AND CHANGE DOCUMENTS REMAIN THE OFFICIAL CONSTRUCTION DOCUMENTS.

ARCHITECTURAL NOTES

A00.02

PDF CREATED ON: 2/26/2023 3:21:22 PM

SHEET SIZE: 11"x17"

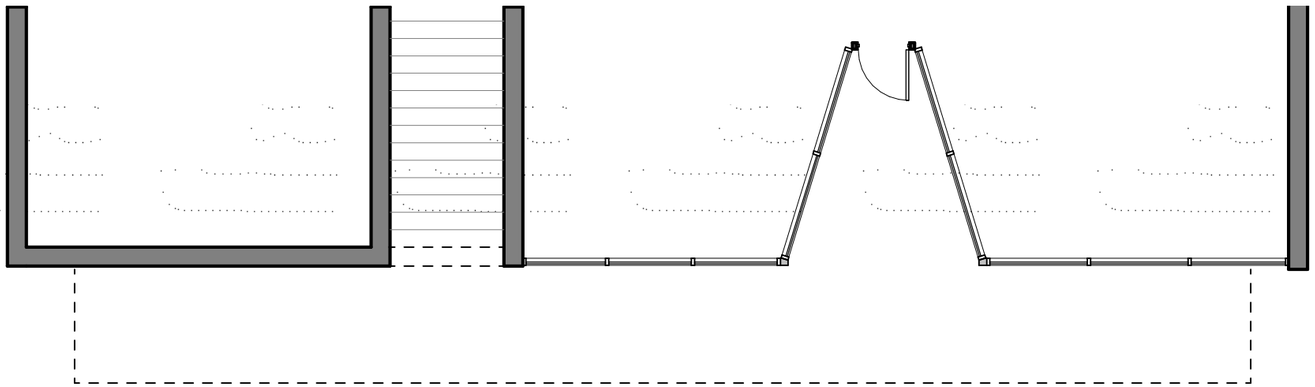

C1 **BUILDING 1: 13-15 SOUTH CENTER STREET - DEMOLITION - PLAN**

1/8" = 1'-0"

BUILDING 1 DOOR (N.T.S.)

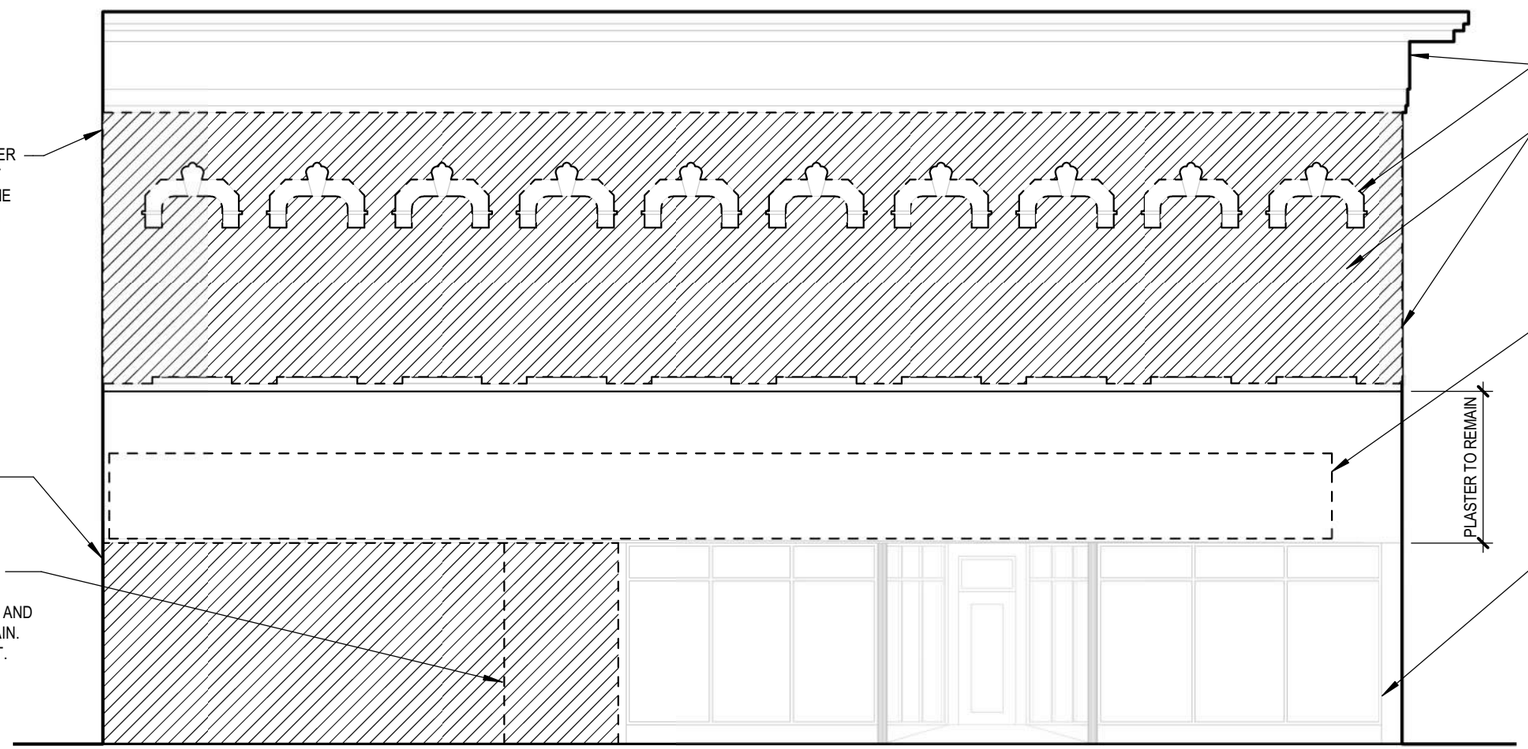

A1 **BUILDING 1: 13-15 SOUTH CENTER STREET - DEMOLITION**

1/8" = 1'-0"

PDF CREATED ON: 2/26/2023 3:21:25 PM

CONSTRUCTION DOCUMENTS

MARSHALLTOWN FACADE REHABILITATION

RDG PLANNING • DESIGN

ARCHITECT
RDG Planning & Design
301 Grand Avenue
Des Moines, Iowa 50309-1718
Phone: 515.288.3141
www.rdgusa.com

MARSHALLTOWN MORE THAN EVER

REV	DATE	DESCRIPTION

ISSUED: **FEBRUARY 20, 2023**

RDG PROJ. NO: **3005.009.00**

©2023 **RDG Planning & Design**

THESE DOCUMENTS HAVE BEEN PREPARED BY RDG PLANNING & DESIGN, INC. SPECIFICALLY FOR THE:

MARSHALLTOWN FACADE REHABILITATION

PROJECT. THEY ARE NOT SUITABLE FOR USE ON OTHER PROJECTS OR IN OTHER LOCATIONS WITHOUT THE EXPRESS WRITTEN APPROVAL AND PARTICIPATION OF RDG PLANNING & DESIGN, INC. REPRODUCTION IS PROHIBITED. THIS DRAWING MAY NOT REPRESENT ALL CHANGES THAT HAVE OCCURRED DURING BID OR CONSTRUCTION PHASES. CONSTRUCTION DOCUMENTS, ADDENDA, AND CHANGE DOCUMENTS REMAIN THE OFFICIAL CONSTRUCTION DOCUMENTS.

BUILDING 1 (13-15 SOUTH CENTER) DEMOLITION

A05.01a

SHEET SIZE: 11"x17"

MATERIAL LEGEND	
AWNING	
	"PATTERN TBD" - SUNBRELLA MODEL "TBD"
PAINT COLORS	
	"COLOR TBD" - SHERWIN WILLIAMS "SW TBD"
	"COLOR TBD" - SHERWIN WILLIAMS "SW TBD"
	"COLOR TBD" - SHERWIN WILLIAMS "SW TBD"

NOTE: DUE TO VARIATIONS IN PRINTERS AND RESOLUTION SETTINGS, THE SAMPLES SHOWN HERE ARE FOR REFERENCE ONLY. FOR A HIGHER QUALITY MATCH REFERENCE ACTUAL SAMPLES.

THIRD FLOOR ("MEZZANINE")

SECOND FLOOR

INTERIOR WINDOW CONDITIONS AT EAST FACADE - BUILDING #1 (N.T.S.)

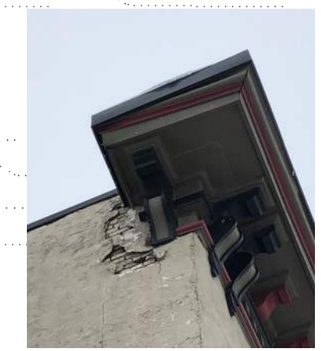

SOUTH SIDE (N.T.S.)

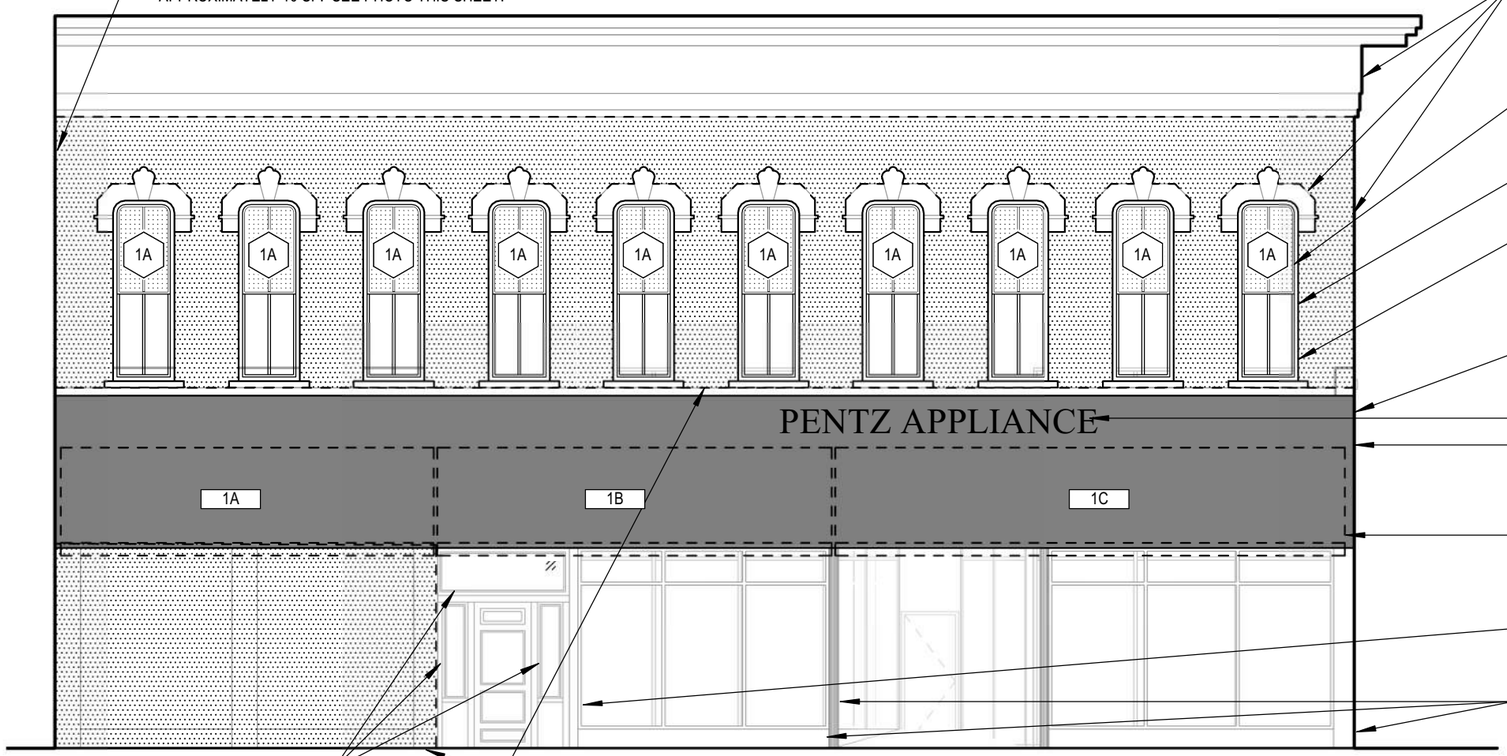

MAKE REPAIRS TO PLASTER AT SOUTH SIDE; ASSUME APPROXIMATELY 10 SF. SEE PHOTO THIS SHEET.

PAINT BRICK, CORNICE AND DECORATIVE WINDOW HOODS. COLORS TBD. ASSUME THREE COLORS. REFERENCE PHOTO ABOVE FOR LEVEL OF DETAIL.

PROVIDE DECORATIVE FILM OVERLAY AT UPPER SASHES. NOTE MEZZANINE AT SECOND FLOOR.

REHABILITATE TEN (10) WINDOWS; PAINT COLOR TBD.

ALTERNATE #4: PROVIDE TEN (10) OPERABLE STORM WINDOWS AT EACH EXISTING WINDOW. PAINT COLOR TBD.

PAINT TRANSOM AREA; PAINT COLOR TBD.

ALTERNATE #1: REMOVE LOOSE PLASTER BEHIND EXISTING CANOPY; PROVIDE NEW SKIM COAT TO ENTIRE AREA; PAINT COLOR TBD.

ALTERNATE #1: PROVIDE THREE (3) MOTORIZED AWNINGS.

ALTERNATE #1:
- ABOVE AWNINGS: PROVIDE 15" FLAT CUT METAL LETTERING, BACKLIT: "PENTZ APPLIANCE"; DARK BRONZE, FONT: TIMES NEW ROMAN.
- AT AWNING VALANCE: PROVIDE 5" LETTERING, WHITE. FONT: TIMES NEW ROMAN. ASSUME 3-5 WORDS PER AWNING VALANCE.
- AT STOREFRONT: PROVIDE VINYL 6" LETTERING, WHITE. FONT: TIMES NEW ROMAN. ASSUME APPROXIMATELY 8 WORDS.

REHABILITATE EXISTING DOOR, SIDELIGHTS AND TRANSOM. PAINT COLOR TBD.

PAINT COLUMNS, BRICK BELOW STOREFRONT AND SIDE (AREAS WHERE BRICK IS CURRENTLY PAINTED); PAINT COLOR TBD.

PROVIDE NEW GLASS AT TRANSOM AND SIDELIGHT WINDOWS

REPOINT ALL BRICK AT FRONT FACADE. ASSUME 100 SF OF REPLACEMENT BRICK AT DAMAGED AREAS TO MATCH EXISTING BRICK.

ROUTE POWER FOR AWNINGS TO EXISTING ELECTRICAL PANEL. INSTALL FIXTURES ACCORDING TO MANUFACTURER'S INSTALLATION INSTRUCTIONS AND IN ACCORDANCE WITH THE NATIONAL ELECTRICAL CODE.

A1 BUILDING 1: 13-15 SOUTH CENTER STREET - IMPROVEMENTS

1/8" = 1'-0"

PDF CREATED ON: 2/26/2023 3:21:30 PM

CONSTRUCTION DOCUMENTS

MARSHALLTOWN FACADE REHABILITATION

RDG PLANNING • DESIGN

ARCHITECT
RDG Planning & Design
301 Grand Avenue
Des Moines, Iowa 50309-1718
Phone: 515.288.3141
www.rdgusa.com

MARSHALLTOWN MORE THAN EVER

REV	DATE	DESCRIPTION

ISSUED: **FEBRUARY 20, 2023**

RDG PROJ. NO: **3005.009.00**

©2023 **RDG Planning & Design**

THESE DOCUMENTS HAVE BEEN PREPARED BY RDG PLANNING & DESIGN, INC. SPECIFICALLY FOR THE:

MARSHALLTOWN FACADE REHABILITATION

PROJECT. THEY ARE NOT SUITABLE FOR USE ON OTHER PROJECTS OR IN OTHER LOCATIONS WITHOUT THE EXPRESS WRITTEN APPROVAL AND PARTICIPATION OF RDG PLANNING & DESIGN, INC. REPRODUCTION IS PROHIBITED. THIS DRAWING MAY NOT REPRESENT ALL CHANGES THAT HAVE OCCURRED DURING BID OR CONSTRUCTION PHASES. CONSTRUCTION DOCUMENTS, ADDENDA, AND CHANGE DOCUMENTS REMAIN THE OFFICIAL CONSTRUCTION DOCUMENTS.

BUILDING 1 (13-15 SOUTH CENTER) IMPROVEMENTS

A05.01b

SHEET SIZE: 11"x17"

GHOST SIGN EXISTING CONDITION (N.T.S.)

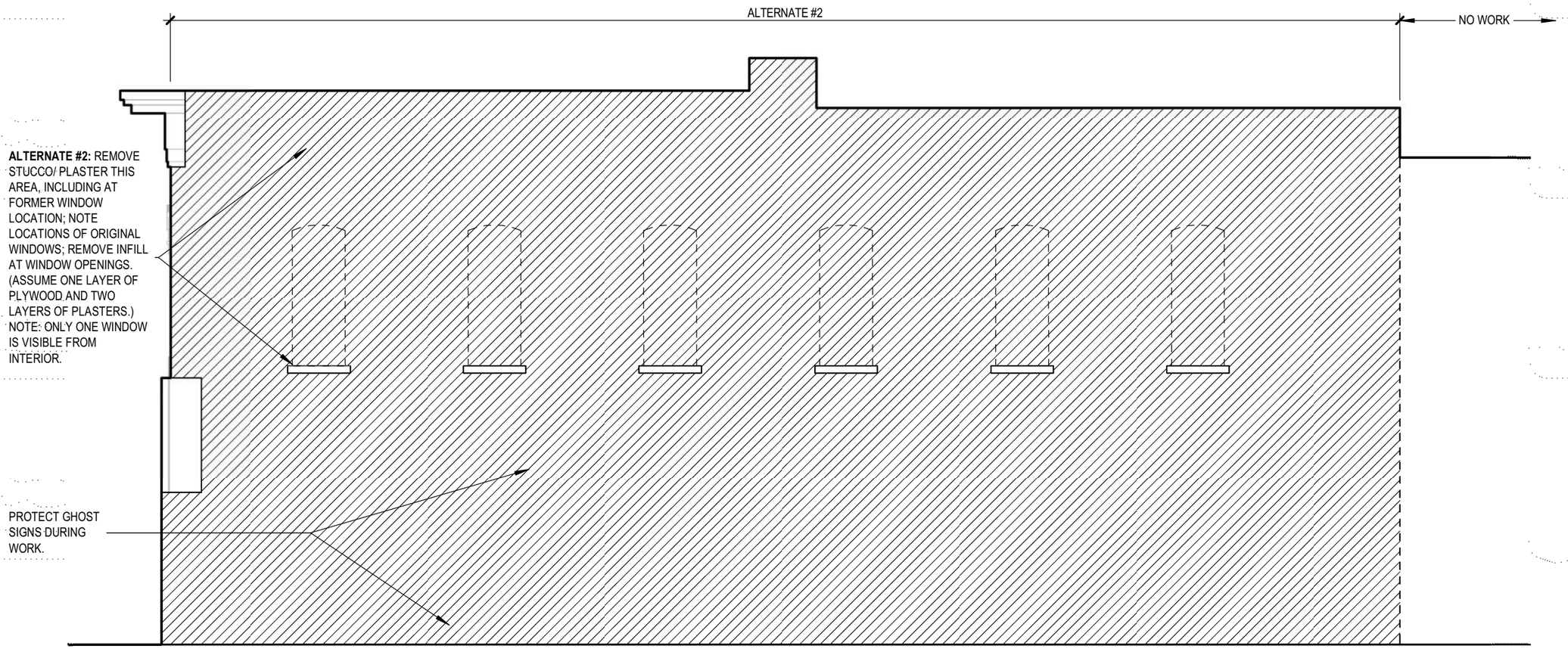

A1 BUILDING 1: 13-15 SOUTH CENTER STREET - NORTH ELEVATION - DEMO

1/8" = 1'-0"

PDF CREATED ON: 2/26/2023 3:21:33 PM

CONSTRUCTION DOCUMENTS

MARSHALLTOWN FACADE REHABILITATION

RDG PLANNING • DESIGN

ARCHITECT
RDG Planning & Design
301 Grand Avenue
Des Moines, Iowa 50309-1718
Phone: 515.288.3141
www.rdgusa.com

MARSHALLTOWN MORE THAN EVER

REV	DATE	DESCRIPTION

ISSUED: FEBRUARY 20, 2023

RDG PROJ. NO: 3005.009.00

©2023 RDG Planning & Design

THESE DOCUMENTS HAVE BEEN PREPARED BY RDG PLANNING & DESIGN, INC. SPECIFICALLY FOR THE:

MARSHALLTOWN FACADE REHABILITATION

PROJECT. THEY ARE NOT SUITABLE FOR USE ON OTHER PROJECTS OR IN OTHER LOCATIONS WITHOUT THE EXPRESS WRITTEN APPROVAL AND PARTICIPATION OF RDG PLANNING & DESIGN, INC. REPRODUCTION IS PROHIBITED. THIS DRAWING MAY NOT REPRESENT ALL CHANGES THAT HAVE OCCURRED DURING BID OR CONSTRUCTION PHASES. CONSTRUCTION DOCUMENTS, ADDENDA, AND CHANGE DOCUMENTS REMAIN THE OFFICIAL CONSTRUCTION DOCUMENTS.

BUILDING 1 (13-15 SOUTH CENTER) DEMOLITION

A05.01c

SHEET SIZE: 11"x17"

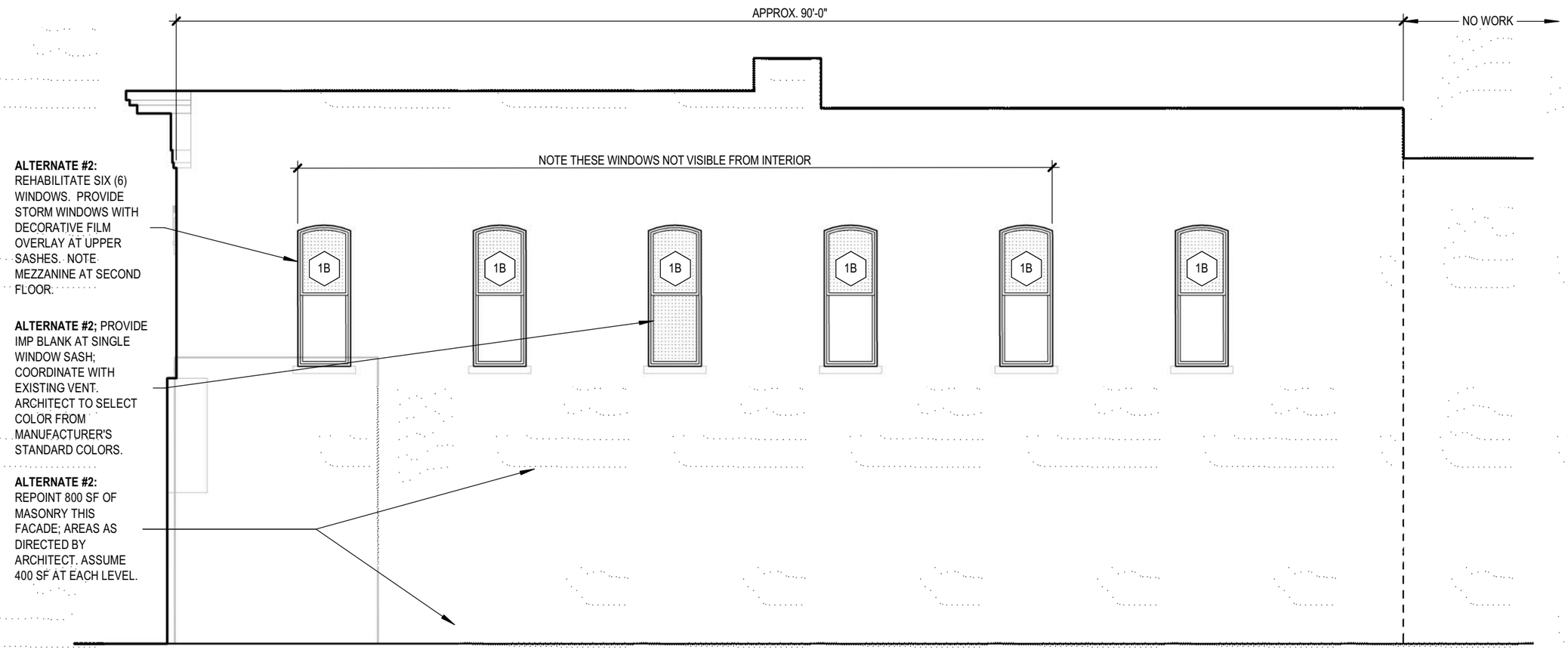

A1 **BUILDING 1: 13-15 S. CENTER STREET - IMPROVEMENTS - NORTH SIDE**

1/8" = 1'-0"

PDF CREATED ON: 2/26/2023 3:21:35 PM

CONSTRUCTION DOCUMENTS

MARSHALLTOWN FACADE REHABILITATION

RDG PLANNING • DESIGN

ARCHITECT
RDG Planning & Design
301 Grand Avenue
Des Moines, Iowa 50309-1718
Phone: 515.288.3141
www.rdgusa.com

MARSHALLTOWN
MORE THAN EVER

REV	DATE	DESCRIPTION

ISSUED: **FEBRUARY 20, 2023**

RDG PROJ. NO: **3005.009.00**

©2023 **RDG Planning & Design**

THESE DOCUMENTS HAVE BEEN PREPARED BY RDG PLANNING & DESIGN, INC. SPECIFICALLY FOR THE:

MARSHALLTOWN FACADE REHABILITATION

PROJECT. THEY ARE NOT SUITABLE FOR USE ON OTHER PROJECTS OR IN OTHER LOCATIONS WITHOUT THE EXPRESS WRITTEN APPROVAL AND PARTICIPATION OF RDG PLANNING & DESIGN, INC. REPRODUCTION IS PROHIBITED. THIS DRAWING MAY NOT REPRESENT ALL CHANGES THAT HAVE OCCURRED DURING BID OR CONSTRUCTION PHASES. CONSTRUCTION DOCUMENTS, ADDENDA, AND CHANGE DOCUMENTS REMAIN THE OFFICIAL CONSTRUCTION DOCUMENTS.

BUILDING 1 (13-15 SOUTH CENTER) IMPROVEMENTS

A05.01d

SHEET SIZE: 11"x17"

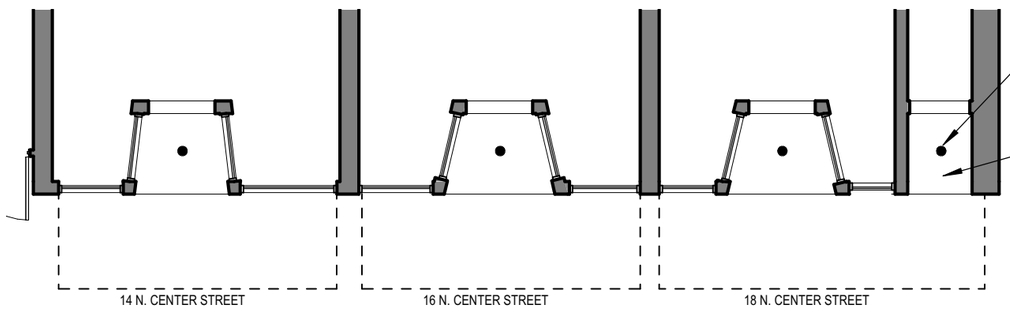

ALTERNATE #3: PROVIDE FOUR (4) CEILING MOUNT LIGHT FIXTURES; ONE AT EACH ENTRY. CENTER IN CEILING. DESIGN HOUSE JELLY JAR MODEL NO. 587238.

PAINT CEILING ENTRIES AT EACH DOOR. PAINT COLOR TO MATCH NEW STOREFRONT COLOR.

ROUTE POWER TO EXISTING ELECTRICAL PANEL. PROVIDE ELECTRONIC TIMER SWITCH (LEVITON LTB12-1LZ, OR EQUAL). INSTALL FIXTURES ACCORDING TO MANUFACTURER'S INSTALLATION INSTRUCTIONS AND IN ACCORDANCE WITH THE NATIONAL ELECTRICAL CODE.

B1 BUILDING 2: 14-16-18 N. CENTER STREET - REFLECTED CEILING PLAN

1/8" = 1'-0"

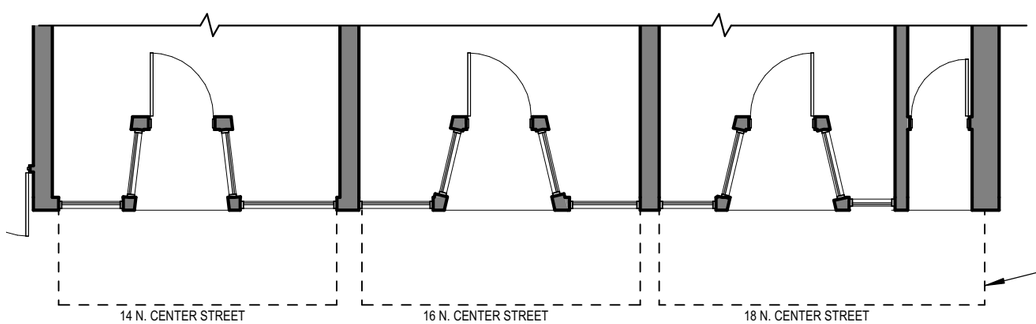

NEW AWNINGS; SEE SHEET A05.02b.

A1 BUILDING 2: 14-16-18 NORHT CENTER STREET - IMPROVEMENTS - PLAN

1/8" = 1'-0"

PDF CREATED ON: 2/26/2023 3:21:35 PM

CONSTRUCTION DOCUMENTS

MARSHALLTOWN FACADE REHABILITATION

RDG PLANNING • DESIGN

ARCHITECT
RDG Planning & Design
301 Grand Avenue
Des Moines, Iowa 50309-1718
Phone: 515.288.3141
www.rdgusa.com

MARSHALLTOWN
MORE THAN EVER

REV	DATE	DESCRIPTION

ISSUED: **FEBRUARY 20, 2023**

RDG PROJ. NO: **3005.009.00**

©2023 **RDG Planning & Design**

THESE DOCUMENTS HAVE BEEN PREPARED BY RDG PLANNING & DESIGN, INC. SPECIFICALLY FOR THE:

MARSHALLTOWN FACADE REHABILITATION

PROJECT. THEY ARE NOT SUITABLE FOR USE ON OTHER PROJECTS OR IN OTHER LOCATIONS WITHOUT THE EXPRESS WRITTEN APPROVAL AND PARTICIPATION OF RDG PLANNING & DESIGN, INC. REPRODUCTION IS PROHIBITED. THIS DRAWING MAY NOT REPRESENT ALL CHANGES THAT HAVE OCCURRED DURING BID OR CONSTRUCTION PHASES. CONSTRUCTION DOCUMENTS, ADDENDA, AND CHANGE DOCUMENTS REMAIN THE OFFICIAL CONSTRUCTION DOCUMENTS.

BUILDING 2 (14-16-18 NORTH CENTER) FLOOR PLANS

A05.02a

SHEET SIZE: 11"x17"

MATERIAL LEGEND	
AWNING	
	2-14: TBD
	2-16: TBD
	2-18: TBD
PAINT COLORS	
	TBD
	TBD

NOTE: DUE TO VARIATIONS IN PRINTERS AND RESOLUTION SETTINGS, THE SAMPLES SHOWN HERE ARE FOR REFERENCE ONLY. FOR A HIGHER QUALITY MATCH REFERENCE ACTUAL SAMPLES.

TYPICAL INTERIOR (2ND FLOOR) CONDITIONS AT BUILDINGS #2 AND #3.

INTERIOR WINDOW CONDITIONS (N.T.S.)

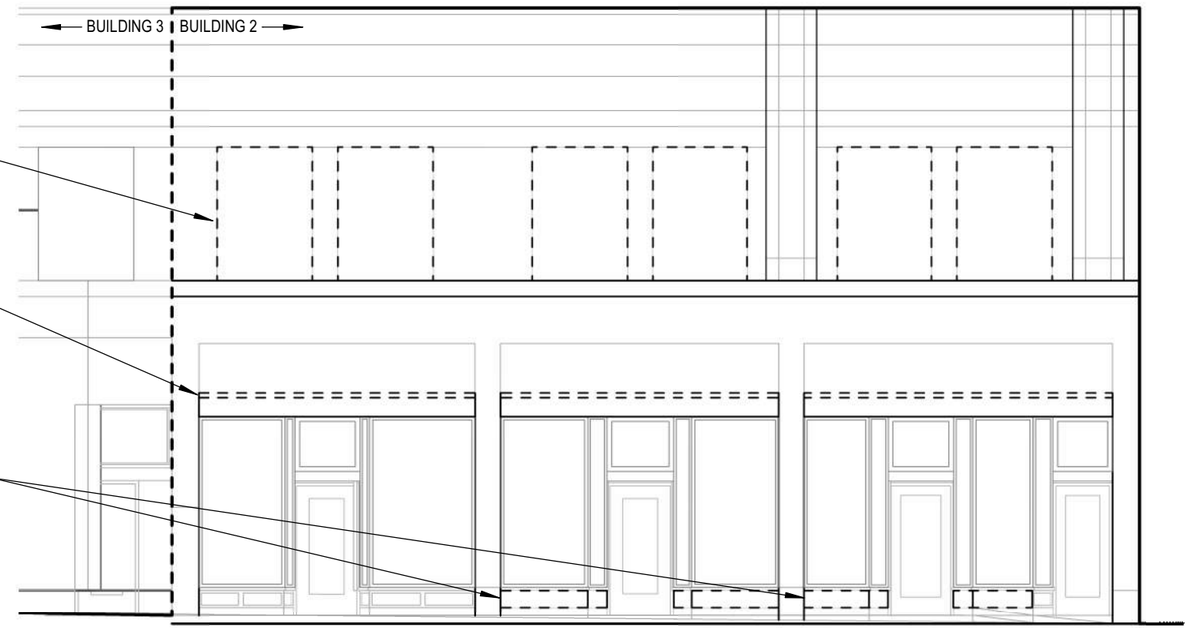

C3 BUILDING 2: 14-16-18 NORTH CENTER STREET - DEMOLITION

1/8" = 1'-0"

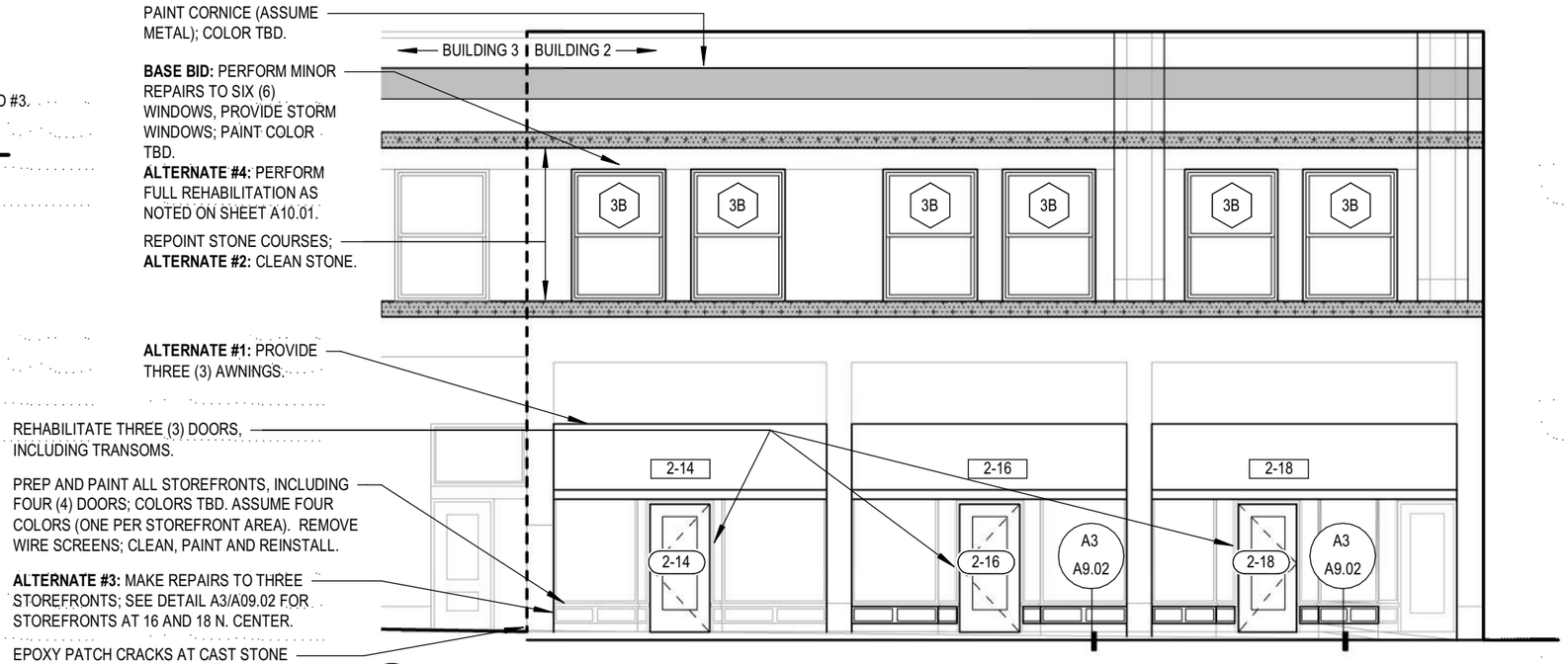

A3 BUILDING 2: 14-16-18 NORTH CENTER STREET - IMPROVEMENTS

1/8" = 1'-0"

PDF CREATED ON: 2/26/2023 3:21:38 PM

CONSTRUCTION DOCUMENTS

MARSHALLTOWN FACADE REHABILITATION

RDG PLANNING • DESIGN

ARCHITECT
RDG Planning & Design
301 Grand Avenue
Des Moines, Iowa 50309-1718
Phone: 515.288.3141
www.rdgusa.com

MARSHALLTOWN MORE THAN EVER

REV	DATE	DESCRIPTION

ISSUED: **FEBRUARY 20, 2023**

RDG PROJ. NO: **3005.009.00**

©2023 **RDG Planning & Design**

THESE DOCUMENTS HAVE BEEN PREPARED BY RDG PLANNING & DESIGN, INC. SPECIFICALLY FOR THE:

MARSHALLTOWN FACADE REHABILITATION

PROJECT. THEY ARE NOT SUITABLE FOR USE ON OTHER PROJECTS OR IN OTHER LOCATIONS WITHOUT THE EXPRESS WRITTEN APPROVAL AND PARTICIPATION OF RDG PLANNING & DESIGN, INC. REPRODUCTION IS PROHIBITED. THIS DRAWING MAY NOT REPRESENT ALL CHANGES THAT HAVE OCCURRED DURING BID OR CONSTRUCTION PHASES. CONSTRUCTION DOCUMENTS, ADDENDA, AND CHANGE DOCUMENTS REMAIN THE OFFICIAL CONSTRUCTION DOCUMENTS.

BUILDING 2 (14-16-18 NORTH CENTER)

A05.02b

SHEET SIZE: 11"x17"

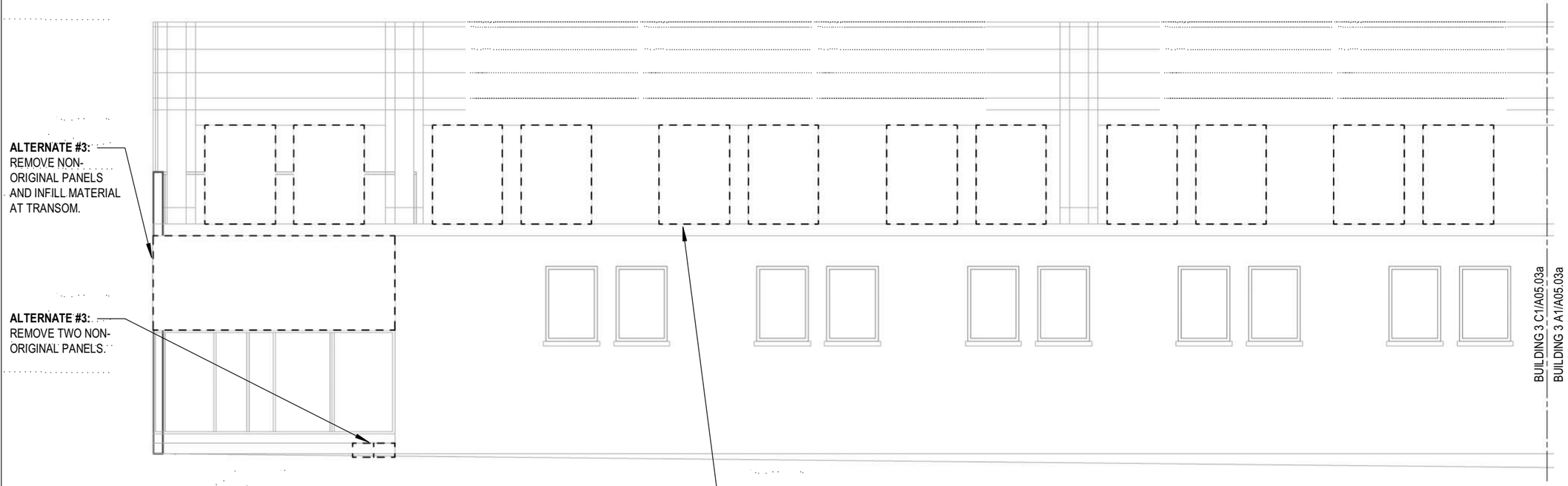

C1 **BUILDING 3: 1 WEST MAIN STREET - EAST ELEVATION - DEMO**
1/8" = 1'-0"

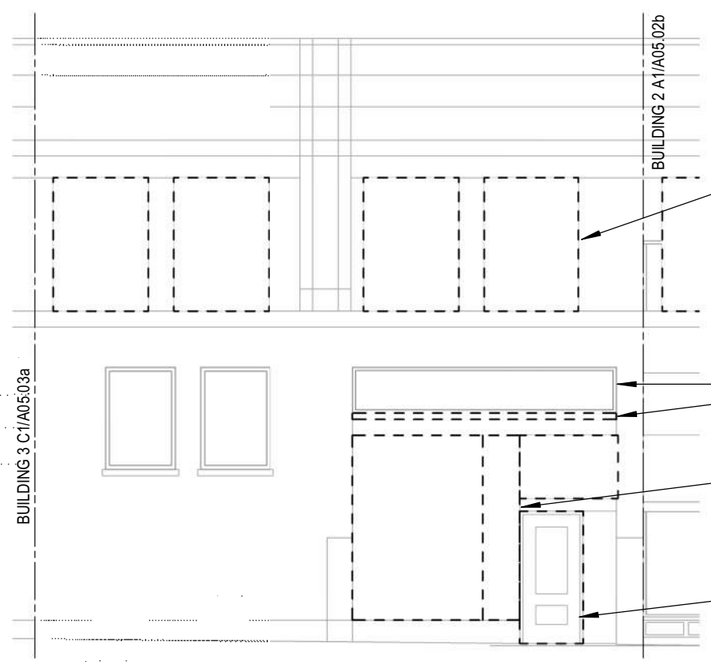

A1 **BUILDING 3: 1 WEST MAIN STREET - EAST ELEVATION - DEMO**
1/8" = 1'-0"

REMOVE PLYWOOD INFILL AT ALL SECOND FLOOR WINDOWS. (QTY: 22)

ALTERNATE #3: REMOVE NON-ORIGINAL PANELS AND INFILL MATERIAL AND SPEAKERS AT TRANSOM; SALVAGE TWO PANELS FOR REUSE.

REMOVE AWNING COVER; REATTACH LOOSE TRIM.

ALTERNATE #4: REMOVE PANELING.

REMOVE AND SALVAGE SIGN.

ALTERNATE #4: REMOVE DOORS AND PANELING AT TRANSOMS.

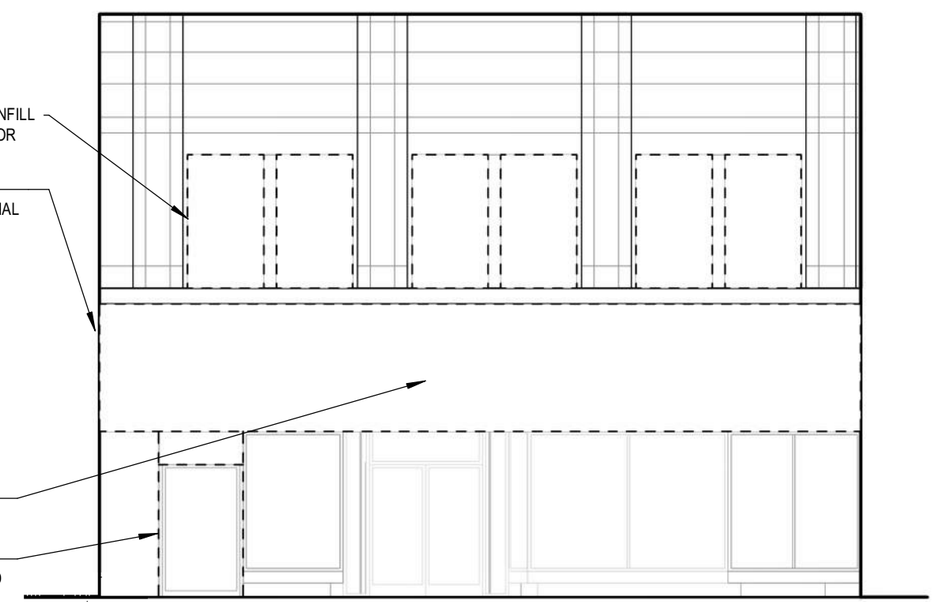

A3 **BUILDING 3: 1 WEST MAIN STREET - SOUTH ELEVATION - DEMO**
1/8" = 1'-0"

PDF CREATED ON: 2/26/2023 3:23:34 PM

CONSTRUCTION DOCUMENTS

MARSHALLTOWN FACADE REHABILITATION

RDG PLANNING • DESIGN

ARCHITECT
RDG Planning & Design
301 Grand Avenue
Des Moines, Iowa 50309-1718
Phone: 515.288.3141
www.rdgusa.com

MARSHALLTOWN
MORE THAN EVER

REV	DATE	DESCRIPTION

ISSUED: **FEBRUARY 20, 2023**

RDG PROJ. NO: **3005.009.00**

©2023 **RDG Planning & Design**

THESE DOCUMENTS HAVE BEEN PREPARED BY RDG PLANNING & DESIGN, INC. SPECIFICALLY FOR THE:

MARSHALLTOWN FACADE REHABILITATION

PROJECT. THEY ARE NOT SUITABLE FOR USE ON OTHER PROJECTS OR IN OTHER LOCATIONS WITHOUT THE EXPRESS WRITTEN APPROVAL AND PARTICIPATION OF RDG PLANNING & DESIGN, INC. REPRODUCTION IS PROHIBITED. THIS DRAWING MAY NOT REPRESENT ALL CHANGES THAT HAVE OCCURRED DURING BID OR CONSTRUCTION PHASES. CONSTRUCTION DOCUMENTS, ADDENDA, AND CHANGE DOCUMENTS REMAIN THE OFFICIAL CONSTRUCTION DOCUMENTS.

BUILDING 3 (1 WEST MAIN) DEMOLITION

A05.03a

SHEET SIZE: 11"x17"

MATERIAL LEGEND	
DOOR	
	DOOR 3A: CLEAR ANODIZED ALUMINUM
WALK OFF CARPET	
	B.O.D.: MILIKEN OBEX GRID - VINYL CLOSED
PAINT COLORS	
	"SNOWBOUND" - SHERWIN WILLIAMS "SW 6258"
	TBD

NOTE: DUE TO VARIATIONS IN PRINTERS AND RESOLUTION SETTINGS, THE SAMPLES SHOWN HERE ARE FOR REFERENCE ONLY. FOR A HIGHER QUALITY MATCH REFERENCE ACTUAL SAMPLES.

TYPICAL CONDITIONS AT BUILDING #2 AND #3.

INTERIOR WINDOW CONDITIONS (N.T.S.)

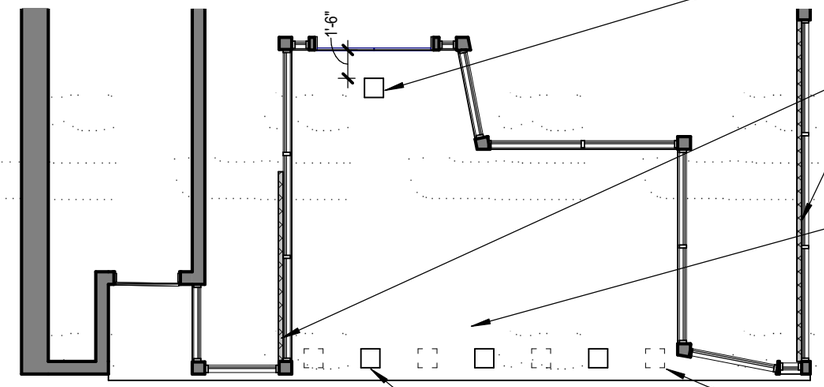

ALTERNATE #3: PROVIDE NEW LIGHT FIXTURE, CENTER ON DOOR.

ALTERNATE #3: PROVIDE TRIM AT MISSING LOCATIONS AT DISPLAY WINDOW CEILING; AREAS HIGHLIGHTED; PAINT ALL TRIM TO MATCH EXISTING.

ALTERNATE #3: PATCH CEILING AT FRONT ENTRY WITH NEW SKIM COAT; PAINT SW 7004 "SNOWBOUND."

ALTERNATE #3: REPLACE THREE (3) LIGHT FIXTURES AT EXISTING LOCATIONS.

ALTERNATE #3: REMOVE FOUR (4) LIGHT FIXTURES; PATCH OPENINGS.

C3 BUILDING 3: 1 WEST MAIN STREET - REFLECTED CEILING PLAN

1/8" = 1'-0"

ROUTE POWER TO EXISTING ELECTRICAL PANEL. PROVIDE ELECTRONIC TIMER SWITCH (LEVITON LTB12-1LZ, OR EQUAL). INSTALL FIXTURES ACCORDING TO MANUFACTURER'S INSTALLATION INSTRUCTIONS AND IN ACCORDANCE WITH THE NATIONAL ELECTRICAL CODE.

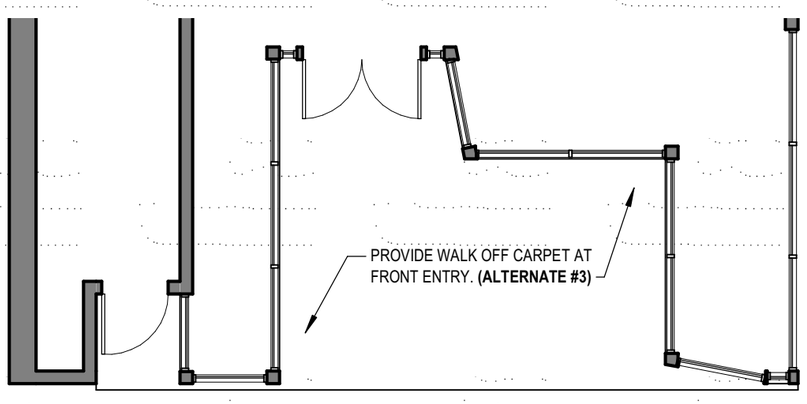

PROVIDE WALK OFF CARPET AT FRONT ENTRY. **(ALTERNATE #3)**

A1 BUILDING 3: 1 WEST MAIN STREET - IMPROVEMENTS - PLAN

1/8" = 1'-0"

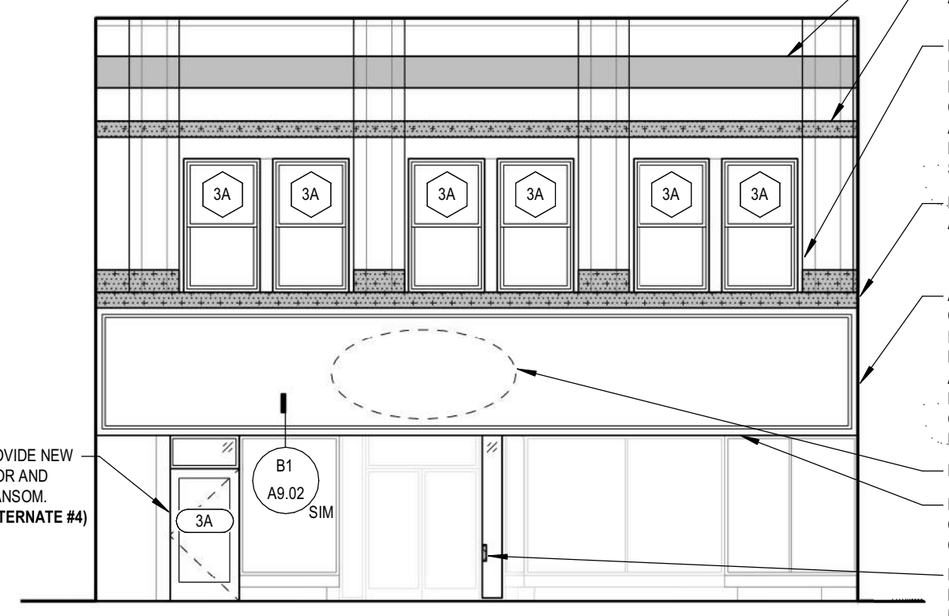

PROVIDE NEW DOOR AND TRANSOM. **(ALTERNATE #4)**

PAINT CORNICE (ASSUME METAL); COLOR TBD.

REPOINT STONE COURSES. **ALTERNATE #2:** CLEAN STONE.

BASE BID: PERFORM MINOR REPAIRS TO SIX (6) WINDOWS, PROVIDE STORM WINDOWS; PAINT COLOR TBD. **ALTERNATE #4:** PERFORM FULL REHABILITATION AS NOTED ON SHEET A10.01.

REPOINT STONE COURSES. **ALTERNATE #2:** CLEAN STONE.

ALTERNATE #3: PROVIDE CEMENT BOARD OVER NEW FURRING AND WEATHER BARRIER; BUTT JOINT PANELS AND PROVIDE 4" TRIM AROUND PERIMETER ONLY; APPLY CEMENTITIOUS COATING. SEE DTL B1/A09.02 (SIM).

REINSTALL SIGNAGE.

PAINT TRANSOM AREA, TWO COLORS (FIELD AND TRIM). COLOR TBD.

PROVIDE MAIL SLOT (CR LAURENCE 3" x 11 1/2" NO-DRAFT MAIL SLOT OR SIMILAR) IN NEW GLAZING, EXISTING FRAMING.

A3 BUILDING 3: 1 WEST MAIN STREET - SOUTH ELEVATION - IMPROVEMENTS

1/8" = 1'-0"

PDF CREATED ON: 2/26/2023 3:23:37 PM

CONSTRUCTION DOCUMENTS

MARSHALLTOWN FACADE REHABILITATION

RDG PLANNING • DESIGN

ARCHITECT
RDG Planning & Design
301 Grand Avenue
Des Moines, Iowa 50309-1718
Phone: 515.288.3141
www.rdgusa.com

MARSHALLTOWN MORE THAN EVER

REV	DATE	DESCRIPTION

ISSUED: **FEBRUARY 20, 2023**

RDG PROJ. NO: **3005.009.00**

©2023 **RDG Planning & Design**

THESE DOCUMENTS HAVE BEEN PREPARED BY RDG PLANNING & DESIGN, INC. SPECIFICALLY FOR THE:

MARSHALLTOWN FACADE REHABILITATION

PROJECT. THEY ARE NOT SUITABLE FOR USE ON OTHER PROJECTS OR IN OTHER LOCATIONS WITHOUT THE EXPRESS WRITTEN APPROVAL AND PARTICIPATION OF RDG PLANNING & DESIGN, INC. REPRODUCTION IS PROHIBITED. THIS DRAWING MAY NOT REPRESENT ALL CHANGES THAT HAVE OCCURRED DURING BID OR CONSTRUCTION PHASES. CONSTRUCTION DOCUMENTS, ADDENDA, AND CHANGE DOCUMENTS REMAIN THE OFFICIAL CONSTRUCTION DOCUMENTS.

BUILDING 3 (1 WEST MAIN) IMPROVEMENTS

A05.03b

SHEET SIZE: 11"x17"

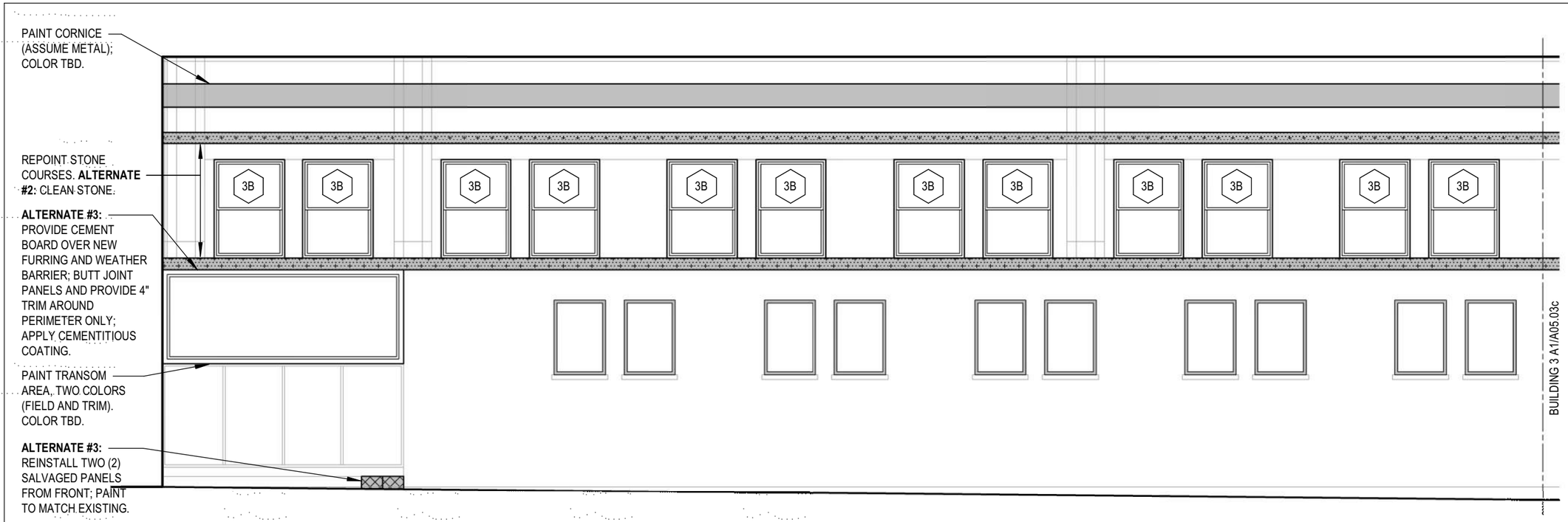

C1 **BUILDING 2: 1 W. MAIN STREET - EAST ELEVATION - IMPROVEMENTS**
1/8" = 1'-0"

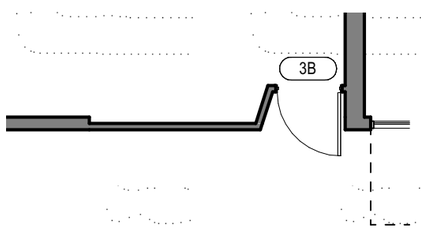

A1 **BUILDING 3: 1 W. MAIN STREET - EAST ELEVATION**
1/8" = 1'-0"

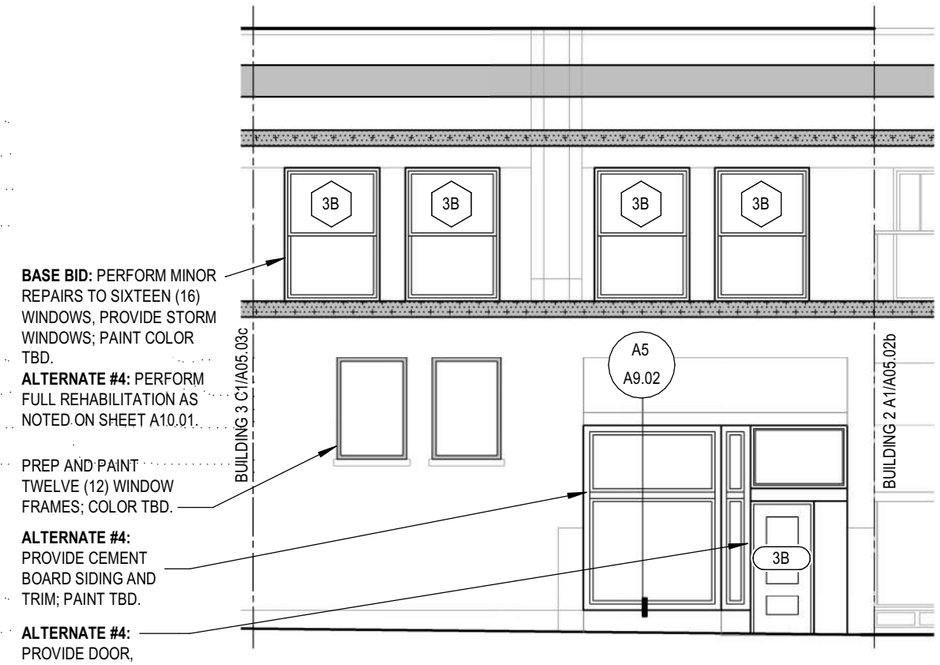

A3 **BUILDING 2: 1 W. MAIN - EAST ELEVATION - IMPROVEMENTS**
1/8" = 1'-0"

PDF CREATED ON: 2/26/2023 3:23:39 PM

CONSTRUCTION DOCUMENTS

MARSHALLTOWN FACADE REHABILITATION

RDG PLANNING • DESIGN

ARCHITECT
RDG Planning & Design
301 Grand Avenue
Des Moines, Iowa 50309-1718
Phone: 515.288.3141
www.rdgusa.com

MARSHALLTOWN MORE THAN EVER

REV	DATE	DESCRIPTION

ISSUED: **FEBRUARY 20, 2023**

RDG PROJ. NO: **3005.009.00**

©2023 **RDG Planning & Design**

THESE DOCUMENTS HAVE BEEN PREPARED BY RDG PLANNING & DESIGN, INC. SPECIFICALLY FOR THE:
MARSHALLTOWN FACADE REHABILITATION
PROJECT. THEY ARE NOT SUITABLE FOR USE ON OTHER PROJECTS OR IN OTHER LOCATIONS WITHOUT THE EXPRESS WRITTEN APPROVAL AND PARTICIPATION OF RDG PLANNING & DESIGN, INC. REPRODUCTION IS PROHIBITED. THIS DRAWING MAY NOT REPRESENT ALL CHANGES THAT HAVE OCCURRED DURING BID OR CONSTRUCTION PHASES. CONSTRUCTION DOCUMENTS, ADDENDA, AND CHANGE DOCUMENTS REMAIN THE OFFICIAL CONSTRUCTION DOCUMENTS.

BUILDING 3 (1 WEST MAIN) IMPROVEMENTS

A05.03c

SHEET SIZE: 11"x17"

MATERIAL LEGEND	
AWNING	
	"MORELAND TAUPE" - SUNBRELLA MODEL "4880"
DOOR AND WINDOW COLORS	
	WINDOWS: "BROWN" - (B.O.D.: PELLA ALUMINUM-CLAD)
PAINT COLORS	
	"TRICORN BLACK" - SHERWIN WILLIAMS "SW 6258"

NOTE: DUE TO VARIATIONS IN PRINTERS AND RESOLUTION SETTINGS, THE SAMPLES SHOWN HERE ARE FOR REFERENCE ONLY. FOR A HIGHER QUALITY MATCH REFERENCE ACTUAL SAMPLES.

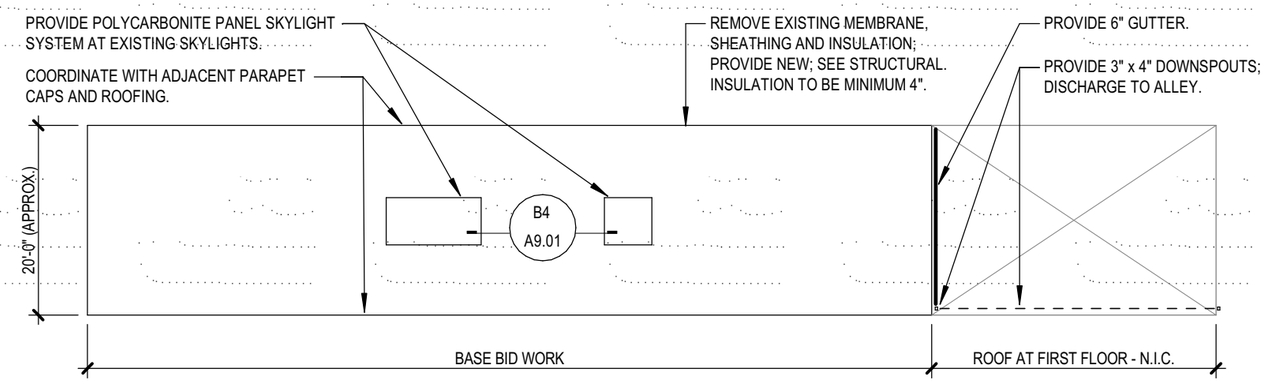

C3 **BUILDING 5: 21 WEST MAIN STREET - ROOF PLAN**
1/16" = 1'-0"

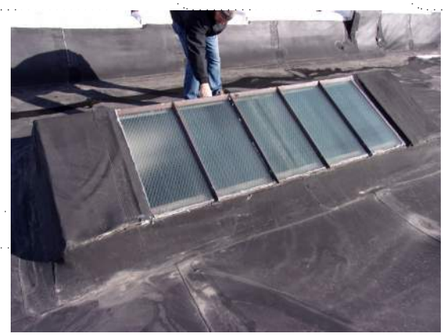

SKYLIGHT AT BUILDING #5

TYPICAL CONDITIONS AT BUILDING #5.

INTERIOR WINDOW CONDITIONS (N.T.S.)

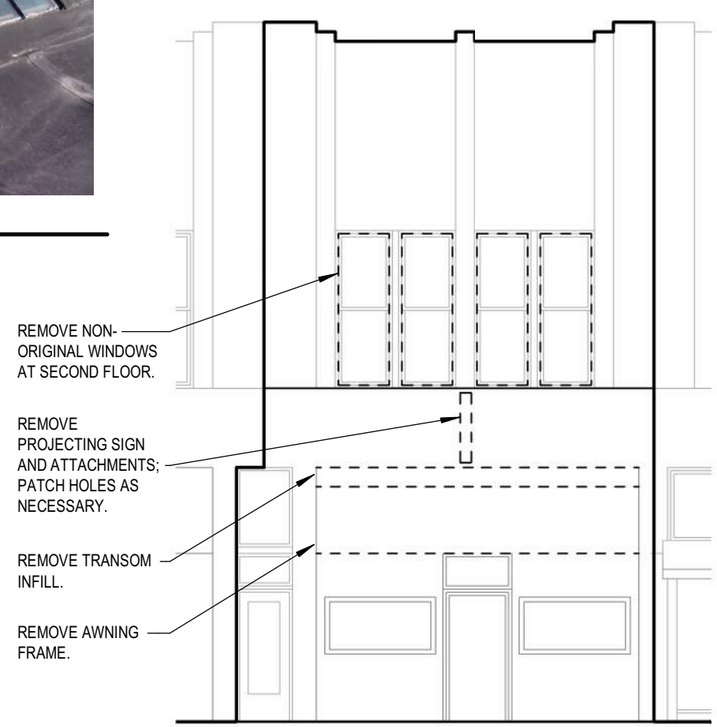

A2 **BUILDING 5: 21 WEST MAIN - DEMO**
1/8" = 1'-0"

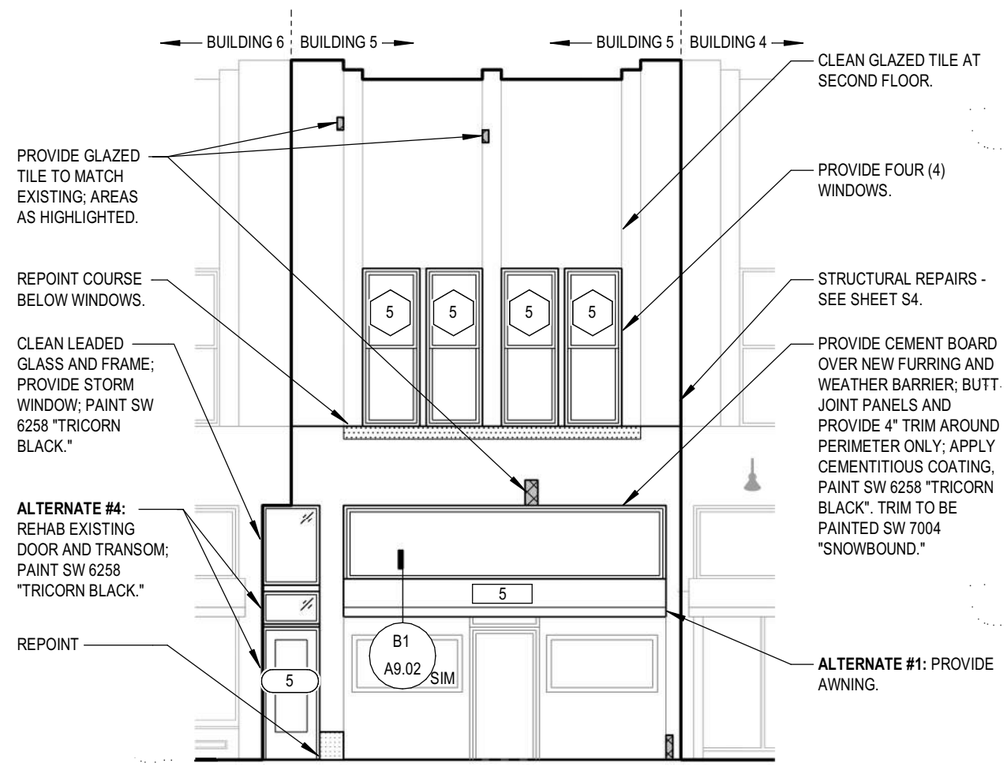

A4 **BUILDING 5: 21 WEST MAIN - IMPROVEMENTS**
1/8" = 1'-0"

PDF CREATED ON: 2/26/2023 3:23:44 PM

CONSTRUCTION DOCUMENTS

MARSHALLTOWN FACADE REHABILITATION

RDG PLANNING • DESIGN

ARCHITECT
RDG Planning & Design
301 Grand Avenue
Des Moines, Iowa 50309-1718
Phone: 515.288.3141
www.rdgusa.com

MARSHALLTOWN MORE THAN EVER

REV	DATE	DESCRIPTION

ISSUED: **FEBRUARY 20, 2023**

RDG PROJ. NO: **3005.009.00**

©2023 **RDG Planning & Design**

THESE DOCUMENTS HAVE BEEN PREPARED BY RDG PLANNING & DESIGN, INC. SPECIFICALLY FOR THE:
MARSHALLTOWN FACADE REHABILITATION
PROJECT. THEY ARE NOT SUITABLE FOR USE ON OTHER PROJECTS OR IN OTHER LOCATIONS WITHOUT THE EXPRESS WRITTEN APPROVAL AND PARTICIPATION OF RDG PLANNING & DESIGN, INC. REPRODUCTION IS PROHIBITED. THIS DRAWING MAY NOT REPRESENT ALL CHANGES THAT HAVE OCCURRED DURING BID OR CONSTRUCTION PHASES. CONSTRUCTION DOCUMENTS, ADDENDA, AND CHANGE DOCUMENTS REMAIN THE OFFICIAL CONSTRUCTION DOCUMENTS.

BUILDING 5 (21 WEST MAIN)

A05.05

SHEET SIZE: 11"x17"

MATERIAL LEGEND	
AWNING	
	"BLACK/TAUPE FANCY" - SUNBRELLA MODEL "4946"
DOOR AND WINDOW COLORS	
	WINDOWS: "BROWN" - (B.O.D.: PELLA ALUMINUM-CLAD)
	STOREFRONT/DOOR: "ANODIZED ALUMINUM"
PAINT COLORS	
	"TRICORN BLACK" - SHERWIN WILLIAMS "SW 6258"

NOTE: DUE TO VARIATIONS IN PRINTERS AND RESOLUTION SETTINGS, THE SAMPLES SHOWN HERE ARE FOR REFERENCE ONLY. FOR A HIGHER QUALITY MATCH REFERENCE ACTUAL SAMPLES.

TYPICAL CONDITIONS AT BUILDING #6.

INTERIOR WINDOW CONDITIONS (N.T.S.)

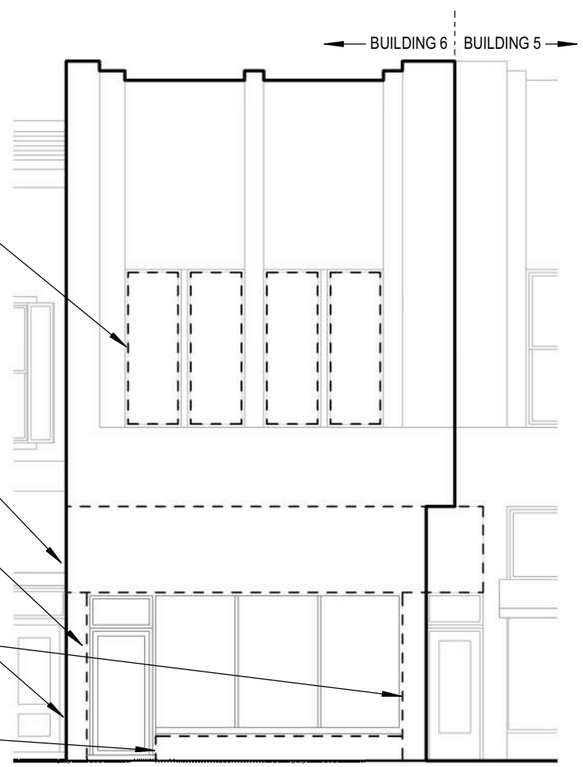

A1 **BUILDING 6: 23 W. MAIN STREET - DEMO**
1/8" = 1'-0"

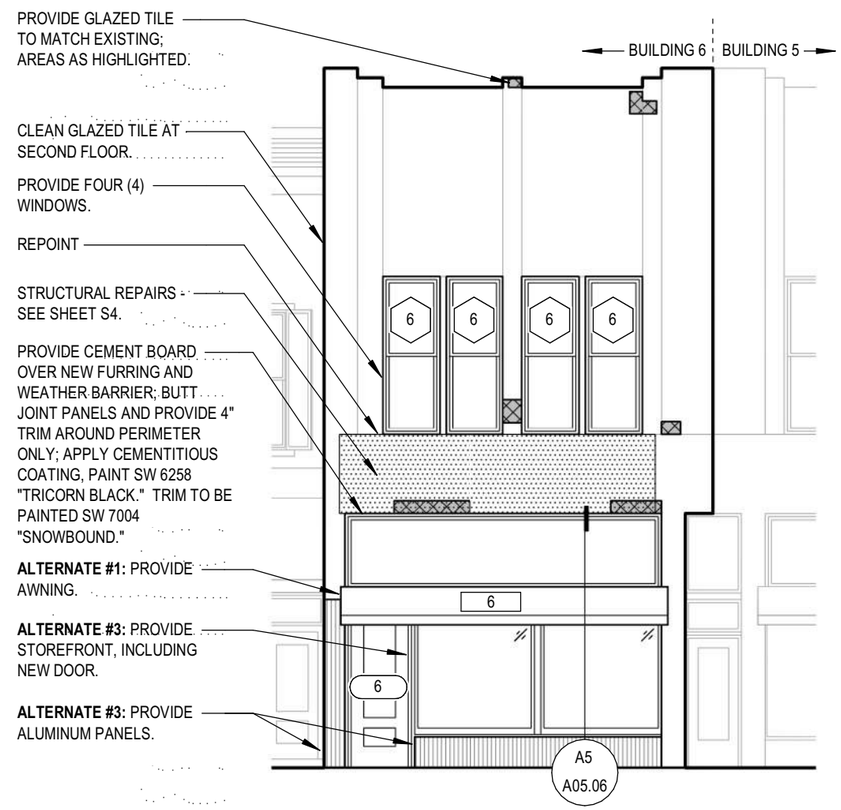

A3 **BUILDING 6: 23 W. MAIN STREET - IMPROVEMENTS**
1/8" = 1'-0"

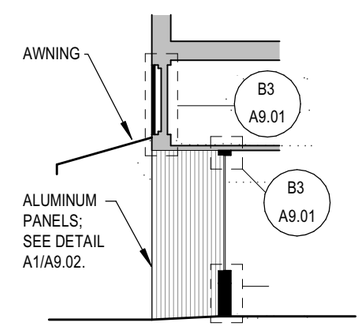

A5 **SECTION A**
1/8" = 1'-0"

PDF CREATED ON: 2/26/2023 3:23:47 PM

CONSTRUCTION DOCUMENTS

MARSHALLTOWN FACADE REHABILITATION

RDG PLANNING • DESIGN

ARCHITECT
RDG Planning & Design
301 Grand Avenue
Des Moines, Iowa 50309-1718
Phone: 515.288.3141
www.rdgusa.com

MARSHALLTOWN MORE THAN EVER

REV	DATE	DESCRIPTION

ISSUED: **FEBRUARY 20, 2023**

RDG PROJ. NO: **3005.009.00**

©2023 **RDG Planning & Design**

THESE DOCUMENTS HAVE BEEN PREPARED BY RDG PLANNING & DESIGN, INC. SPECIFICALLY FOR THE:
MARSHALLTOWN FACADE REHABILITATION
PROJECT. THEY ARE NOT SUITABLE FOR USE ON OTHER PROJECTS OR IN OTHER LOCATIONS WITHOUT THE EXPRESS WRITTEN APPROVAL AND PARTICIPATION OF RDG PLANNING & DESIGN, INC. REPRODUCTION IS PROHIBITED. THIS DRAWING MAY NOT REPRESENT ALL CHANGES THAT HAVE OCCURRED DURING BID OR CONSTRUCTION PHASES. CONSTRUCTION DOCUMENTS, ADDENDA, AND CHANGE DOCUMENTS REMAIN THE OFFICIAL CONSTRUCTION DOCUMENTS.

BUILDING 6 (23 WEST MAIN)

A05.06

SHEET SIZE: 11"x17"

TYPICAL CONDITIONS AT BUILDING #7.

INTERIOR WINDOW CONDITIONS (N.T.S.)

A1 **BUILDING 7: 25 WEST MAIN STREET - EXISTING**

1/8" = 1'-0"

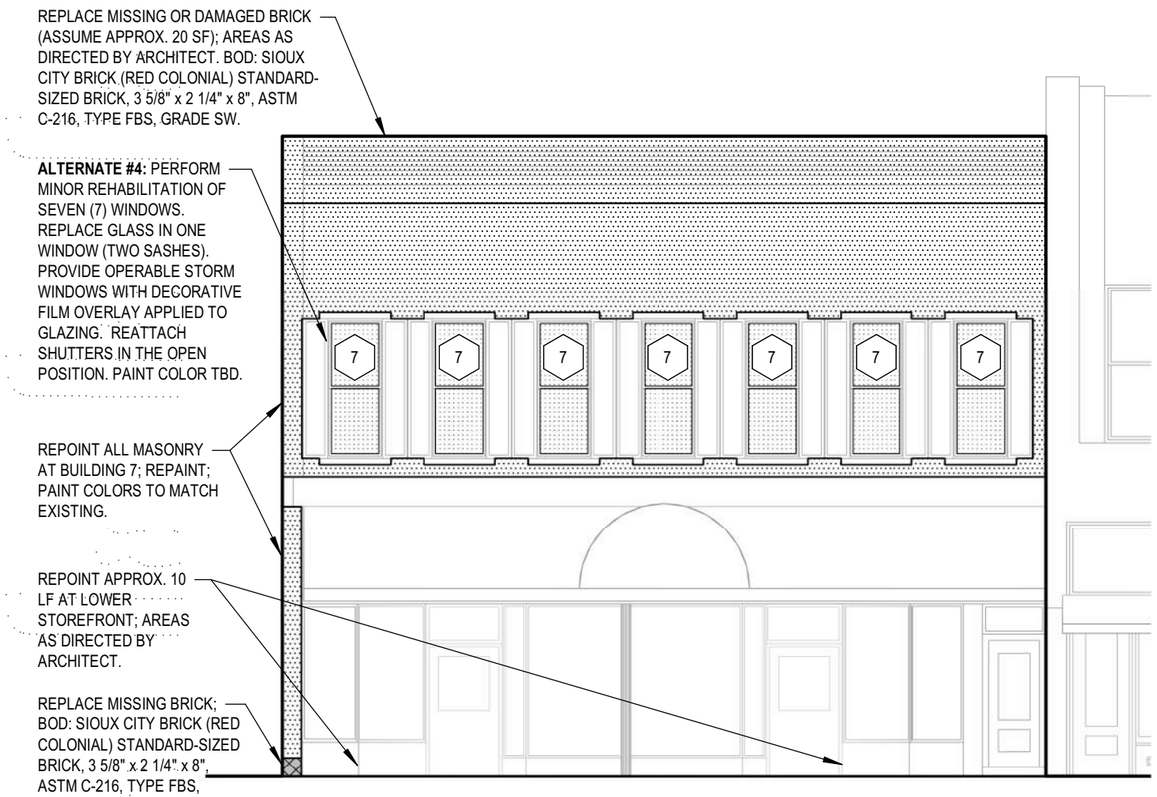

A3 **BUILDING 7: 25 WEST MAIN STREET - IMPROVEMENTS**

1/8" = 1'-0"

PDF CREATED ON: 2/26/2023 3:23:50 PM

CONSTRUCTION DOCUMENTS

MARSHALLTOWN FACADE REHABILITATION

RDG PLANNING • DESIGN

ARCHITECT
RDG Planning & Design
301 Grand Avenue
Des Moines, Iowa 50309-1718
Phone: 515.288.3141
www.rdgusa.com

MARSHALLTOWN MORE THAN EVER

REV	DATE	DESCRIPTION

ISSUED: **FEBRUARY 20, 2023**

RDG PROJ. NO: **3005.009.00**

©2023 **RDG Planning & Design**

THESE DOCUMENTS HAVE BEEN PREPARED BY RDG PLANNING & DESIGN, INC. SPECIFICALLY FOR THE:

MARSHALLTOWN FACADE REHABILITATION

PROJECT. THEY ARE NOT SUITABLE FOR USE ON OTHER PROJECTS OR IN OTHER LOCATIONS WITHOUT THE EXPRESS WRITTEN APPROVAL AND PARTICIPATION OF RDG PLANNING & DESIGN, INC. REPRODUCTION IS PROHIBITED. THIS DRAWING MAY NOT REPRESENT ALL CHANGES THAT HAVE OCCURRED DURING BID OR CONSTRUCTION PHASES. CONSTRUCTION DOCUMENTS, ADDENDA, AND CHANGE DOCUMENTS REMAIN THE OFFICIAL CONSTRUCTION DOCUMENTS.

BUILDING 7 (25 WEST MAIN)

A05.07

SHEET SIZE: 11"x17"

MATERIAL LEGEND	
PAINT COLORS	
	"LIBRARY PEWTER" - SHERWIN WILLIAMS "SW 0038"
	"SNOWBOUND" - SHERWIN WILLIAMS "SW 7004"

NOTE: DUE TO VARIATIONS IN PRINTERS AND RESOLUTION SETTINGS, THE SAMPLES SHOWN HERE ARE FOR REFERENCE ONLY. FOR A HIGHER QUALITY MATCH REFERENCE ACTUAL SAMPLES.

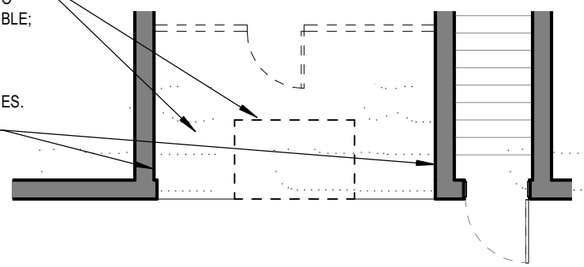

C1 BUILDING 8: 14 W. MAIN STREET - DEMO PLAN
1/8" = 1'-0"

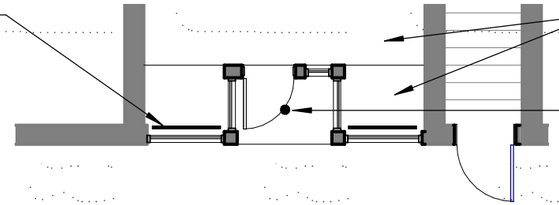

D3 BUILDING 8: 14 W. MAIN STREET - CEILING PLAN
1/8" = 1'-0"

ROUTE POWER TO EXISTING ELECTRICAL PANEL. PROVIDE ELECTRONIC TIMER SWITCH (LEVITON LTB12-1LZ, OR EQUAL). INSTALL FIXTURES ACCORDING TO MANUFACTURER'S INSTALLATION INSTRUCTIONS AND IN ACCORDANCE WITH THE NATIONAL ELECTRICAL CODE.

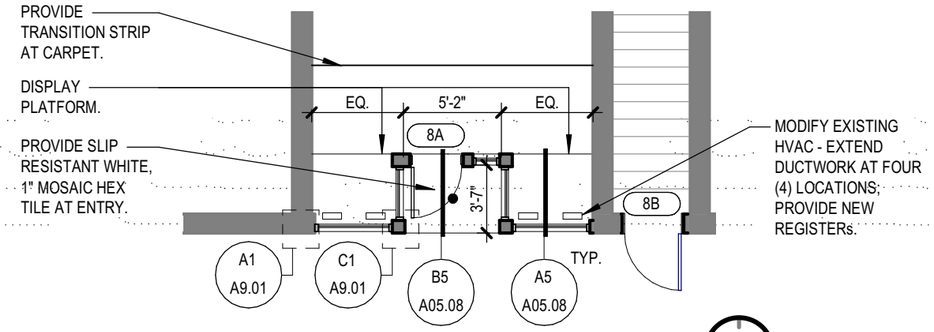

C3 BUILDING 8: 14 W. MAIN STREET - IMPROVEMENTS
1/8" = 1'-0"

BASEMENT CONDITIONS AT HVAC LOCATIONS.

BUILDING #8 BASEMENT (N.T.S.)

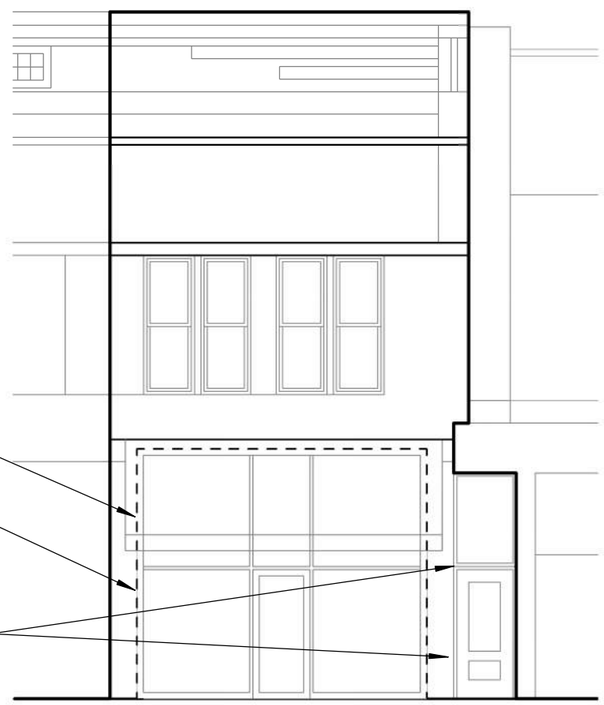

A1 BUILDING 8: 14 W. MAIN STREET - DEMO
1/8" = 1'-0"

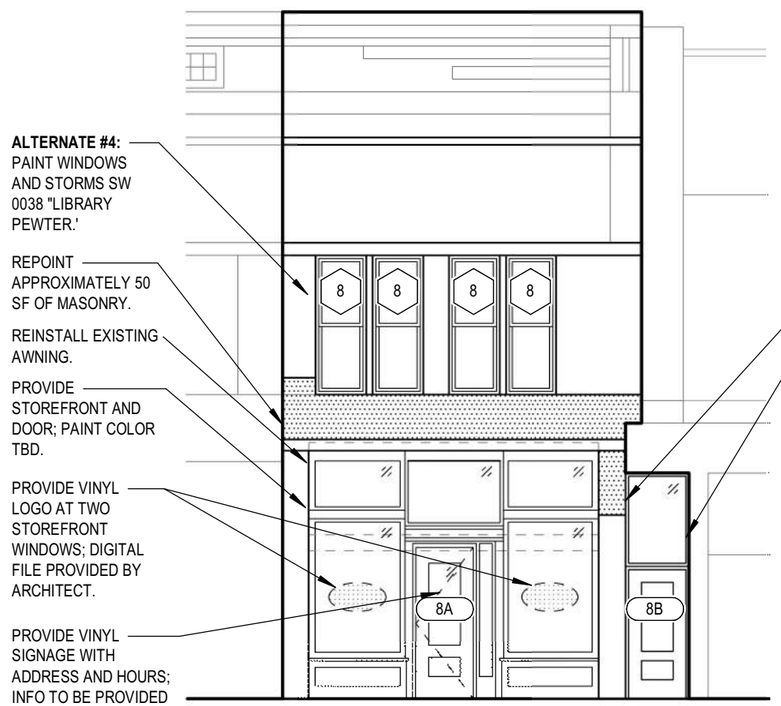

A3 BUILDING 8: 14 W. MAIN STREET - IMPROVEMENTS
1/8" = 1'-0"

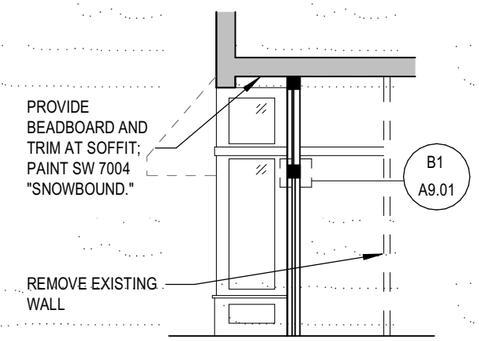

B5 SECTION B
1/8" = 1'-0"

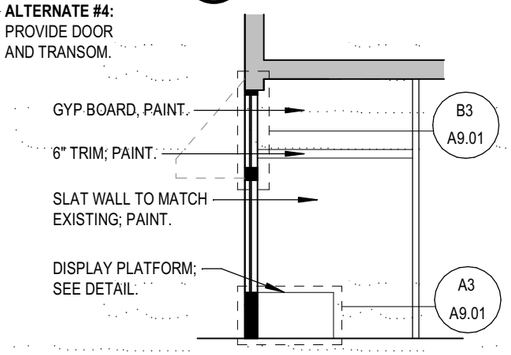

A5 SECTION A
1/8" = 1'-0"

CONSTRUCTION DOCUMENTS

MARSHALLTOWN FACADE REHABILITATION

RDG PLANNING • DESIGN

ARCHITECT
RDG Planning & Design
301 Grand Avenue
Des Moines, Iowa 50309-1718
Phone: 515.288.3141
www.rdgusa.com

MARSHALLTOWN MORE THAN EVER

REV	DATE	DESCRIPTION

ISSUED: **FEBRUARY 20, 2023**

RDG PROJ. NO: **3005.009.00**

©2023 **RDG Planning & Design**

THESE DOCUMENTS HAVE BEEN PREPARED BY RDG PLANNING & DESIGN, INC. SPECIFICALLY FOR THE:

MARSHALLTOWN FACADE REHABILITATION

PROJECT. THEY ARE NOT SUITABLE FOR USE ON OTHER PROJECTS OR IN OTHER LOCATIONS WITHOUT THE EXPRESS WRITTEN APPROVAL AND PARTICIPATION OF RDG PLANNING & DESIGN, INC. REPRODUCTION IS PROHIBITED. THIS DRAWING MAY NOT REPRESENT ALL CHANGES THAT HAVE OCCURRED DURING BID OR CONSTRUCTION PHASES. CONSTRUCTION DOCUMENTS, ADDENDA, AND CHANGE DOCUMENTS REMAIN THE OFFICIAL CONSTRUCTION DOCUMENTS.

BUILDING 8 (14 WEST MAIN)

A05.08

PDF CREATED ON: 2/26/2023 3:23:53 PM

SHEET SIZE: 11"x17"

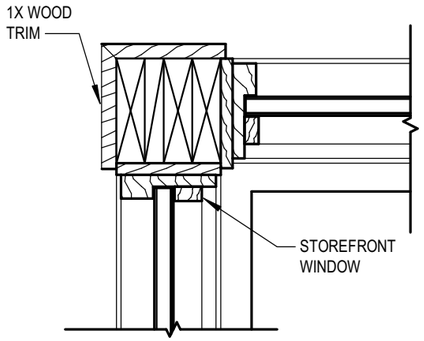

C1 STOREFRONT CORNER DETAIL
1 1/2" = 1'-0"

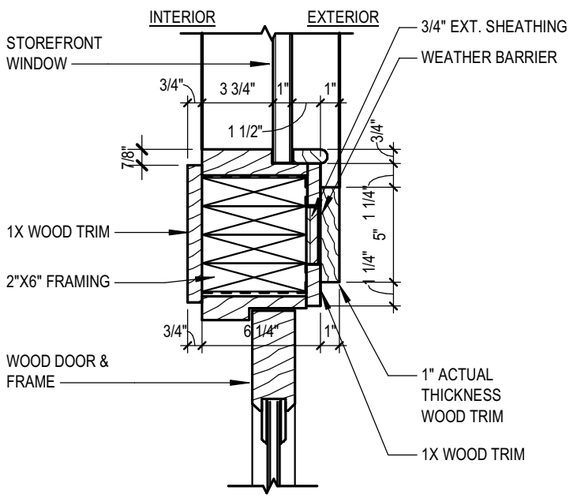

B1 STOREFRONT DOOR TRANSOM DETAIL
1 1/2" = 1'-0"

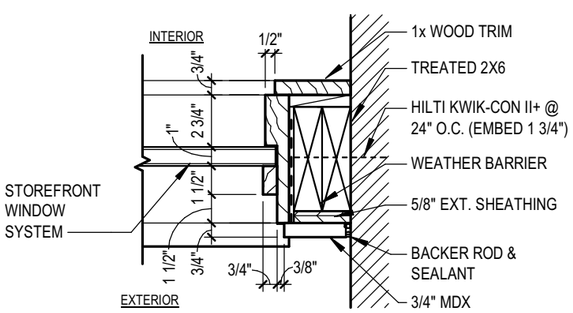

A1 STOREFRONT JAMB DETAIL
1 1/2" = 1'-0"

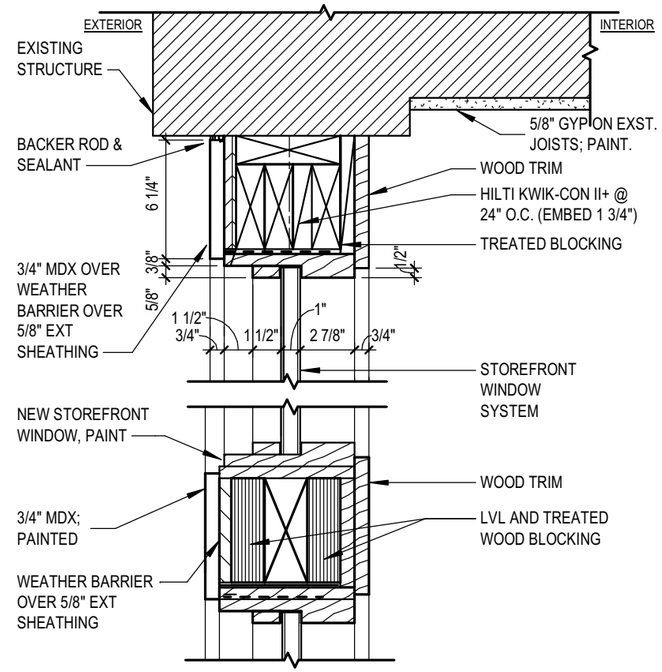

B3 STOREFRONT HEAD AND TRANSOM DETAIL
1 1/2" = 1'-0"

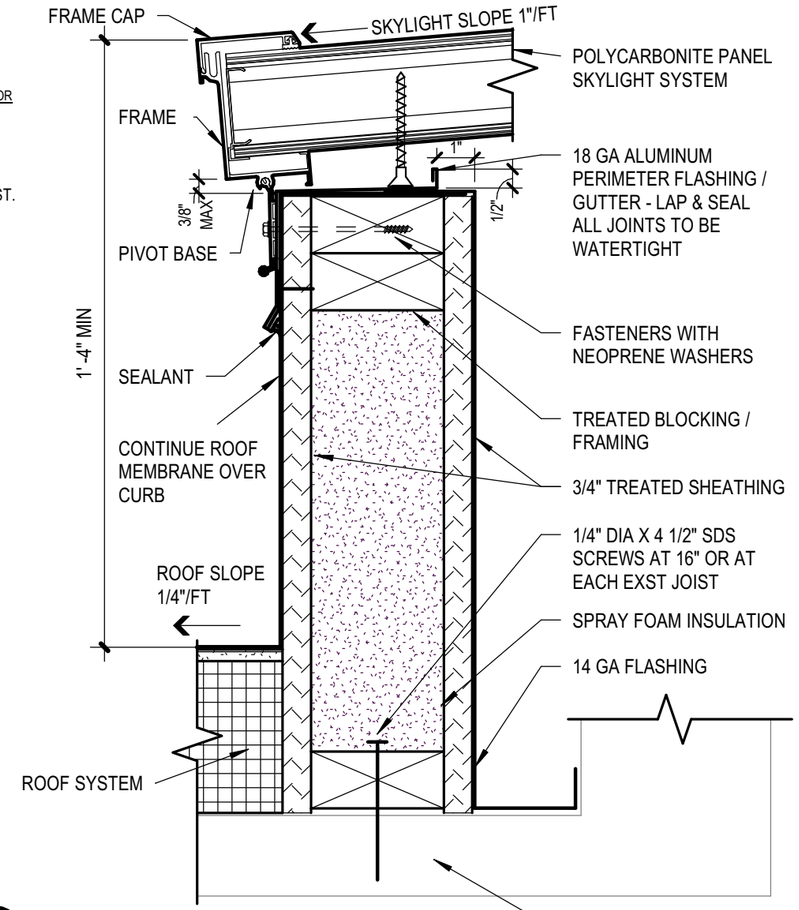

B4 SKYLIGHT CURB
3" = 1'-0"

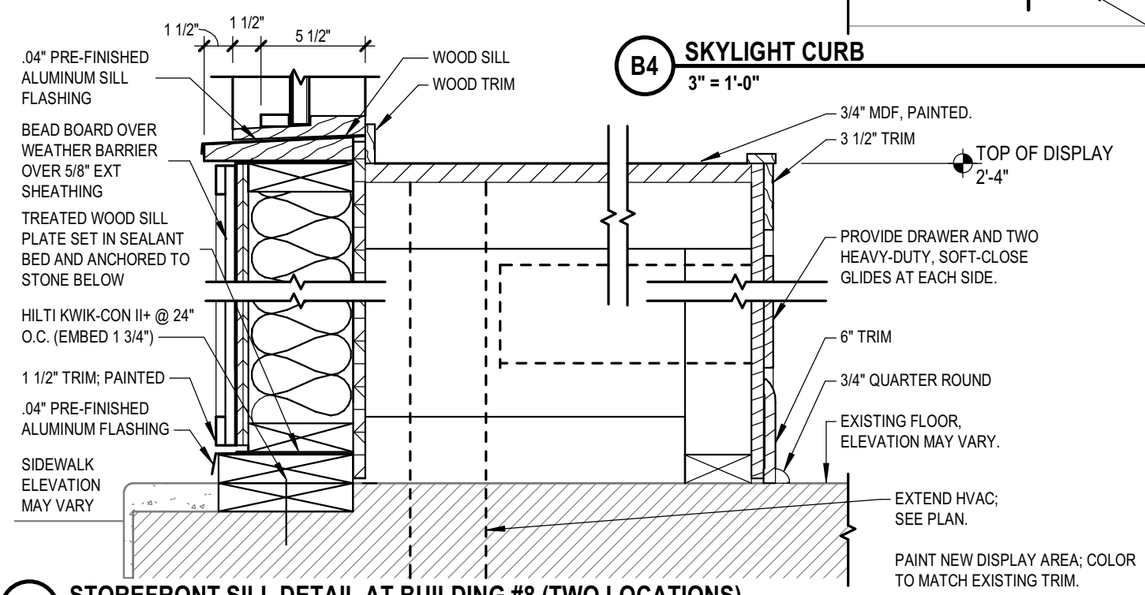

A3 STOREFRONT SILL DETAIL AT BUILDING #8 (TWO LOCATIONS)
1 1/2" = 1'-0"

PDF CREATED ON: 2/26/2023 3:26:06 PM

CONSTRUCTION DOCUMENTS

MARSHALLTOWN FACADE REHABILITATION

RDG PLANNING • DESIGN

ARCHITECT
RDG Planning & Design
301 Grand Avenue
Des Moines, Iowa 50309-1718
Phone: 515.288.3141
www.rdgusa.com

MARSHALLTOWN
MORE THAN EVER

REV	DATE	DESCRIPTION

ISSUED: **FEBRUARY 20, 2023**

RDG PROJ. NO: **3005.009.00**

©2023 **RDG Planning & Design**

THESE DOCUMENTS HAVE BEEN PREPARED BY RDG PLANNING & DESIGN, INC. SPECIFICALLY FOR THE:

MARSHALLTOWN FACADE REHABILITATION

PROJECT. THEY ARE NOT SUITABLE FOR USE ON OTHER PROJECTS OR IN OTHER LOCATIONS WITHOUT THE EXPRESS WRITTEN APPROVAL AND PARTICIPATION OF RDG PLANNING & DESIGN, INC. REPRODUCTION IS PROHIBITED. THIS DRAWING MAY NOT REPRESENT ALL CHANGES THAT HAVE OCCURRED DURING BID OR CONSTRUCTION PHASES. CONSTRUCTION DOCUMENTS, ADDENDA, AND CHANGE DOCUMENTS REMAIN THE OFFICIAL CONSTRUCTION DOCUMENTS.

EXTERIOR DETAILS

A9.01

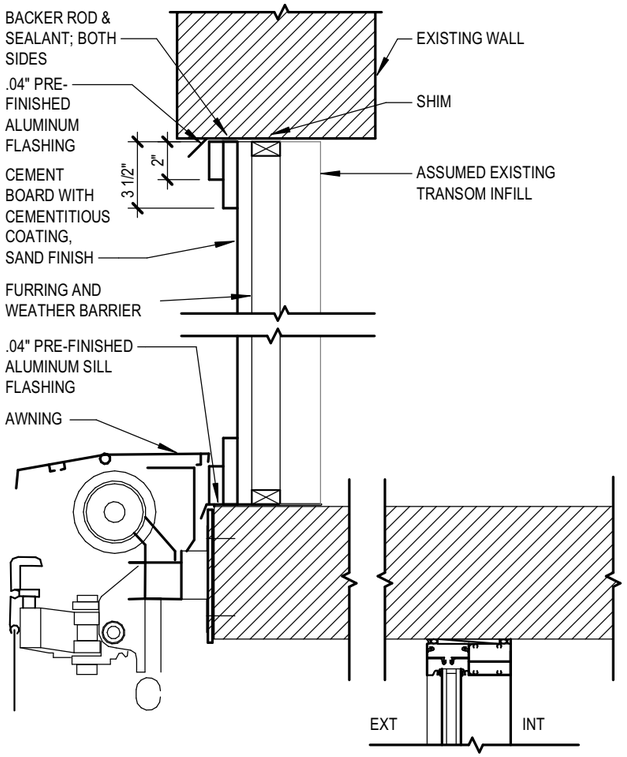

B1 TRANSOM DETAIL
1 1/2" = 1'-0"

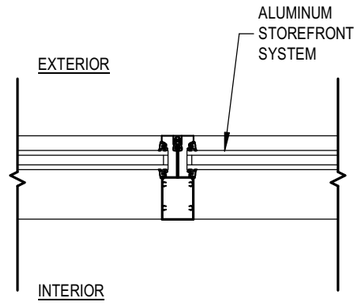

C3 ALUMINUM STOREFRONT MULLION
1 1/2" = 1'-0"

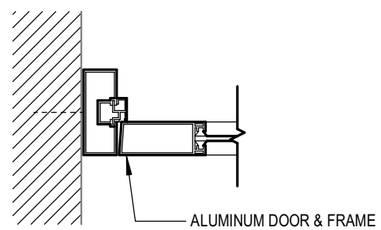

B3 TYPICAL STOREFRONT DOOR JAMB
1 1/2" = 1'-0"

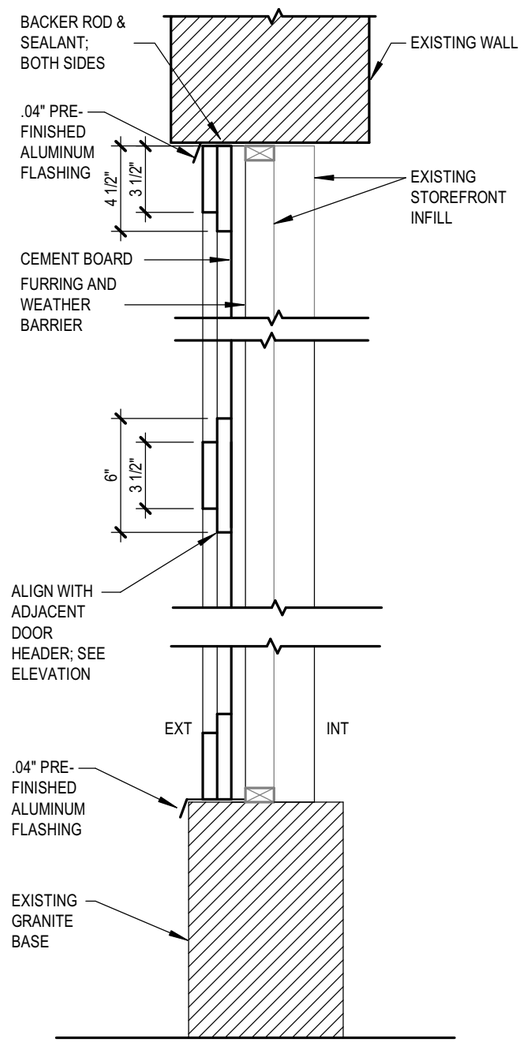

A5 CEMENT BOARD INFILL
1 1/2" = 1'-0"

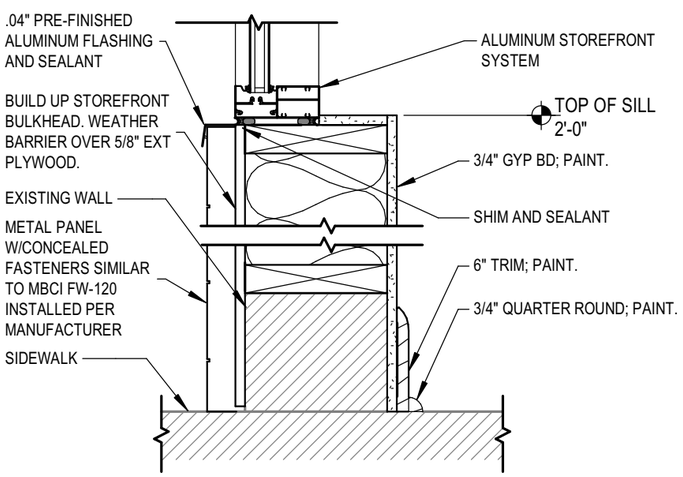

A1 TYPICAL ALUMINUM STOREFRONT SILL DETAIL
1 1/2" = 1'-0"

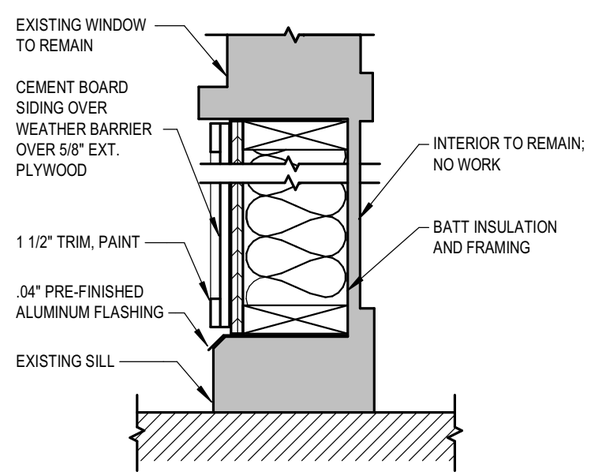

A3 REHAB STOREFRONT SILL
1 1/2" = 1'-0"

CONSTRUCTION DOCUMENTS

MARSHALLTOWN FACADE REHABILITATION

RDG PLANNING • DESIGN

ARCHITECT
RDG Planning & Design
301 Grand Avenue
Des Moines, Iowa 50309-1718
Phone: 515.288.3141
www.rdgusa.com

MARSHALLTOWN
MORE THAN EVER

REV	DATE	DESCRIPTION

ISSUED: **FEBRUARY 20, 2023**

RDG PROJ. NO: **3005.009.00**

©2023 **RDG Planning & Design**

THESE DOCUMENTS HAVE BEEN PREPARED BY RDG PLANNING & DESIGN, INC. SPECIFICALLY FOR THE:

MARSHALLTOWN FACADE REHABILITATION

PROJECT. THEY ARE NOT SUITABLE FOR USE ON OTHER PROJECTS OR IN OTHER LOCATIONS WITHOUT THE EXPRESS WRITTEN APPROVAL AND PARTICIPATION OF RDG PLANNING & DESIGN, INC. REPRODUCTION IS PROHIBITED. THIS DRAWING MAY NOT REPRESENT ALL CHANGES THAT HAVE OCCURRED DURING BID OR CONSTRUCTION PHASES. CONSTRUCTION DOCUMENTS, ADDENDA, AND CHANGE DOCUMENTS REMAIN THE OFFICIAL CONSTRUCTION DOCUMENTS.

EXTERIOR DETAILS

A9.02

SHEET SIZE: 11"x17"

PDF CREATED ON: 2/26/2023 3:26:07 PM

SHEET SIZE: 11"x17"

WINDOW SCHEDULE

MARK	ADDRESS	QTY	OPENING WIDTH	OPENING HEIGHT	MATERIAL	REPAIR	NEW	STORM WINDOWS	REPAIR CLASS	NOTES
1A	13-15 N. CENTER STREET	10	2'-10"	8'-6"	EXST. WD	Y	N	Y	3	STORMS ARE ALTERNATE #4.
1B	13-15 N. CENTER STREET	6	2'-10"	8'-6"	EXST. WD	Y	N	Y	3	PROVIDE NEW TRIM TO MATCH EXISTING TRIM AT WINDOWS 1A, PAINT.
3A	1 W. MAIN STREET	6	3'-10"	6'-6"	EXST. WD	Y	N	Y	SEE NOTE	BASE BID: MINOR REPAIR (CLASS 1). ALTERNATE #4: FULL REHABILITATION (CLASS 3).
3B	1 W. MAIN STREET and 14-16-18 N. CENTER STREET	22	4'-10"	6'-6"	EXST. WD	Y	N	Y	SEE NOTE	BASE BID: MINOR REPAIR (CLASS 1). ALTERNATE #4: FULL REHABILITATION (CLASS 3).
5	21 and 23 W. MAIN STREET	8	2'-8"	7'-8"	ALUM-CLAD	N/A	Y	N	N/A	
7	25 W. MAIN STREET	7	2'-8"	7'-1"	EXST. WD	Y	N	Y	1	REPAIR ONE WINDOW; SEE SHEET A05.07.
8	14 W. MAIN STREET	4	2'-8"	7'-2"	EXST. WD	N	N	EXIST.	N/A	PAINT ONLY.

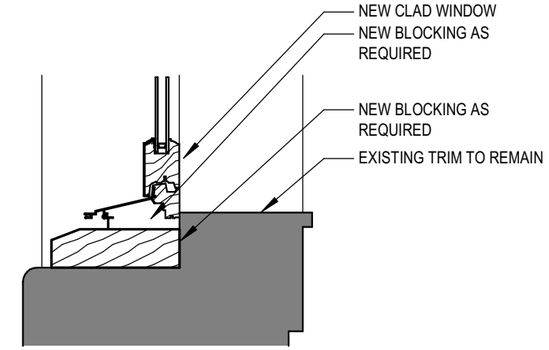

C4 **ALUMINUM CLAD WINDOW**
1 1/2" = 1'-0"

DOOR SCHEDULE

MARK	ADDRESS	DOOR WIDTH	DOOR HEIGHT	DOOR TYPE	DOOR MATERIAL	FRAME MATERIAL	TRANSOM	SIDELIGHT	REPAIR CLASS	COMMENTS
1	13-15 S. CENTER STREET			EXST	WD	WD	Y	Y	3	PROVIDE INSULATED GLAZING.
2-14	14 N. CENTER STREET	3'-4"	6'-10"	EXST	WD	WD	Y	N	2	
2-16	16 N. CENTER STREET	3'-4"	6'-10"	EXST	WD	WD	Y	N	2	
2-18	18 N. CENTER STREET	3'-4"	6'-10"	EXST	WD	WD	Y	N	2	
3A	1 W. MAIN STREET	3'--4"	7'-0"	3	ALUM	ALUM	Y	N	N/A	PROVIDE DECORATIVE FILM OVERLAY AT GLAZING.
3B	1 W. MAIN STREET	3'-6"	6'-8"	1	ALUM	ALUM	Y	N	N/A	REHAB TRANSOM.
5	21 W. MAIN STREET	3'-0"	7'-0"	EXST	WD	WD	Y	N	2	
6	23 W. MAIN STREET	3'-6"	7'-0"	3	ALUM	ALUM	Y	N	N/A	
8A	14 W. MAIN STREET	3'-0"	7'-0"	2	WD	WD	Y	Y	N/A	
8B	14 W. MAIN STREET	2'-11"	7'-0"	2	WD	WD	Y	N	N/A	

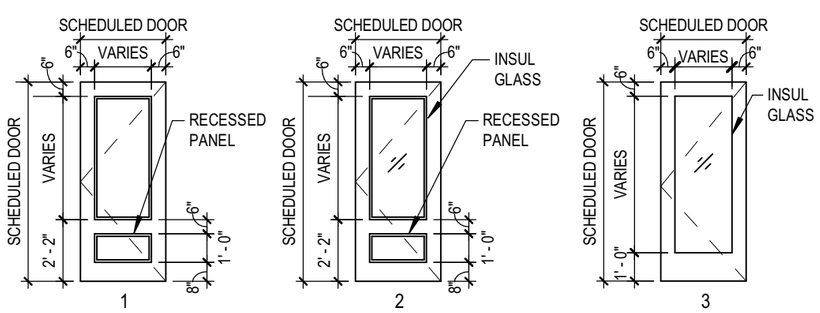

PDF CREATED ON: 2/26/2023 3:26:08 PM

CONSTRUCTION DOCUMENTS

MARSHALLTOWN FACADE REHABILITATION

RDG PLANNING • DESIGN

ARCHITECT
RDG Planning & Design
301 Grand Avenue
Des Moines, Iowa 50309-1718
Phone: 515.288.3141
www.rdgusa.com

MARSHALLTOWN
MORE THAN EVER

REV	DATE	DESCRIPTION

ISSUED: **FEBRUARY 20, 2023**

RDG PROJ. NO: **3005.009.00**

©2023 **RDG Planning & Design**

THESE DOCUMENTS HAVE BEEN PREPARED BY RDG PLANNING & DESIGN, INC. SPECIFICALLY FOR THE:

MARSHALLTOWN FACADE REHABILITATION

PROJECT. THEY ARE NOT SUITABLE FOR USE ON OTHER PROJECTS OR IN OTHER LOCATIONS WITHOUT THE EXPRESS WRITTEN APPROVAL AND PARTICIPATION OF RDG PLANNING & DESIGN, INC. REPRODUCTION IS PROHIBITED. THIS DRAWING MAY NOT REPRESENT ALL CHANGES THAT HAVE OCCURRED DURING BID OR CONSTRUCTION PHASES. CONSTRUCTION DOCUMENTS, ADDENDA, AND CHANGE DOCUMENTS REMAIN THE OFFICIAL CONSTRUCTION DOCUMENTS.

DOOR AND WINDOW SCHEDULES

A10.01

SHEET SIZE: 11"x17"

AWNING SCHEDULE

MARK	ADDRESS	QTY	AWNING DIM 'A'	AWNING DIM 'B'	AWNING DIM 'C'	AWNING DIM 'D'	VALANCE STYLE	PATTERN	MODEL NO.	TYPE	COMMENTS
1A	13-15 CENTER STREET	1	19'-8"	5'-0"	5'-0"	8"	STRAIGHT	TBD	TBD	OPERABLE, DROP ARM	PROVIDE WORDS ON SOLID COLOR VALANCE; SEE SHEET A05.01b. ALTERNATE 1.
1B	13-15 CENTER STREET	1	21'-0"	5'-0"	5'-0"	8"	STRAIGHT	TBD	TBD	OPERABLE, DROP ARM	PROVIDE WORDS ON SOLID COLOR VALANCE; SEE SHEET A05.01b. ALTERNATE 1.
1C	13-15 S. CENTER STREET	1	27'-0"	5'-0"	5'-0"	8"	STRAIGHT	TBD	TBD	OPERABLE, DROP ARM	PROVIDE WORDS ON SOLID COLOR VALANCE; SEE SHEET A05.01b. ALTERNATE 1.
2-14	14 N. CENTER STREET	1	14'-8"	5'-0"	5'-0"	6"	WAVY	TBD	TBD	OPERABLE, DROP ARM	ALTERNATE 1.
2-16	16 N. CENTER STREET	1	14'-8"	5'-0"	5'-0"	6"	WAVY	TBD	TBD	OPERABLE, DROP ARM	ALTERNATE 1.
2-18	18 N. CENTER STREET	1	16'-3"	5'-0"	5'-0"	6"	WAVY	TBD	TBD	OPERABLE, DROP ARM	ALTERNATE 1.
4	19 W. MAIN STREET	1	19'-0"	2'-0"	5'-0"	6"	STRAIGHT	COOPER BLACK	4988	OPERABLE, SELF-SUPPORTING ARM	ALTERNATE 1.
5	21 W. MAIN STREET	1	17'-0"	2'-0"	5'-0"	6"	STRAIGHT	MORELAND TAUPE	4880	OPERABLE, SELF-SUPPORTING ARM	ALTERNATE 1.
6	23 W. MAIN STREET	1	17'-0"	2'-0"	5'-0"	6"	STRAIGHT	BLACK/TAUPE FANCY	4946	OPERABLE, SELF-SUPPORTING ARM	ALTERNATE 1.

NOTES:
1. CONTRACTOR SHALL VERIFY AWNING DIMENSIONS PRIOR TO SUBMITTALS AND RE-VERIFY PRIOR TO ORDERING MATERIALS. AWNING DIMENSIONS ARE APPROXIMATE ONLY AND SHOULD BE VERIFIED ON SITE.
2. CONTRACTOR TO PROVIDE BLOCKING AS REQUIRED FOR INSTALLATION OF AWNINGS. PROVIDE FLASHING AS REQUIRED; BLOCKING TO BE PAINTED ON ALL SIDES. COLOR TO MATCH TRANSOM AREA UNLESS NOTED OTHERWISE.
3. ALL AWNING COMPONENTS SHALL BE INSTALLED AT LEAST 6'-8" ABOVE THE SIDEWALK OR FLOOR.

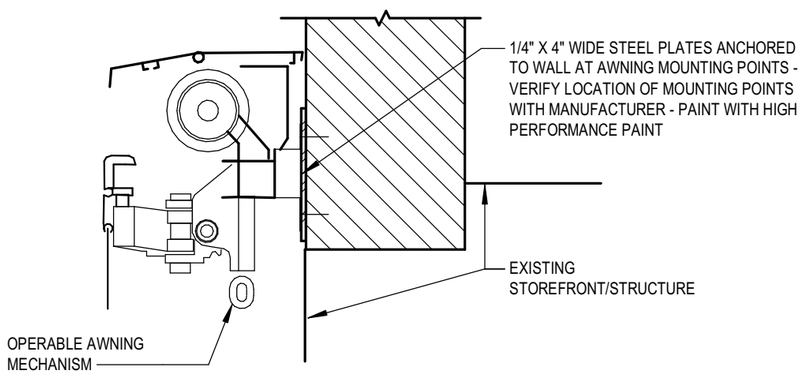

B1 STOREFRONT HEAD | SELF-SUPPORTING OPERABLE AWNING
1 1/2" = 1'-0"

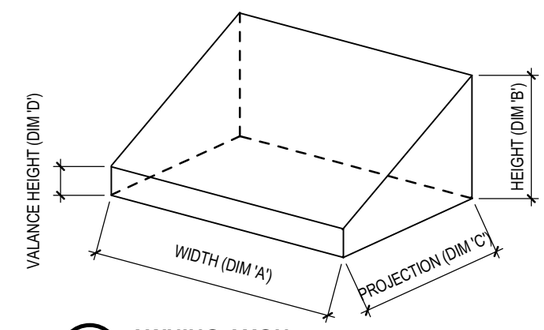

B5 AWNING AXON
1/4" = 1'-0"

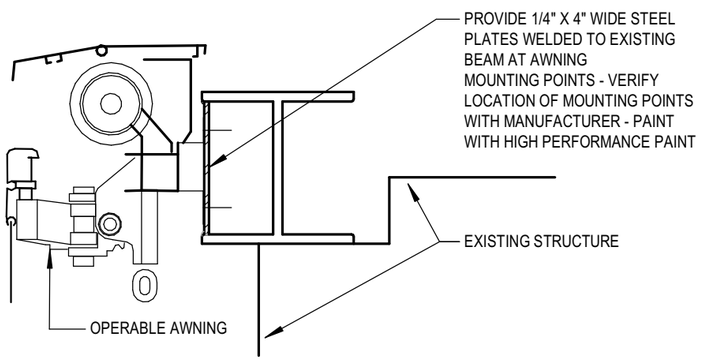

A1 STOREFRONT HEAD DETAIL W/ AWNING
1 1/2" = 1'-0"

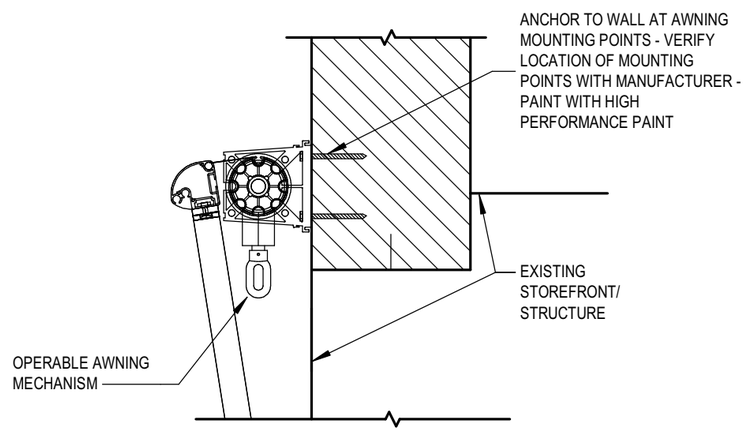

A3 STOREFRONT HEAD | DROP ARM OPERABLE AWNING
1 1/2" = 1'-0"

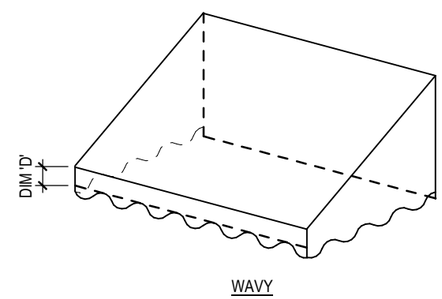

A5 VALANCE STYLE - WAVY
1/4" = 1'-0"

CONSTRUCTION DOCUMENTS

MARSHALLTOWN FACADE REHABILITATION

RDG PLANNING • DESIGN

ARCHITECT
RDG Planning & Design
301 Grand Avenue
Des Moines, Iowa 50309-1718
Phone: 515.288.3141
www.rdgusa.com

MARSHALLTOWN
MORE THAN EVER

REV	DATE	DESCRIPTION

ISSUED: **FEBRUARY 20, 2023**

RDG PROJ. NO: **3005.009.00**

©2023 **RDG Planning & Design**

THESE DOCUMENTS HAVE BEEN PREPARED BY RDG PLANNING & DESIGN, INC. SPECIFICALLY FOR THE:

MARSHALLTOWN FACADE REHABILITATION

PROJECT. THEY ARE NOT SUITABLE FOR USE ON OTHER PROJECTS OR IN OTHER LOCATIONS WITHOUT THE EXPRESS WRITTEN APPROVAL AND PARTICIPATION OF RDG PLANNING & DESIGN, INC. REPRODUCTION IS PROHIBITED. THIS DRAWING MAY NOT REPRESENT ALL CHANGES THAT HAVE OCCURRED DURING BID OR CONSTRUCTION PHASES. CONSTRUCTION DOCUMENTS, ADDENDA, AND CHANGE DOCUMENTS REMAIN THE OFFICIAL CONSTRUCTION DOCUMENTS.

AWNING SCHEDULE AND DETAILS

A10.02

PDF CREATED ON: 2/26/2023 3:26:09 PM

SHEET SIZE: 11"x17"

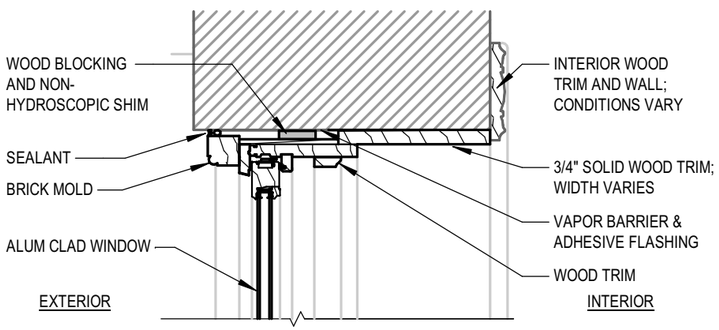

B1 WINDOW DETAIL HEAD
1 1/2" = 1'-0"

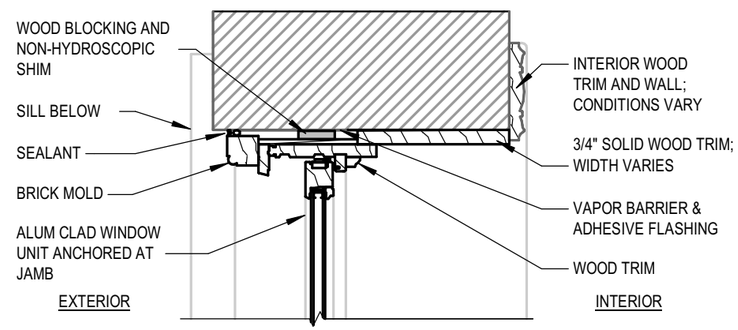

B2 WINDOW DETAIL JAMB
1 1/2" = 1'-0"

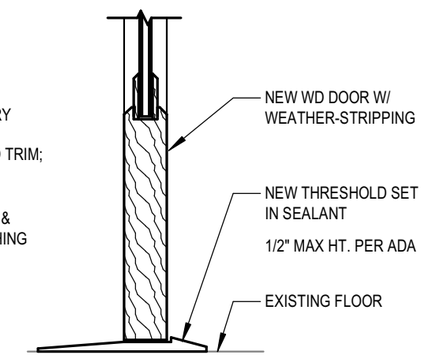

B3 WOOD DOOR THRESHOLD
1 1/2" = 1'-0"

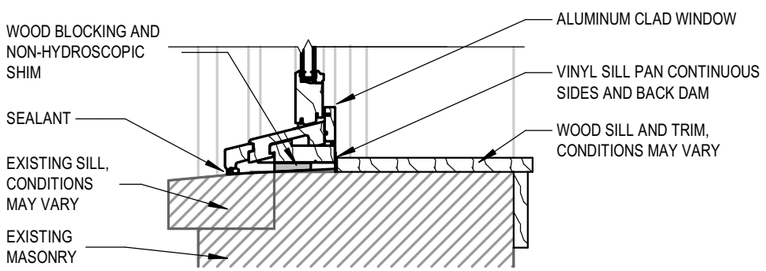

A1 WINDOW DETAIL SILL
1 1/2" = 1'-0"

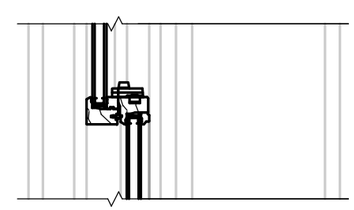

A2 WINDOW DETAIL MEETING RAIL
1 1/2" = 1'-0"

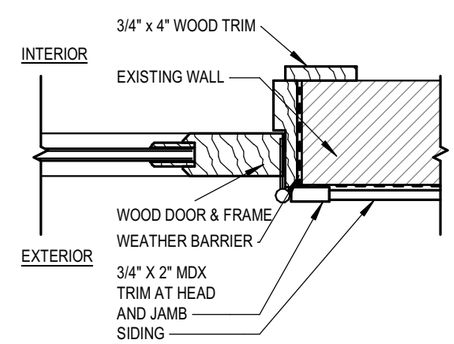

NOTE: DOOR SWING MAY VARY.

A3 WOOD DOOR JAMB DETAIL (HEAD SIM)
1 1/2" = 1'-0"

PDF CREATED ON: 2/26/2023 3:26:09 PM

CONSTRUCTION DOCUMENTS

MARSHALLTOWN FACADE REHABILITATION

RDG PLANNING • DESIGN

ARCHITECT
RDG Planning & Design
301 Grand Avenue
Des Moines, Iowa 50309-1718
Phone: 515.288.3141
www.rdgusa.com

MARSHALLTOWN
MORE THAN EVER

REV	DATE	DESCRIPTION

ISSUED: **FEBRUARY 20, 2023**

RDG PROJ. NO: **3005.009.00**

©2023 **RDG Planning & Design**

THESE DOCUMENTS HAVE BEEN PREPARED BY RDG PLANNING & DESIGN, INC. SPECIFICALLY FOR THE:

MARSHALLTOWN FACADE REHABILITATION

PROJECT. THEY ARE NOT SUITABLE FOR USE ON OTHER PROJECTS OR IN OTHER LOCATIONS WITHOUT THE EXPRESS WRITTEN APPROVAL AND PARTICIPATION OF RDG PLANNING & DESIGN, INC. REPRODUCTION IS PROHIBITED. THIS DRAWING MAY NOT REPRESENT ALL CHANGES THAT HAVE OCCURRED DURING BID OR CONSTRUCTION PHASES. CONSTRUCTION DOCUMENTS, ADDENDA, AND CHANGE DOCUMENTS REMAIN THE OFFICIAL CONSTRUCTION DOCUMENTS.

DETAILS

A10.03

STRUCTURAL REPAIRS

MARSHALLTOWN, IOWA

KEY PLAN

SCALE: N.T.S.

N

LICENSED PROFESSIONAL ENGINEER
JAMES TOMETICH
11121
IOWA

I HEREBY CERTIFY THAT THIS ENGINEERING DOCUMENT WAS PREPARED BY ME OR UNDER MY DIRECT PERSONAL SUPERVISION AND THAT I AM A DULY REGISTERED PROFESSIONAL ENGINEER UNDER THE LAWS OF THE STATE OF IOWA.
THIS NOTICE COVERS DRAWINGS S1-S4

SIGNATURE:
NAME: JAMES E. TOMETICH, P.E.
DATE: **7 July 2022** 11121

MY REGISTRATION EXPIRES ON 31-DECEMBER-2022

FOR APPROVAL

TOMETICH ENGINEERING, INC.
10501 Buena Vista Court Urbandale, IA 50322
(p) 515.280.8022 (f) 515.727.9124
http://www.tometichengineering.com

STRUCTURAL REPAIRS
AT 21 & 23 W MAIN STREET
MARSHALLTOWN, IOWA

ISSUE / REVISION

No.	Description	Date
	FOR APPROVAL	07-07-2022

DATE: 07-07-2022
FILE: U22-097-A
ENG: LJL DSN: CJA

S1

DESIGN CODES & LOADS:

THE STRUCTURAL DESIGN OF THIS PROJECT SHALL BE IN ACCORDANCE WITH THE "2018 INTERNATIONAL BUILDING CODE" (IBC), "MINIMUM DESIGN LOADS FOR BUILDINGS AND OTHER STRUCTURES" (ASCE/SEI 7-16), AND APPLICABLE REFERENCED STANDARDS. ALL LOADS REQUIRED FOR DESIGN BY OTHERS AND NOT LISTED BELOW SHALL BE IN ACCORDANCE WITH THESE REQUIREMENTS.

OCCUPANCY CATEGORY: "II"

ROOF LIVE LOADS:

GROUND SNOW	Pg = 30 psf
EXPOSURE FACTOR	Ce = 1.0
IMPORTANCE FACTOR	I = 1.0
THERMAL FACTOR	Ct = 1.0
MINIMUM ROOF SNOW LOAD	Pf = 25 psf

*DRIFTING & UNBALANCED LOADS SHALL BE IN ACCORDANCE WITH ASCE/SEI 7 CALCULATED WITH Pf AND Pg SPECIFIED

FLOOR LIVE LOADS:

RESIDENTIAL/APARTMENTS	40 psf

WIND LOADS:

ULTIMATE WIND SPEED (3 SEC GUST)	115 MPH
IMPORTANCE FACTOR	I = 1.0
EXPOSURE CATEGORY	B
INTERNAL PRESSURE COEFFICIENT	± 0.18

SEISMIC LOADS:

SITE CLASS	D
DESIGN CATEGORY	B
IMPORTANCE FACTOR	I = 1.0

CONSTRUCTION PROCEDURES & SAFETY REQUIREMENTS:

COMPLY WITH ALL APPLICABLE CITY, COUNTY, STATE, AND FEDERAL LAWS, INCLUDING THE OCCUPATIONAL SAFETY AND HEALTH ACT (OSHA) AND REGULATIONS ADOPTED PURSUANT THERETO.

THE STRUCTURAL CONTRACT DOCUMENTS REPRESENT THE FINISHED STRUCTURE. THEY DO NOT INDICATE THE MEANS AND METHODS OF CONSTRUCTION, UNLESS NOTED OR INDICATED OTHERWISE.

ENGAGE PROPERLY QUALIFIED PERSONS TO DETERMINE WHERE AND HOW TEMPORARY PRECAUTIONARY MEASURES SHALL BE USED.

PROVIDE ALL MEASURES NECESSARY TO PROTECT THE WORKERS AND ALL OTHER PERSONS DURING CONSTRUCTION. PROVIDE ALL NECESSARY MEASURES TO AVOID EXCESSIVE STRESSES AND TO HOLD THE STRUCTURAL ELEMENTS IN PLACE DURING CONSTRUCTION. SUCH MEASURES SHALL INCLUDE, BUT NOT BE LIMITED TO: BRACING, SHORING FOR CONSTRUCTION EQUIPMENT, SHORING FOR EARTH BANKS, FORMS, SCAFFOLDING, PLANKING, SAFETY NETS, SUPPORT AND BRACING FOR CRANES AND HOISTS, GUYING, ETC...

SUPERVISE AND DIRECT THE WORK SO AS TO MAINTAIN SOLE RESPONSIBILITY FOR ALL CONSTRUCTION MEANS, METHODS, TECHNIQUES, SEQUENCES, AND PROCEDURES.

OBSERVATION VISITS TO THE SITE BY STRUCTURAL ENGINEER'S FIELD REPRESENTATIVES SHALL NOT INCLUDE ABOVE NOTED ITEMS.

STRUCTURAL STEEL:

STRUCTURAL STEEL SHALL BE FABRICATED AND ERECTED ACCORDING TO AMERICAN INSTITUTE OF STEEL CONSTRUCTION'S "STEEL CONSTRUCTION MANUAL (AISC 325)" AND "SPECIFICATIONS FOR STEEL BUILDINGS (AISC 360)" UNLESS NOTED OTHERWISE.

HIGH STRENGTH BOLTING SHALL CONFORM TO RCSC "SPECIFICATION FOR STRUCTURAL JOINTS USING ASTM A325 OR A490 BOLTS", LATEST EDITION.

WELDING SHALL CONFORM TO AMERICAN WELDING SOCIETY "STRUCTURAL WELDING CODE" (AWS D1.1) CURRENT EDITION.

ALL STRUCTURAL STEEL SHALL MEET THE MATERIAL REQUIREMENTS AS SHOWN BELOW:

WIDE FLANGE SECTIONS	Fy = 50 ksi	ASTM A992
CHANNELS PLATES & ANGLES	Fy = 36 ksi	ASTM A36
STRUCTURAL PIPE	Fy = 35 ksi	ASTM A53, GRADE B
STRUCTURAL TUBE - RECTANGULAR	Fy = 46 ksi	ASTM A500, GRADE B
STRUCTURAL TUBE - ROUND	Fy = 42 ksi	ASTM A500, GRADE B
HIGH STRENGTH BOLTS		ASTM A325, TYPE 1
ANCHOR RODS	Fy = 36 ksi	ASTM F1554

ALL SHOP CONNECTIONS SHALL BE WELDED, AND FIELD CONNECTIONS SHALL BE BOLTED, UNLESS NOTED OTHERWISE.

BOLTED CONNECTIONS SHALL BE SNUG TIGHTENED JOINTS WITH BEARING TYPE THREAD CONDITIONS (TYPE N) MINIMUM SIZE OF BOLTS SHALL BE 3/4" DIAMETER, AND EACH CONNECTION SHALL HAVE MINIMUM OF 2 BOLTS, WITH ONE HARDENED WASHER PER BOLT. SHORT-SLOTTED HOLES TO ACCOUNT FOR FIELD TOLERANCE IS ACCEPTABLE, EXCEPT @ MOMENT CONNECTIONS & OTHER LOCATIONS IDENTIFIED.

WHEN STEEL BEAM CONNECTIONS ARE NOT DETAILED, PROVIDE CONNECTIONS CAPABLE OF SUPPORTING THE REACTIONS INDICATED OR 50% OF THE ALLOWABLE UNIFORM LOAD AS SHOWN IN AISC "MAXIMUM UNIFORM LOAD TABLES". REACTIONS, WHEN SHOWN, ARE SERVICE LEVEL LOADS.

UNLESS NUMBER OF BOLTS IS SPECIFICALLY CALLED OUT, DETAILS OF BOLTED CONNECTIONS ARE NOT INTENDED TO SHOW EXACT NUMBER OF BOLTS, BUT ARE INTENDED TO BE SYMBOLIC ONLY. PROVIDE NUMBER OF BOLTS TO SUPPORT REQUIRED REACTION.

ALL WELDING TO BE DONE BY AWS CERTIFIED WELDERS WITH EXPERIENCE AND CERTIFICATION IN WELDS BEING PERFORMED. ALL ELECTRODES SHALL BE E70 SERIES UNLESS NOTED OTHERWISE.

SEQUENCE WELDS TO AVOID DISTORTION OF MEMBERS. DO NOT WELD OR BOLT UNTIL MEMBER IS PROPERLY ALIGNED AND SECURED IN ITS FINAL POSITION.

WELDS NOT OTHERWISE NOTED SHALL BE 3/16" CONTINUOUS FILLET WELDS. PARTIAL AND/ OR FULL PENETRATION WELDS SHALL BE FULLY DETAILED ON SHOP DRAWINGS.

APPROVED AND DESIGNED OPENINGS IN STEEL MEMBERS SHALL BE SHOWN ON SHOP DRAWINGS. CUTTING OR BURNING HOLES IN FIELD IS NOT PERMITTED WITHOUT PRIOR WRITTEN APPROVAL OF THE STRUCTURAL ENGINEER.

PROVIDE STEEL EMBED PLATES FOR CONNECTION OF STEEL JOISTS, BEAMS, AND MISCELLANEOUS MEMBERS TO CAST-IN-PLACE CONCRETE AS DETAILED. ALL STEEL HEADED STUD ANCHORS SHALL BE IN ACCORDANCE WITH ASTM A108 & AWS D1.1.

PROVIDE BEARING PLATES FOR ALL STEEL JOISTS, BEAMS OR COLUMNS BEARING ON CONCRETE OR MASONRY WALLS. BEAR BEAMS FOR A MINIMUM OF 8" AND ANCHOR TO WALL WITH (2) 5/8" DIA. x 12" ANCHOR RODS UNLESS DETAILED OTHERWISE.

FASTEN STRUCTURAL STEEL MEMBERS TO MASONRY WITH EXPANSION ANCHORS OR ADHESIVE ANCHORS AT GROUTED CELLS AND ADHESIVE ANCHORS WITH SCREEN TUBES AT NON-GROUTED CELLS.

PROVIDE ONE COAT OF SHOP APPLIED RUST INHIBITIVE PRIMER TO ALL STRUCTURAL MEMBERS. DO NOT PAINT SURFACES TO BE GALVANIZED, FIELD WELDED, EMBEDDED IN CONCRETE OR MASONRY, CONTACT SURFACES OF FRICTION CONNECTIONS, AND SURFACES TO RECEIVE SPRAY ON FIREPROOFING.

ALL STRUCTURAL STEEL LOCATED IN EXTERIOR WALLS OR PERMANENTLY EXPOSED TO WEATHER SHALL BE HOT DIPPED GALVANIZED IN ACCORDANCE WITH ASTM A123.

WOOD FRAMING:

ALL WOOD CONSTRUCTION TO BE DONE ACCORDING TO CHAPTER 23 OF THE IBC AND NATIONAL DESIGN SPECIFICATION FOR WOOD CONSTRUCTION (NDS 2018).

WALL STUD FRAMING: PROVIDE LUMBER AND MATERIALS MEETING OR EXCEEDING THE FOLLOWING STANDARDS OF QUALITY AND MINIMUM BASE DESIGN VALUES: VISUALLY GRADED DOUGLAS FIR-LARCH OR SPRUCE-PINE-FIR NO. 2 OR BETTER.

875	psi	EXTREME FIBER STRESS IN BENDING (SINGLE): Fb
1,150	psi	COMPRESSION PARALLEL TO GRAIN: Fc
1,400,000	psi	MODULUS OF ELASTICITY: E

SAWN LUMBER HEADERS, BEAMS, AND JOISTS: PROVIDE LUMBER AND MATERIALS MEETING OR EXCEEDING THE FOLLOWING STANDARDS OF QUALITY AND MINIMUM BASE DESIGN VALUES:

VISUALLY GRADED DOUGLAS FIR-LARCH NO. 2 OR BETTER

900	psi	EXTREME FIBER STRESS IN BENDING: Fb
1,350	psi	COMPRESSION PARALLEL TO GRAIN: Fc
1,600,000	psi	MODULUS OF ELASTICITY: E

ALL HEADERS, BEAMS, AND JOISTS SHALL BE FREE FROM SPLITS, CHECKS AND SHAKES.

PRESERVATIVE PRESSURE TREATED FRAMING LUMBER: PROVIDE LUMBER AND MATERIALS MEETING OR EXCEEDING THE FOLLOWING STANDARDS OF QUALITY AND MINIMUM BASE DESIGN VALUES: VISUALLY GRADED SOUTHERN PINE NO. 2 OR BETTER:

975	psi	EXTREME FIBER STRESS IN BENDING (SINGLE): Fb
1,450	psi	COMPRESSION PARALLEL TO GRAIN: Fc
1,600,000	psi	MODULUS OF ELASTICITY: E

ALL PRESERVATIVE PRESSURE TREATED LUMBER SHALL CONFORM TO AWPA STANDARDS.

LAMINATED VENEER LUMBER (LVL) HEADERS AND BEAMS: PROVIDE LUMBER AND MATERIALS MEETING OR EXCEEDING THE FOLLOWING STANDARDS OF QUALITY AND MINIMUM BASE DESIGN VALUES:

2,600 psi	FLEXURAL STRESS: Fb
2,510 psi	COMPRESSION PARALLEL TO GRAIN: Fc
1,900,000 psi	MODULUS OF ELASTICITY: E
118,750 psi	SHEAR MODULUS OF ELASTICITY: G

ALL FASTENERS TO BE GALVANIZED IN AREAS DIRECTLY EXPOSED TO EXTERIOR ELEMENTS OR PRESERVATIVE PRESSURE TREATED MATERIAL.

ALL NAILED AND GLUED MEMBERS TO BE IN CLEAN AND DRY CONDITION PRIOR TO GLUING. ADHESIVE SHALL COMPLY WITH ANSI/AITC A190.1-1983.

PLYWOOD AND BUILT UP BEAMS TO BE IN COMPLIANCE WITH IBC STD.#25-18.

ALL WOOD FRAMING MEMBERS TO HAVE A MOISTURE CONTENT NOT TO EXCEED 19%.

ALL ROOF AND WALL SHEATHING TO BE 5/8" APA RATED UNLESS NOTED OTHERWISE.

SHEATHING ON WALLS TO HAVE STAGGERED VERTICAL JOINTS.

ALL MANUFACTURED FLOOR JOISTS SHALL BE INSTALLED ACCORDING TO MANUFACTURER'S SPECIFICATIONS AND RECOMMENDATIONS.

PROVIDE SOLID WOOD BLOCKING IN FLOOR SYSTEM WHERE CONCENTRATED LOADS OCCUR SO AS TO TRANSFER LOAD TO FRAMED WALL, BEAM, HEADER, OR FOUNDATION WALL BELOW.

NAILS AND STAPLES SHALL CONFORM TO REQUIREMENTS OF ASTM F 1667.

CONNECTIONS AND FASTENERS: NUMBER AND SIZE SHALL NOT BE LESS THAN THAT SET FORTH IN TABLE 2304.10.1 OF THE IBC

ALL LAG SCREW CONNECTIONS TO BE PRE-DRILLED.

ALL GIRDERS, BEAMS, AND HEADERS TO BE SUPPORTED BY A MIN. OF 3 STUDS (2 CRIPPLE, 1 KING)

ALL MULTI-PLY MEMBERS ARE TO BE CONNECTED TOGETHER ACCORDING TO MANUFACTURER'S SPECIFICATIONS TO ACT AS ONE SOLID MEMBER.

PREFABRICATED WOOD TRUSSES:

ALL TRUSS DESIGN TO BE DONE ACCORDING TO CHAPTER 23 OF THE IBC.

DESIGN TRUSSES UNDER THE DIRECT PERSONAL SUPERVISION OF A PROFESSIONAL ENGINEER EXPERIENCED IN DESIGN OF THIS WORK AND LICENSED IN THE STATE WHERE THE PROJECT IS LOCATED.

DESIGN TRUSSES FOR THE FOLLOWING LOADS:
TOP CHORD LIVE = 30 PSF*
TOP CHORD DEAD = 10 PSF
BOTTOM CHORD DEAD = 10 PSF
*DRIFTING & UNBALANCED LOADS SHALL BE IN ACCORDANCE WITH ASCE/SEI 7 OR AS SHOWN ON DRAWINGS.

TRUSS LAYOUT IS SCHEMATIC ONLY. TRUSS MANUFACTURER SHALL BE RESPONSIBLE FOR THE DESIGN (INCLUDING SPACING) OF ALL TRUSSES AND SHALL SUBMIT SHOP DRAWING (SEALED BY A REGISTERED ENGINEER) FOR APPROVAL BY BUILDER.

ROOF SHEATHING: APA RATED SHEATHING EXP 1, 24/0 SPAN RATING.

FLOOR SHEATHING: 3/4" T&G APA RATED FLOOR SHEATHING, 24"O.C. SPAN RATING (GLUE AND NAIL TO FLOOR FRAMING MEMBERS.)

ALL CONNECTOR PLATES SHALL BE IN COMPLIANCE WITH THE TRUSS PLATE INSTITUTE SPECIFICATION TPI-91.

DO NOT SUSPEND MECHANICAL OR ELECTRICAL ITEMS FROM LOWER CHORD OF TRUSS.

WIND CLIPS TO BE SIMPSON "H-2.5" TYPE HURRICANE CLIPS. UNLESS REQ'D OTHERWISE BY PROJECT ENGINEER OR MANUFACTURER.

PROVIDE WOOD TRUSSES ABLE TO SUSTAIN THE STATED LOADS FOR THE SPANS, PROFILES AND ARRANGEMENT SHOWN ON DRAWINGS.

FLOOR TRUSS TO BE PRESENT UNDER INTERIOR PARTITION WALLS.

SERVICEABILITY: TRUSS DEFLECTIONS SHALL NOT EXCEED THE LIMITATIONS OF SECTION 1604.3.1 OF THE IBC. UNLESS NOTED OTHERWISE ON DRAWINGS.

HISTORIC BRICK MASONRY:

MASONRY WORK SHALL BE IN ACCORDANCE WITH "BUILDING CODE REQUIREMENTS FOR MASONRY STRUCTURES" (ACI 530) AND "SPECIFICATIONS FOR MASONRY STRUCTURES" (ACI 530.1) UNLESS NOTED OTHERWISE. ALL WALLS SHALL BE BRACED IN ACCORDANCE WITH "STANDARD PRACTICE FOR BRACING WALLS UNDER CONSTRUCTION."

BRICK & MORTAR OF EXISTING STRUCTURE SHALL BE TESTED FOR BRICK TYPE, AGGREGATE SIZE, TEXTURE, GRADATION, AND COLOR TO MATCH BOTH PHYSICALLY AND VISUALLY WITH THE EXISTING BUILDING.

MATCH SIZE, TEXTURE, AND GRADATION OF EXISTING MORTAR SAND AS CLOSELY AS POSSIBLE. BLEND SEVERAL SANDS, IF NECESSARY, TO ACHIEVE SUITABLE MATCH.

MASONRY COMPONENTS SHALL CONFORM TO THE FOLLOWING:
REINFORCING BARS
ASTM 615, GR. 50
MORTAR FOR BRICK LAYING (TYPE N: APPROX. PROPORTIONS = 1 CEMENT + 1 LIME + 6 SAND, U.N.O.) ASTM C270
MORTAR FOR RE-POINTING (TYPE O: APPROX. PROPORTIONS = 1 CEMENT + 2 LIME + 9 SAND, U.N.O.) ASTM C270
LIME PUTTY WHERE REQUIRED (APPROXIMATE PROPORTIONS = 0 CEMENT + 1 LIME + 3 SAND, U.N.O.) ASTM C5
POTABLE WATER
ASTME C1602

PROVIDE CONTROL JOINTS AND EXPANSION JOINTS AS INDICATED ON ARCHITECTURAL DRAWINGS. WHERE JOINTS ARE NOT SHOWN. CONTRACTOR SHALL SUBMIT PROPOSED LOCATIONS PER ACI 530 AND 530.1 TO ARCHITECT FOR APPROVAL.

PROVIDE FLASHING, WEEPS, AND OTHER ITEMS TO BE BUILT INTEGRAL WITH THE WORK AS INDICATED ON ARCHITECTURAL DRAWINGS.

PROVIDE BRICK TIES TO ANCHOR MASONRY VENEER TO BACKUP MATERIALS AT NOT MORE THAN 16" ON CENTER EA. WAY

REFER TO LINTEL NOTES FOR CONCRETE MASONRY UNIT LINTELS AND REINFORCING.

CLEAN EXISTING BRICK FACE WITH:
PROSOCO VANATROL (OR SIMILAR), FOR SOFT AND/OR LIGHT COLORED BRICK AND MORTAR.
PROSOCO 600 (OR SIMILAR), FOR HARD AND DARK COLORED BRICK AND MORTAR.

SEAL FACE OF BRICK w/ BREATHABLE SEALANT. OPTIONS INCLUDE:

PROSOCO SILOXANE	
SHERWIN WILLIAMS HB150	
PROSOCO BREATHABLE MASONRY COATING II	ASTM D1653
SHERWIN WILLIAMS SHERLASTIC ELASTOMERIC	ASTM D1653

WATER REPELLENT SEALANTS NOT INTENDED TO BE USED IN LIEU OF WEEP HOLES/SCREENS. WEEPS STILL REQUIRED.

A TEST PANEL OF THE BUILDING IN AN INCONSPICUOUS LOCATION IS RECOMMENDED TO VERIFY APPEARANCE.

FOR APPROVAL

TOMETICH ENGINEERING, INC.
10501 Buena Vista Court Urbandale, IA 50322
(p) 515.280.8022 (f) 515.727.9124
http://www.tometichengineering.com

STRUCTURAL REPAIRS
AT 21 & 23 W MAIN STREET
MARSHALLTOWN, IOWA

ISSUE / REVISION

No.	Description	Date
	FOR APPROVAL	07-07-2022

DATE: 07-07-2022
FILE: U22-097-A
ENG: LJL DSN: CJA

S2

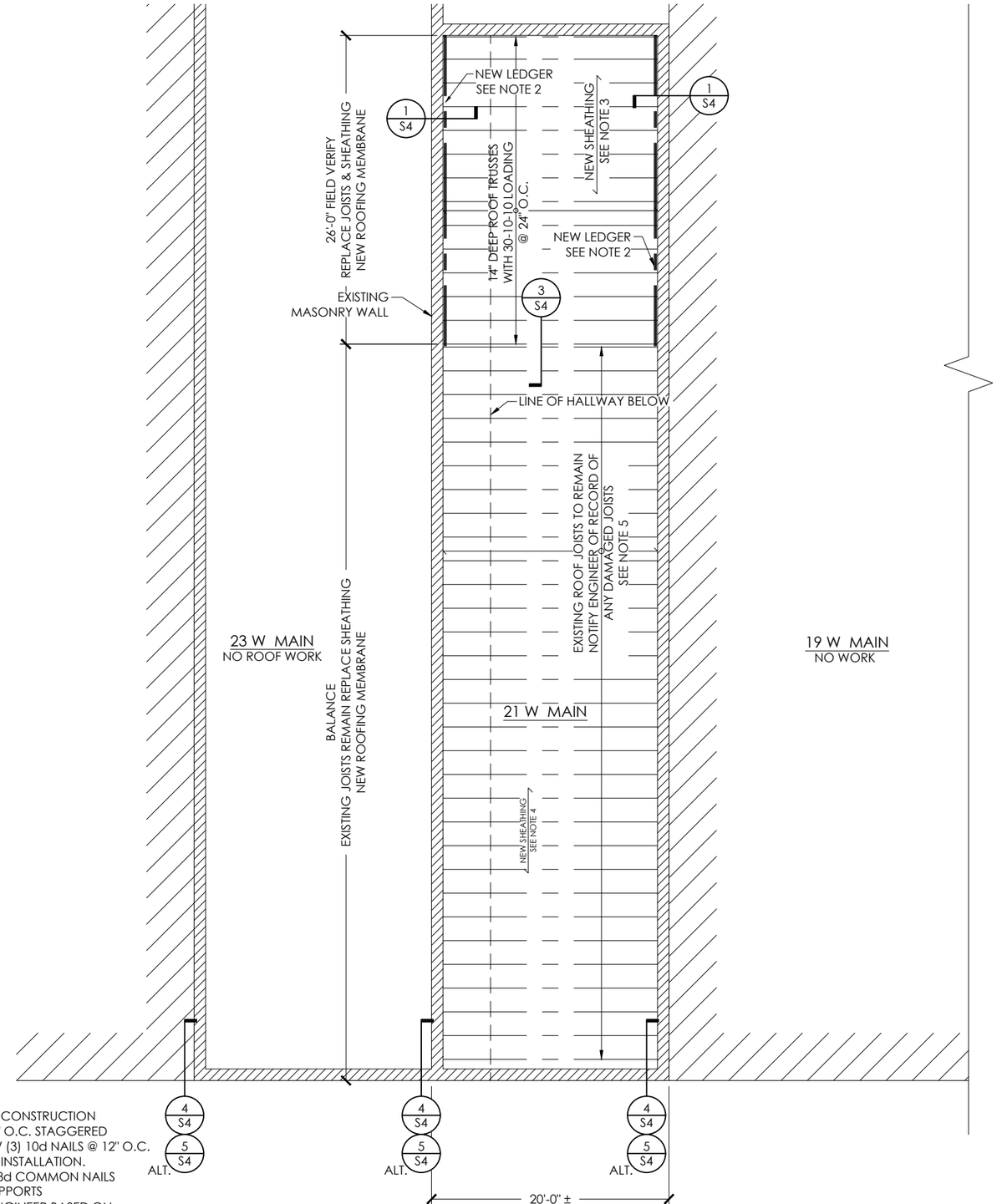

ROOF FRAMING PLAN

SCALE: 3/32" = 1'-0"

NOTES:

1. GENERAL CONTRACTOR VERIFY ALL DIMENSIONS PRIOR TO CONSTRUCTION
2. (2) 2x12 TREATED LEDGER w/ 3/4" Ø EPOXY ANCHORS @ 16" O.C. STAGGERED (HIT-HY 270 EPOXY w/ 9" EMBED). FASTEN PLYS TOGETHER w/ (3) 10d NAILS @ 12" O.C.
3. GROUT ANY VOIDS FULL THAT ARE FOUND DURING LEDGER INSTALLATION.
4. 5/8" PLYWOOD SHEATHING NAILED TO ROOF FRAMING w/ 8d COMMON NAILS 6" O.C. AT PANEL EDGES AND 12" O.C. AT INTERMEDIATE SUPPORTS
5. PRELIMINARY REPAIR PROCEDURE (TO BE CONFIRMED BY ENGINEER BASED ON OBSERVED DAMAGES): SISTER DAMAGED JOISTS w/ 1 3/4"x11 7/8" LVL FASTEN w/ (3) SDW22500 SCREWS @ 16" O.C.

FOR APPROVAL

TOMETICH ENGINEERING, INC.
10501 Buena Vista Court Urbandale, IA 50322
(p) 515.280.8022 (f) 515.727.9124
http://www.tometichengineering.com

STRUCTURAL REPAIRS
AT 21 & 23 W MAIN STREET
MARSHALLTOWN, IOWA

ISSUE / REVISION

No.	Description	Date
	FOR APPROVAL	07-07-2022

DATE: 07-07-2022
FILE: U22-097-A
ENG: LJL DSN: CJA

S3

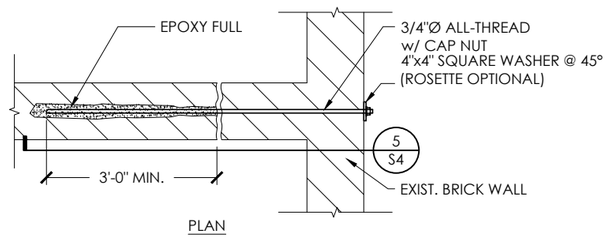

PLAN

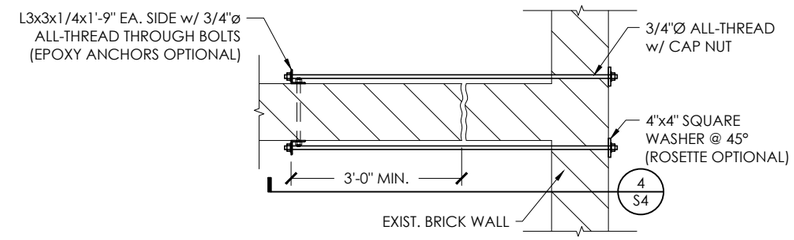

PLAN

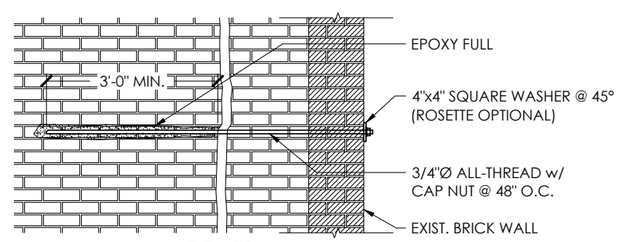

ELEVATION

MASONRY WALL STABILIZATION @ ADJOINING WALL OPTION 2 (5/S4)

SCALE: 3/8" = 1'-0"

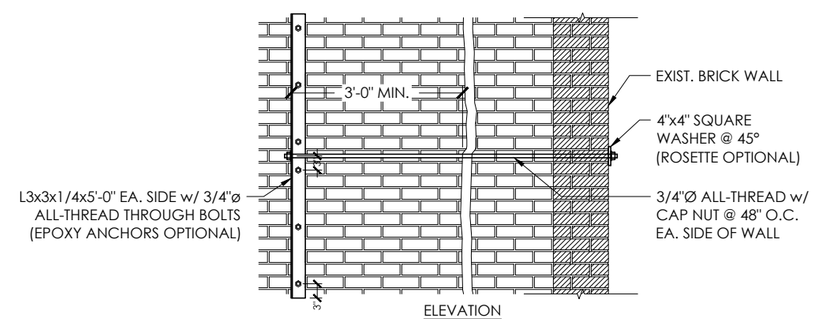

ELEVATION

MASONRY WALL STABILIZATION @ ADJOINING WALL OPTION 1 (4/S4)

SCALE: 3/8" = 1'-0"

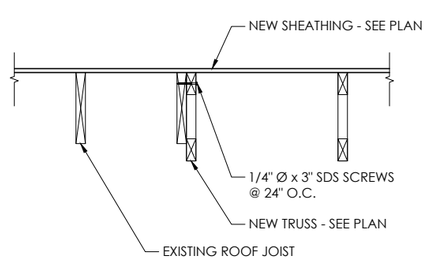

ROOF JOINT DETAIL (3/S4)

SCALE: 1/2" = 1'-0"

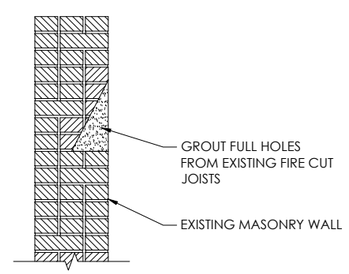

EXISTING JOIST HOLE INFILL (2/S4)

SCALE: 1/2" = 1'-0"

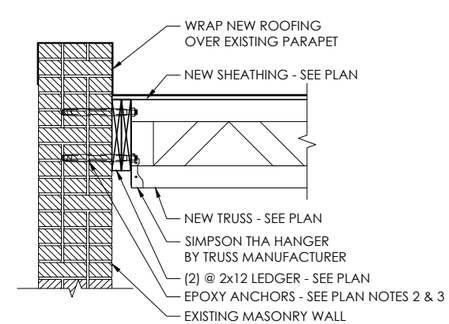

NEW TRUSS BEARING DETAIL (1/S4)

SCALE: 1/2" = 1'-0"

FOR APPROVAL

TOMETICH ENGINEERING, INC.
10501 Buena Vista Court Urbandale, IA 50322
(p) 515.280.8022 (f) 515.727.9124
http://www.tometichengineering.com

STRUCTURAL REPAIRS
AT 21 & 23 W MAIN STREET
MARSHALLTOWN, IOWA

ISSUE / REVISION

No.	Description	Date
	FOR APPROVAL	07-07-2022

DATE: 07-07-2022
FILE: U22-097-A
ENG: LJL DSN: CJA

S4

2023-068

RESOLUTION TO APPROVE THE CODE BUILDING UPGRADE GRANT APPLICATION FOR 119 E. MAIN STREET, MARSHALLTOWN, IOWA

WHEREAS, the City created a program under which grants are provided to owners or business tenants of buildings in the Urban Renewal Area No. 4 for the purpose of upgrading to City code and the Marshalltown Central Business District administers the Code Building Upgrade Grant Program; and

WHEREAS, the Downtown Incentive Grant Committee has received an application for 119 E. Main St., which is owned by K&K Preferred Properties, LLC, to be renovated into shared workspace units and a multi-function room. Code items include plumbing, electrical, sprinklers, flooring, etc.

WHEREAS, the property owners or business tenants who will make at least $5,000 in qualifying improvements for City code upgrade expenses are eligible to receive a matching grant and the grant can reimburse eligible construction costs up to 25% or up to $20,000, whichever is less; and

WHEREAS, the owner has provided an estimate of eligible reimbursements of $48,892.63 so 25% would be $12,223.16; and

WHEREAS, the Downtown Incentive Grant Committee is recommending that Council approve this grant application since the project meets the requirements, this property has not exceeded the $20,000 grant per property, and funds are available to cover this expenditure.

THEREFORE, IT IS HEREBY RESOLVED BY THE COUNCIL OF THE CITY OF MARSHALLTOWN, to approve up to $12,223.16 for the City code building upgrade grant and for the reimbursement to K&K Preferred Properties.

Passed this 10th day of April 2023, and signed this _____ day of April, 2023.

CITY OF MARSHALLTOWN, IOWA

_____

Joel T.S. Greer, Mayor

ATTEST:

_____

Alicia Hunter, City Clerk

4/5/2023

Marshalltown Central Business District
16 E Main St., Ste 280
Marshalltown, IA 50158

City Council
Marshalltown, IA

Dear Mayor and Councilors,

I am writing to submit 1 Code Grant request and 2 Façade Grant requests, on behalf of Kurt & Kristin Polley (Façade requests) and K & K Preferred Properties (Code request). The properties located at 119 E. Main St and 123 E. Main St will be renovated into shared workspace units. There will also be a multi-function room that can be used as a conference room or as an event space with access to an outdoor patio. As detailed in the specific grants, major renovations to the buildings are taking place both on the interior and exterior including sprinkling.

The Code / Façade Committee has reviewed the applications, eliminated items not covered by the programs, and approved those items as indicated for a reimbursement amount of $19,805.21.

We thank the council for taking time to review and support this project, and thank the Polley's for the substantial and beneficial improvements planned for the buildings.

Sincerely,

Doug Husak

Douglas Husak
Committee Member – MCBD

City Code - 119 E Main St	Item
Security Access Controls - provides for cell phone unlocking of doors for tenants	$3,290.00
Sprinkler Systems - thru Blackhawk Sprinklers, who have worked in Mtown prior	$12,500.00
Sound Separation between floors - not approved. ($1,467)	$0.00
Exit Doors - 1 7' x 3' x 1.75" thick metal door, 90 minute, with hardware and labor.	$1,963.15
Plumbing / Bathroom - there is no bathroom in this building at present.	$12,636.27
Electrical - Upgrade includes new service, GFCIS, Exit and Emergency lights.	$6,500.00
Sheetrock / Mudding - 5/8" in stairway for fire proofing.	$2,704.26
Floor Removal/Ramp- floor has been layered over the years is non ADA compliant,	$8,798.95
and needs a ramp between the buildings.	$500.00
	$48,892.63
	x 25%
Total Eligible Reimbursements =	**$12,223.16**

East Façade - 119 E Main St	
Creative Art - Exterior Wall, not approved. ($3,500)	$0.00
Painting - Exterior surface.	$2,800.00
Removal of debris.	$400.00
Patio / Black Iron Fencing, not approved as not part of the building. ($9,938.41)	$0.00
EIFS Installation.	$6,063.00
	$9,263.00
	x 25%
Total Eligible Reimbursements =	**$2,315.75**

South Façade - 123 E Main St - FKA Mary Katherines and Stuchy Vacuum	
Brick Cleaning & Tuckpointing.	$1,000.00
Exterior Lighting - To be added to rear of building	$3,600.00
Window/Door- Wall is delapitated. Door to be 8x8 overhead door with windows to provide light and open air when possible.	$16,465.18
Roof Replacement - not approved as program does not include roofs. ($7,950)	$0.00
Yard / Patio / Landscaping - for 20 x 30 patio, not approved. ($2,560)	$0.00
	$21,065.18
	x 25%
Total Eligible Reimbursements =	**$5,266.30**

Grand Total =	**$19,805.21**

Marshalltown Central Business District
City Code Building Upgrade Grant Application

Property Information:

Address: 119 E. Main Street

Current Tenant (Business Name): The Outlet, Co-Work+Space

Use: Commercial Zoning: Commercial

Applicant Information:

☐ For IRS purposes, please check if this is where payment is to be sent, if grant is approved.

Name of Applicant: K+K Preferred Properties, LLC

Mailing Address: 2110 S. Center St. Marshalltown IA 50158
Street City, State Zip

Phone: 641-691-7283 Fax: Cell: 641-691-7283

Owner Information (If different from applicant information):

☐ For IRS purposes, please check if this is where payment is to be sent, if grant is approved.

Legal Name of Owner: K+K Preferred Properties, LLC

Mailing Address: 2110 S. Center St. Marshalltown IA 50158
Street City, State Zip

Phone: 641-691-7283 Fax: – Cell: 641-691-7283

	Proposed use of funds City Code Expense (Check all that apply)	Est. Cost	Est. Cost
Yes	✓ Access Control/Security Cameras – Does not include cameras		$3290.00 – Amer Ale
Yes	✓ **Sprinkler Systems**		$12,500 – Blackhawk
No	✓ Sound Separation		$1467.00 – Triple E
Yes	✓ **Exit Doors**		$2263.15 – Trudoor, Mc
Yes	✓ Plumbing/Bathroom	10,400.74 + 1,540.78 + 694.75	$12,636.27 – Harden, Flo Acc
Yes	✓ Electrical		$6500.00 – Troys
Yes	✓ Fire Taping/Mudding		$2740.00 – Ameri
Yes	✓ Floor removal/Ramp	6,586.90 + 2212.05 + 500	$2298.95 – Amer Con
		Total estimated cost	$50,695.37
		Grant amount requested	$12,673.84

Note: Note: *Applicant must provide a copy of all proposed materials and design drawings for estimated scope of work and, upon completion, a copy of the contractor's waiver of lien for evidence of payment. Before reimbursement, a member of the* Main Street Downtown Incentive

Committee *must inspect that the work has been completed, as well as contractor invoices and proof of payment to contractors for work completion must be submitted. The* Main Street Downtown Incentive Committee/*City reserves the right to request additional information.*

I hereby affirm that I have full legal capacity to authorize the filing of this application and that all information and exhibits herewith submitted are true and correct to the best of my knowledge. The owner invites Main Street Downtown Incentive Committee/*City* **representatives to make all reasonable inspections, investigations and take pictures of the subject property during the processing period of this request.**

I understand that this is a voluntary program. I also understand the Main Street Downtown Incentive Committee/*City* **has the right and discretion to approve or deny any project portions thereof.**

I authorize the use of any pictures involving this project by the Main Street Downtown Incentive Committee/*City*

Signature of Applicant 3/29/23 **Date**

Signature of Owner 3/29/23 **Date**

Return to:
Marshalltown Central Business District, Debbie Millizer, Director
16 E Main St, Suite #280
Marshalltown, IA 50158
Phone: 641-844-2001 Fax: 641-844-2002
director@marshalltownmainstreet.org

Work commenced prior to Approval of the City Code Building Upgrade Application is not eligible.

Marshalltown Central Business District/City
City Code Building Upgrade Grant Application

MAIN STREET AMERICA

MAIN STREET IOWA

MARSHALLTOWN MORE THAN EVER

Scope of Work

119 E Main

CODE UPGRADE

Plumbing to code for 2 bathrooms

Sprinkler installation

Access Control/security

Electrical code upgrade

Required Fire Caulking and Taping due to 2nd story residence

Required Fire rated doors

Sound separation

Removal of excess floor build up to comply with ADA for access to exterior doors

Code

AMERICAN ALARMS

American Alarms
1659 E Euclid Avenue, Ste. B
Des Moines, IA 50313
(515) 266-9888
https://www.american-alarms.com

Presented to:
Five Star Real Estate Group
119 E Main St Marshalltown IA, 50158

Prepared by:
Travis Williams, Security Tech Manager
twilliams@american-alarms.com
515-266-9888

Please review the estimate below. We look forward to working with you.

FIVE STAR REAL ESTATE -- ACCESS CONTROL/CAMERAS SYSTEM

Thank you for trusting American Alarms with your project!

Locking + Access systems for building. Iphone based locking system, in-person and remote.

Access Control (S-1085)
Site: 119 E Main St Marshalltown IA, 50158

Subtotal:	$2,524.77 to $3,074.77; Recurring: $33.00/month
Estimated Sales Tax:	$176.73 to $215.23; Recurring: $2.32/month
Total:	**$2,701.50 to $3,290.00; Recurring: $35.32/month**

Break for alarm $ ~~2,700~~ 3,290
+ camera $ N/A

Code

BLACKHAWK
AUTOMATIC SPRINKLERS, INC.

FIRE PROTECTION CONTRACTORS • DESIGN, INSTALLATION & MAINTENANCE

P.O. BOX 998 CEDAR FALLS, IA 50613 TELEHONE: (800) 232-7721
EMPLOYEE OWNED OFFICE AT 525 EAST 18th STREET FAX: (319) 277-0000

PROPOSAL **DATE** March 29, 2023

TO: K&K Properties

RE: K&K Properties (119 E Main) 1st Flr
Marshalltown, IA
Automatic Fire Sprinklers

Att: **Kurt Polley**

BLACKHAWK AUTOMATIC SPRINKLERS, INC. (SELLER) PROPOSES TO PROVIDE &/OR INSTALL:

EQUIPMENT	QUANTITY	SIZE & DESCRIPTION
SPRINKLERS	14 23	½" Chrome Pendent ½" Bronze Upright
SYSTEM DESIGN	Exist-Wet	Light Hazard Occupancy
ALARM ACTUATING DEVICE	None	Existing.
ALARM	None	Existing.
CONTROL VALVES	None	Existing.
WATER SUPPLY	1 Lot	Connection to existing fire sprinkler piping.
FIRE DEPT. CONN.	None	As exists.
STANDARD ITEMS		Reserve Head Cabinet, Wrench, Inspectors Test, & Main Drain Piped Outside.
SPECIALS	*Note:*	***Includes local permit fee, NICET IV drawings, and figures to relocate from existing overhead piping for pendents in offices, RR's and conference rooms and uprights in the open work and break areas. Also includes adding a forward flow test connection as required per local code. Includes 1 final system test. Work to be complete by 6/1/23.***
APPROVAL BY:		Local Fire Marshal

EXCLUSIONS: Painting, Wiring, Supervisory Alarms, Special Markers, Installation Through or Above Existing Suspended Ceilings, Special Environmental Requirements, Sprinklers In Combustible Blind Spaces, Installation From Other Than Concrete Slab Floors, Underground Pipe, Holes in Ceiling Tiles or Beams, or any Overtime. **Due to the volatility & unpredictability of the steel market our price is subject to change to cover potential material increases.**

NET Price Twelve Thousand Five Hundred Dollars ---------- (T&M NTE $ 12,500.00)

Includes Freight & Transportation of Men to Site. Subject to General Terms & Conditions. **Quote good for 14 days.**

Alternate #1 N.A. Alternate #3 N.A.
Alternate #2 N.A. Alternate #4 N.A.

We Acknowledge Addendum No. None By *Jenny Kruger*

Jenny Kruger Sales/Project Manager
jkruger@blackhawksprinklers.com

Sound proofing between Floors. $1,467.00

Code

Triple E Insulators LLC.
2920 Underwood Ave.
Gilman, Ia 50106
641-478-3244 641-485-9485

Customer

Name	Five Star Real Estate Group		
Address	1015 230th St		
City	State Center	State ia	ZIP
Phone			

Qty	Description
33	Loose fill fiberglass bags
6	labor hours

Payment Select One... Ta

Comments
Name
CC # n/a
Expires

Thank you for your business! If any questions please contac
641-485-9485

TRUDOOR

INVOICE

TRUDOOR LLC
4615 W McDowell Rd #101
Phoenix, AZ 85035-4146
(844-878-3667 ext. 108) | www.trudoor.com

Date	Invoice #
3/2/2023	**80282**

Bill To	Ship To
Five Star Real Estate Group 119 East Main Street Marshalltown IA 50158 Kurt Polley (641) 691-7283	Five Star Real Estate Group 119 East Main Street Marshalltown IA 50158 Kurt Polley (641) 691-7283

Ship Via	P.O. #	Terms	Due Date	Sales Rep
LTL Freight		Prepay	3/2/2023	Kalen Reisinger (ext. 108)
Tracking # (s)				

Qty	Item Description	Each	Total
1	KD Hollow Metal Drywall Frame - 16ga. - 3'0" x 7'0" - 5-5/8" (4-5/8" Throat) - RH	$155.12	$155.12
1	90 Minute Frame Mylar Fire Label (WHI Intertek)	$7.00	$7.00
1	Regular Arm Closer Reinforcement (Frame)	$12.50	$12.50
	*** Recommended Rough Opening = 38" x 85" - Frame to Wrap Wall ***		
1	Flush Hollow Metal Door - 18ga. - 3'0" x 7'0" x 1-3/4" (Actual Size = 35-3/4" x 83-1/8") - 161 Lock Prep - Steelcraft Locations	$366.76	$366.76
1	90 Minute Door Mylar Fire Label (WHI Intertek)	$7.00	$7.00
1	Air Louvers VSL Slimline Vision Lite Kit PAK with 3/16" PYRAN® Platinum F - Clear Fire-Rated Safety Glass, CAT II Impact-Rated (180 Minute UL Labeled) - 5" x 35" - Gray (G)	$215.97	$215.97
1	Lite Kit Cutout and Installation	$60.00	$60.00
3	Trudoor BB-NRP (Non-Removable Pin) Ball Bearing Hinge - 4.5" x 4.5" - F-BLK (Flat Black)	$11.25	$33.75
1	Trudoor CL2-82 Entry Lever Lockset - Grade-2 - 2-3/4" B.S. - Sch. C Keyway - 622 (Black)	$59.74	$59.74
1	Trudoor TDC-300 Door Closer - Grade-1 (Size 1-6) - Full Cover - BLK 693 (Black)	$83.98	$83.98
3	Rubber Door Silencer - Gray	$0.10	$0.30
1	Crate Charge for LTL Freight - Back of Truck, Tailgate Delivery (Recipient Responsible for Unloading)	$95.00	$95.00

Thank You for your business!

Invoices can be paid via credit card through our secure online gateway:
https://www.trudoor.com/pay

Tax Total	$65.83
Subtotal	$1,097.12
Shipping Cost	$385.00
Total	$1,547.95
Payments	$1,547.95
Amount Due	$0.00

80282

May have had to pre-pay.

Mastercraft® 20-Minute 36"W x 80"H Primed Steel Flush Exterior Fire Door System - Left Inswing

Model Number: 4140459 | Menards ® SKU: 4140459

EVERYDAY LOW PRICE	$352.00
11% MAIL-IN REBATE Good Through 7/2/23	$38.72
FINAL PRICE	**$313.28 each**

You Save $38.72 with Mail-In Rebate

- Left inswing
- Constructed from 24-gauge steel primed white and ready to be finished with a 1-3/4" thick, energy-saving, insulating foam core
- Prehung with a 6-9/16", primed, 20-minute fire-rated frame
- Aluminum no-rot sill with adjustable inswing, 2 spring-loaded hinges, and 1 standard satin nickel hinge
- Prebored with a 2-3/4" backset for easy handle installation and double bored and prepped for deadbolt (handleset and deadbolt sold separately)

View More Information >

Nominal Size: 36" W x 80" H

Door Swing: Left Hand

Frame Width: 6-9/16"

Ship To Store - Free!

Available for Special Order at
MARSHALLTOWN
Get it as soon as 04/05/2023

Shipping & Delivery

Available

Local Utility Rebates

Up to $105 in Local Utility Rebates

Rebate information provided by EcoRebates

This is Required by Fire Marshall.

Labor to Install 1 hr x $80.00 = $415.20

Hardon's
114 West 4th St.
Tama, IA 52339
+1 6414843222
marty@hardonservices.com
www.hardonservices.com

Code

BILL TO
Kurt Polley
119 E Main St
Marshalltown, IA 50158

ESTIMATE MH900112322A

DATE 11/23/2022

JOB NAME
ESTIMATE -Rough in plumbing

DESCRIPTION	QTY	RATE	AMOUNT
Install two bathrooms and plumbing for code update.			
Stack			
4" PVC cleanout tee (test tee)	3	51.00	153.00T
4" PVC MIP cleanout plug	3	7.11	21.33T
4" PVC wye	2	49.98	99.96T
4" x 2" PVC wye	2	15.88	31.76T
4" x 3" PVC wye	1	18.39	18.39T
3" PVC wye	1	31.98	31.98T
3" PVC cleanout tee (test tee)	2	30.60	61.20T
2" Cleanout test plug	2	5.52	11.04T
3" PVC street 45 elbow	1	6.03	6.03T
3" PVC street 90 elbow	1	16.98	16.98T
4" PVC street 45 elbow	2	13.02	26.04T
4" PVC 45 elbow	2	11.42	22.84T
4" x 2" PVC tee	1	18.57	18.57T
4" PVC pipe (ft)	20	8.92	178.40T
3" PVC pipe (ft)	10	8.30	83.00T
SEWER			
4" PVC long sweep 90 elbow	1	37.58	37.58T
4" PVC street 90 elbow	1	15.82	15.82T
4" PVC 45 elbow	1	21.98	21.98T
4" PVC street 45 elbow	1	23.98	23.98T
4" PVC wye	1	21.29	21.29T
Replacement closet flange	2	8.69	17.38T
3" x 2" PVC wye	1	12.64	12.64T
3" Flex coupling	1	7.46	7.46T
2" PVC 45 elbow	3	3.20	9.60T
2" PVC street 45 elbow	3	4.78	14.34T

Code

DESCRIPTION	QTY	RATE	AMOUNT
2" PVC street 90 elbow	1	6.98	6.98T
2" PVC wye	2	5.06	10.12T
2" PVC tee	3	6.15	18.45T
2" PVC 90 elbow	5	2.50	12.50T
2" PVC long sweep 90 elbow	3	7.56	22.68T
2" PVC p-trap	2	8.99	17.98T
2" x 1 1/2" PVC double sanitary tee	1	4.85	4.85T
2" x 2" x 1 1/2" PVC tee	1	3.43	3.43T
2" x 1 1/2" x 1 1/2" PVC tee	1	4.29	4.29T
2" PVC 22.5 elbow	2	3.26	6.52T
2" J-hook	4	8.38	33.52T
2" PVC cap	2	16.58	33.16T
1 1/2" PVC cap	2	2.09	4.18T
4" J-hook	4	12.58	50.32T
Galvanized hanger strap (10ft)	1	2.82	2.82T
3/8" Threaded rod (ft)	8	1.26	10.08T
3/8" Wall Plate/Ceiling Plate	2	1.69	3.38T
3/8" nut	4	1.69	6.76T
2" x 3/8" tear drop hanger	2	2.43	4.86T
1 1/2" PVC 90 elbow	2	1.28	2.56T
2" PVC pipe (ft)	70	5.18	362.60T
1 1/2" PVC pipe (ft)	10	3.46	34.60T
3" PVC cap	1	21.98	21.98T
4" x 3" PVC reducing coupling	1	23.98	23.98T
4" PVC coupling	1	5.67	5.67T
2 x 10 PVC Pipe	5	35.12	175.60T
3/4" x 5' PVC pipe	1	8.98	8.98T
3/4" PVC 90 elbow	2	1.34	2.68T
1 1/2" x 3/4" flush bushing	1	3.14	3.14T
3/4" PVC coupling	1	0.59	0.59T
Waterlines			
1/2" Wirsbo plug	8	1.99	15.92T
1/2" Wirsbo blue ring	35	0.42	14.70T
1/2" Wirsbo 90 elbow	5	2.82	14.10T
Strong arm with 2 plastic pex bends	3	13.65	40.95T
3/4" x 3/4" x 1/2" Wirsbo tee	7	5.60	39.20T
3/4" x 1/2" x 1/2" Wirsbo tee	5	6.36	31.80T
3/4" Wirsbo 90 elbow	7	3.59	25.13T
3/4" Wirsbo blue ring	32	0.60	19.20T
1/2" Sharkbite coupling	2	11.88	23.76T
3/4" Sharkbite coupling	3	13.78	41.34T
3/4" Wirsbo ball valve	1	30.54	30.54T
1/2" Sharkbite ball valve	1	24.20	24.20T
3/4" Sharkbite ball valve	1	35.84	35.84T
3/4" Pro press drop 90 elbow	2	42.96	85.92T
3/4" Pro press 45 elbow	1	5.80	5.80T
3/4" Pro press FIP adapter	2	11.58	23.16T
3/4" Pro press MIP adapter	1	10.19	10.19T
3/4" MIP x 3/4" Pro press	1	7.35	7.35T
3/4" Wirsbo x 1/2" Wirsbo reducing coupling	1	4.70	4.70T
3/4" L Hard Copper (ft)	4	9.45	37.80T

Code

DESCRIPTION	QTY	RATE	AMOUNT
3/4" Wirsbo or Pex pipe (ft) blue or red	65	1.68	109.20T
1/2" Wirsbo or Pex pipe (ft) blue or red	45	0.92	41.40T
3/4" Half clamp	30	0.22	6.60T
1/2" Half clamp	30	0.21	6.30T
Trip/vehicle Charge Marshalltown	1	25.00	25.00
Fuel Surcharge	1	5.00	5.00T
Labor	1	7,135.00	7,135.00T

Thank you for working with us!

SUBTOTAL	9,721.95
TAX (7%)	678.79
TOTAL	10,400.74
TOTAL DUE	$10,400.74

Code

Vanity X 2 For Main level bathrooms = $1,540.78

Studio design COLLECTION

AURORA 37 IN. VANITY WITH CARRARA MARBLE TOP

West Des Moines's everyday low price!

$719.99 / piece

SKU 100821479

View Specifications

Size: 37in.

Quantity of pieces

1 $719.99 / piece

FEEDBACK

SUBTOTAL **$719.99**

Klarna. Pay as low as $60/mo. Learn more

IN-STORE PICKUP

West Des Moines - 4 pieces

Check Other Stores

HOME DELIVERY

FREE In-Store Returns Learn More

ADD TO CART

Add To My Projects Print Copy Link

MATERIALS YOU NEED FROM START TO FINISH

Code

Estimate

Troy's Electric LLC
Box 400
Le Grand, IA 50142 US
641-751-0160
troyselectric1@gmail.com

ADDRESS
Five star FIVE STAR REALITY

ESTIMATE #	DATE
1035	03/27/2023

SERVICE	DESCRIPTION	QTY	RATE	AMOUNT
	This the electrical code upgrade at 119 E Main St. includes updating new service,adding GFCIS,adding exit and emegency lights.			
material	updated new service,added GFCI,added exit and emergency lights			6,500.00

SUBTOTAL	6,500.00
TAX	0.00
TOTAL	**$6,500.00**

Accepted By

Accepted Date

INVOICE

Ameri-Construction
641.844.8581
Anything roof and under. Give us a call, we do it all!

AMERI-CONSTRUCTION
P.O. Box 311
Albion, IA 50005

americonstruction2017@gmail.com
641-844-8581

Kurt Polley

Bill to
Kurt Polley
119 East Main st.
Marshalltown, IA 50158

Ship to
Kurt Polley
119 East Main st.
Marshalltown, IA 50158

Invoice details
Invoice no.: 53
Invoice date: 03/12/2023
Terms: Net 30
Due date: 04/11/2023

	Product or service		Amount
1.	**22 Specialty** Install 5\8 sheetrock on stairway wall for fire proofing	3 units × $80.00	$240.00
2.	**17 Insulation** Insulation	17 hrs × $80.00	$1,360.00
3.	**Materials**	1 unit × $1,104.26	$1,104.26
		Total	**$2,704.26**

Code

Ameri-construction

P.O. Box 311
IA 50005

Phone # 6418448581 americonstruction2017@gmail.com

1/1/2023	46

Kurt Polley
119 East Main st.
Marshalltown, IA 50158

Description	Qty	Rate	Amount
Remove false ceiling, Remove all interior walls, Remove 3 layers of flooring and haul all debris to landfill landfill	72	80.00	5,760.00
		826.90	826.90
			$6,586.90

Not currently ADA compliant if additional level of flooring was added.

Demo for Main Hall

Junk Relief

Code

Junk Removal Services

Jacob Rowley • Owner
910 E. South St. • Marshalltown, IA 50158
641-750-9581

Customer Order No:	Phone:	Date:

Name: Kurt Paley

Address: Main St

Qty.	Description	Amount
	Labor hours 57	$1,425.00
	- 11/29/22 5 hrs.	
	- 11/30/22 16 hrs. 2 guys	
	- 12/01/22 8 hrs 3 guys	
	- 12/02/22 8 hrs 2 guys	
2	Dumpster Rental	$175.00
1	Disposal Fee	$150.15
1	Disposal Fee	$60.30
1	Disposal Fee	$275.00
	Tax:	
	Total:	$2,212.95

Received By:

Thank You!!

Removal of flooring to lower to ADA code.
3 layers to be removed.

Code

INVOICE

Ameri-Construction
641.844.8581
Anything roof and under Give us a call, we do it all!

AMERI-CONSTRUCTION
P.O. Box 311
Albion, IA 50005

americonstruction2017@gmail.com
641-844-8581

Kurt Polley

Bill to
Kurt Polley
123 East Main st.
Marshalltown, IA 50158

Ship to
Kurt Polley
123 East Main st.
Marshalltown, IA 50158

Invoice details
Invoice no.: 54
Invoice date: 03/29/2023
Terms: Net 30
Due date: 04/28/2023

Product or service		Amount
1. **06 Floor Frame**	1 unit × $500.00	$500.00
Build a ramp on 119 east main floor to allow transition to 123 east main due to different heights in floor. Price will be materials and labor		
	Total	**$500.00**

MCBD - Main Street Program, Façade and Code Grants - since inception

F=Façade
C=Code

Year	B=Both	Address	Owner	Grant Amt	Total Investment
2006	F	36 E Main St	Those Ink Guys	5,003.00	$20,015
2007	F	219 E Main St	Bob's Furniture	7,110.00	$30,325
2007	F	117 W Main St	Mike's Bikes	7,395.00	$31,927
2008	F	118 W Main St	Headliner	5,743.00	$22,973
2010	F	107 N Center St	Showroom Auto	21,698.00	$179,528
2010	F	118 E Main St	Peglow Law	8,500.00	$49,545
2010	B	101 W Main St	Devaul Inc	14,994.00	$105,000
2010	F	5 W Main St	Ocean City	16,693.00	$91,243
2011	B	4 E Main St	Zamora Market	2,688.50	$50,000
2012	B	5 W Boone St	Don Anderson	13,121.50	$160,609
2013	B	134 E Main St	Common Bond	45,500.00	$8,000,000
2013	B	119 E Main St	Kester	20,000.00	$160,000
2014	F	105 W Main St	McGregor - Antique	12,500.00	$180,000
2015	B	125-131 E Main St	Hagstrand - Kibbey (Downtowı	50,972.50	$282,776
2015	C	208 E Church St	Aaron Benscoster	20,000.00	$490,000
2015	F	16 E Main St	CGA	5,740.00	$22,960
2015	F	119 E Main St	Kester	5,445.70	$24,053
2015	F	207 E Church St	Stufflebeam Plaza	2,583.75	$29,622
2017	B	116 W Main St; Optical Center	Schossow	8,500.00	$38,650
2019	F	216-218 E. Main St.	Hawkins & Urbanowski	2,539.50	$10,158
2019	F	14 E. Main: Northwestern	CGA Properties	8,371.75	$33,487
2019	F	17 N. 1st St.	Avalos	8,500.00	$35,303
2019	F	19-21 S. 2nd Ave	Hagstrand	8,368.68	$33,475
2019	F	30 E Main (Façade)	Miller	5,500.73	$22,003
2019-328	F	128 E. Main Street (Façade)	CKROBIN: Craig Robinson	1,821.16	$7,285
2019-336	F	116 W Main St; Optical Center (East wall)	Schossow	12,500.00	$84,240
2020-065	C	207 E. Main St. (Code upgrade)	Grey: Dave's Bar	3,819.50	$15,278
2020-160	F	102 E. State Street	Big 8 Tyre	4,869.82	$19,479
2020-172	F	207 E. Main St. (Facade upgrade)	Grey: Dave's Bar	3,873.40	$15,494
2020-190	F	32 E. Main/8 N 1st St	Bplus Properties (SportsPlus &	8,558.75	$34,235
2020-195	C	201 E. Main Street (Code upgrade)	M'town Senior Living Residenc	20,000.00	$103,580
2020-195	F	201 E. Main Street (Facade)	M'town Senior Living Residenc	21,408.50	$121,484
2020-239	F	4 E. Main Street (Façade)	Zamora's Fresh Market	12,500.00	$102,356
2020-274	F	14-16 E. Main St (Façade)	Matt Garber (NW Mutual & CC	4,250.00	$17,000
2020-275	C	13 N. 1st Street (Code upgrade)	Gabriella Vagas Avalos	16,569.01	$66,276
2020-279	F	120 E. Main Street (Façade)	Sonia Morceigo (7 Rayos Liquc	3,009.38	$12,250
2020-316	F	118 W. Main St. (Façade)	Marla Grabenbauer (Headliner	1,712.44	$7,560
2020-317	C	210 E. Main St. (Code upgrade)	Deim Holdings LLC	19,642.54	$78,470
2021-164	C	4 E. Main Street (Code)	Zamora's Fresh Market	17,746.75	$70,987
2021-218	C	207 E. Main St. (Code upgrade 2nd story)	REM Homes LLC	2,845.00	$11,380
2021-254	F	202 E. Church St. (Façade)	REM Homes LLC	15,190.91	$60,764
2021-335	F	34 W. Main (Façade)	Hopkins Property LLC	21,000.00	$305,310
2021-336	C	34 W. Main (Code)	Hopkins Property LLC	19,492.50	$77,970
2021-337	F	36 W. Main (Façade)	Willard Property LLC	38,000.00	$388,608
2021-338	C	36 W. Main (Code)	Willard Property LLC	20,000.00	$116,955
2022-059	F	26 E. Main (Façade)	Simms Construction LLC	12,500.00	$71,181
2022-060	C	26 E. Main (Code)	Simms Construction LLC	20,000.00	$131,150
2022-242	F	119 E. Main West & North sides (Façade)	K&K Preferred Properties	21,000.00	$93,393
		SUB-TOTAL		**629,778.27**	**12,116,336.97**
COUNCIL REALLOCATED TO MCBD FOR OPERATIONS DUE TO TORNADO FY19				40,000.00	
		TOTAL COMMITTED		**669,778.27**	

CERTIFIED FUNDS	**390,000.00**
9-28-19 Council approved additional funding for FY20 from TIF Cash on Hand	**20,000.00**
9-28-19 Council approved additional funding for FY21 $40,000	**40,000.00**
7-13-20 Council approved additional funding for FY21 $80,000	**80,000.00**
11-23-20 Council approved for FY22 (Res 2020-323) $40,000	**40,000.00**
11-22-21 Council approved additional funding for FY22 with cash on hand $80.000-7,000-3873.4	**73,000.00**
11-22-21 Council approved funding for FY23 (Res 2021-341) $50,000	**50,000.00**
BALANCE REMAINING before April 10, 2023 applications presented	**23,221.73**

2023-069

RESOLUTION TO APPROVE THE FAÇADE GRANT APPLICATION FOR 119 E. MAIN STREET, MARSHALLTOWN, IOWA

WHEREAS, the City created a program under which grants are provided to owners or business tenants of buildings in the Urban Renewal Area No. 4 for the purpose of improving building facades (the "Façade Improvement Program") and the Marshalltown Central Business District administers the Façade Improvement Program; and

WHEREAS, the Downtown Incentive Grant Committee has received an application for east side of 119 E. Main St., which is owned by K&K Preferred Properties, to paint the exterior, remove debris, and install EIFS; and

WHEREAS, the property owner(s) or business tenant(s) who will make at least $5,000 in qualifying improvements are eligible to receive a matching grant and the grant can reimburse eligible construction costs up to 25% or up to $8,500 for a 1 story structure or $12,500 if it also relates to upper story improvements, whichever is less; and

WHEREAS, the owner has provided an estimate of eligible construction costs of $9,263.00 so 25% would be $2,315.75; and

WHEREAS, the Downtown Incentive Grant Committee is recommending that Council approve this grant application since the project meets the requirements and funds certified for the façade grant are available to cover this expenditure.

THEREFORE, IT IS HEREBY RESOLVED BY THE COUNCIL OF THE CITY OF MARSHALLTOWN, to approve the grant up to $2,315.75 for the reimbursement to K&K Preferred Properties for the facade improvement at 119 E. Main Street.

Passed this 10th day of April 2023, and signed this _____ day of April 2023.

CITY OF MARSHALLTOWN, IOWA

_____
Joel T.S. Greer, Mayor

ATTEST:

_____
Alicia Hunter, City Clerk

4/5/2023

Marshalltown Central Business District
16 E Main St., Ste 280
Marshalltown, IA 50158

City Council
Marshalltown, IA

Dear Mayor and Councilors,

I am writing to submit 1 Code Grant request and 2 Façade Grant requests, on behalf of Kurt & Kristin Polley (Façade requests) and K & K Preferred Properties (Code request). The properties located at 119 E. Main St and 123 E. Main St will be renovated into shared workspace units. There will also be a multi-function room that can be used as a conference room or as an event space with access to an outdoor patio. As detailed in the specific grants, major renovations to the buildings are taking place both on the interior and exterior including sprinkling.

The Code / Façade Committee has reviewed the applications, eliminated items not covered by the programs, and approved those items as indicated for a reimbursement amount of $19,805.21.

We thank the council for taking time to review and support this project, and thank the Polley's for the substantial and beneficial improvements planned for the buildings.

Sincerely,

Doug Husak

Douglas Husak
Committee Member – MCBD

City Code - 119 E Main St	Item
Security Access Controls - provides for cell phone unlocking of doors for tenants	$3,290.00
Sprinkler Systems - thru Blackhawk Sprinklers, who have worked in Mtown prior	$12,500.00
Sound Separation between floors - not approved. ($1,467)	$0.00
Exit Doors - 1 7' x 3' x 1.75" thick metal door, 90 minute, with hardware and labor.	$1,963.15
Plumbing / Bathroom - there is no bathroom in this building at present.	$12,636.27
Electrical - Upgrade includes new service, GFCIS, Exit and Emergency lights.	$6,500.00
Sheetrock / Mudding - 5/8" in stairway for fire proofing.	$2,704.26
Floor Removal/Ramp- floor has been layered over the years is non ADA compliant,	$8,798.95
and needs a ramp between the buildings.	$500.00
	$48,892.63
	x 25%
Total Eligible Reimbursements =	**$12,223.16**

East Façade - 119 E Main St	
Creative Art - Exterior Wall, not approved. ($3,500)	$0.00
Painting - Exterior surface.	$2,800.00
Removal of debris.	$400.00
Patio / Black Iron Fencing, not approved as not part of the building. ($9,938.41)	$0.00
EIFS Installation.	$6,063.00
	$9,263.00
	x 25%
Total Eligible Reimbursements =	**$2,315.75**

South Façade - 123 E Main St - FKA Mary Katherines and Stuchy Vacuum	
Brick Cleaning & Tuckpointing.	$1,000.00
Exterior Lighting - To be added to rear of building	$3,600.00
Window/Door- Wall is delapitated. Door to be 8x8 overhead door with windows to provide light and open air when possible.	$16,465.18
Roof Replacement - not approved as program does not include roofs. ($7,950)	$0.00
Yard / Patio / Landscaping - for 20 x 30 patio, not approved. ($2,560)	$0.00
	$21,065.18
	x 25%
Total Eligible Reimbursements =	**$5,266.30**

Grand Total =	**$19,805.21**

(East)

Marshalltown Central Business District
Façade Grant Application

Property Information:

Address: 119 E. Main Street

Current Tenant (Business Name): The Outlet, Co-Work + Space

Use: Commercial Zoning: Commercial

Applicant Information:

Name of Applicant: Kurt + Kristin Polley

Mailing Address: 119 E. Main St., Apt B Marshalltown IA 50158

Street City, State Zip

Phone: 641-691-7283 Fax: — Cell: —

Owner Information (If different from applicant information):

Name of Applicant: Same As Above

Mailing Address:

Street City, State Zip

Phone: Fax: Cell:

	Proposed use of funds (Check all that apply)	Est. Cost	
No	X Creative Art	$3500.00	Messy Missy
	___ Awning with façade project	$	
	___ Brick cleaning and tuckpointing	$	
	X Custom Painting Exterior	$	
Yes	X Painting of exterior surface	$2800.00	Mrgs painting
	___ Preservation of architectural elements	$	
Yes	X Removal of inappropriate elements	$400.00	
	___ Signage	$	
	___ Storefront rehabilitation/restoration	$	
	___ Window and/or door repair	$	
No	X Other; explain Patio/Fence	$9938.41	Petty Vinyl + Vogelar
Yes	X Eifs installation	$6063.00	Accent
	Total estimated cost	$22701.41	
	Grant amount requested	$5,675.35	9,263 × 25% = 2,315.75
	Low Interest Loan amount requested	$	
	(Low Interest Loan Available with Participating Banks – See overview)		

Note: *Applicant must provide a copy of all proposed materials and design drawings for estimated scope of work and, upon completion, a copy of the contractor's waiver of lien*

for evidence of payment. The Main Street Downtown Incentive Committee/*City reserves the right to request additional information.*

I hereby affirm that I have full legal capacity to authorize the filing of this application and that all information and exhibits herewith submitted are true and correct to the best of my knowledge. The owner invites MCBD representatives to make all reasonable inspections, investigations and take pictures of the subject property during the processing period of this request.

I understand that this is a voluntary program. I also understand the Main Street Downtown Incentive Committee/*City* **has the right and discretion to approve or deny any project portions thereof.**

I authorize the use of any pictures involving this project by the Main Street Downtown Incentive Committee/*City*

3-23-23

Signature of Applicant **Date**

3-23-23

Signature of Owner **Date**

Return to:
Marshalltown CBD, Jenny Etter, Executive Director
16 E Main St Suite 280
Marshalltown, IA 50158
Phone: 641-844-2001 Fax: 641-844-2002
director@marshalltownmainstreet.org

Work commenced prior to approval of the Façade Grant Application is not eligible.

Scope of Work

119 E Main Street (EAST)

Eifs Installation

Paint

Removal of siding

Addition of Patio/fenced space

ESTIMATE

Art - East

messy missy's
artsy·fartsy·stuff!

Statement of Work

Contact Name: Kristin Polley
Project: Building Mural @ 119 East Main St., Marshalltown IA
Date: 3-29-23

Fees:

Design/painting Time	50 hour @ $48/hr	$2496.00
Editing/finishing Time	4 hour @ $28/hr	$112.00
Supplies		
Materials & Prep Work		$800.00
Other		
Misc Supplies		$92.00
SUBTOTAL		$3500.00
TAX		N/A
TOTAL ESTIMATE		**$3500.00**
Deposit Due Upon Receipt		***$500.00***

Thank you!

Remit to: Messy Missy's, 2925 Price Way, Laurel, IA. 50141

Gmail mrgspainting@yahoo.com

East

15

Compose

Mail

Inbox 15

Chat

Starred

Snoozed

Spaces

Important

Sent

Meet

Drafts 40

Categories

More

Labels

[Gmail]Trash 5

2110 S Center street 1

Clients

Hospice of the Midwest

Insurance Rentals and Fi...

K&K Preferred Prop... 1

Orton Homes

House Plans 2

Plat Maps

Mike Garrett

Powerwash

Prep
cover windows, cement, doors

Paint
Black outline then cover then paint white

Labor, lift and materials 3500

Bid 2

upper top, walls, garage, door and back side walls

Prep
cover cement doors etc
sand and degloss doors

Paint (2 coats)

Labor and materials 2800

$2800

visible from parking lot
&
Church St.

PETTY VINYL

Company, Inc.
1203 Hwy. 96 •Gladbrook, IA 50635
641-751-0959 •888-477-4474 •Fax 641-473-3113

East

May 9, 2022

Kurt and Kristin Polley
Uptown Office
Marshalltown, IA 50158

Estimate

98' 3-Rail 72", 1230 Style Aluminum Fence
Pickets ¾" x ¾"

13 6' Sections	$155.08	$2,016.04
4 4' Section	$113.71	$454.84
1 4' Gate/Hinge/Latch	$409.60	$409.60
17 2 ½ x 8' Posts (.090" wall)	$59.23	$1,006.91
2 . 2 ½ x 9' Post (.125" wall)	$94.17	$188.34
19 2 ½" Flat Top	$3.56	$67.64
		$4,143.37
12' Cedar Fence 84" tall	$50/ft.	$600.00
Instllation/Concrete		$900.00
	Sub-total	$5,643.37
	Tax	$395.04
	Total	**$6,038.41**

Gmail
Search in mail
14
Mail
Chat
Spaces
Meet
Compose
Inbox 14
Starred
Snoozed
Important
Sent
Drafts 40
Categories
More
Labels
[Gmail]Trash 5
2110 S Center street 1
Clients
Hospice of the Midwest
Insurance Rentals and Fi...
K&K Preferred Prop... 1
Orton Homes
House Plans 2
Plat Maps

East

to Kurt@fivestarhometeam.com

Vogeler Construction **Quote**

Date: 3/22/2023

Kurt Polley

Project costing sheet for Patio 123 E Main

Job Descriptioin 20'x30'x4" thick patio

Grade area

Pack grade

Form slab

Rebar 2' on centers

Pour concrete 4 inch thick

Broom concrete finish

Total Job **$3,900.00**

Accent Drywall & Plastering LLC

1504 South 5th St.
Marshalltown, IA 50158

Estimate

Date	Estimate No.
10/07/21	1417

Business Phone & Fax:
641-752-3544

Cell Phone:
641-751-6850

Name/Address
Kurt PollyProperties

Project:
Main st

Back of Garage East
Front of Garage. West

Description	Total
Materials and Labor (job your main st house) Garage walls for EIFS (East and west walls) will use 1 ½ inch foam then new base and finish. Based on you taking off siding. If you want to take off additional cost. $6,063 East $2,000 West **Prices valid for 30 days.**	8,063.00
Total	$8,063.00

If you have any questions, please contact me. Thank you.

Signature: _____

Dan Anderson

2023-070

RESOLUTION TO APPROVE THE FAÇADE GRANT APPLICATION FOR 123 E. MAIN STREET, MARSHALLTOWN, IOWA

WHEREAS, the City created a program under which grants are provided to owners or business tenants of buildings in the Urban Renewal Area No. 4 for the purpose of improving building facades (the "Façade Improvement Program") and the Marshalltown Central Business District administers the Façade Improvement Program; and

WHEREAS, the Downtown Incentive Grant Committee has received an application for the south side of 123 E. Main St., which is owned by K&K Preferred Properties, LLC, to replace window/door, brick cleaning and tuckpointing, and exterior lighting; and

WHEREAS, the property owner(s) or business tenant(s) who will make at least $5,000 in qualifying improvements are eligible to receive a matching grant and the grant can reimburse eligible construction costs up to 25% or up to $8,500 for a 1 story structure or $12,500 if it also relates to upper story improvements, whichever is less; and

WHEREAS, the owner has provided an estimate of eligible construction costs of $21,065.18 so 25% would be $5,266.30; and

WHEREAS, the Downtown Incentive Grant Committee is recommending that Council approve this grant application since the project meets the requirements and funds certified for the façade grant are available to cover this expenditure.

THEREFORE, IT IS HEREBY RESOLVED BY THE COUNCIL OF THE CITY OF MARSHALLTOWN, to approve the grant up to $5,266.30 for the reimbursement to K&K Preferred Properties for the facade improvement at 123 E. Main Street.

Passed this 10th day of April 2023, and signed this _____ day of April 2023.

CITY OF MARSHALLTOWN, IOWA

_____

Joel T.S. Greer, Mayor

ATTEST:

_____

Alicia Hunter, City Clerk

4/5/2023

Marshalltown Central Business District
16 E Main St., Ste 280
Marshalltown, IA 50158

City Council
Marshalltown, IA

Dear Mayor and Councilors,

I am writing to submit 1 Code Grant request and 2 Façade Grant requests, on behalf of Kurt & Kristin Polley (Façade requests) and K & K Preferred Properties (Code request). The properties located at 119 E. Main St and 123 E. Main St will be renovated into shared workspace units. There will also be a multi-function room that can be used as a conference room or as an event space with access to an outdoor patio. As detailed in the specific grants, major renovations to the buildings are taking place both on the interior and exterior including sprinkling.

The Code / Façade Committee has reviewed the applications, eliminated items not covered by the programs, and approved those items as indicated for a reimbursement amount of $19,805.21.

We thank the council for taking time to review and support this project, and thank the Polley's for the substantial and beneficial improvements planned for the buildings.

Sincerely,

Doug Husak

Douglas Husak
Committee Member – MCBD

City Code - 119 E Main St	Item
Security Access Controls - provides for cell phone unlocking of doors for tenants	$3,290.00
Sprinkler Systems - thru Blackhawk Sprinklers, who have worked in Mtown prior	$12,500.00
Sound Separation between floors - not approved. ($1,467)	$0.00
Exit Doors - 1 7' x 3' x 1.75" thick metal door, 90 minute, with hardware and labor.	$1,963.15
Plumbing / Bathroom - there is no bathroom in this building at present.	$12,636.27
Electrical - Upgrade includes new service, GFCIS, Exit and Emergency lights.	$6,500.00
Sheetrock / Mudding - 5/8" in stairway for fire proofing.	$2,704.26
Floor Removal/Ramp- floor has been layered over the years is non ADA compliant,	$8,798.95
and needs a ramp between the buildings.	$500.00
	$48,892.63
	x 25%
Total Eligible Reimbursements =	**$12,223.16**

East Façade - 119 E Main St	
Creative Art - Exterior Wall, not approved. ($3,500)	$0.00
Painting - Exterior surface.	$2,800.00
Removal of debris.	$400.00
Patio / Black Iron Fencing, not approved as not part of the building. ($9,938.41)	$0.00
EIFS Installation.	$6,063.00
	$9,263.00
	x 25%
Total Eligible Reimbursements =	**$2,315.75**

South Façade - 123 E Main St - FKA Mary Katherines and Stuchy Vacuum	
Brick Cleaning & Tuckpointing.	$1,000.00
Exterior Lighting - To be added to rear of building	$3,600.00
Window/Door- Wall is delapitated. Door to be 8x8 overhead door with windows to provide light and open air when possible.	$16,465.18
Roof Replacement - not approved as program does not include roofs. ($7,950)	$0.00
Yard / Patio / Landscaping - for 20 x 30 patio, not approved. ($2,560)	$0.00
	$21,065.18
	x 25%
Total Eligible Reimbursements =	**$5,266.30**

Grand Total =	**$19,805.21**

(South)

Marshalltown Central Business District
Façade Grant Application

Property Information:

Address: 123 E. Main Street (FKA Mary Katherines)

Current Tenant (Business Name): The Outlet, Co-Work + Space

Use: Commercial Zoning: Commercial

Applicant Information:

Name of Applicant: Kurt + Kristin Polley

Mailing Address: 119 E. Main St., Apt B, Marshalltown IA 50158
Street City, State Zip

Phone: 641-691-7283 Fax: – Cell: –

Owner Information (If different from applicant information):

Name of Applicant: same as above

Mailing Address:
Street City, State Zip

Phone: Fax: Cell:

	Proposed use of funds (Check all that apply)	Est. Cost	
	___ Awning	$	
	___ Awning with façade project	$	
Yes	X Brick cleaning and tuckpointing	$ 1000.00	Stalzer Maso
Yes	X Exterior lighting	$ 3600.00	Troy's
	___ Painting of exterior surface	$	
	___ Preservation of architectural elements	$	
	___ Removal of inappropriate elements	$	
	___ Signage	$	
	___ Storefront rehabilitation/restoration	$	
Yes	X Window and/or door repair 3645.18 + 5,700 + 6,400 = 15,745.18	$ 16,465.18	Marshall Glass, Dan's, Amer
No	X Other; explain Roof Replacement	$ 7,950.00	Iowa Roof
No	X Yard/landscape	2560.00	Conscience
	Total estimated cost	$ 31,575.18	
	Grant amount requested	$ 7893.80	
	Low Interest Loan amount requested	$ –	

(Low Interest Loan Available with Participating Banks – See overview)

Note: *Applicant must provide a copy of all proposed materials and design drawings for estimated scope of work and, upon completion, a copy of the contractor's waiver of lien*

for evidence of payment. The Main Street Downtown Incentive Committee/ *City reserves the right to request additional information.*

I hereby affirm that I have full legal capacity to authorize the filing of this application and that all information and exhibits herewith submitted are true and correct to the best of my knowledge. The owner invites MCBD representatives to make all reasonable inspections, investigations and take pictures of the subject property during the processing period of this request.

I understand that this is a voluntary program. I also understand the Main Street Downtown Incentive Committee/*City* **has the right and discretion to approve or deny any project portions thereof.**

I authorize the use of any pictures involving this project by the Main Street Downtown Incentive Committee/*City*

Signature of Applicant 3-28-23 **Date**

Signature of Owner 3-23-23 **Date**

Return to:
Marshalltown CBD, Jenny Etter, Executive Director
16 E Main St Suite 280
Marshalltown, IA 50158
Phone: 641-844-2001 Fax: 641-844-2002
director@marshalltownmainstreet.org

Work commenced prior to approval of the Façade Grant Application is not eligible.

Scope of Work

123 E Main Street (SOUTH)

Brick Repair

New Windows

New Doors

New Landscape

Roof

Electrical

Stalzer's Masonry

All Work Guaranteed

2304 Wakefield Drive - Marshalltown, IA 50158

Ph: (641) 351-3506

South

Date 5-1-22

Proposal Submitted To	Work To Be Performed At
Name Kurt Polley	Street 123 E Main St
Street	City Milton State
City Marshalltown	Date of Plans —
State Ia	Architect —
Telephone Number 641-691-7223	

We hereby propose to furnish all the materials and perform all the labor necessary for the completion of

Coat to tuckpoint South side of building

All material is guaranteed to be as specified, and the above work to be performed in accordance with the drawings and specifications submitted for above work and completed in a substantial workmanlike manner for the sum of

with payments to be made as follows: 1/2 down balance on completion Dollars ($1000.00)

Any alterations or deviation from above specifications involving extra costs, will be executed only upon written orders, and will become an extra charge over and above the estimate. All agreements contingent upon strikes, accidents or delays beyond our control. Owner to carry fire, tornado and other necessary insurance upon above work. Workmen's Compensation and Public Liability Insurance on above work to be taken out by

Respectfully submitted Dennis Stalzer

Per Stalzer's Masonry

Note — This proposal may be withdrawn by us if not accepted within days.

ACCEPTANCE OF PROPOSAL

The above prices, specifications and conditions are satisfactory and are hereby accepted. You are authorized to do the work as specified. Payments will be made as outlined above.

Accepted Yes or No. Please Circle Signature

Date Signature

White - Customer's Copy Yellow - File Copy

Troy's Electric LLC
Box 400
Le Grand, IA 50142 US
641-751-0160
troyselectric1@gmail.com

South

Estimate

ADDRESS
Five star
FIVE STAR REALITY

SHIP TO
Five star
FIVE STAR REALITY

ESTIMATE #	DATE
1034	03/27/2023

SERVICE	DESCRIPTION	QTY	RATE	AMOUNT
	This estimate is for adding 4 outlets and 2 lights on the back patio of building 123			
material	material			1,300.00
labor	labor			2,300.00

SUBTOTAL	3,600.00
TAX	0.00
TOTAL	**$3,600.00**

20 x 30 patio
to be laid w black
iron fence (Petty Vinyl)

Accepted By

Accepted Date

Sout

Copy 1

MARSHALL GLASS
10 N THIRD AVE
Marshalltown, IA 50158

PH:641-752-3381 FAX:(641) 752-2808

Federal Tax ID: 84-1936647

P/O#:

Taken By:
Installer:
SalesRep:

Cust State Tax ID:
Cust Fed Tax ID:
Ship Via:

Adv. Code:

Quote: Q010900
Date: 3/20/2023
Time: 09:44 AM

Bill To: Walkin

Sold To: Walkin

Kurt Polley
123 E. Main st
MARSHALLTOWN, IA 50158

Back Door - 3/20/2023

(641) 691-7283

Qty	Part Number	Description	Disc%	Sell	Total
1	COM	Commercial Glazing Bronze Door	0	$2,566.71	$2,566.71
1	LA	Labor	0	$840.00	$840.00

THANK YOU FOR YOUR BUSINESS.

Bronze Out-swing Door
Narrow Stile
10" Bottom Rail
Closer/Sweep
RIM exit hardware
Electric Strike
Butt Hinges

1" Low-E Tempered IG

To Be Installed Into Customers Prepared Opening

window/door

Sub Total: $3,406.71

Tax: $238.47

Total: $3,645.18

South

Dan's
OVERHEAD DOORS & MORE

Dustin Bernacki, Vice President
1810 Dan's Drive NW * North Liberty, Iowa 52317
319-626-3667 *319-626-3070 Fax *319-631-2009 Cell
E-mail: dustin@dansdoors.com

March 17, 2023

Five Star Home Team
123 E Main St
Marshalltown, IA 50158

Back.

We propose to furnish and install in properly framed and finished opening:

One (1) 8x8' RAYNOR model AP138C insulated steel door. Door sections shall be of steel-polyurethane-steel sandwich type construction to include a thermal break and have an 'R' insulating value of 13. The exterior and interior skin shall be of structural quality, hot-dipped galvanized steel with baked-on epoxy primer and painted BLACK acrylic finish coat. Factory standard paint is included in this proposal. Each panel in the door will have two (2) 42"x16" insulated windows.

Weather seals will be factory installed joint seals between sections, a top seal on the top section to seal against the header, jamb and header seals and an astragal on the bottom section. Track will be hot-dipped, galvanized 2" reverse angle mount with track setting to allow slight compression to top and end seals. Track shall have high lift. All hinges and brackets shall be made from hot-dipped, galvanized steel. Track rollers shall be case-hardened inner steel races with 10-ball bearings. Torsion springs will be wound from oil-tempered wire; 10,000 cycle rated.

One (1) LIFTMASTER model 8500W, side mount operator, 110 volt, 1 phase operator that features:

Note: *Effective August 29th 2010, all commercial door operators are required to have monitored photo sensors or safety edges to meet UL 325 requirements.

Electrical wiring, both primary and secondary, by others.

REMOTES- $ 60.00 each

MATERIAL AND LABOR, SUM OF: . . . . . .$ 5,700.00

window/door

ACCEPTED FOR SELLER:
Dustin Bernacki
Vice President

MADE IN USA

WE ACCEPT THE ABOVE PROPOSAL:

Print Name

Signature Date

meeting room on other side of door (8x8).

8 x 8 door is for light and reception.

Continued on next page. . .

South

ESTIMATE

AMERI-CONSTRUCTION
P.O. Box 311
Albion, IA 50005

americonstruction2017@gmail.com
641-844-8581

Ameri-Construction
641.844.8581
Anything roof and und ... Give us a call, we do it all!

Kurt Polley

Bill to	Ship to	Estimate details
Kurt Polley 123 East Main st. Marshalltown, IA 50158	Kurt Polley 123 East Main st. Marshalltown, IA 50158	Estimate no.: 1002 Estimate date: 03/22/2023

	Product or service		Amount
1.	**18 Interior Walls** Fix floor in South West corner. Build 14' walls on 4 sides in back part of building 40' X 20' with storage and bathroom. All materials supplied by owner.	48 hrs x $80.00	$3,840.00
2.	**11 Siding** Remove siding down to bare. Repair all rotten wood caused by leak will be extra time and materials. Frame in and install 2 windows and cover up existing door. Apply house rap and apply siding supplied by owner.	32 hrs x $80.00	$2,560.00

South.

Total $6,400.00

$1,000 Framing Materials For South Wall.

Window/door

South

Prepared For

Kurt Polley
2110 S Center St.
Marshalltown, Iowa

Iowa Roof Coatings

1832 110th St
Kalona, Iowa 52247
Phone: (319) 330-3850
Email: iowaroofcoatings@gmail.com
Web: Facebook..IowaRoofCoatings

Estimate # 1001
Date 03/10/2023

Description	Rate	Quantity	Total
Kevlar Reniforced Ply Systems Attn: Kurt	$7,950.00	1	$7,950.00

For roof at above address.
1. Roof will be thoroughly washed and cleaned.
2. Military Grade Spunflex Mesh (3 foot wide rolls) will be unrolled into Rapid Roof base coat Coatings, then will have another layer of base coat sprayed and back rolled on top of the Spunflex Mesh.
3. When the base coat is dry, a layer of White Rapid Roof III Top Coat will be applied over the entire area.
This system will be White in color and Seamless.
This roof will have a FIFTEEN YEAR LABOR and MATERIALS WARRANTY.
Bid includes all labor and materials for a price of $7,950.00.

123 E Main St.

South

Subtotal	$7,950.00
Total	**$7,950.00**

Hello
Home & Kitchen Search Amazon

South

Amazon Home | Shop by Room | Discover | Shop by Style | Home Décor | Furniture | Kitchen & Dining | Bed & Bath | Garden & Outdoor | Home Improvement

Be ready to say thanks for the moment
Shop now at gift.google.com

Patio, Lawn & Garden › Outdoor Décor › Outdoor Rugs

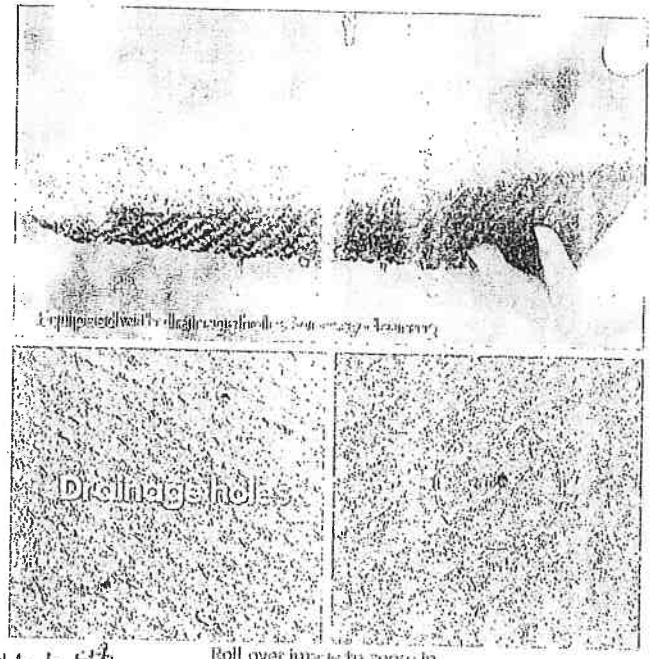

Roll over image to zoom in

23 E Main St
South

8 Rolls = $1,280
Labor = $1,280
$2,560

Conscience Trading Artificial Grass 5 FT x 13 FT (65 Square ft) Synthetic Thick Lawn Astro Turf Carpet Perfect for Indoor/Outdoor Fake Grass Rug (5FTx13FT (65 Square ft))

Visit the Conscience Trading Store
322 ratings

$159.99

FREE Returns

Save more Apply 5% coupon Terms

Get $50 off instantly: Pay $109.99 upon approval for the Amazon Rewards Visa Card.

Size: 5 x 13 Feet

3 x 8 Feet	3.3 x 5 Feet
4 x 7 Feet	4 x 13 Feet
5 x 8 Feet	5 x 10 Feet
5 x 13 Feet	6 x 8 Feet
6.5 x 5.5 Feet	6.5 x 10 Feet
7 x 13 Feet	

Plant or Animal Product Type	Grass
Indoor/Outdoor Usage	Outdoor, Indoor
Brand	Conscience Trading
Material Feature	Natural
Expected Blooming Period	Year Round
Unit Count	1 Count
Care Instructions	Water

About this item

$159.99

FREE Returns

FREE delivery Wednesday, March 29

Or fastest delivery Tuesday, March 28. Order within 19 hrs 37 mins

Select delivery location

In Stock

Qty: 1

Add to Cart

Buy Now

Secure transaction

Ships from	Amazon
Sold by	Conscience Trading INC

Return policy: Eligible for Return, Refund or Replacement within 30 days of receipt

Enjoy fast, FREE delivery, exclusive deals and award-winning movies & TV shows with Prime

Try Prime and start saving today with Fast, FREE Delivery

Add a gift receipt for easy returns

Add to List

New (2) from
$159.99 & FREE Shipping.

Other Sellers on Amazon

$ 69.00 Add to Cart
& FREE Shipping
Sold by: Conscience Trading INC

Have one to sell?
Sell on Amazon

2023-071

RESOLUTION TO AMEND THE STORM WATER UTILITY RATE CREDIT POLICY FOR THE CITY OF MARSHALLTOWN

WHEREAS, the City of Marshalltown, Iowa Storm Water Utility Rate Credit Policy establishes the types, amounts, and application requirements of rate credits available for customers to apply for in relation to their storm water utility rate; and

WHEREAS, the updated policy now includes a Level 6 Discharge Credit; and

WHEREAS the council finds that adopting this policy amendment is in the best interest of the City of Marshalltown, Iowa.

THEREFORE, IT IS HEREBY RESOLVED BY THE CITY COUNCIL OF THE CITY OF MARSHALLTOWN, IOWA: to adopt the revised Storm Water Utility Rate Credit Policy for the City of Marshalltown.

Passed this 10th day of April 2023, and signed this _____ day of April 2023.

CITY OF MARSHALLTOWN, IOWA

_____

Joel Greer, Mayor

ATTEST:

_____

Alicia Hunter, City Clerk

MARSHALLTOWN
IOWA

Joel Greer, Mayor
Jessica Kinser, City Administrator
24 North Center Street
Marshalltown, IA 50158
PH 641.754.5701 | FX 641.754.5717

TO: Mayor Greer and City Council
FROM: Heather Thomas, Public Works Director
DATE: April 10, 2023
RE: Amendment to Policy – Storm Water Utility Rate Credit

Strategic Plan:

☐ Strategy 1: Expand and improve development in the community.
☐ Strategy 2: Enhance Marshalltown's public image.
☒ Strategy 3: Continually improve and sustain the City's infrastructure, organization, and services.
☐ Strategy 4: Partner with citizens, for-profit, non-profit, and others to improve quality of life.

Plan Objective:
Review City policies, procedures, plans, ordinances, programs, and services for updates and efficiencies.

Recommendation:
Approval of the proposed amendment to the City's policy.

Budget Impact:
Minimal reduction in current storm water utility fees for those that apply and are approved.

Description/Background:
In April of 2013, City Council adopted a policy to provide an opportunity for customers to apply for a storm water utility rate credit. The amendment proposed is to provide one additional option for a customer to apply for and receive a partial discharge credit to lower their storm water utility rate.

This option, which we have designated Level 6, would allow for a property that discharges a portion of the storm water generated through impervious spaces on their property directly outside city limits without re-entering city limits to essentially able split their property so that only the area draining to the city's storm water infrastructure be used in the computation of the storm water utility rate. Storm water infrastructure includes storm sewer, inlets, box culverts, pipe culverts, and open drainage ways including creeks, rivers, gutter flow, and road ditches.

This policy amendment is being proposed based on continued communication with a property owner & customer that would be impacted and eligible under the Level 6 designation.

i:\public works\council items\2023\storm water credit policy\memo - storm water credit policy - 23 04 06.docx

CITY COUNCIL
Al Hoop, Gabriel Isom, Barry Kell, Mike Ladehoff,
Jeff Schneider, Gary Thompson, Dex Walker

POLICY
STORM WATER UTILITY RATE CREDIT

Adopted April 22, 2013 (Resolution 2013-077)
Amended April 10, 2023 (Resolution 2023-###)

MARSHALLTOWN
MORE THAN EVER

INTRODUCTION & HISTORY

The City Council of the City of Marshalltown (City), Iowa amended the Code of Ordinance of the City of Marshalltown, Iowa, 2003 by modifying Article IV. Storm Water. The purpose of the amendment was to modify the storm water rate charged to all developed properties in the City as well as the fee in lieu of detention. The storm water rate provides revenue to fund operation and maintenance of storm water infrastructure, storm water utility capital projects, and to meet storm water permit requirements.

Storm water rates are in proportion to the demand that each customer's property places on the storm water drainage system. The amount of impervious area on developed properties increases the amount of storm water runoff to the storm water drainage system and is the major contributing factor in water pollution and erosion. Impervious area has a direct and proportional relationship to the estimated amount of water that leaves a property as storm water runoff. Assessment of the storm water rate is based on the impervious area on each property.

The City of Marshalltown has established a credit program through which a customer is eligible to reduce their monthly storm water rate.

The 2013 adopted policy outlines 5 different credit levels that a customer can apply for a full or partial credit to reduce their monthly storm water rate. The 2023 amendment provides for one additional credit level (Level 6) that a customer can apply for.

ELIGIBILITY

Residential:

A residential customer may be eligible for a storm water utility rate ~~Direct~~ Discharge Credit (Level 5 or Level 6) when the following condition applies:

1. All storm water or a portion of the storm water generated from impervious areas of the~~from~~ developed property discharges directly to unincorporated areas.~~.~~

Non - Residential:

A non-residential customer may be eligible for a storm water utility ~~Rate~~ Reduction Credit (Levels 1-4) when the following conditions apply:

1. The customer constructs and maintains private storm water detention or retention facilities onsite that effectively reduce surface water runoff from that parcel to any City storm water collection or conveyance facility.
2. The private storm water or retention facility meets the credit criteria described in this policy.
3. *Please note - properties draining to public storm water detention or retention facilities are not eligible for a storm water utility rate credit.*

A non-residential customer may be eligible for a storm water utility rate ~~Direct~~ Discharge Credit (Level 5 or Level 6) when the following condition applies:

1. All storm water or a portion of the storm water generated from impervious areas of the~~from~~ developed property discharges directly to unincorporated areas.~~.~~

CREDIT CRITERIA

~~Rate/Volume~~ Reduction Credits

Storm water runoff ~~Rate~~ Reduction Credits are available to non-residential customers that restrict the peak discharge from a developed site through onsite storm water facilities, such as detention and retention ponds that are privately designed, constructed, and maintained to City standards and requirements. Property owners of private storm water detention or retention facilities may, at their option, apply for the ~~Rate~~ Reduction Credits described below.

1. Level 1 Credit (Rate Reduction Credit) – 25% Credit

   Currently, the City of Marshalltown requires new developments to provide storm water detention as specified by Iowa Statewide Urban Design and Specifications (SUDAS) criteria. Storm water facilities qualify for the Level 1 Credit if the facility meets the SUDAS criteria stating that the post-development peak storm water runoff rate from the developed site for the 100-year frequency storm shall not exceed the pre-development peak storm water runoff rate for the 5-year frequency storm.

   Existing and new properties that meet this criterion are eligible to receive a 25% credit.

2. Level 2 Credit (Additional Rate Reduction Credit) – 20% Credit

   Storm water facilities that qualify for the Level 1 Credit can also qualify for the Level 2 Credit if the facility further reduces the post-development peak storm water runoff rate for the 100-year design storm by at least 20% below the pre-development peak storm water runoff rate for the 5-year frequency storm.

   Existing and new properties that meet both Level 1 Credit and Level 2 Credit criteria are eligible to receive an additional 20% credit.

3. Level 3 Credit (Additional Volume Credit) – 20% Credit

   Storm water facilities that qualify for the Level 1 Rate Reduction Credit can also qualify for the Level 3 Credit if the facility provides 20% more storage volume than required for the 100-year frequency storm.

   Existing and new properties that meet both Level 1 Credit and Level 3 Credit criteria are eligible to receive an additional 20% credit.

4. Level 4 Credit (Alternative Rate Reduction Credit) – 10% Credit

   Recognizing that many privately-maintained storm water facilities were designed and constructed before the current SUDAS criteria, the City of Marshalltown offers a partial credit. Storm water facilities can qualify for the Level 4 Credit if post-development peak storm water runoff rate from the developed site for the 50-year frequency storm does not exceed the pre-development peak storm water runoff rate from the 5-year frequency storm.

   Existing properties with storm water facilities that meet Level 4 Credit criterion but do not qualify for the Level 1 Credit are eligible to receive a 10% credit.

A customer can receive all of Level 1, 2, and 3 Credits for a total of 65% credit if the private storm water facility qualifies. A customer can, alternately, qualify for Level 4 Credit for a 10% credit.

Formatted: Indent: Left: 0"

~~Direct~~ Discharge Credits

Storm water ~~Direct~~ Discharge Credits are available to residential or non-residential customers that discharge their storm water directly to unincorporated areas. ~~Property owners with no storm water quantity impact on the City's storm water infrastructure for this reason may, at their option, apply for the direct discharge credit described below.~~

5. Level 5 Credit (Direct Discharge Credit) - 100% credit

   ~~Property owner~~Customers can qualify for this credit if their property is contiguous to and discharges ~~all~~ ALL storm water from the property directly to unincorporated areas. All storm water would be required to have no storm water quantity impact on the City's storm water infrastructure (which includes storm sewer, inlets, box culverts, pipe culverts, and open drainage ways including creeks, rivers, gutter flow, and road ditches). This credit will not be granted if~~:~~

   - ~~Discharge point is upstream of any public drainage facility for which the City has maintenance responsibilities.~~
   - ~~Portion draining off site has no impervious surface.~~
   - ~~Discharge~~ the discharge point is outside corporate limits but ultimately drains back into the ~~City~~city.
   - ~~Storm water is discharged to a creek or stream and property owner does not own and maintain their own NPDES permit for the discharge.~~

   Existing and new properties that meet Level 5 Credit criteria are eligible to apply for and receive a 100% credit.

6. Level 6 Credit (Partial Discharge Credit) – Partial Credit

   Customers can qualify for a partial credit if their property is contiguous to and discharges some of the storm water generated from impervious surfaces directly to unincorporated areas. Said storm water would be required to have no storm water quantity impact on the City's storm water infrastructure (which includes storm sewer, inlets, box culverts, pipe culverts, and open drainage ways including creeks, rivers, gutter flow, and road ditches). This credit will not be granted if the discharge point is outside corporate limits but ultimately drains back into the city.

   Existing and new properties that meet Level 6 Credit criteria are eligible to apply for and receive a partial credit by essentially splitting their property into a portion that would be eligible for Level 5 Credit and the remainder that would be billed in accordance with our policy and eligible for Level 1-4 Credit, if applicable.

Formatted: Left, Indent: Left: 0.5", Right: 0.08", Space Before: 0 pt, No bullets or numbering

Formatted: List Paragraph, Widow/Orphan control

Formatted: Font: (Default) Arial, 12 pt

MARSHALLTOWN
MORE THAN EVER

APPLCIATION REQUIREMENTS AND CREDIT DETERMINATION

A credit application will not be considered complete and will not be processed unless accompanied by the application fee and all appropriate forms and information as required in this policy.

1. Credit application fee is:
   - Single-family residential parcels: $50.00
   - All other parcels: $100.00

2. The ~~owner~~ customer shall supply the following technical information along with their application for ~~Rate~~ Reduction Credits (Level 1-4).
   - Conceptual site plan and structural control location diagram.
   - Locations, dimensions, and characteristics of all proposed and existing drainage patterns and facilities.
   - Existing and proposed grading and location/size of all structures, parking, driveways, and other impervious areas.
   - Detailed engineering calculations providing the results of routing the storm runoff for the 100 year, or 50-year, storm event through the basin, along with comparison to pre-development runoff rates. Total storage volume calculations are also required along with detention basin elevations. An Iowa Professional Engineer must certify the calculations.
   - Specific location(s) of storm water discharge point(s).
   - As-built data, certified by an Iowa Professional Engineer, shall be submitted upon completion of construction to complete the application. The as-built data must verify the capacity of the storm water facilities for which the credit has been applied.
   - A maintenance plan which shall include:
     - Description and locations of storm water facilities to be inspected and maintained by the applicant.
     - Schedule for inspection and maintenance that will be performed to ensure that the facility is functioning as designed and number of times per year that basic maintenance (such as erosion control and/or mowing) activities will be performed.
     - Method(s) for disposal of extracted material from maintenance activities.
     - Name and phone number of person(s) responsible for inspection and maintenance.

3. The ~~owner~~ customer shall supply the following technical information along with their application for a ~~Direct~~ Discharge Credit (Level 5 & 6).
   - Topographic ~~survey~~ map of the applicant's parcel(s) sufficient to verify general

Formatted

Formatted

drainage patterns and identify key drainage boundaries used to determine the portion of the parcel(s) draining to unincorporated areas. In cases of Level 6 application, it is particularly important to identify the exact drainage boundary, including breaks and which direction portions of pavement and roofs drain. Gutter systems, tile, or other drainage pipes must also be shown.

- ~~Layout of the drainage system of the property including location and elevations of natural and structural features.~~
- Specific location(s) of storm water discharge point(s)

4. ~~NOTE:~~ Developers are encouraged to apply for all applicable credit levels ~~of credits~~ on new developments as part of the normal development plan review procedures. The credits, as well as the storm water rates, do not go into effect until the construction is complete or upon granting of conditional occupation. Credits will not begin until as-built data has been submitted.

~~4. The owner shall supply a maintenance plan along with the Rate Reduction Credit application. The plan shall include:~~

- ~~Description and locations of storm water facilities to be inspected and maintained by the applicant.~~
- ~~Schedule for inspection and maintenance that will be performed to ensure that the facility is functioning as designed and number of times per year that basic maintenance (such as erosion control and/or mowing) activities will be performed.~~
- ~~Method(s) for disposal of extracted material from maintenance activities.~~
- ~~Name and phone number of person(s) responsible for inspection and maintenance.~~

5. P~~Existing p~~roperties ~~will be eligible for credit as long as they meet the requirements of the City of Marshalltown Storm Water Utility Rate Credit Policy. In this case, the information required in Numbers 2 and 3 above for Rate Reduction Credits and any other supporting material shall be submitted for review. Retrofitting of~~ with existing storm water facilities ~~is also~~are allowed to provide or increase the amount of credit for a property. The process for retrofitting existing structures is similar to that for new developments. As-built data with applicable calculations shall be submitted for the existing or retrofitted storm water facility before the credit will be applied.

6. The ~~owner~~ customer shall be required to sign a statement certifying that the information is correct and acknowledging that the credit determination will be based on information provided. A later determination that the information was inaccurate may result in loss of credit.

7. The City will process applications within sixty (60) days of submittal of the complete and

Formatted: Font: (Default) Arial, 12 pt

Formatted: List Paragraph, Numbered + Level: 1 + Numbering Style: 1, 2, 3, … + Start at: 1 + Alignment: Left + Aligned at: 0.25" + Indent at: 0.5", Widow/Orphan control

Formatted: Font: (Default) Arial, 12 pt

correct application package. A written notice will be issued at that time as to whether the request has been granted, denied, or granted in part. The written notice shall set forth the reason or reasons for the decision and shall be sent to the customer~~ by mail~~. Billing adjustments required to implement approved credits shall be applied retroactively to the date the customer submitted a complete application. Adjustments shall be made by crediting the customer's storm water charges until any overpayment has been fully repaid. A pending application for credit shall not constitute a valid reason for non-payment of the current storm water charges. In the case of new development, storm water charges and the associated credits detailed herein do not apply until construction is complete or upon granting of conditional occupancy, whichever is earlier.

MAINTENANCE AND CREDIT PROGRAM COMPLIANCE

All storm water facilities that receive a credit must be maintained by the applicant in a manner to assure that they remain as constructed and function as intended. A report of all operations/maintenance (O&M) activities is required to be submitted on an annual basis to remain eligible for the storm water credit.

The City will issue an order to repair the storm water facilities if the facility is found to not be functioning properly. The applicant will be notified and given sixty (60) days to address the deficiencies and bring the facility to full compliance. The credit will be forfeited if the deficiencies have not been corrected within 60 days of notice of noncompliance. The ~~property owner~~ customer will have to address the site deficiencies resulting in the forfeiture and reapply for a new storm water credit upon forfeiture of the storm water credit. Any ~~property owner~~customer who fails to comply with a repair order within 60 days shall be ineligible to reapply for credit for a period of two years. The credit application fee will not be waived in this situation.

POLICY
STORM WATER UTILITY RATE CREDIT

Adopted April 22, 2013 (Resolution 2013-077)
Amended April 10, 2023 (Resolution 2023-071)

MARSHALLTOWN
MORE THAN EVER

INTRODUCTION & HISTORY

The City Council of the City of Marshalltown (City), Iowa amended the Code of Ordinance of the City of Marshalltown, Iowa, 2003 by modifying Article IV. Storm Water. The purpose of the amendment was to modify the storm water rate charged to all developed properties in the City as well as the fee in lieu of detention. The storm water rate provides revenue to fund operation and maintenance of storm water infrastructure, storm water utility capital projects, and to meet storm water permit requirements.

Storm water rates are in proportion to the demand that each customer's property places on the storm water drainage system. The amount of impervious area on developed properties increases the amount of storm water runoff to the storm water drainage system and is the major contributing factor in water pollution and erosion. Impervious area has a direct and proportional relationship to the estimated amount of water that leaves a property as storm water runoff. Assessment of the storm water rate is based on the impervious area on each property.

The City of Marshalltown has established a credit program through which a customer is eligible to reduce their monthly storm water rate.

The 2013 adopted policy outlines 5 different credit levels that a customer can apply for a full or partial credit to reduce their monthly storm water rate. The 2023 amendment provides for one additional credit level (Level 6) that a customer can apply for.

ELIGIBILITY

<u>Residential:</u>

A residential customer may be eligible for a storm water utility rate Discharge Credit (Level 5 or Level 6) when the following condition applies:

1. All storm water or a portion of the storm water generated from impervious areas of the developed property discharges directly to unincorporated areas.

Non - Residential:

A non-residential customer may be eligible for a storm water utility Reduction Credit (Levels 1-4) when the following conditions apply:

1. The customer constructs and maintains private storm water detention or retention facilities onsite that effectively reduce surface water runoff from that parcel to any City storm water collection or conveyance facility.
2. The private storm water or retention facility meets the credit criteria described in this policy.
3. *Please note - properties draining to public storm water detention or retention facilities are not eligible for a storm water utility rate credit.*

A non-residential customer may be eligible for a storm water utility rate Discharge Credit (Level 5 or Level 6) when the following condition applies:

1. All storm water or a portion of the storm water generated from impervious areas of the developed property discharges directly to unincorporated areas.

CREDIT CRITERIA

Reduction Credits

Storm water runoff Reduction Credits are available to non-residential customers that restrict the peak discharge from a developed site through onsite storm water facilities, such as detention and retention ponds that are privately designed, constructed, and maintained to City standards and requirements. Property owners of private storm water detention or retention facilities may, at their option, apply for the Reduction Credits described below.

1. Level 1 Credit (Rate Reduction Credit) – 25% Credit

   Currently, the City of Marshalltown requires new developments to provide storm water detention as specified by Iowa Statewide Urban Design and Specifications (SUDAS) criteria. Storm water facilities qualify for the Level 1 Credit if the facility meets the SUDAS criteria stating that the post-development peak storm water runoff rate from the developed site for the 100-year frequency storm shall not exceed the pre-development peak storm water runoff rate for the 5-year frequency storm.

   Existing and new properties that meet this criterion are eligible to receive a 25% credit.

2. Level 2 Credit (Additional Rate Reduction Credit) – 20% Credit

   Storm water facilities that qualify for the Level 1 Credit can also qualify for the Level 2 Credit if the facility further reduces the post-development peak storm water runoff rate for the 100-year design storm by at least 20% below the pre-development peak storm water runoff rate for the 5-year frequency storm.

   Existing and new properties that meet both Level 1 Credit and Level 2 Credit criteria are eligible to receive an additional 20% credit.

3. Level 3 Credit (Additional Volume Credit) – 20% Credit

   Storm water facilities that qualify for the Level 1 Rate Reduction Credit can also qualify for the Level 3 Credit if the facility provides 20% more storage volume than required for the 100-year frequency storm.

   Existing and new properties that meet both Level 1 Credit and Level 3 Credit criteria are eligible to receive an additional 20% credit.

4. Level 4 Credit (Alternative Rate Reduction Credit) – 10% Credit

   Recognizing that many privately-maintained storm water facilities were designed and constructed before the current SUDAS criteria, the City of Marshalltown offers a partial credit. Storm water facilities can qualify for the Level 4 Credit if post-development peak storm water runoff rate from the developed site for the 50-year frequency storm does not exceed the pre-development peak storm water runoff rate from the 5-year frequency storm.

   Existing properties with storm water facilities that meet Level 4 Credit criterion but do not qualify for the Level 1 Credit are eligible to receive a 10% credit.

A customer can receive all of Level 1, 2, and 3 Credits for a total of 65% credit if the private storm water facility qualifies. A customer can, alternately, qualify for Level 4 Credit for a 10% credit.

Discharge Credits

Storm water Discharge Credits are available to residential or non-residential customers that discharge their storm water directly to unincorporated areas.

5. Level 5 Credit (Direct Discharge Credit) - 100% credit

   Customers can qualify for this credit if their property is contiguous to and discharges ALL storm water from the property directly to unincorporated areas. All storm water would be required to have no storm water quantity impact on the City's storm water infrastructure (which includes storm sewer, inlets, box culverts, pipe culverts, and open drainage ways including creeks, rivers, gutter flow, and road ditches). This credit will not be granted if the discharge point is outside corporate limits but ultimately drains back into the city.

   Existing and new properties that meet Level 5 Credit criteria are eligible to apply for and receive a 100% credit.

6. Level 6 Credit (Partial Discharge Credit) – Partial Credit

   Customers can qualify for a partial credit if their property is contiguous to and discharges some of the storm water generated from impervious surfaces directly to unincorporated areas. Said storm water would be required to have no storm water quantity impact on the City's storm water infrastructure (which includes storm sewer, inlets, box culverts, pipe culverts, and open drainage ways including creeks, rivers, gutter flow, and road ditches). This credit will not be granted if the discharge point is outside corporate limits but ultimately drains back into the city.

   Existing and new properties that meet Level 6 Credit criteria are eligible to apply for and receive a partial credit by essentially splitting their property into a portion that would be eligible for Level 5 Credit and the remainder that would be billed in accordance with our policy and eligible for Level 1-4 Credit, if applicable.

APPLCIATION REQUIREMENTS AND CREDIT DETERMINATION

A credit application will not be considered complete and will not be processed unless accompanied by the application fee and all appropriate forms and information as required in this policy.

1. Credit application fee is:
    - Single-family residential parcels: $50.00
    - All other parcels: $100.00

2. The customer shall supply the following technical information along with their application for Reduction Credits (Level 1-4).
    - Conceptual site plan and structural control location diagram.
    - Locations, dimensions, and characteristics of all proposed and existing drainage patterns and facilities.
    - Existing and proposed grading and location/size of all structures, parking, driveways, and other impervious areas.
    - Detailed engineering calculations providing the results of routing the storm runoff for the 100 year, or 50-year, storm event through the basin, along with comparison to pre-development runoff rates. Total storage volume calculations are also required along with detention basin elevations. An Iowa Professional Engineer must certify the calculations.
    - Specific location(s) of storm water discharge point(s).
    - As-built data, certified by an Iowa Professional Engineer, shall be submitted upon completion of construction to complete the application. The as-built data must verify the capacity of the storm water facilities for which the credit has been applied.
    - A maintenance plan which shall include:
        - Description and locations of storm water facilities to be inspected and maintained by the applicant.
        - Schedule for inspection and maintenance that will be performed to ensure that the facility is functioning as designed and number of times per year that basic maintenance (such as erosion control and/or mowing) activities will be performed.
        - Method(s) for disposal of extracted material from maintenance activities.
        - Name and phone number of person(s) responsible for inspection and maintenance.

3. The customer shall supply the following technical information along with their application for a Discharge Credit (Level 5 & 6).
    - Topographic map of the applicant's parcel(s) sufficient to verify general drainage patterns and identify key drainage boundaries used to determine the portion of the parcel(s) draining to unincorporated areas. In cases of Level 6 application, it is particularly important to identify the exact drainage boundary, including breaks and which direction portions of pavement and roofs drain. Gutter systems, tile, or other drainage pipes must also be shown.
    - Specific location(s) of storm water discharge point(s)

4. Developers are encouraged to apply for all applicable credit levels on new developments as part of the normal development plan review procedures. The credits, as well as the storm water rates, do not go into effect until the construction is complete or upon granting of conditional occupation. Credits will not begin until as-built data has been submitted.

5. Properties with existing storm water facilities are allowed to provide or increase the amount of credit for a property. The process for retrofitting existing structures is similar to that for new developments. As-built data with applicable calculations shall be submitted for the existing or retrofitted storm water facility before the credit will be applied.

6. The customer shall be required to sign a statement certifying that the information is correct and acknowledging that the credit determination will be based on information provided. A later determination that the information was inaccurate may result in loss of credit.

7. The City will process applications within sixty (60) days of submittal of the complete and correct application package. A written notice will be issued at that time as to whether the request has been granted, denied, or granted in part. The written notice shall set forth the reason or reasons for the decision and shall be sent to the customer. Billing adjustments required to implement approved credits shall be applied retroactively to the date the customer submitted a complete application. Adjustments shall be made by crediting the customer's storm water charges until any overpayment has been fully repaid. A pending application for credit shall not constitute a valid reason for non-payment of the current storm water charges. In the case of new development, storm water charges and the associated credits detailed herein do not apply until construction is complete or upon granting of conditional occupancy, whichever is earlier.

MAINTENANCE AND CREDIT PROGRAM COMPLIANCE

All storm water facilities that receive a credit must be maintained by the applicant in a manner to assure that they remain as constructed and function as intended. A report of all operations/maintenance (O&M) activities is required to be submitted on an annual basis to remain eligible for the storm water credit.

The City will issue an order to repair the storm water facilities if the facility is found to not be functioning properly. The applicant will be notified and given sixty (60) days to address the deficiencies and bring the facility to full compliance. The credit will be forfeited if the deficiencies have not been corrected within 60 days of notice of noncompliance. The customer will have to address the site deficiencies resulting in the forfeiture and reapply for a new storm water credit upon forfeiture of the storm water credit. Any customer who fails to comply with a repair order within 60 days shall be ineligible to reapply for credit for a period of two years. The credit application fee will not be waived in this situation.

2023-072

RESOLUTION SUPPORTING AND AUTHORIZING THE APPLICATION FOR THE HUD LEAD-BASED PAINT HAZARD REDUCTION PROGRAM GRANT FROM THE U.S. DEPARTMENT OF HOUSING AND URBAN DEVELOPMENT

WHEREAS the City of Marshalltown (hereinafter referred to as the "City"), State of Iowa, is a political subdivision organized and existing under the law and the Constitution of the State of Iowa (the "State"); and

WHEREAS the City of Marshalltown has been making homes lead safe for 20 years in Marshalltown; and

WHEREAS the City of Marshalltown recognizes the need to eliminate lead poisoning and continues to support the goals established by the U.S. Department of Housing and Urban Development (HUD), on the elimination of these poisonings; and

WHEREAS the City is prepared to meet the 10% minimum match requirement of grant funding using a combination of in-kind contributions, property owner contributions and cash contributions if needed through City funds to meet the minimum requirement; and

WHEREAS the City Council finds this application to be within the best interest of the City and if awarded the City will administer the program and will enter into detailed agreements regarding the administration of the program with participating entities.

NOW, THEREFORE BE IT RESOLVED BY THE COUNCIL OF THE CITY OF MARSHALLTOWN, IOWA, AS FOLLOWS:

Section 1. That the staff of the City Housing and Community Development Department is directed to apply for HUD funding under the Lead Hazard Reduction Grant Program FR-6600-N-13 to provide for education, outreach, identification, removal and remediation of lead-based paint hazards and for other items related to the lead hazard reduction and healthy homes repairs in an amount not to exceed the maximum allowable grant award set by HUD of $5,000,000 dollars for lead hazard reduction and $700,000 for healthy homes interventions.

Section 2. The City council agrees to provide the necessary matching contribution to meet the required minimum 10% amount.

Section 3. If awarded that the Mayor and City staff are authorized to negotiate the terms of the award and execute any required contracts and documents associated with the acceptance of the award.

Passed this _____ day of April 2023 and signed this _____ day of April 2023.

CITY OF MARSHALLTOWN, IOWA

_____

Joel T.S. Greer, Mayor

ATTEST:

_____

Alicia Hunter, City Clerk

Joel Greer, Mayor
Jessica Kinser, City Administrator
24 North Center Street
Marshalltown, IA 50158
PH 641.754.5701 | FX 641.754.5717

MARSHALLTOWN
IOWA

TO: Mayor, Council & City Administrator
FROM: Michelle Spohnheimer, Housing & Community Development Director
DATE: 04/10/2023
RE: Application for HUD Lead Based Paint Hazard Reduction Program Grant

Strategic Plan:

☒ Strategy 1: Expand and improve development in the community.
☒ Strategy 2: Enhance Marshalltown's public image.
☒ Strategy 3: Continually improve and sustain the City's infrastructure, organization, and services.
☒ Strategy 4: Partner with citizens, for-profit, non-profit, and others to improve quality of life.

Plan Objective:

- *Strategy 1 – Incentivize redevelopment of existing buildings.* The primary use of funds is to remediate lead-based paint hazards in qualifying homes built before 1978. Typical work includes items such as window replacement, siding and paint stabilization.
- *Strategy 2 – Reduce blight and promote safety in neighborhoods.* The remediation work the program includes has a secondary benefit of reducing blight in neighborhoods when items that have been deferred are updated.
- *Strategy 3 – Review City policies, procedures, plans, ordinances, programs and services for updates and efficiencies.* This program is a competitive Federal grant program. The City has the option of applying however without the funds we would not be able to offer the program.
- *Strategy 4 – Identify partners to address community issues like homelessness and mental health.* Lead poisoning continues to be a concern for children across the country and in Marshalltown. We work with local partners to help identify families that may qualify and to provide resources and information.

Recommendation: City staff is recommending that the Council approve the resolution authorizing the Housing & Community Development Director to apply for HUD funding under the notice of funding for the Lead Hazard Reduction Grant Program (FR-6600-N-13) and authorizing the Mayor and staff to execute the contract and required paperwork if awarded.

Budget Impact: The maximum grant award for our community if $5,000,000 under the lead hazard reduction funding and $700,000 in healthy home supplement funding. A 10% ($500,000 if max award) matching contribution to the lead hazard reduction funding is required and additional points are awarded if the match reaches 15%. Match funding can come from various sources which we have included property owner contributions and in-kind contributions such as use of City office space and supportive services from Human Resources and Finance.

There is a possibility that additional funding may be necessary to meet the minimum 10% requirement and if awarded staff would propose a request for Council to provide a direct contribution through a

council designated fund such as local option sales tax. Based on initial estimates, approximately $100,000 may be needed over a four-year period. If other matching funds are secured there would not be a need to allocate additional dollars. Historically match has been satisfied with outside and in-kind sources. A final budget will be negotiated with HUD if awarded.

Description/Background: The City of Marshalltown has administered a lead grant since April 2003

- 2018_IALHB0665-18 - $3,449,788
- 2014_IALHB0587-14 - $3,400,000
- 2012_IALHB0518-12 - $2,480,000
- 2008_IALHB0421-08 - $2,591,227
- 2005_IALHB0292-05 - $2,275,427
- 2003_IALHB0202-02 - $1,999,388
- **TOTAL GRANT FUNDING - $16,195,830**

2023-073

RESOLUTION APPROVING THE FY2023-FY2027 CAPITAL IMPROVEMENT PLAN

WHEREAS, the Notice of Public Hearing on approval of the five-year Capital Improvement Plan for the City of Marshalltown, Iowa for the fiscal years 2023 through 2027 was published in the Marshalltown Times Republican on March 30, 2023; and

WHEREAS, a public hearing was held according to the published notice as required by law; and

WHEREAS, the minutes record any oral or written comments, questions or objections filed; and

WHEREAS, investing in capital improvements is essential for the City to maintain its current infrastructure and provide expanded infrastructure to enhance municipal services and provide increased citizen mobility; and

WHEREAS, the planning for capital improvements is important for creating an environment that encourages job creation and business development; and

WHEREAS, the City Council has reviewed and developed a schedule of capital projects for the five-year period.

NOW THEREFORE, IT IS HEREBY RESOLVED BY THE CITY COUNCIL OF THE CITY OF MARSHALLTOWN, IOWA, that the Capital Improvements Plan (CIP) documents for the fiscal years 2023-2027 be approved.

Passed this 10th day of April 2023, and signed this _____ day of April 2023.

CITY OF MARSHALLTOWN, IOWA

_____

Joel T.S. Greer, Mayor

ATTEST:

_____

Alicia Hunter, City Clerk

Joel Greer, Mayor
Jessica Kinser, Administrator
Alicia Hunter, City Clerk
24 North Center Street
Marshalltown, IA 50158-4911
Tel - (641) 754-5799
Fax - (641) 754-5717

MARSHALLTOWN
IOWA

City Administrator's Office

To: Mayor Greer and the City Council
From: Jessica Kinser, City Administrator
Date: March 22, 2023
RE: CIP FY23 to 27- FINAL DRAFT

Attached with this memo you will find an updated Project by Fund report and Project Worksheets as the second draft of the Capital Improvement Plan (CIP).

1. Projects by Fund- shows where the money comes from and what it is proposed to be used for. Some projects have funding from multiple funds and will appear in multiple funds. This report should always tie back to the Tyler financial system budget reports.

2. Project Worksheets- provides detail for each specific project, including descriptions and justifications. The funding sources for each project are identified near the bottom of each page. This could not be generated by fund and only by department, so they do not appear in an order that corresponds to the first report. To find a project in the many pages, I recommend using the search function in Adobe to get to what you are looking for.

The following is from the original memo from the January 9th Council meeting with highlights identifying changes made.

- Fund 030- The revenue source in this fund is the CIP tax levy ($0.675/$1,000 of taxable valuation) and is used to fund the regular capital needs of departments rather than the General Fund (001). 15% of the funds are to be used for large capital equipment purchases, which we are showing if Fund 032.

- Fund 031- This is the Building Maintenance Fund, and is typically funded by the sale of City-owned buildings or other fixed assets. This list of projects is more robust than in prior years thanks to Heather and David Deemer. We will be bringing a proposal to the Council in 2023 to conduct an overall facilities study and maintenance plan which will add to this listing. We reviewed the project listing, as there were a high number planned for FY24. In order to not overspend the balance remaining in the FY24, we moved some projects out to FY25. If the franchise fee is approved, this will provide ongoing funding for City facility projects.

City Council
Al Hoop, Gabriel Isom, Barry Kell, Mike Ladehoff,
Jeff Schneider, Gary Thompson, Dex Walker

- Fund 032- This fund is only for the accounting of the purchase of larger dollar Fire vehicles, with the next to occur in fiscal year 2026. 15 percent of the CIP tax levy is coming into this fund. This fund has been updated with the tax revenues.

- Fund 110- The Road Use Tax fund captures many projects. Large projects to note are the repayment of the work to occur on Highway 14/South Center Street (3 installments) and Railroad Crossing Safety Improvements/Quiet Zone (work outside of railroad right-of-way). Change orders for the Edgewood Extension outside of Capital LOST will also come from this fund. Road Use Tax also pays for all equipment necessary for the Engineering, Street and Utility divisions of Public Works.

- Fund 121- This accounts for the LOST- Capital designated funds, which is no longer a funded category. Projects to utilize these funds include the Edgewood Extension (local, non-eligible grant costs) and South 7th Avenue Extension. The balance on the fund is -$71,500 to show that the Capital funds are fully-designated and the source of the City Hall Parking Lot is Council-designated LOST.

- Fund 132- Two projects are partially accounted for in this fund- the CDBG funds for Elks Park and DOT Traffic Safety Improvement grants, which is active for a traffic signal controller project currently. This fund also accounts for non-capital grants as well so more activity will show in the Tyler budget reports.

- Fund 133- This fund is showing this year to account for the federal and state hazard mitigation funds coming in for the Coliseum Generator. The expenses are spread over three funds (031, 133, 140). The fund does account for other federal grants that are not capital-related, so the financial reports will show activity not shown in the CIP.

- Fund 145- This fund is new for fiscal year 2024. This is the Tornado fund that accounted for FEMA projects as well as insurance proceeds. The donated resources will be fully received in the current fiscal year, so we are proposing using those funds and the equipment reimbursement funds to pay for equipment replacement for those used in the tornado response. This includes a truck for Parks and multiple pieces of equipment for the Street Department.

- Funds 151, 152 & 177- These fund accounts for Police special revenues, of which some capital spending occurs. There are no planned purchases but this provides budgetary authority to make purchases.

- Fund 170- The Library Gift Fund includes donations to the Library which are then allocated to specific uses. The planned capital expenses include a portion remaining due on the Bookmobile and the construction of a garage for the Bookmobile. The Library is also planning to undertake an interior remodel to create more meeting spaces using donations.

- Fund 311- This fund is accounting for the Edgewood Extension project. All federal and state grants will flow through this fund. The local portion of the project is shown in Fund 121 and 110. The next major project using STP funds is Highland Acres Road.

- Fund 312- This is the Airport capital fund and is showing the activity for the terminal and hangar project that remains in this fiscal year. It is also showing future FAA CIP projects and the associated federal revenue and costs, which have a local match in Fund 353.

- Fund 353- This fund is a "holding" fund for future projects for which general obligation bonds are the proposed funding source and the debt service levy is the proposed repayment source. This includes a number of park projects as well as street and other infrastructure. We will discuss these items in more detail with the Debt Capacity Workbook, but the individual project worksheets have more detail for the proposed projects.

- Fund 355- The Dangerous and Dilapidated (D&D) Building Fund reflects the revenue transferred from the General Fund as well as recent bond revenues. A significant amount of work is occurring in the current fiscal year, with lesser amounts moving forward. It is estimated that the fund will run out of money in FY25, so a borrowing is proposed for FY26 (see fund 353).

- Fund 360- This fund accounts for the bond proceeds and projects from the 2019 GO Bond. Recent Council actions moved different projects into this fund that had actual expenditures in place of projects that were still budgeted but had no expenditures. This was done to avoid owing the IRS the difference between interest earned on the funds and the interest paid on bond. This fund is considered closed ending fiscal year 2023.

- Fund 362- This fund accounts for the 2020 GO Bond and projects. The only project not complete in this fund is the Railroad Crossing Safety Improvements/Quiet Zone. This is still scheduled to occur but we are experiencing difficulties with Union Pacific on approvals.

- Fund 363- This fund accounts for the 2021 GO Bond projects, including State Street and the Center Street Viaduct. Other bond projects have been swapped between funds to use up older dollars first. This is true for some Police and Fire Building projects, which were moved from Fund 354. As noted earlier, Fund 360 had projects moved to this fund, including Kiwanis Park, Park 101, and the Farmer's Market.

- Fund 364- This fund accounts for the 2022 GO Bond projects, which includes a number of park projects as well as street funding. Any amendments that could not occur in this CIP will be brought forward in an FY24 budget amendment with the next budget process.

- Fund 389- This fund accounts for the American Rescue Plan Act (ARPA) funds, which are currently allocated to the State Street project and the Edgewood detention pond project. An explanation of the remaining balance can be found on the fund sheet.

- Fund 395- This is the fund that we capture a number of our economic development-related street projects in, including South 7th Avenue and Creekside Estates, which will both have developer payments to the City.

- Fund 612- This fund contains capital projects related to the Wastewater Treatment Plant. The larger SRF-funded projects have been moved to other wastewater funds.

- Fund 615- This fund is accounting for two major projects – the point-in-place repair project and the Treatment Plant headworks project. Both are being funded mostly by a loan from the State Revolving Fund, with some additional cash on-hand supporting the unfunded portions.

- Fund 616- This fund includes projects which have sanitary sewer costs associated with them, like State Street and South 7th Avenue Extension. This fund is also the home to a manhole rehab project in FY25-27.

- Fund 690- The Transit Fund captures capital purchase that support Marshalltown Municipal Transit. Bus replacements are set to occur in FY24 and FY26, which will have an 85% federal grant for the standard length, and local cost for the remainder (and extra length as proposed).

- Fund 740/741- The Stormwater Fund includes equipment, vehicles, repairs, and maintenance for the stormwater collection system and lift stations. The 4th Street/Meadow Lane project is set to finish this year. The next large projects are actually shown in Fund 353, which would be State Street storm outlets in FY25 and 26.

- Fund 750- Compost activities are accounted for in this fund, which are supported by user fees of the Compost Facility. The current fiscal year includes a compost turner, using fund balance. Future years would be paid for with user fees from a future year if no fund balance accrues over time.

The public hearing will be set for April 10th.

City of Marshalltown, Iowa

City Capital Plan Equipment Replacment

FY '23 thru FY '27

SOURCES AND USES OF FUNDS

Source		FY '23	FY '24	FY '25	FY '26	FY '27
030 - CIP FUND						
Beginning Balance		**545,653**	**210,979**	**83,906**	**210**	**56,076**
Revenues and Other Fund Sources						
USE OF MONEY & PROPERTY						
4610.000 INTEREST EARNED		*10,000*	*6,000*	*1,000*	*1,000*	*1,000*
	Total	10,000	6,000	1,000	1,000	1,000
Revenue						
4875.000 REIMBURSEMENTS		*606*	*0*	*0*	*0*	*0*
SALE OF FIXED ASSET		*6,000*	*0*	*0*	*0*	*0*
	Total	6,606	0	0	0	0
PROPERTY TAXES						
4085.000 PROPERTY TAXES- CIP LEVY		*531,281*	*533,157*	*546,237*	*552,037*	*557,892*
4339.000 SF295 BACKFILL		*14,734*	*12,481*	*10,524*	*8,419*	*6,314*
Business Property Tax Credit Backfill		*0*	*17,712*	*16,000*	*16,000*	*16,000*
	Total	546,015	563,350	572,761	576,456	580,206
Total Revenues and Other Fund Sources		562,621	569,350	573,761	577,456	581,206
Total Funds Available		**1,108,274**	**780,329**	**657,667**	**577,666**	**637,282**
Expenditures and Uses						
Capital Projects & Equipment						
AIRPORT						
Sealing Runway Materials (Labor from Street Dept)	AIR0002	*(10,000)*	*0*	*0*	*0*	*0*
CIP Planning Study	ARP_A	*0*	*(50,000)*	*0*	*0*	*0*
Snow Removal Equipment	ARP_SRE	*0*	*(50,000)*	*0*	*0*	*0*
	Total	(10,000)	(100,000)	0	0	0
CITY CLERK						
Copier	E8402010001	*(5,474)*	*0*	*0*	*0*	*0*
	Total	(5,474)	0	0	0	0
CITY WIDE BUILDING MAINTENANCE						
Pickup Truck - Facilities Superintendent	BLDG_VEH	*0*	*0*	*(40,000)*	*0*	*0*
	Total	0	0	(40,000)	0	0
FIRE						
Portable Radios	E0030fir	*0*	*(32,000)*	*(32,000)*	*0*	*0*
Thermal Imaging Camera	E0042fir	*(9,388)*	*(9,388)*	*0*	*0*	*0*
Alumacraft 16' Boat Replacement	E0045fir	*0*	*0*	*0*	*0*	*(8,000)*

Source		FY '23	FY '24	FY '25	FY '26	FY '27
030 - CIP FUND						
Dexter T-600 40 lb Washer	E0049fir	0	0	0	0	(8,000)
SCBA Bottles	E0073fir	(9,465)	0	0	0	0
Lucas CPR Device	E0074fir	(19,990)	0	0	0	0
Exercise Equipment	V0064fir	0	0	(8,000)	0	0
	Total	(38,843)	(41,388)	(40,000)	0	(16,000)
HOUSING						
COPIER: Replace Lanier	E2023	(5,000)	0	0	0	0
	Total	(5,000)	0	0	0	0
INFORMATION SYSTEMS						
Body Camera Servers - MPD	BdyCmraServ	0	0	(15,000)	0	0
Audio Visual Equipment for Council Chambers	Council22	(10,000)	0	0	0	0
Staff Computers	E1000	(22,500)	(22,500)	(20,000)	(22,500)	(22,500)
Servers	E3010	(15,000)	0	(15,000)	0	0
SERVER MPD FILES	ServerPDfile	0	(15,000)	0	0	0
Tyler Servers	Servers	(24,000)	(20,000)	0	0	0
SERVERS-PD (Evidence)	SERVERS-PD	0	0	(15,000)	0	0
	Total	(71,500)	(57,500)	(65,000)	(22,500)	(22,500)
LIBRARY						
Upgraded Automation System	11	(19,462)	(20,435)	(21,457)	(22,530)	(23,656)
Mobile Services Outreach Unit	LIBVEH	(61,489)	0	0	0	0
	Total	(80,951)	(20,435)	(21,457)	(22,530)	(23,656)
PARK & RECREATION						
Aquatic Center Improvements	20PR0009	(20,000)	(20,000)	(20,000)	(20,000)	(20,000)
Sidewalk and Trail Maintenance	20PR002	(50,000)	(15,000)	(50,000)	(50,000)	(50,000)
Pickleball Pocket Park	21ColAlley	(9,209)	0	0	0	0
Elks Park Improvements	21PR004	(110,432)	0	0	0	0
Replace Mower 823	22PR002	(27,500)	0	0	0	0
Replace Truck 811 and Snow Blade	23PR007	(52,000)	0	0	0	0
Replace Mower 712	23PR008	(28,250)	0	0	0	0
Peterson Park Improvements	23PR010	(120,000)	0	0	0	0
Parks Wayfinding Signs	24PR001	0	(50,000)	0	0	0
Replace Mower 714 w/Snow Equipment	24PR004	0	(25,000)	0	0	0
Timber Creek Park Bathroom	24PR005	0	(70,000)	0	0	0
Jaycees Park Improvements	25PR001	0	0	(150,000)	0	0
Vehicle/Mower Replacement	25PR002	0	0	(50,000)	0	0
Arnolds Park Improvements	26PR001	0	0	0	(150,000)	0
Vehicle/Mower Replacement	26PR003	0	0	0	(50,000)	0
Vehicle/Mower Replacement	27PR001	0	0	0	0	(50,000)
Assistance League Improvements	27PR002	0	0	0	0	(150,000)
Goldfinch fishing dock	L2973	(33,000)	0	0	0	0
Riverview Park Entry Sign	Sign 21.22	(12,736)	0	0	0	0
Vehicle/Mower Replacement	TR709	0	(50,000)	0	0	0
	Total	(463,127)	(230,000)	(270,000)	(270,000)	(270,000)

Source		FY '23	FY '24	FY '25	FY '26	FY '27
030 - CIP FUND						
POLICE						
BODY CAMERAS	BODY CAMERA	*(15,000)*	*(15,000)*	*(15,000)*	*(15,000)*	*(15,000)*
COPIER REPLACEMENT	COPIERS	*0*	*0*	*(34,000)*	*0*	*0*
TACTICAL EQUIPMENT	TACT EQUIP	*0*	*(5,000)*	*0*	*(5,000)*	*0*
TASERS	TASERS	*(6,000)*	*(6,000)*	*(6,000)*	*(6,000)*	*(8,000)*
TRAINING EQUIPMENT	TRN EQUIP	*0*	*(5,000)*	*0*	*(5,000)*	*0*
VEHICLE IT EQUIPMENT - MPD	VEH IT	*0*	*(5,000)*	*0*	*(5,000)*	*0*
VEHICLE REPLACEMENT	VEH RPLCMT	*(190,000)*	*(193,000)*	*(150,000)*	*(155,000)*	*(200,000)*
BODY ARMOR REPLACEMENT	VESTS	*(11,400)*	*(10,000)*	*(16,000)*	*(15,560)*	*(15,650)*
	Total	(222,400)	(239,000)	(221,000)	(206,560)	(238,650)
STREET DIVISION						
Dual A/C Machine - City Mechanic Equipment	E3942	*0*	*(8,100)*	*0*	*0*	*0*
	Total	0	(8,100)	0	0	0
Total Expenditures and Uses		(897,295)	(696,423)	(657,457)	(521,590)	(570,806)
Change in Fund Balance		(334,674)	(127,073)	(83,696)	55,866	10,400
Ending Balance		**210,979**	**83,906**	**210**	**56,076**	**66,476**

Source		FY '23	FY '24	FY '25	FY '26	FY '27
031 - BUILDING MAINTENANCE						
Beginning Balance		**260,114**	**245,256**	**106,981**	**(155,019)**	**(355,019)**
Revenues and Other Fund Sources						
USE OF MONEY & PROPERTY						
4085.000 INTEREST EARNED		*5,000*	*3,000*	*0*	*0*	*0*
	Total	5,000	3,000	0	0	0
Total Revenues and Other Fund Sources		5,000	3,000	0	0	0
Total Funds Available		**265,114**	**248,256**	**106,981**	**(155,019)**	**(355,019)**
Expenditures and Uses						
Capital Projects & Equipment						
AIRPORT						
Sewer Phase W - Septic Tank / Leachfield Replace	ARP_B	*0*	*0*	*(30,000)*	*0*	*0*
Sewer Phase X - Point Repairs / Connect 24hr Rstrm	ARP_F	*0*	*(11,500)*	*0*	*0*	*0*
Sewer Phase Y - Lining Orangeburg under Pvmnt	ARP_G	*0*	*0*	*0*	*(50,000)*	*0*
Sewer Phase Z - 24 Hr Rstrm (Labor from Util Div)	ARP_H	*0*	*0*	*(20,000)*	*0*	*0*
	Total	0	(11,500)	(50,000)	(50,000)	0
CARNEGIE & COLISEUM BUILDINGS						
Drain Tile Install Along State St	CARN_A	*0*	*(15,000)*	*0*	*0*	*0*
Drain Tile Install Along Center St	CARN_B	*0*	*0*	*(12,000)*	*0*	*0*
Carnegie Security Updates - For Council Mtgs	CARN_C	*0*	*0*	*(50,000)*	*0*	*0*
Roof Stairway Dental Limestone Sealant	CARN_D	*0*	*0*	*(20,000)*	*0*	*0*
Coliseum Generator	COL_Gen	*(7,242)*	*(26,775)*	*0*	*0*	*0*
	Total	(7,242)	(41,775)	(82,000)	0	0
CITY HALL						
Replace Windows	CH0009	*0*	*0*	*0*	*0*	*(54,000)*
Replace East Entrance Door and Steps	CH0016	*0*	*0*	*(30,000)*	*0*	*0*
City Hall New Boiler	CH0023	*0*	*0*	*0*	*(150,000)*	*0*
City Hall / YSS Boiler Repair	CH0024	*(12,616)*	*0*	*0*	*0*	*0*
Old Chamber Room Conversion	CH0026	*0*	*0*	*0*	*0*	*(45,000)*
	Total	(12,616)	0	(30,000)	(150,000)	(99,000)
CITY WIDE BUILDING MAINTENANCE						
Wash Bay Renovations	PWB_A	*0*	*(25,000)*	*0*	*0*	*0*
	Total	0	(25,000)	0	0	0
FIRE						
Fire/Police Bldg - Backflow Preventer Replacement	Bldg Mt 012	*0*	*(18,000)*	*0*	*0*	*0*
	Total	0	(18,000)	0	0	0
LIBRARY						
Library Emergency Generator Project	LIB2022	*0*	*0*	*(100,000)*	*0*	*0*
Sidewalks by library building and Boone St.	LIBsidewalks	*0*	*(45,000)*	*0*	*0*	*0*
	Total	0	(45,000)	(100,000)	0	0

Source	FY '23	FY '24	FY '25	FY '26	FY '27
031 - BUILDING MAINTENANCE					
Total Expenditures and Uses	(19,858)	(141,275)	(262,000)	(200,000)	(99,000)
Change in Fund Balance	(14,858)	(138,275)	(262,000)	(200,000)	(99,000)
Ending Balance	**245,256**	**106,981**	**(155,019)**	**(355,019)**	**(454,019)**

Source		FY '23	FY '24	FY '25	FY '26	FY '27
032 - CIP LARGE VEHICLE/EQUIPMENT						
Beginning Balance		**0**	**93,755**	**187,841**	**289,153**	**141,140**
Revenues and Other Fund Sources						
Revenue						
4085.000 PROPERTY TAXES		*93,755*	*94,086*	*101,312*	*101,987*	*102,672*
Total		93,755	94,086	101,312	101,987	102,672
Total Revenues and Other Fund Sources		93,755	94,086	101,312	101,987	102,672
Total Funds Available		**93,755**	**187,841**	**289,153**	**391,140**	**243,812**
Expenditures and Uses						
Capital Projects & Equipment						
FIRE						
R-177 Replacement	V0070fir	*0*	*0*	*0*	*(250,000)*	*0*
Total		0	0	0	(250,000)	0
Total Expenditures and Uses		0	0	0	(250,000)	0
Change in Fund Balance		93,755	94,086	101,312	(148,013)	102,672
Ending Balance		**93,755**	**187,841**	**289,153**	**141,140**	**243,812**

Source		FY '23	FY '24	FY '25	FY '26	FY '27
110 - ROAD USE TAX $						
Beginning Balance		**0**	**0**	**0**	**0**	**200,000**
Revenues and Other Fund Sources						
ROAD USE TAX						
4320.040 ROAD USE TAXES		*1,089,638*	*1,535,291*	*1,382,916*	*1,019,050*	*727,115*
	Total	1,089,638	1,535,291	1,382,916	1,019,050	727,115
Revenue						
SALE OF FIXED ASSET		*29,000*	*0*	*0*	*0*	*0*
	Total	29,000	0	0	0	0
Total Revenues and Other Fund Sources		1,118,638	1,535,291	1,382,916	1,019,050	727,115
Total Funds Available		**1,118,638**	**1,535,291**	**1,382,916**	**1,019,050**	**927,115**
Expenditures and Uses						
Capital Projects & Equipment						
CITY WIDE BUILDING MAINTENANCE						
Wash Bay Renovations	PWB_A	*0*	*(25,000)*	*0*	*0*	*0*
Grandstand Concrete Wall Repair	PWB_B	*0*	*(40,000)*	*0*	*0*	*0*
	Total	0	(65,000)	0	0	0
ENGINEERING DIVISION						
Field Tablets	3504	*(2,000)*	*(2,000)*	*0*	*0*	*(6,500)*
Survey/Inspection Truck	E2131	*0*	*0*	*0*	*0*	*(30,000)*
Computer & Copier/Printer-Sec	E2178	*0*	*(6,500)*	*0*	*0*	*0*
Large Format Scanner & Plotter	E2181	*0*	*0*	*0*	*(12,000)*	*0*
Engineering - CAD/Computer Workstations	E2189	*(12,000)*	*0*	*0*	*(12,750)*	*0*
Storm Water Coordinator Truck/SUV	ENG_A	*0*	*(20,000)*	*0*	*0*	*0*
Total Station Survey Equipment	SE0047	*0*	*0*	*0*	*(45,000)*	*0*
	Total	(14,000)	(28,500)	0	(69,750)	(36,500)
PARK & RECREATION						
Replace Mower 714 w/Snow Equipment	24PR004	*0*	*(15,000)*	*0*	*0*	*0*
Vehicle/Mower Replacement	27PR001	*0*	*0*	*0*	*0*	*(20,000)*
	Total	0	(15,000)	0	0	(20,000)
PUBLIC WORKS - INFRASTRUCTURE						
Median Improvements- Hwy 14 Olive to La Frentz	2019DOTHWY14	*(240,650)*	*(383,500)*	*(383,500)*	*0*	*0*
South 7th Ave. Extension	ECO22001	*(149,881)*	*0*	*0*	*0*	*0*
City-wide Bridge Inspection & Minor Repair	M3453	*(45,000)*	*(45,000)*	*(45,000)*	*(45,000)*	*(45,000)*
Railroad Quiet Zones	RR 001	*0*	*(642,803)*	*0*	*0*	*0*
Edgewood Extension	STR19003	*(104,620)*	*0*	*0*	*0*	*0*
	Total	(540,151)	(1,071,303)	(428,500)	(45,000)	(45,000)
STREET DIVISION						
Dump Truck	E3510	*0*	*(220,588)*	*(405,280)*	*(426,300)*	*(447,615)*
Street Sweeper	E3520	*0*	*0*	*(300,000)*	*0*	*0*
Self Propelled Paint Striper	E3550	*(245,500)*	*0*	*0*	*0*	*0*
Snow Blower	E3900	*0*	*0*	*0*	*(250,000)*	*0*

Source		FY '23	FY '24	FY '25	FY '26	FY '27
110 - ROAD USE TAX $						
Slide in oil distributor	E3940	*0*	*0*	*(75,000)*	*0*	*0*
Ride-On Painter	E3941	*0*	*0*	*(35,000)*	*0*	*0*
Dual A/C Machine - City Mechanic Equipment	E3942	*0*	*(9,900)*	*0*	*0*	*0*
Lasers for Equipment	FY23New	*(5,930)*	*0*	*0*	*0*	*0*
Wheel Loader	V2323	*(202,907)*	*0*	*(83,136)*	*0*	*0*
Street Maintenance Fleet - 3/4 Ton Pickup	V3500	*(36,150)*	*0*	*0*	*0*	*0*
Street Maintenance Fleet - 1 Ton Truck	V3502	*(60,000)*	*0*	*0*	*0*	*0*
Semi Tractor (Head Only_Used)	V3507	*0*	*0*	*0*	*0*	*(80,000)*
Street Maintenance Fleet - 3/4 Ton Pickup	V3508	*0*	*(40,000)*	*0*	*0*	*0*
Street Maintenance Fleet - 1/2 Ton Pickup -Ext Cab	V3509	*0*	*0*	*(35,000)*	*0*	*0*
UTV	V3510	*0*	*(20,000)*	*0*	*0*	*0*
Trailer, Low Boy	V3511	*0*	*0*	*0*	*0*	*(75,000)*
Brine Trailer	V3512	*0*	*(50,000)*	*0*	*0*	*0*
	Total	(550,487)	(340,488)	(933,416)	(676,300)	(602,615)
UTILITY (ELEC/FACIL) DIVISION						
Arc Flash Suit	E3701	*0*	*0*	*(5,000)*	*0*	*0*
LED Traffic Light Replacement	E3704	*0*	*0*	*0*	*(11,000)*	*0*
Traffic Signal Battery Back Ups	E3708	*(14,000)*	*(15,000)*	*(16,000)*	*(17,000)*	*(18,000)*
Repeater at High Street Tower (for radio coms)	UTIL_A	*0*	*0*	*0*	*0*	*(5,000)*
	Total	(14,000)	(15,000)	(21,000)	(28,000)	(23,000)
Total Expenditures and Uses		(1,118,638)	(1,535,291)	(1,382,916)	(819,050)	(727,115)
Change in Fund Balance		0	0	0	200,000	0
Ending Balance		**0**	**0**	**0**	**200,000**	**200,000**

Source		FY '23	FY '24	FY '25	FY '26	FY '27
121 - LOCAL OPTION SALES TAX						
Beginning Balance		**1,700,459**	**68,750**	**(71,500)**	**(71,500)**	**(71,500)**
Expenditures and Uses						
Capital Projects & Equipment						
PUBLIC WORKS - INFRASTRUCTURE						
South 7th Ave. Extension	ECO22001	*(279,104)*	*0*	*0*	*0*	*0*
City Centre Parking Lot Extension (LOST CD)	PLT22001	*(71,500)*	*0*	*0*	*0*	*0*
Edgewood Extension	STR19003	*(1,053,079)*	*(25,000)*	*0*	*0*	*0*
	Total	(1,403,683)	(25,000)	0	0	0
STREET IMPROVEMENT PROGRAM						
Center St Median Curbs (In front of Hy-Vee)	SIP_A	*0*	*(40,250)*	*0*	*0*	*0*
Lincoln Way Transition Concrete Patch	SIP_D	*(100,000)*	*0*	*0*	*0*	*0*
18th Ave Patch	SIP_E	*0*	*(75,000)*	*0*	*0*	*0*
E Main St Reconstruction (5th Ave to 12th Ave)	STR22001	*(128,026)*	*0*	*0*	*0*	*0*
	Total	(228,026)	(115,250)	0	0	0
Total Expenditures and Uses		(1,631,709)	(140,250)	0	0	0
Change in Fund Balance		(1,631,709)	(140,250)	0	0	0
Ending Balance		**68,750**	**(71,500)**	**(71,500)**	**(71,500)**	**(71,500)**

Source		FY '23	FY '24	FY '25	FY '26	FY '27
132 - MISC CAPITAL GRANTS						
Beginning Balance		**0**	**0**	**0**	**0**	**0**
Revenues and Other Fund Sources						
Revenue						
CDBG Grant		*62,362*	*0*	*0*	*0*	*0*
TSIP Grant (IDOT)		*60,000*	*0*	*0*	*0*	*0*
	Total	122,362	0	0	0	0
Total Revenues and Other Fund Sources		122,362	0	0	0	0
Total Funds Available		**122,362**	**0**	**0**	**0**	**0**
Expenditures and Uses						
Capital Projects & Equipment						
PARK & RECREATION						
Elks Park Improvements	21PR004	*(62,362)*	*0*	*0*	*0*	*0*
	Total	(62,362)	0	0	0	0
UTILITY (ELEC/FACIL) DIVISION						
Traffic Controllers (W IDOT Grant)	E3709	*(60,000)*	*0*	*0*	*0*	*0*
	Total	(60,000)	0	0	0	0
Total Expenditures and Uses		(122,362)	0	0	0	0
Change in Fund Balance		0	0	0	0	0
Ending Balance		**0**	**0**	**0**	**0**	**0**

Source		FY '23	FY '24	FY '25	FY '26	FY '27
133 - MISC PUBLIC WORKS GRANTS						
Beginning Balance		**0**	**0**	**0**	**0**	**0**
Revenues and Other Fund Sources						
GRANT						
FEDERAL HAZARD MITIGATION GRANT		*0*	*121,500*	*0*	*0*	*0*
STATE HAZARD MITIGATION GRANT		*0*	*13,500*	*0*	*0*	*0*
	Total	0	135,000	0	0	0
Total Revenues and Other Fund Sources		0	135,000	0	0	0
Total Funds Available		**0**	**135,000**	**0**	**0**	**0**
Expenditures and Uses						
Capital Projects & Equipment						
CARNEGIE & COLISEUM BUILDINGS						
Coliseum Generator	COL_Gen	*0*	*(135,000)*	*0*	*0*	*0*
	Total	0	(135,000)	0	0	0
Total Expenditures and Uses		0	(135,000)	0	0	0
Change in Fund Balance		0	0	0	0	0
Ending Balance		**0**	**0**	**0**	**0**	**0**

Source		FY '23	FY '24	FY '25	FY '26	FY '27
140 - P & R GIFT FUND						
Beginning Balance		**82,275**	**82,275**	**0**	**0**	**0**
Expenditures and Uses						
Capital Projects & Equipment						
CARNEGIE & COLISEUM BUILDINGS						
Coliseum Generator	COL_Gen	*0*	*(82,275)*	*0*	*0*	*0*
	Total	0	(82,275)	0	0	0
Total Expenditures and Uses		0	(82,275)	0	0	0
Change in Fund Balance		0	(82,275)	0	0	0
Ending Balance		**82,275**	**0**	**0**	**0**	**0**

Source		FY '23	FY '24	FY '25	FY '26	FY '27
145- TORNADO DISASTER FUND						
Beginning Balance		**287,864**	**287,864**	**106,864**	**0**	**0**
Revenues and Other Fund Sources						
Revenue						
Interest Earning		*0*	*0*	*0*	*0*	*0*
	Total	0	0	0	0	0
Total Revenues and Other Fund Sources		0	0	0	0	0
Total Funds Available		**287,864**	**287,864**	**106,864**	**0**	**0**
Expenditures and Uses						
Capital Projects & Equipment						
PARK & RECREATION						
Replace Truck 813 - 1 Ton Truck w/box	24PR003	*0*	*(40,000)*	*0*	*0*	*0*
	Total	0	(40,000)	0	0	0
STREET DIVISION						
Dump Truck	E3510	*0*	*(116,000)*	*0*	*0*	*0*
Wheel Loader	V2323	*0*	*0*	*(106,864)*	*0*	*0*
Wheel Loader Grapple Bucket	V3513	*0*	*(25,000)*	*0*	*0*	*0*
	Total	0	(141,000)	(106,864)	0	0
Total Expenditures and Uses		0	(181,000)	(106,864)	0	0
Change in Fund Balance		0	(181,000)	(106,864)	0	0
Ending Balance		**287,864**	**106,864**	**0**	**0**	**0**

Source		FY '23	FY '24	FY '25	FY '26	FY '27
151 - POLICE GRANTS						
Beginning Balance		**0**	**0**	**0**	**0**	**0**
Revenues and Other Fund Sources						
GRANT						
4310.110 FEDERAL OPER GRNT-PD		*10,000*	*10,000*	*10,000*	*10,000*	*10,000*
	Total	10,000	10,000	10,000	10,000	10,000
Total Revenues and Other Fund Sources		10,000	10,000	10,000	10,000	10,000
Total Funds Available		**10,000**	**10,000**	**10,000**	**10,000**	**10,000**
Expenditures and Uses						
Capital Projects & Equipment						
POLICE						
JAG GRANT	JAG	*(10,000)*	*(10,000)*	*(10,000)*	*(10,000)*	*(10,000)*
	Total	(10,000)	(10,000)	(10,000)	(10,000)	(10,000)
Total Expenditures and Uses		(10,000)	(10,000)	(10,000)	(10,000)	(10,000)
Change in Fund Balance		0	0	0	0	0
Ending Balance		**0**	**0**	**0**	**0**	**0**

Source		FY '23	FY '24	FY '25	FY '26	FY '27
152 - OTHER POLICE GRANTS						
Beginning Balance			**0**	**0**	**0**	**0**
Revenues and Other Fund Sources						
GRANT						
4310.110 FEDERAL OPERATING GRNT		*8,000*	*8,000*	*8,000*	*8,000*	*8,000*
	Total	8,000	8,000	8,000	8,000	8,000
Total Revenues and Other Fund Sources		8,000	8,000	8,000	8,000	8,000
Total Funds Available		**8,000**	**8,000**	**8,000**	**8,000**	**8,000**
Expenditures and Uses						
Capital Projects & Equipment						
POLICE						
GTSB GRANT	GTSB	*(8,000)*	*(8,000)*	*(8,000)*	*(8,000)*	*(8,000)*
	Total	(8,000)	(8,000)	(8,000)	(8,000)	(8,000)
Total Expenditures and Uses		(8,000)	(8,000)	(8,000)	(8,000)	(8,000)
Change in Fund Balance		0	0	0	0	0
Ending Balance		**0**	**0**	**0**	**0**	**0**

Source		FY '23	FY '24	FY '25	FY '26	FY '27
170 - LIBRARY GIFT FUND						
Beginning Balance		**25,000**	**0**	**0**	**0**	**0**
Revenues and Other Fund Sources						
MISC REVENUES						
4820.310 DONATIONS-LIBRARY		*115,747*	*800,000*	*0*	*0*	*0*
	Total	115,747	800,000	0	0	0
Total Revenues and Other Fund Sources		115,747	800,000	0	0	0
Total Funds Available		**140,747**	**800,000**	**0**	**0**	**0**
Expenditures and Uses						
Capital Projects & Equipment						
LIBRARY						
Garage for Mobile Outreach Vehicle	LIB2023	*0*	*(100,000)*	*0*	*0*	*0*
Library Interior Renovation	LIBinterior	*(100,000)*	*(700,000)*	*0*	*0*	*0*
Mobile Services Outreach Unit	LIBVEH	*(40,747)*	*0*	*0*	*0*	*0*
	Total	(140,747)	(800,000)	0	0	0
Total Expenditures and Uses		(140,747)	(800,000)	0	0	0
Change in Fund Balance		(25,000)	0	0	0	0
Ending Balance		**0**	**0**	**0**	**0**	**0**

Source		FY '23	FY '24	FY '25	FY '26	FY '27
177 - SEIZED ASSETS						
Beginning Balance		**25,431**	**24,931**	**24,431**	**23,931**	**23,431**
Revenues and Other Fund Sources						
MISC REVENUES						
4610.000 INTEREST EARNED		*500*	*500*	*500*	*500*	*500*
4862.000 SEIZED ASSETS		*3,000*	*3,000*	*3,000*	*3,000*	*3,000*
	Total	3,500	3,500	3,500	3,500	3,500
Total Revenues and Other Fund Sources		3,500	3,500	3,500	3,500	3,500
Total Funds Available		**28,931**	**28,431**	**27,931**	**27,431**	**26,931**
Expenditures and Uses						
Capital Projects & Equipment						
POLICE						
MISC SEIZED ASSET ALLOCATION	SEIZD ASSET	*(4,000)*	*(4,000)*	*(4,000)*	*(4,000)*	*(4,000)*
	Total	(4,000)	(4,000)	(4,000)	(4,000)	(4,000)
Total Expenditures and Uses		(4,000)	(4,000)	(4,000)	(4,000)	(4,000)
Change in Fund Balance		(500)	(500)	(500)	(500)	(500)
Ending Balance		**24,931**	**24,431**	**23,931**	**23,431**	**22,931**

Source		FY '23	FY '24	FY '25	FY '26	FY '27
311 - RISE STREET GRANTS						
Beginning Balance		**0**	**0**	**0**	**0**	**0**
Revenues and Other Fund Sources						
Revenue						
EDA Grant		*2,956,849*	*0*	*0*	*0*	*0*
Federal STP Funds		*0*	*0*	*3,900,000*	*0*	*0*
MWW Contribution		*120,000*	*0*	*0*	*0*	*0*
RISE Grant		*1,640,342*	*0*	*0*	*0*	*0*
	Total	4,717,191	0	3,900,000	0	0
Total Revenues and Other Fund Sources		4,717,191	0	3,900,000	0	0
Total Funds Available		**4,717,191**	**0**	**3,900,000**	**0**	**0**
Expenditures and Uses						
Capital Projects & Equipment						
PUBLIC WORKS - INFRASTRUCTURE						
Edgewood Extension	STR19003	*(4,717,191)*	*0*	*0*	*0*	*0*
	Total	(4,717,191)	0	0	0	0
STREET IMPROVEMENT PROGRAM						
Highland Acres Road Reconstruction	STR21001	*0*	*0*	*(3,900,000)*	*0*	*0*
	Total	0	0	(3,900,000)	0	0
Total Expenditures and Uses		(4,717,191)	0	(3,900,000)	0	0
Change in Fund Balance		0	0	0	0	0
Ending Balance		**0**	**0**	**0**	**0**	**0**

Source		FY '23	FY '24	FY '25	FY '26	FY '27
312 - AIRPORT PROJECTS						
Beginning Balance		**(47,352)**	**(25,239)**	**44,761**	**44,761**	**44,761**
Revenues and Other Fund Sources						
Revenue						
4310.000 STATE GRANT		*395,865*	*0*	*0*	*0*	*0*
4315.770 FEDERAL CAP GRANT-AIRPRT		*211,670*	*150,000*	*450,000*	*4,032,000*	*4,914,000*
Alliant Rebate		*4,370*	*0*	*0*	*0*	*0*
Insurance Proceeds		*8,380*	*0*	*0*	*0*	*0*
INTEREST EARNED		*1,000*	*0*	*0*	*0*	*0*
	Total	621,285	150,000	450,000	4,032,000	4,914,000
Total Revenues and Other Fund Sources		621,285	150,000	450,000	4,032,000	4,914,000
Total Funds Available		**573,933**	**124,761**	**494,761**	**4,076,761**	**4,958,761**
Expenditures and Uses						
Capital Projects & Equipment						
AIRPORT						
Rehab - Taxiway 12/30 Pavement	ARP_C	*0*	*0*	*0*	*(2,394,000)*	*0*
Rehab - Runway 18/36 Pavement	ARP_D	*0*	*0*	*0*	*(1,638,000)*	*0*
Rehab - Runway 13/31 Pavement	ARP_E	*0*	*0*	*0*	*0*	*(4,914,000)*
Sewer Phase X - Point Repairs / Connect 24hr Rstrm	ARP_F	*0*	*(80,000)*	*0*	*0*	*0*
Water Line Replacement	ARP_I	*(40,000)*	*0*	*0*	*0*	*0*
Snow Removal Equipment	ARP_SRE	*0*	*0*	*(450,000)*	*0*	*0*
120' x 100' Hangar & Terminal &Vault	B3011	*(559,172)*	*0*	*0*	*0*	*0*
	Total	(599,172)	(80,000)	(450,000)	(4,032,000)	(4,914,000)
Total Expenditures and Uses		(599,172)	(80,000)	(450,000)	(4,032,000)	(4,914,000)
Change in Fund Balance		22,113	70,000	0	0	0
Ending Balance		**(25,239)**	**44,761**	**44,761**	**44,761**	**44,761**

Source		FY '23	FY '24	FY '25	FY '26	FY '27
353 - CAPITAL PROJECTS						
Beginning Balance		**0**	**0**	**0**	**0**	**0**
Revenues and Other Fund Sources						
Revenue						
REBATES FOR SOLAR PANELS		*0*	*0*	*112,500*	*0*	*0*
	Total	0	0	112,500	0	0
Other Fund Sources						
BOND PROCEEDS		*0*	*11,356,000*	*9,792,500*	*10,738,000*	*19,451,000*
	Total	0	11,356,000	9,792,500	10,738,000	19,451,000
Total Revenues and Other Fund Sources		0	11,356,000	9,905,000	10,738,000	19,451,000
Total Funds Available		**0**	**11,356,000**	**9,905,000**	**10,738,000**	**19,451,000**
Expenditures and Uses						
Capital Projects & Equipment						
AIRPORT						
Rehab - Taxiway 12/30 Pavement	ARP_C	*0*	*0*	*0*	*(266,000)*	*0*
Rehab - Runway 18/36 Pavement	ARP_D	*0*	*0*	*0*	*(182,000)*	*0*
Rehab - Runway 13/31 Pavement	ARP_E	*0*	*0*	*0*	*0*	*(546,000)*
	Total	0	0	0	(448,000)	(546,000)
LIBRARY						
Library Solar Panels	LIBsolar	*0*	*0*	*(400,000)*	*0*	*0*
	Total	0	0	(400,000)	0	0
PARK & RECREATION						
Riverview Park Improvements	23PR009	*0*	*0*	*(3,200,000)*	*(500,000)*	*(3,050,000)*
West End Park Improvements Phase II	23PR011	*0*	*0*	*(700,000)*	*0*	*0*
	Total	0	0	(3,900,000)	(500,000)	(3,050,000)
PUBLIC WORKS - INFRASTRUCTURE						
Dilapidated Building Removal	D&D001	*0*	*0*	*0*	*(300,000)*	*0*
Phase 3- West Main Street	DIPphase3	*0*	*0*	*(480,000)*	*(5,290,000)*	*0*
Phase 4- Church Street	DIPphase4	*0*	*0*	*0*	*(700,000)*	*(7,735,000)*
Sidewalk Gap Projects - Remaining Projects	SdwlkGAP	*0*	*(500,000)*	*(500,000)*	*(500,000)*	*0*
DIP Phase 2- East Main Street (3rd A-Cntr+Center2)	STR22002	*0*	*(7,146,000)*	*0*	*0*	*0*
	Total	0	(7,646,000)	(980,000)	(6,790,000)	(7,735,000)
STORM WATER - INFRASTRUCTURE						
State St Storm Outlet - N 3rd St to N 4th St	STM_A	*0*	*(710,000)*	*0*	*0*	*0*
State St Storm Outlet - N 1st Ave to Lincoln St	STM_B	*0*	*0*	*(1,625,000)*	*0*	*0*
	Total	0	(710,000)	(1,625,000)	0	0
STREET IMPROVEMENT PROGRAM						
SIP - State St / 14th St Box Culvert Overlay	SIP_C	*0*	*0*	*0*	*(110,000)*	*0*
Street Improvement Fund - PlaceHolder	SIP_X	*0*	*(3,000,000)*	*(2,025,000)*	*(2,890,000)*	*(3,000,000)*
Highland Acres Road Reconstruction	STR21001	*0*	*0*	*(975,000)*	*0*	*0*
	Total	0	(3,000,000)	(3,000,000)	(3,000,000)	(3,000,000)

Source	FY '23	FY '24	FY '25	FY '26	FY '27
353 - CAPITAL PROJECTS					
Total Expenditures and Uses	0	(11,356,000)	(9,905,000)	(10,738,000)	(14,331,000)
Change in Fund Balance	0	0	0	0	5,120,000
Ending Balance	**0**	**0**	**0**	**0**	**5,120,000**

Source		FY '23	FY '24	FY '25	FY '26	FY '27
355 - D&D Program						
Beginning Balance		**476,712**	**301,458**	**42,593**	**(55,907)**	**(154,407)**
Revenues and Other Fund Sources						
Revenue						
4610.000 INTEREST EARNED		*5,000*	*500*	*500*	*500*	*500*
Bond Premium		*4,867*	*0*	*0*	*0*	*0*
Sale of FA/Reimbursements		*25,100*	*10,000*	*1,000*	*1,000*	*1,000*
	Total	34,967	10,500	1,500	1,500	1,500
Other Fund Sources						
Bond Proceeds		*610,000*	*0*	*0*	*0*	*0*
Transfer In from GF		*20,000*	*20,000*	*20,000*	*20,000*	*20,000*
	Total	630,000	20,000	20,000	20,000	20,000
Total Revenues and Other Fund Sources		664,967	30,500	21,500	21,500	21,500
Total Funds Available		**1,141,679**	**331,958**	**64,093**	**(34,407)**	**(132,907)**
Expenditures and Uses						
Capital Projects & Equipment						
PUBLIC WORKS - INFRASTRUCTURE						
Dilapidated Building Removal	D&D001	*(840,221)*	*(289,365)*	*(120,000)*	*(120,000)*	*(120,000)*
	Total	(840,221)	(289,365)	(120,000)	(120,000)	(120,000)
Total Expenditures and Uses		(840,221)	(289,365)	(120,000)	(120,000)	(120,000)
Change in Fund Balance		(175,254)	(258,865)	(98,500)	(98,500)	(98,500)
Ending Balance		**301,458**	**42,593**	**(55,907)**	**(154,407)**	**(252,907)**

Source		FY '23	FY '24	FY '25	FY '26	FY '27
360 - 2019 GO BONDS						
Beginning Balance		**1,333,276**	**1,444**	**1,444**	**1,444**	**1,444**
Revenues and Other Fund Sources						
Revenue						
Interest		*4,318*	*0*	*0*	*0*	*0*
	Total	4,318	0	0	0	0
Total Revenues and Other Fund Sources		4,318	0	0	0	0
Total Funds Available		**1,337,594**	**1,444**	**1,444**	**1,444**	**1,444**
Expenditures and Uses						
Capital Projects & Equipment						
PUBLIC WORKS - INFRASTRUCTURE						
Unity Point Secondary Access	ECO21001	*(914)*	*0*	*0*	*0*	*0*
Creekside Estates Infrastructure	ECO21006	*(343,276)*	*0*	*0*	*0*	*0*
2020 ADA Sidewalk Repair	SDW20001	*(109,429)*	*0*	*0*	*0*	*0*
Sidewalk Gap Yr 2 - Fisher_Anson Elem	SDW20002	*(480,060)*	*0*	*0*	*0*	*0*
	Total	(933,679)	0	0	0	0
STREET IMPROVEMENT PROGRAM						
2020 Box Culvert Repairs	SMW20003	*(154,937)*	*0*	*0*	*0*	*0*
SMW21002 Boone St Intrstns (15th Ave/16th Ave)	SMW21002	*(1,444)*	*0*	*0*	*0*	*0*
18th Ave Viaduct	STR20004	*(246,090)*	*0*	*0*	*0*	*0*
	Total	(402,471)	0	0	0	0
Total Expenditures and Uses		(1,336,150)	0	0	0	0
Change in Fund Balance		(1,331,832)	0	0	0	0
Ending Balance		**1,444**	**1,444**	**1,444**	**1,444**	**1,444**

Source		FY '23	FY '24	FY '25	FY '26	FY '27
362 - 2020A GO Bond Projects						
Beginning Balance		**721,250**	**577,750**	**0**	**0**	**0**
Revenues and Other Fund Sources						
Revenue						
Interest on Investments		*6,500*	*0*	*0*	*0*	*0*
	Total	6,500	0	0	0	0
Total Revenues and Other Fund Sources		6,500	0	0	0	0
Total Funds Available		**727,750**	**577,750**	**0**	**0**	**0**
Expenditures and Uses						
Capital Projects & Equipment						
PUBLIC WORKS - INFRASTRUCTURE						
Railroad Quiet Zones	RR 001	*(150,000)*	*(577,750)*	*0*	*0*	*0*
	Total	(150,000)	(577,750)	0	0	0
Total Expenditures and Uses		(150,000)	(577,750)	0	0	0
Change in Fund Balance		(143,500)	(577,750)	0	0	0
Ending Balance		**577,750**	**0**	**0**	**0**	**0**

Source		FY '23	FY '24	FY '25	FY '26	FY '27
363- 2021 GO BOND						
Beginning Balance		**8,432,914**	**5,810,849**	**541,589**	**126,589**	**126,589**
Revenues and Other Fund Sources						
Revenue						
Grants		*25,000*	*0*	*0*	*0*	*0*
Interest		*160,000*	*80,000*	*5,000*	*0*	*0*
Water Works Contribution		*500,000*	*0*	*0*	*0*	*0*
	Total	685,000	80,000	5,000	0	0
Total Revenues and Other Fund Sources		685,000	80,000	5,000	0	0
Total Funds Available		**9,117,914**	**5,890,849**	**546,589**	**126,589**	**126,589**
Expenditures and Uses						
Capital Projects & Equipment						
CITY WIDE BUILDING MAINTENANCE						
Generator Replacement - PD/Fire	PDFD_A	*(5,000)*	*(15,000)*	*(420,000)*	*0*	*0*
	Total	(5,000)	(15,000)	(420,000)	0	0
PARK & RECREATION						
Kiwanis Park Improvements	22PR006	*(250,000)*	*0*	*0*	*0*	*0*
Farmer's Market Improvements	FrmrMrkt	*0*	*(50,000)*	*0*	*0*	*0*
Park 101 (101 West Main Street)	PRK101	*(100,000)*	*0*	*0*	*0*	*0*
	Total	(350,000)	(50,000)	0	0	0
PUBLIC WORKS - INFRASTRUCTURE						
Unity Point Secondary Access	ECO21001	*(5,796)*	*(7,000)*	*0*	*0*	*0*
Fire Intersection Imprvmnt High/6th St	Fire_A	*(35,000)*	*0*	*0*	*0*	*0*
Police-Fire - Remaining SWAP Funds for drive/sdwlk	PDFD_B	*(51,357)*	*0*	*0*	*0*	*0*
Sidewalk Gap Yr 2 - Fisher_Anson Elem	SDW20002	*(25,065)*	*0*	*0*	*0*	*0*
South Center St. Viaduct - Ph1_STR 21-002	STR21002	*(690,128)*	*(1,697,600)*	*0*	*0*	*0*
State Street Reconstruction	STR21004	*(1,531,320)*	*(2,368,124)*	*0*	*0*	*0*
	Total	(2,338,666)	(4,072,724)	0	0	0
STREET IMPROVEMENT PROGRAM						
2020 Box Culvert Repairs	SMW20003	*(179,478)*	*0*	*0*	*0*	*0*
SMW21002 Boone St Intrstns (15th Ave/16th Ave)	SMW21002	*(172,845)*	*0*	*0*	*0*	*0*
18th Ave Viaduct	STR20004	*(19,102)*	*0*	*0*	*0*	*0*
E Main St Reconstruction (5th Ave to 12th Ave)	STR22001	*(166,974)*	*(1,111,536)*	*0*	*0*	*0*
FY23 Street Patch Repairs - Labor In House	STR22501	*(75,000)*	*0*	*0*	*0*	*0*
FY24 Street Patch Repairs - Labor In House	STR23501	*0*	*(100,000)*	*0*	*0*	*0*
	Total	(613,399)	(1,211,536)	0	0	0
Total Expenditures and Uses		(3,307,065)	(5,349,260)	(420,000)	0	0

Source	FY '23	FY '24	FY '25	FY '26	FY '27
363- 2021 GO BOND					
Change in Fund Balance	(2,622,065)	(5,269,260)	(415,000)	0	0
Ending Balance	**5,810,849**	**541,589**	**126,589**	**126,589**	**126,589**

Source		FY '23	FY '24	FY '25	FY '26	FY '27
364- 2022 GO BOND						
Beginning Balance		**0**	**3,992,647**	**345,147**	**339,147**	**339,147**
Revenues and Other Fund Sources						
Revenue						
Bond premium net of issuance costs		*28,147*	*0*	*0*	*0*	*0*
Bond Proceeds		*9,555,000*	*0*	*0*	*0*	*0*
Interest		*80,000*	*80,000*	*0*	*0*	*0*
Trails Inc. Trailhead Donation		*200,000*	*0*	*0*	*0*	*0*
	Total	9,863,147	80,000	0	0	0
Total Revenues and Other Fund Sources		9,863,147	80,000	0	0	0
Total Funds Available		**9,863,147**	**4,072,647**	**345,147**	**339,147**	**339,147**
Expenditures and Uses						
Capital Projects & Equipment						
PARK & RECREATION						
Water Plaza (Linn Creek District)	23PR004	*(500,000)*	*0*	*0*	*0*	*0*
Riverview Park Improvements	23PR009	*(2,500,000)*	*0*	*0*	*0*	*0*
West End Park Improvements Phase II	23PR011	*(600,000)*	*0*	*0*	*0*	*0*
Trail Connection- Freedom Rock to Skate Park	TRL1	*(250,000)*	*0*	*0*	*0*	*0*
Linn Creek Trail Bridge	TRL2	*(700,000)*	*0*	*0*	*0*	*0*
River's Edge Trailhead	TRL2023	*(760,000)*	*0*	*0*	*0*	*0*
	Total	(5,310,000)	0	0	0	0
PUBLIC WORKS - INFRASTRUCTURE						
City Hall Parking Lot	PLT2023	*(20,000)*	*(370,000)*	*0*	*0*	*0*
Sidewalk Gap Yr 3 - Hogland	SDW23001	*(50,000)*	*(450,000)*	*0*	*0*	*0*
Pedestrian Alley - East State Street	SRF_SP_A	*0*	*(94,000)*	*(6,000)*	*0*	*0*
DIP Phase 2- East Main Street (3rd A-Cntr+Center2)	STR22002	*(490,500)*	*(163,500)*	*0*	*0*	*0*
	Total	(560,500)	(1,077,500)	(6,000)	0	0
STREET IMPROVEMENT PROGRAM						
E Church St - E of 18th Ave	SIP_F	*0*	*(100,000)*	*0*	*0*	*0*
Street Improvement Fund - PlaceHolder	SIP_X	*0*	*(86,536)*	*0*	*0*	*0*
E Main St Reconstruction (5th Ave to 12th Ave)	STR22001	*0*	*(2,463,464)*	*0*	*0*	*0*
	Total	0	(2,650,000)	0	0	0
Total Expenditures and Uses		(5,870,500)	(3,727,500)	(6,000)	0	0
Change in Fund Balance		3,992,647	(3,647,500)	(6,000)	0	0
Ending Balance		**3,992,647**	**345,147**	**339,147**	**339,147**	**339,147**

Source		FY '23	FY '24	FY '25	FY '26	FY '27
389- AMERICAN RESCUE PLAN						
Beginning Balance		**1,805,688**	**3,199,277**	**737,536**	**737,536**	**737,536**
Revenues and Other Fund Sources						
Revenue						
Federal Grant		*1,993,589*	*0*	*0*	*0*	*0*
	Total	1,993,589	0	0	0	0
Total Revenues and Other Fund Sources		1,993,589	0	0	0	0
Total Funds Available		**3,799,277**	**3,199,277**	**737,536**	**737,536**	**737,536**
Expenditures and Uses						
Capital Projects & Equipment						
PUBLIC WORKS - INFRASTRUCTURE						
Edgewood Extension	STR19003	*(600,000)*	*0*	*0*	*0*	*0*
State Street Reconstruction	STR21004	*0*	*(2,461,741)*	*0*	*0*	*0*
	Total	(600,000)	(2,461,741)	0	0	0
Total Expenditures and Uses		(600,000)	(2,461,741)	0	0	0
Change in Fund Balance		1,393,589	(2,461,741)	0	0	0
Ending Balance		**3,199,277**	**737,536**	**737,536**	**737,536**	**737,536**

Source		FY '23	FY '24	FY '25	FY '26	FY '27
395 - ECON DEV PROJ FUND						
Beginning Balance		**0**	**0**	**0**	**0**	**0**
Revenues and Other Fund Sources						
Revenue						
Reimbursement- Creekside		*181,209*	*0*	*0*	*0*	*0*
Reimbursement- S. 7th Ave		*92,700*	*0*	*0*	*0*	*0*
	Total	273,909	0	0	0	0
Total Revenues and Other Fund Sources		273,909	0	0	0	0
Total Funds Available		**273,909**	**0**	**0**	**0**	**0**
Expenditures and Uses						
Capital Projects & Equipment						
PUBLIC WORKS - INFRASTRUCTURE						
Creekside Estates Infrastructure	ECO21006	*(181,209)*	*0*	*0*	*0*	*0*
South 7th Ave. Extension	ECO22001	*(92,700)*	*0*	*0*	*0*	*0*
	Total	(273,909)	0	0	0	0
Total Expenditures and Uses		(273,909)	0	0	0	0
Change in Fund Balance		0	0	0	0	0
Ending Balance		**0**	**0**	**0**	**0**	**0**

Source		FY '23	FY '24	FY '25	FY '26	FY '27
612 - WPCP REVENUE FUND						
Beginning Balance		**0**	**0**	**0**	**0**	**0**
Revenues and Other Fund Sources						
USER FEES						
4433.000 SEWER RENTALS		*782,596*	*1,263,200*	*1,044,950*	*696,148*	*732,280*
	Total	782,596	1,263,200	1,044,950	696,148	732,280
Total Revenues and Other Fund Sources		782,596	1,263,200	1,044,950	696,148	732,280
Total Funds Available		**782,596**	**1,263,200**	**1,044,950**	**696,148**	**732,280**
Expenditures and Uses						
Capital Projects & Equipment						
ENGINEERING DIVISION						
Field Tablets	3504	*0*	*(3,000)*	*0*	*0*	*0*
Survey/Inspection Truck	E2131	*0*	*0*	*0*	*0*	*(9,000)*
Engineering - CAD/Computer Workstations	E2189	*(2,400)*	*0*	*0*	*(2,550)*	*0*
	Total	(2,400)	(3,000)	0	(2,550)	(9,000)
SAN & STRM SEWER DIVISIONS						
Air Compressor	SWR 5000 004	*0*	*0*	*(12,000)*	*0*	*0*
TV Transporter Truck	SWR 5000 008	*0*	*0*	*0*	*0*	*(60,000)*
Pole Camera	SWR 5000 022	*0*	*0*	*(12,000)*	*0*	*0*
Push Camera	SWR 5000 023	*0*	*(20,000)*	*0*	*0*	*0*
Pickup Truck - Superintendent	VEH 9000 002	*0*	*0*	*(27,000)*	*0*	*0*
Backhoe	VEH 9000 003	*(56,842)*	*0*	*0*	*0*	*0*
Jet Vacuum Truck	VEH 9000 012	*(278,267)*	*0*	*0*	*0*	*0*
Pickup Truck - Locate Vehicle	VEH 9000 017	*(21,000)*	*0*	*0*	*0*	*0*
	Total	(356,109)	(20,000)	(51,000)	0	(60,000)
SANITARY SEWER LIFT STATIONS						
PUMP #1 REPLACEMENT	LEN 3500 001	*0*	*0*	*(3,800)*	*0*	*0*
PUMP #2 REPLACEMENT	LEN 3500 002	*0*	*0*	*(3,800)*	*0*	*0*
SEAL, CAULK, & PAINT BLOCK	MAI 1000 001	*(8,000)*	*0*	*0*	*0*	*0*
PUMP #1 REPLACEMENT-E MAIN LIFT STATION	MAI 1000 002	*0*	*0*	*(30,000)*	*0*	*0*
PUMP #1 REBUILD	MAI 1000 003	*0*	*0*	*(3,000)*	*0*	*0*
PUMP #2 REPLACEMENT-E MAIN LIFT STATION	MAI 1000 004	*0*	*0*	*(30,000)*	*0*	*0*
PUMP #2 REBUILD	MAI 1000 005	*0*	*0*	*0*	*0*	*(3,000)*
TELEMETRY UPGRADE-E MAIN LIFT STATION	MAI 1000 007	*0*	*(25,000)*	*0*	*0*	*0*
LEVEL CONTROLLER	MAI 1000 008	*0*	*0*	*(2,100)*	*0*	*0*
ELECTRICAL PANEL MAINTENANCE	MAR 2000 005	*0*	*(8,000)*	*0*	*0*	*0*
SPARE PUMP	MAR 2000 008	*0*	*0*	*0*	*(3,200)*	*0*
LIFT STATION BLDG REPAIR	ROL 4000 009	*(50,000)*	*0*	*0*	*0*	*0*
PUMP #1 REPLACEMENT	SUM 6000 001	*0*	*(4,000)*	*0*	*0*	*0*
PUMP #2 REPLACEMENT	SUM 6000 003	*0*	*(4,000)*	*0*	*0*	*0*
REPLACE 50KW PORT. GENERATOR-SANITARY SEWERS	SWR 5000 002	*0*	*0*	*0*	*0*	*(75,000)*
PAINT, SEAL, CAULK, & PAINT ROOF-TURNER	TUR 7000 001	*0*	*0*	*0*	*(10,000)*	*0*

Source		FY '23	FY '24	FY '25	FY '26	FY '27
612 - WPCP REVENUE FUND						
LIFT STATI						
ELECTRICAL PANEL MAINTENANCE-TURNER LIFT STATION	TUR 7000 013	*0*	*0*	*0*	*(8,000)*	*0*
RADIO TELEMETRY SYSTEM-TURNER LIFT STATION	TUR 7000 014	*0*	*(18,000)*	*0*	*0*	*0*
SIPHON FLOW METER	TUR 7000 016	*0*	*0*	*0*	*(1,800)*	*0*
SIPHON WETWELL METER	TUR 7000 017	*0*	*0*	*0*	*(1,800)*	*0*
ACTUATOR/ WEIR GATE	TUR 7000 018	*0*	*0*	*0*	*(4,000)*	*0*
ACTUATOR/PLANT GATE	TUR 7000 019	*0*	*0*	*0*	*(4,000)*	*0*
PAINT INTERIOR	YMC 9500 001	*0*	*0*	*(4,950)*	*0*	*0*
ROOF REPLACEMENT	YMC 9500 002	*0*	*0*	*0*	*0*	*(5,000)*
PUMP #1 REPLACEMENT -YMCA LIFT STATION	YMC 9500 004	*(15,000)*	*0*	*0*	*0*	*0*
PUMP #2 REPLACEMENT-YMCA LIFT STATION	YMC 9500 006	*0*	*(15,000)*	*0*	*0*	*0*
PUMP #3 REPLACEMENT-YMCA LIFT STATION	YMC 9500 008	*0*	*(15,000)*	*0*	*0*	*0*
STANDBY GEN. REPLACEMENT-YMCA LIFT STATION	YMC 9500 011	*(50,000)*	*0*	*0*	*0*	*0*
	Total	(123,000)	(89,000)	(77,650)	(32,800)	(83,000)
UTILITY (ELEC/FACIL) DIVISION						
Repeater at High Street Tower (for radio coms)	UTIL_A	*0*	*0*	*0*	*0*	*(3,000)*
	Total	0	0	0	0	(3,000)
WPCP DIVISION						
REPLACE FLOORING (DOWN)-ADMINISTRATION BLDG	ADM 0300 001	*(9,000)*	*0*	*0*	*0*	*0*
AERATION BASIN MEMBRANES	ARB 0500 002	*(25,000)*	*0*	*0*	*0*	*0*
OVERHEAD DOOR -MAINTENANCE SHOP	BFP 0900 002	*0*	*0*	*0*	*0*	*(2,800)*
TEST GAS BALL	BGR 0700 001	*0*	*0*	*0*	*(15,000)*	*0*
BOILER #1-BOILER BLDG	BLR 1200 001	*0*	*0*	*0*	*0*	*(60,000)*
MEMBRANE ROOF REPLACEMENT-BOILER BLDG	BLR 1200 003	*0*	*(15,000)*	*0*	*0*	*0*
HWP #1 REPLACEMENT-BOILER BLDG	BLR 1200 010	*0*	*0*	*0*	*(15,000)*	*0*
HWP #2 REPLACEMENT - BOILER BLDG	BLR 1200 012	*0*	*0*	*0*	*(15,000)*	*0*
RE-ROOF - ENGINE BUILDING	CMP 1500 002	*0*	*(25,000)*	*0*	*0*	*0*
RAW WASTE PUMP #3 - COMPRESSOR BLDG	CMP 1500 014	*0*	*(15,000)*	*0*	*0*	*0*
HOFFMAN BLOWER #3 BEARINGS-COMP BLDG	CMP 1500 028	*0*	*0*	*0*	*(2,000)*	*0*
GENERATOR CONTROL REPLACEMENT-COMP BLDG	CMP 1500 033	*0*	*0*	*(180,000)*	*0*	*0*
NORTH TUNNEL MLSS XFER PUMP-COMP BLDG	CMP 1500 042	*0*	*0*	*0*	*(10,000)*	*0*
AIR COMPRESSOR #1, #2 REPLACEMENT-SUB BASEMENT	CMP 1500 044	*0*	*(35,000)*	*0*	*0*	*0*
MAU - 1- COMP BLDG	CMP 1500 049	*0*	*(70,000)*	*0*	*0*	*0*
MAU-1 REBUILD-COMP BLDG	CMP 1500 050	*0*	*(25,000)*	*0*	*0*	*0*
FLUID COOLER-COMP BLDG	CMP 1500 051	*0*	*0*	*(25,000)*	*0*	*0*
CONCENTRATE DRIVE (EAST)-& (WEST) CONCENTRATE BLDG	CNC 1700 001	*0*	*(30,000)*	*0*	*0*	*0*
RE-ROOF DAF-MAINT SHOP BLDG	DAF 1900 001	*0*	*(20,000)*	*0*	*0*	*0*
DAF #1 REPLACE w/ RDT-DAF BLDG	DAF 1900 013	*0*	*(200,000)*	*0*	*0*	*0*

Source		FY '23	FY '24	FY '25	FY '26	FY '27
612 - WPCP REVENUE FUND						
DAF #2 REPLACE w/ RDT-DAF BLDG	DAF 1900 014	0	(200,000)	0	0	0
DAF #1 INLET FLOW METER-DAF BLDG	DAF 1900 015	0	0	0	0	(3,120)
DAF #1 RECYCLE FLOW METER-DAF BLDG	DAF 1900 016	0	0	0	0	(3,120)
DAF #2 INLET FLOW METER-DAF BLDG	DAF 1900 018	0	0	0	0	(3,120)
DAF #2 RECYCLE FLOW METER-DAF BLDG	DAF 1900 019	0	0	0	0	(3,120)
AIR DIA. PUMP #1 REPLACEMENT-DIG CONTR BLDG	DCB 2100 014	0	(20,000)	0	0	0
AIR DIA. PUMP #2 REPLACEMENT-DIG CONTR BLDG	DCB 2100 015	0	(20,000)	0	0	0
GAS COMPRESSOR #2 REBUILD-DIG CONTR BLDG	DCB 2100 019	0	0	0	(9,000)	0
PIPE INSULATION-DIG CONTR BLDG	DCB 2100 028	(8,000)	0	0	0	0
MAU - 2 (CONCENTRATE)-DIG CONTR BLDG	DCB 2100 031	0	0	(30,000)	0	0
MAU-2 (CONCENTRATE) REBUILD-DIG CONTR BLDG	DCB 2100 032	0	(25,000)	0	0	0
WEMCO PUMP #2 (LOWER LEVEL)-DIG CONTR BLDG	DCB 2100 033	0	0	(20,000)	0	0
DAY TANK PROPELLER MIXER-DIG CONTR BLDG	DCB 2100 035	0	0	(13,000)	0	0
DIG FEED PUMP #1-DIG CONTR BLDG	DCB 2100 037	0	0	(10,000)	0	0
DIG FEED PUMP #2 REPLACEMENT-DIG CONTR BLDG	DCB 2100 039	0	0	(10,000)	0	0
DIG FEED PUMP GRINDER-DIG CONTR BLDG	DCB 2100 041	0	0	(8,000)	0	0
DIG TRANSFER PUMP #1 REPLACEME-DIG CONTR BLDG	DCB 2100 042	0	(10,000)	0	0	0
DIG TRANSER PUMP #2 REPLACEME-DIG CONTR BLDG	DCB 2100 044	0	0	(10,000)	0	0
DIG TRANS PUMP GRINDER REPLACE-DOG CONTR BLDG	DCB 2100 047	0	(8,000)	0	0	0
SPARE GRINDER-DIG CONTR BLDG	DCB 2100 049	0	0	(8,000)	0	0
GAS COMPRESSOR #1 SEPERATOR-DIG CONTR BLDG	DCB 2100 052	0	0	0	(4,750)	0
GAS COMPRESSOR #2 SEPERATOR-DIG CONTR BLDG	DCB 2100 053	0	0	0	(4,750)	0
#1 WEMCO PUMP-DIG CONTR BLDG	DCB 2100 054	0	(35,000)	0	0	0
WEMCO #3-DIG CONTR BLDG	DCB 2100 056	0	(30,000)	0	0	0
MEMBRANE ROOF REPLACEMENT-DIG #2	DG2 2002 001	0	0	(38,000)	0	0
PAINT LID-DIG #2	DG2 2002 003	0	0	(32,000)	0	0
CLEAN DIGESTER-DIG #2	DG2 2002 011	0	0	0	0	(20,000)
REBUILD DRIVE - FINAL,#3	FCL 3100 002	0	0	0	(15,000)	0
F.E.B. VALVE REBUILD & ACUATOR REPLACEMENT	FEB 2900 002	0	0	0	(5,050)	0
GLYCOL VENTILATION SYSTEM- LAB BLDG	LAB 3700 005	0	0	0	0	(7,000)
HEATING & COOLING -LAB BLDG	LAB 3700 006	0	(12,000)	0	0	0
INDUSTRIAL PRETREAT SOFTWARE - LAB BLDG	LAB 3700 024	(5,000)	0	0	0	0
60" LAB HOOD LAB BLDG	LAB 3700 027	0	(7,000)	0	0	0
KJELDAHL DISTILLATION UNIT	LAB 3700 031	0	0	(20,000)	0	0
REBUILD #1,2,3 PRIMARY CLARIFIER	PCL 4900 002	0	0	0	(60,000)	0

Source		FY '23	FY '24	FY '25	FY '26	FY '27
612 - WPCP REVENUE FUND						
REPLACE PRIMARY #4-5 RETURN RAILS	PCL 4900 003	0	0	0	0	(26,000)
REBUILD #4, 5 PRIMARY CLARIFIER	PCL 4900 007	0	0	0	(60,000)	0
PRIMARY VALVE ACTUATORS (5 per/year)-PRIMARIES	PCL 4900 011	(35,000)	0	0	0	0
PRIMARY CLARIFIER#1 WEIR REPLACEMENT	PCL 4900 013	0	0	(40,000)	0	0
PRIMARY CLARIFIER #2 WEIR REPLACEMENT	PCL 4900 015	0	0	(40,000)	0	0
PRIMARY CLARIFIER #3 WEIR REPLACEMENT	PCL 4900 016	0	0	(40,000)	0	0
PUMP #4 REBUILD-PRELIM BLDG	PLM 4700 017	0	0	(25,000)	0	0
PUMP #5 REBUILD-PRELIM BLD	PLM 4700 019	0	0	(25,000)	0	0
REPLACE GRIT SNAIL BELT-PRELIM BLDG	PLM 4700 021	(11,100)	0	0	0	0
VFD REPLACEMENT(4,5,)-PRELIM BLDG	PLM 4700 025	0	0	0	(12,000)	0
VFD REPLACEMENT (1,2,3&6)-PRELIM BLDG	PLM 4700 028	0	0	0	(24,000)	0
VERT TURBINE PUMP #1,#2,#3,#6 REBUILD-PRELIM BLDG	PLM 4700 036	0	(60,000)	0	0	0
VERTICAL TURBINE PUMP#2 REPLAC-PRELIM BLDG	PLM 4700 037	0	0	0	0	(50,000)
VERTICAL TURBINE PUMP #3 REPLA-PRELIM BLDG	PLM 4700 039	0	0	0	0	(50,000)
VERTICAL TURBINE PUMP #6 REPLA-PRELIM BLDG	PLM 4700 041	0	0	0	0	(50,000)
PRELIM VALVE ACTUATOR TO FEB	PLM 4700 051	0	0	(10,000)	0	0
PLANT SECURITY-PLANT	PLT 4500 001	0	0	0	0	(50,000)
VALVE EXERCISER-PLANT	PLT 4500 005	0	(8,000)	0	0	0
RIVER GAUGE STATION-TELEMETRY	PLT 4500 018	(9,000)	0	0	0	0
JBS LAGOON-TELEMETRY	PLT 4500 020	0	0	0	(15,000)	0
MCC ELECTRICAL MAINTENANCE-PLANT	PLT 4500 021	(30,000)	(20,000)	(20,000)	(20,000)	(20,000)
CAPACITOR BANK PROJ	PLT 4500 151	(85,000)	0	0	0	0
RE-ROOF BUILDING-SBR BLDG	SBB 1100 001	0	0	0	(9,131)	0
RAW PUMP #2 REPLACEMENT-SBR BLDG	SBB 1100 012	0	0	0	(25,000)	0
EFFLUENT WATER STRAINER-SBR BLDG	SBB 1100 018	0	0	0	0	0
GAS MONITOR-SBR BLDG	SBB 1100 021	0	0	(6,000)	0	0
SUPERVISORY CONTROLS/COMPUTER-SBR BLDG	SBB 1100 023	(20,000)	0	0	0	0
SBR Blowe-SBR BLDG	SBB 1100 031	0	(50,000)	0	0	0
REPLACE SBR MIXER #1-SBR TANK#1	SBR 5500 002	(25,000)	0	0	0	0
REPLACE SBR DECANTOR #1-SBR TANK #1	SBR 5500 006	0	(38,000)	0	0	0
REPLACE SBR DECANTOR #2-SBR TANK #2	SBR 5500 007	0	(38,000)	0	0	0
SBR AERATION SYSTEM REPLACEMENT	SBR 5500 035	0	0	(200,000)	0	0
MCC J&K REPLACEMENT - SBR	SBR 5500 060	0	0	(100,000)	(100,000)	0
WASTING PUMP #1 REPLACEMENT-SECONDARY CONTR BLDG	SCB 5300 010	0	(5,700)	0	0	0
WASTING PUMP #2 REPLACEMENT-SECONDARY CONTR BLDG	SCB 5300 012	0	(5,700)	0	0	0
JET PUMP #1A,#2A,#3A VFD-SECONDARY CONTR BLDG	SCB 5300 023	0	0	0	(36,000)	0
JET PUMP #1B VFD-SECONDARY CONTR BLDG	SCB 5300 024	0	(12,000)	0	0	0

Source		FY '23	FY '24	FY '25	FY '26	FY '27
612 - WPCP REVENUE FUND						
REPLACE JET PUMP/MOTOR #1A	SCB 5300 16	*0*	*0*	*0*	*(75,000)*	*0*
REPLACE JET PUMP/MOTOR #1B	SCB 5300 17	*0*	*0*	*0*	*0*	*(75,000)*
REPLACE JET PUMP/MOTOR #2A	SCB 5300 18	*0*	*0*	*0*	*0*	*(75,000)*
REPLACE JET PUMP/MOTOR #2B	SCB 5300 19	*0*	*0*	*0*	*0*	*(75,000)*
REPLACE JET PUMP/MOTOR #3A	SCB 5300 20	*0*	*0*	*0*	*(75,000)*	*0*
REPLACE JET PUMP/MOTOR #3B	SCB 5300 21	*0*	*(75,000)*	*0*	*0*	*0*
JET PUMP # 3B VFD-SECONDARY CONTRO BLDG	SCB 5300 29A	*0*	*(12,000)*	*0*	*0*	*0*
SLUDGE TANK #5 -MOORING CABLES	SH5 5900 002	*0*	*0*	*0*	*0*	*(2,000)*
SLUDGE TANK #6 MOORING CABLES	SH6 5900 005	*0*	*0*	*0*	*0*	*(2,000)*
AERATION MIXER-LIME SILO	SLO 4000 004	*0*	*(10,000)*	*0*	*0*	*0*
RE-ROOF -SLUDGE TRANSFER BLDG	STP 6100 001	*0*	*0*	*0*	*(1,461)*	*0*
SLUDGE FLOW METER-SLUDGE TRANSFER BLDG	STP 6100 006	*0*	*(8,500)*	*0*	*0*	*0*
RE-ROOF UV DISINFECTION BLDG	UVB 6900 001	*0*	*0*	*0*	*(1,656)*	*0*
FINAL EFFLUENT SS ANALYZER-UV CHANNEL	UVC 7100 002	*0*	*0*	*0*	*(8,000)*	*0*
PICKUP 1/2 TON ADMIN-VEHICLE	VEH 8100 003	*(38,987)*	*0*	*0*	*0*	*0*
PICKUP 1/2 TON-VEHICLE	VEH 8100 004	*0*	*0*	*0*	*(20,000)*	*0*
PICKUP 3/4 TON-VEHICLE	VEH 8100 009	*0*	*0*	*0*	*(23,000)*	*0*
WASTE HOLDING PUMP #2	WHT 8800 001	*0*	*(6,300)*	*0*	*0*	*0*
WASTE HOLDING PUMP #1	WHT 8800 002	*0*	*0*	*(6,300)*	*0*	*0*
	Total	(301,087)	(1,151,200)	(916,300)	(660,798)	(577,280)
Total Expenditures and Uses		(782,596)	(1,263,200)	(1,044,950)	(696,148)	(732,280)
Change in Fund Balance		0	0	0	0	0
Ending Balance		**0**	**0**	**0**	**0**	**0**

Source		FY '23	FY '24	FY '25	FY '26	FY '27
615 - WPCP IMPROVMNTS						
Beginning Balance		**0**	**0**	**0**	**0**	**0**
Revenues and Other Fund Sources						
Revenue						
Sewer User Fees		*0*	*447,500*	*1,719,680*	*286,975*	*0*
Sponsored Project Funding		*0*	*489,500*	*823,000*	*0*	*0*
State Revolving Fund Loan		*7,443,455*	*4,305,550*	*1,375,995*	*0*	*0*
	Total	7,443,455	5,242,550	3,918,675	286,975	0
Total Revenues and Other Fund Sources		7,443,455	5,242,550	3,918,675	286,975	0
Total Funds Available		**7,443,455**	**5,242,550**	**3,918,675**	**286,975**	**0**
Expenditures and Uses						
Capital Projects & Equipment						
PUBLIC WORKS - INFRASTRUCTURE						
City Hall Parking Lot	PLT2023	*0*	*(489,500)*	*(573,000)*	*0*	*0*
SAN21001 Sanitary Sewer CIPP Project	SAN21001	*(4,548,255)*	*(507,450)*	*0*	*0*	*0*
Pedestrian Alley - East State Street	SRF_SP_A	*0*	*0*	*(250,000)*	*0*	*0*
	Total	(4,548,255)	(996,950)	(823,000)	0	0
WPCP DIVISION						
SUPERVISORY CONTROL UPGRADE-BOILER BLDG	BLR 1200 015	*0*	*(15,000)*	*0*	*0*	*0*
MASTER RADIO - RTU-COMP BLDG	CMP 1500 046	*0*	*(25,000)*	*0*	*0*	*0*
SUPERVISORY CONTROL UPGRADE-COMP BLDG	CMP 1500 055	*0*	*(15,000)*	*0*	*0*	*0*
SUPERVISORY CONTROL UPGRADE-DAF BLDG	DAF 1900 025	*0*	*(15,000)*	*0*	*0*	*0*
DIG#3 - MIXER #1 REBUILD	DG3 2003 005	*0*	*(25,000)*	*0*	*0*	*0*
SCADA WONDERWARE SOFTWARE UPGRADE- LAB BLDG	LAB 3700 025	*0*	*(160,000)*	*0*	*0*	*0*
MAU -3 REPLACEMENT-PRELIM BLDG	PLM 4700 032	*0*	*(40,000)*	*0*	*0*	*0*
SUPERVISORY CONTROL UPGRADE-PRELIM BLDG	PLM 4700 034	*0*	*(25,000)*	*0*	*0*	*0*
HEADWORKS EQUIP REPL PROJECT	PLM 4700 067	*(2,895,200)*	*(3,798,100)*	*(3,095,675)*	*(286,975)*	*0*
INDUSTRIAL PC REPLACEMENT-ALL	PLT 4500 012	*0*	*(100,000)*	*0*	*0*	*0*
SUPERVISORY CONTROL UPGRADE-SECONDARY CONTRO BLDG	SCB 5300 032	*0*	*(15,000)*	*0*	*0*	*0*
INDUSTRIAL PC UPGRADE-SECONDARY CONTR BLDG	SCB 5300 033	*0*	*(12,500)*	*0*	*0*	*0*
	Total	(2,895,200)	(4,245,600)	(3,095,675)	(286,975)	0
Total Expenditures and Uses		(7,443,455)	(5,242,550)	(3,918,675)	(286,975)	0
Change in Fund Balance		0	0	0	0	0
Ending Balance		**0**	**0**	**0**	**0**	**0**

Source		FY '23	FY '24	FY '25	FY '26	FY '27
616 - SAN SWR REHAB						
Beginning Balance		**0**	**0**	**0**	**0**	**0**
Revenues and Other Fund Sources						
User Fees						
4433.000 SEWER RENTALS		*74,610*	*715,900*	*1,766,400*	*441,600*	*0*
	Total	74,610	715,900	1,766,400	441,600	0
Total Revenues and Other Fund Sources		74,610	715,900	1,766,400	441,600	0
Total Funds Available		**74,610**	**715,900**	**1,766,400**	**441,600**	**0**
Expenditures and Uses						
Capital Projects & Equipment						
PUBLIC WORKS - INFRASTRUCTURE						
South 7th Ave. Extension	ECO22001	*(74,610)*	*0*	*0*	*0*	*0*
Sanitary Sewer Manhole Rehab Project	SAN_A	*0*	*(192,000)*	*(1,766,400)*	*(441,600)*	*0*
State Street Reconstruction	STR21004	*0*	*(523,900)*	*0*	*0*	*0*
	Total	(74,610)	(715,900)	(1,766,400)	(441,600)	0
Total Expenditures and Uses		(74,610)	(715,900)	(1,766,400)	(441,600)	0
Change in Fund Balance		0	0	0	0	0
Ending Balance		**0**	**0**	**0**	**0**	**0**

Source		FY '23	FY '24	FY '25	FY '26	FY '27
690 - TRANSIT						
Beginning Balance		**638,327**	**552,327**	**517,327**	**376,477**	**180,787**
Revenues and Other Fund Sources						
Revenue						
Federal Grant		*0*	*0*	*0*	*1,108,910*	*0*
Federal Grant (85% Bus Purchase)		*0*	*0*	*458,150*	*0*	*0*
Federal Grant (TAPCO Software)		*0*	*18,000*	*0*	*0*	*0*
	Total	0	18,000	458,150	1,108,910	0
Total Revenues and Other Fund Sources		0	18,000	458,150	1,108,910	0
Total Funds Available		**638,327**	**570,327**	**975,477**	**1,485,387**	**180,787**
Expenditures and Uses						
Capital Projects & Equipment						
CITY WIDE BUILDING MAINTENANCE						
Wash Bay Renovations	PWB_A	*0*	*(25,000)*	*0*	*0*	*0*
	Total	0	(25,000)	0	0	0
TRANSIT DIVISION						
Transit Signs & Benches	F1000	*0*	*(10,000)*	*0*	*(10,000)*	*0*
Bus Lift - Post System	TRST_E_A	*0*	*0*	*(60,000)*	*0*	*0*
Taptco Software and Training	TRST_T_A	*0*	*(18,000)*	*0*	*0*	*0*
New Bus - Replace #011	TRST_V_A	*0*	*0*	*0*	*(647,300)*	*0*
New Bus - Replace #013	TRST_V_B	*0*	*0*	*0*	*(647,300)*	*0*
Engine Replacement on 2010 Gillig	TRST_V_C	*(65,000)*	*0*	*0*	*0*	*0*
New Bus - Replace #109	V3410	*0*	*0*	*(539,000)*	*0*	*0*
Shop Truck- Used Transfer from P&R	V3419	*(6,000)*	*0*	*0*	*0*	*0*
Two Used Cy Ride Buses - Replace #991	V3420	*(5,000)*	*0*	*0*	*0*	*0*
Two Used LightDuty Chauffer Buses	V3421	*(10,000)*	*0*	*0*	*0*	*0*
	Total	(86,000)	(28,000)	(599,000)	(1,304,600)	0
Total Expenditures and Uses		(86,000)	(53,000)	(599,000)	(1,304,600)	0
Change in Fund Balance		(86,000)	(35,000)	(140,850)	(195,690)	0
Ending Balance		**552,327**	**517,327**	**376,477**	**180,787**	**180,787**

Source		FY '23	FY '24	FY '25	FY '26	FY '27
740/741 - STORM WATER						
Beginning Balance		**1,340,270**	**0**	**0**	**0**	**0**
Revenues and Other Fund Sources						
Revenue						
4427.000 Storm Water Charges		*347,100*	*238,000*	*104,000*	*61,700*	*198,000*
	Total	347,100	238,000	104,000	61,700	198,000
Total Revenues and Other Fund Sources		347,100	238,000	104,000	61,700	198,000
Total Funds Available		**1,687,370**	**238,000**	**104,000**	**61,700**	**198,000**
Expenditures and Uses						
Capital Projects & Equipment						
ENGINEERING DIVISION						
Field Tablets	3504	*0*	*(2,000)*	*0*	*0*	*0*
Survey/Inspection Truck	E2131	*0*	*0*	*0*	*0*	*(6,000)*
Engineering - CAD/Computer Workstations	E2189	*(1,600)*	*0*	*0*	*(1,700)*	*0*
Storm Water Coordinator Truck/SUV	ENG_A	*0*	*(20,000)*	*0*	*0*	*0*
	Total	(1,600)	(22,000)	0	(1,700)	(6,000)
PUBLIC WORKS - INFRASTRUCTURE						
Median Improvements- Hwy 14 Olive to La Frentz	2019DOTHWY14	*(142,850)*	*0*	*0*	*0*	*0*
South 7th Ave. Extension	ECO22001	*(236,405)*	*0*	*0*	*0*	*0*
	Total	(379,255)	0	0	0	0
SAN & STRM SEWER DIVISIONS						
Air Compressor	SWR 5000 004	*0*	*0*	*(8,000)*	*0*	*0*
TV Transporter Truck	SWR 5000 008	*0*	*0*	*0*	*0*	*(40,000)*
Pole Camera	SWR 5000 022	*0*	*0*	*(8,000)*	*0*	*0*
Pickup Truck - Superintendent	VEH 9000 002	*0*	*0*	*(18,000)*	*0*	*0*
Backhoe	VEH 9000 003	*(37,895)*	*0*	*0*	*0*	*0*
Jet Vacuum Truck	VEH 9000 012	*(185,512)*	*0*	*0*	*0*	*0*
Pickup Truck - Locate Vehicle	VEH 9000 017	*(14,000)*	*0*	*0*	*0*	*0*
	Total	(237,407)	0	(34,000)	0	(40,000)
STORM SEWER LIFT STATIONS						
MAJ REBUILD DISCHARG PUMP # 1-18TH AVE STATION	18A 5910 001	*0*	*(50,000)*	*0*	*0*	*0*
TELEMETRY-18TH AVE STATION	18A 5910 011	*0*	*(50,000)*	*0*	*0*	*0*
REPLACE DRAIN MH PUMP # 1-18TH AVE STATION	18A 5910 012	*0*	*0*	*(10,000)*	*0*	*0*
REPLACE DRAIN MH PUMP # 2-18TH AVE STATION	18A 5910 013	*0*	*0*	*(10,000)*	*0*	*0*
SEAL, CAULK & PAINT-18TH AVE STATION	18A 5910 014	*(10,000)*	*0*	*0*	*0*	*0*
AIR CONDITIONING UNIT-1 NORTH	18A 5910 018	*0*	*(8,000)*	*0*	*0*	*0*
AIR CONDITIONING UNIT-2 SOUTH	18A 5910 019	*0*	*(8,000)*	*0*	*0*	*0*
WET WELL CLEANING	18A 5910 020	*0*	*(50,000)*	*0*	*0*	*0*
SEAL, CAULK, & PAINT ROOF	RIV 5900 001	*(4,000)*	*0*	*0*	*0*	*0*
PUMP #2 REBUILD MOTOR	RIV 5900 007	*(10,000)*	*0*	*0*	*0*	*0*

Source		FY '23	FY '24	FY '25	FY '26	FY '27
740/741 - STORM WATER						
STANDBY GENSET REBUILD	RIV 5900 033	*0*	*0*	*0*	*(10,000)*	*0*
REPLACE 250KW GENERATOR-SEWER	SWR 5000 012	*0*	*0*	*0*	*0*	*(100,000)*
	Total	(24,000)	(166,000)	(20,000)	(10,000)	(100,000)
STORM WATER - INFRASTRUCTURE						
SMW17001 4th St/Meadow Ln. Storm Sewer	SMW17001	*(995,108)*	*0*	*0*	*0*	*0*
STORM WATER EMERGENCY REPAIRS	STM SOS	*(50,000)*	*(50,000)*	*(50,000)*	*(50,000)*	*(50,000)*
	Total	(1,045,108)	(50,000)	(50,000)	(50,000)	(50,000)
UTILITY (ELEC/FACIL) DIVISION						
Repeater at High Street Tower (for radio coms)	UTIL_A	*0*	*0*	*0*	*0*	*(2,000)*
	Total	0	0	0	0	(2,000)
Total Expenditures and Uses		(1,687,370)	(238,000)	(104,000)	(61,700)	(198,000)
Change in Fund Balance		(1,340,270)	0	0	0	0
Ending Balance		**0**	**0**	**0**	**0**	**0**

Source		FY '23	FY '24	FY '25	FY '26	FY '27
750 - COMPOST						
Beginning Balance		**139,212**	**49,212**	**49,212**	**(788)**	**0**
Revenues and Other Fund Sources						
Revenue						
USER FEES		*0*	*0*	*0*	*150,788*	*0*
	Total	0	0	0	150,788	0
Total Revenues and Other Fund Sources		0	0	0	150,788	0
Total Funds Available		**139,212**	**49,212**	**49,212**	**150,000**	**0**
Expenditures and Uses						
Capital Projects & Equipment						
COMPOST DIVISION						
Safety Barrier betwn Compost & Edgewood Retention	COM_A	*0*	*0*	*(50,000)*	*0*	*0*
Vibratory Screen	E2192	*0*	*0*	*0*	*(150,000)*	*0*
Compost Turner	E2196	*(90,000)*	*0*	*0*	*0*	*0*
	Total	(90,000)	0	(50,000)	(150,000)	0
Total Expenditures and Uses		(90,000)	0	(50,000)	(150,000)	0
Change in Fund Balance		(90,000)	0	(50,000)	788	0
Ending Balance		**49,212**	**49,212**	**(788)**	**0**	**0**

City Capital Plan Equipment Replacment

FY '23 *thru* FY '27

City of Marshalltown, Iowa

Department AIRPORT
Contact Heather Thomas

Project # **AIR0002**
Project Name **Sealing Runway Materials (Labor from Street Dept)**

Type Maintenance
Useful Life 5 years
Category 460770 AIRPORT PROJECT-

Division AIRPORT
Object
Location

Priority Critical
Status Active
Total Project Cost: **$10,000**

Description

Seal cracks/joints on runway at airport. Will use City staff for labor. Cost shown is estimate on materials only as a place holder.

UPATE 12/2022 - Plans were to do it in FY22, this has been delayed to FY23. Had been shown in FY22 as Fund 001.2080

Engineer (CGA) recommendation of how to seal was not acceptable to Marshalltown Aviation. Currently awaiting new airport consultant selection to review the cracks and provide recommendation on best way to band-aid them until the upcoming runway rehabilitation projects.

Justification

Expenditures	FY '23	FY '24	FY '25	FY '26	FY '27	Total
Maintenance	10,000					10,000
Total	**10,000**					**10,000**

Funding Sources	FY '23	FY '24	FY '25	FY '26	FY '27	Total
030 - CIP FUND	10,000					10,000
Total	**10,000**					**10,000**

Budget Impact/Other

City Capital Plan Equipment Replacment

FY '23 *thru* FY '27

City of Marshalltown, Iowa

Department AIRPORT
Contact Heather Thomas

Project # ARP_A
Project Name CIP Planning Study

Type Unassigned
Useful Life 10 years
Category 0012080 GEN'L-AIRPORT
Priority Very Important
Status Active
Total Project Cost: $50,000

Division AIRPORT
Object
Location

Description

The consultants that have put together the rehabilitation plans for the runways that are programmed in the next 5+ years will not be a part of this project moving forward. We desire to have consultants review runway condition and put together scope of work needed and associated costs for these two major upcoming projects in FY26. There has been mention of needs for airfield lighting improvements and fueling systems that are currently not shown in any CIP capacity. This planning will include a review of all of the project's shown in the 5-year CIP and a brief look at 6-10 year CIP needs to confirm if they are able to wait that long. Reprioritization may be needed. We desire to have this study completed as soon as financially feasible after consultant selection is completed. For budgetary purposes, we are showing $ 50,000 in FY24.

There are annual documents, planning efforts, and coordination with FAA/DOT needed that without other projects going on that these have been included with in the past will require a separate project.

Justification

Expenditures	FY '23	FY '24	FY '25	FY '26	FY '27	Total
Planning & Design Engineering		50,000				50,000
Total		**50,000**				**50,000**

Funding Sources	FY '23	FY '24	FY '25	FY '26	FY '27	Total
030 - CIP FUND		50,000				50,000
Total		**50,000**				**50,000**

Budget Impact/Other

City Capital Plan Equipment Replacment

FY '23 *thru* FY '27

City of Marshalltown, Iowa

Department AIRPORT
Contact Heather Thomas

Project # ARP_B
Project Name Sewer Phase W - Septic Tank / Leachfield Replace

Type Maintenance
Useful Life 30 years
Category 0012080 GEN'L-AIRPORT
Priority Important
Status Active
Total Project Cost: $30,000

Division AIRPORT
Object
Location

Description

One project that has come to light during 2022 is the need to address sanitary waste out there– We had hoped this would be a relatively small item. However, as we have been working on the terminal project, we've investigated further and we have more serious issues that need addressed.

The existing treatment includes conveyance sewers, a septic tank, and lateral lines. We have attempted to televise conveyance sewers and have not been able to run a camera through as we have been stopped at two places that are impassable and will require a point repair under the existing pavement to address.

The septic tank lid has now collapsed and a metal plate is temporarily placed on top for safety. The lateral lines are plugged and not accessible.

The 24-hour restroom sewer line does not get to the septic system currently - so that project has been put on hold.

While additional investigation is needed, we've conceptually put together a $235,000 estimate if we were to perform the sanitary sewer point repairs, replace the septic/secondary treatment, and tie-in a new 24-hour restroom. This is what we submitted for federal AIP; however, learned that there would be no AIP or BIL funding is able to cover this type of project. We have completed additional analysis and believe we can

Therefore, we have phased this project into the following:
Phase W – Septic
$ 30,000
Phase X – Sewer Point Repairs & Connection of 24-Hour Restroom Hangar
$ 91,500
Phase Y – Lining Orangeburg Pipe under Pavement
$ 50,000
Phase Z – 24 Hour Restroom
$ 20,000

01/16/23 - Phase W pushed from FY24 to FY25 due to Fund 031 budgetting

Justification

Expenditures	FY '23	FY '24	FY '25	FY '26	FY '27	Total
Construction			30,000			30,000
Total			**30,000**			**30,000**

Funding Sources	FY '23	FY '24	FY '25	FY '26	FY '27	Total
031 - BUILDING MAINTENANCE			30,000			30,000
Total			**30,000**			**30,000**

Budget Impact/Other

POSSIBLE FRANCHISE FEE PROJECT

City Capital Plan Equipment Replacment

FY '23 *thru* FY '27

City of Marshalltown, Iowa

Department AIRPORT
Contact Heather Thomas

Project # ARP_C
Project Name Rehab - Taxiway 12/30 Pavement

Type Maintenance
Useful Life 20 years
Category 0012080 GEN'L-AIRPORT

Division AIRPORT
Object
Location

Priority Important
Status Active
Total Project Cost: **$2,660,000**

Description

Pavement Rehabilitation – Taxiways – This is a major need of the airport and is only shown as late in the CIP as it is due to available funding. The joints are in need of significant work. Attempts to seal the joints have not been successful due to the size of the voids under the joint – the sealant isn't able to fill the void. Evaluation of use a backer rod or other material before joint sealant was reviewed, but not cost effective with the a much-needed rehabilitation project just a few years out. The estimate shown in last year's CIP was not updated from the previous year and there has been significant cost increases in these projects since the start of the pandemic. To accommodate these multi-year increases, we are estimating a 40% project increase since these estimates were previously prepared by CGA. Again, we plan to utilize the CIP Planning Study to provide better estimates in the scope and cost of this project in FY24 to aid in planning for FY26. A 40% increase results in total project cost of $2,660,000, as we are now showing in our CIP.

Justification

Expenditures	FY '23	FY '24	FY '25	FY '26	FY '27	Total
Construction				2,660,000		2,660,000
Total				**2,660,000**		**2,660,000**

Funding Sources	FY '23	FY '24	FY '25	FY '26	FY '27	Total
312 - AIRPORT PROJECTS				2,394,000		2,394,000
353 - CAPITAL PROJECTS				266,000		266,000
Total				**2,660,000**		**2,660,000**

Budget Impact/Other

City Capital Plan Equipment Replacment

FY '23 *thru* FY '27

City of Marshalltown, Iowa

Department AIRPORT
Contact Heather Thomas

Project # ARP_D
Project Name Rehab - Runway 18/36 Pavement

Type Improvement
Useful Life 20 years
Category 460770 AIRPORT PROJECT-

Division AIRPORT
Object 5781.300 LAND IMPROVEME
Priority Critical
Location
Status Active
Total Project Cost: **$1,820,000**

Description

Rehab Runway 18/36 - This is a major need of the airport and is only shown as late in the CIP as it is due to available funding. The joints are in need of significant work. Attempts to seal the joints have not been successful due to the size of the voids under the joint – the sealant isn't able to fill the void. Evaluation of use a backer rod or other material before joint sealant was reviewed, but not cost effective with the a much-needed rehabilitation project just a few years out. The estimate shown in last year's CIP was not updated from the previous year and there has been significant cost increases in these projects since the start of the pandemic. To accommodate these multi-year increases, we are estimating a 40% project increase since these estimates were previously prepared by CGA. Again, we plan to utilize the CIP Planning Study to provide better estimates in the scope and cost of this project in FY24 to aid in planning for FY26. There has been discussion as to whether runway 18/36 rehab is needed more or 18/36. This will be evaluated in the CIP Planning Study. We may need a joint sealing/repair project as a temporary measure until the runway rehab can be completed. A 40% increase results in total project cost of $1,820,000, as we are now showing in our CIP.

Justification

Expenditures	FY '23	FY '24	FY '25	FY '26	FY '27	Total
Construction				1,820,000		1,820,000
Total				**1,820,000**		**1,820,000**

Funding Sources	FY '23	FY '24	FY '25	FY '26	FY '27	Total
312 - AIRPORT PROJECTS				1,638,000		1,638,000
353 - CAPITAL PROJECTS				182,000		182,000
Total				**1,820,000**		**1,820,000**

Budget Impact/Other

City Capital Plan Equipment Replacment

FY '23 *thru* FY '27

City of Marshalltown, Iowa

Department AIRPORT
Contact Heather Thomas

Project # ARP_E
Project Name Rehab - Runway 13/31 Pavement

Type Maintenance
Useful Life 25 years
Category 460770 AIRPORT PROJECT-

Division AIRPORT
Object
Location

Priority Critical
Status Active
Total Project Cost: **$5,460,000**

Description

Pavement Rehabilitation – Runway 13/31 – This is a major need of the airport and is only shown as late in the CIP as it is due to available funding. The joints are in need of significant work. Attempts to seal the joints have not been successful due to the size of the voids under the joint – the sealant isn't able to fill the void. Evaluation of use a backer rod or other material before joint sealant was reviewed, but not cost effective with the a much-needed rehabilitation project just a few years out. The estimate shown in last year's CIP was not updated from the previous year and there has been significant cost increases in these projects since the start of the pandemic. To accommodate these multi-year increases, we are estimating a 40% project increase since these estimates were previously prepared by CGA. Again, we plan to utilize the CIP Planning Study to provide better estimates in the scope and cost of this project in FY24 to aid in planning for this project. There has been discussion as to whether runway 18/36 rehab is needed more or 18/36. This will be evaluated in the CIP Planning Study. We may need a joint sealing/repair project as a temporary measure until the runway rehab can be completed. A 40% increase results in total project cost of $5,460,000. Based on information supplied by Jeff in August, this project appears to have been pushed from the FY27 submittal shown in last year's CIP; I've gone ahead and left it on for now until we can better understand available funding.

Justification

Expenditures	FY '23	FY '24	FY '25	FY '26	FY '27	Total
Construction					5,460,000	5,460,000
Total					**5,460,000**	**5,460,000**

Funding Sources	FY '23	FY '24	FY '25	FY '26	FY '27	Total
312 - AIRPORT PROJECTS					4,914,000	4,914,000
353 - CAPITAL PROJECTS					546,000	546,000
Total					**5,460,000**	**5,460,000**

Budget Impact/Other

City Capital Plan Equipment Replacment

FY '23 *thru* FY '27

City of Marshalltown, Iowa

Department AIRPORT
Contact Heather Thomas

Project # ARP_F
Project Name Sewer Phase X - Point Repairs / Connect 24hr Rstrm

Type Maintenance
Useful Life 30 years
Category 0012080 GEN'L-AIRPORT
Priority Important
Status Active
Total Project Cost: **$91,500**

Division AIRPORT
Object
Location

Description

One project that has come to light during 2022 is the need to address sanitary waste out there– We had hoped this would be a relatively small item. However, as we have been working on the terminal project, we've investigated further and we have more serious issues that need addressed.

The existing treatment includes conveyance sewers, a septic tank, and lateral lines. We have attempted to televise conveyance sewers and have not been able to run a camera through as we have been stopped at two places that are impassable and will require a point repair under the existing pavement to address.

The septic tank lid has now collapsed and a metal plate is temporarily placed on top for safety. The lateral lines are plugged and not accessible.

The 24-hour restroom sewer line does not get to the septic system currently - so that project has been put on hold.

While additional investigation is needed, we've conceptually put together a $235,000 estimate if we were to perform the sanitary sewer point repairs, replace the septic/secondary treatment, and tie-in a new 24-hour restroom. This is what we submitted for federal AIP; however, learned that there would be no AIP or BIL funding is able to cover this type of project. We have completed additional analysis and believe we can

Therefore, we have phased this project into the following:
Phase W – Septic
$ 30,000
Phase X – Sewer Point Repairs & Connection of 24-Hour Restroom Hangar
$ 91,500
Phase Y – Lining Orangeburg Pipe under Pavement
$ 50,000
Phase Z – 24 Hour Restroom
$ 20,000

Justification

Expenditures	FY '23	FY '24	FY '25	FY '26	FY '27	Total
Construction		91,500				91,500
Total		**91,500**				**91,500**

Funding Sources	FY '23	FY '24	FY '25	FY '26	FY '27	Total
031 - BUILDING MAINTENANCE		11,500				11,500
312 - AIRPORT PROJECTS		80,000				80,000
Total		**91,500**				**91,500**

Budget Impact/Other

$80,000 estimate to pull from 312 Bond Funds unspent with Airport Hangar/Terminal Project

$11,500 estimate remaining - POTENTIAL FRANCHISE FEE

City Capital Plan Equipment Replacment

FY '23 *thru* FY '27

City of Marshalltown, Iowa

Department AIRPORT
Contact Heather Thomas

Project # ARP_G
Project Name Sewer Phase Y - Lining Orangeburg under Pvmnt

Type Maintenance
Useful Life 50 years
Category 0012080 GEN'L-AIRPORT

Division AIRPORT
Object
Priority Important
Location
Status Active
Total Project Cost: **$50,000**

Description

One project that has come to light during 2022 is the need to address sanitary waste out there– We had hoped this would be a relatively small item. However, as we have been working on the terminal project, we've investigated further and we have more serious issues that need addressed.

The existing treatment includes conveyance sewers, a septic tank, and lateral lines. We have attempted to televise conveyance sewers and have not been able to run a camera through as we have been stopped at two places that are impassable and will require a point repair under the existing pavement to address.

The septic tank lid has now collapsed and a metal plate is temporarily placed on top for safety. The lateral lines are plugged and not accessible.

The 24-hour restroom sewer line does not get to the septic system currently - so that project has been put on hold.

While additional investigation is needed, we've conceptually put together a $235,000 estimate if we were to perform the sanitary sewer point repairs, replace the septic/secondary treatment, and tie-in a new 24-hour restroom. This is what we submitted for federal AIP; however, learned that there would be no AIP or BIL funding is able to cover this type of project. We have completed additional analysis and believe we can

Therefore, we have phased this project into the following:
Phase W – Septic
$ 30,000
Phase X – Sewer Point Repairs & Connection of 24-Hour Restroom Hangar
$ 91,500
Phase Y – Lining Orangeburg Pipe under Pavement
$ 50,000
Phase Z – 24 Hour Restroom
$ 20,000

01/16/23 - Phase Y pushed from FY25 to FY26 due to Fund 031 budgetting

Justification

Expenditures	FY '23	FY '24	FY '25	FY '26	FY '27	Total
Maintenance				50,000		50,000
Total				**50,000**		**50,000**

Funding Sources	FY '23	FY '24	FY '25	FY '26	FY '27	Total
031 - BUILDING MAINTENANCE				50,000		50,000
Total				**50,000**		**50,000**

Budget Impact/Other

POSSIBLE FRANCHISE FEE

City Capital Plan Equipment Replacment

FY '23 *thru* FY '27

City of Marshalltown, Iowa

Department AIRPORT
Contact Heather Thomas

Project # ARP_H
Project Name Sewer Phase Z - 24 Hr Rstrm (Labor from Util Div)

Type Improvement
Useful Life 20 years
Category 0012080 GEN'L-AIRPORT
Priority Important
Status Active
Total Project Cost: $20,000

Division AIRPORT
Object
Location

Description

One project that has come to light during 2022 is the need to address sanitary waste out there– We had hoped this would be a relatively small item. However, as we have been working on the terminal project, we've investigated further and we have more serious issues that need addressed.

The existing treatment includes conveyance sewers, a septic tank, and lateral lines. We have attempted to televise conveyance sewers and have not been able to run a camera through as we have been stopped at two places that are impassable and will require a point repair under the existing pavement to address.

The septic tank lid has now collapsed and a metal plate is temporarily placed on top for safety. The lateral lines are plugged and not accessible.

The 24-hour restroom sewer line does not get to the septic system currently - so that project has been put on hold.

While additional investigation is needed, we've conceptually put together a $235,000 estimate if we were to perform the sanitary sewer point repairs, replace the septic/secondary treatment, and tie-in a new 24-hour restroom. This is what we submitted for federal AIP; however, learned that there would be no AIP or BIL funding is able to cover this type of project. We have completed additional analysis and believe we can

Therefore, we have phased this project into the following:
Phase W – Septic
$ 30,000
Phase X – Sewer Point Repairs & Connection of 24-Hour Restroom Hangar
$ 91,500
Phase Y – Lining Orangeburg Pipe under Pavement
$ 50,000
Phase Z – 24 Hour Restroom
$ 20,000

01/16/23 - Phase Z pushed from FY24 to FY25 due to Fund 031 budgetting

Justification

Expenditures	FY '23	FY '24	FY '25	FY '26	FY '27	Total
Construction			20,000			20,000
Total			**20,000**			**20,000**

Funding Sources	FY '23	FY '24	FY '25	FY '26	FY '27	Total
031 - BUILDING MAINTENANCE			20,000			20,000
Total			**20,000**			**20,000**

Budget Impact/Other

POSSIBLE FRANCHISE FEE USE

Insurance proceeds from the Derecho in relation to this restroom were deposited into Fund 312 and will be used to work on the sewer line for the 24-hour restroom.

City Capital Plan Equipment Replacment

FY '23 *thru* FY '27

City of Marshalltown, Iowa

Department AIRPORT
Contact Heather Thomas

Project # ARP_I
Project Name Water Line Replacement

Type Maintenance
Useful Life 40 years
Category 0012080 GEN'L-AIRPORT
Priority Very Important
Status Active
Total Project Cost: $40,000

Division AIRPORT
Object
Location

Description

The existing 4-inch water service line from the Central Iowa Water connection to the existing valve installed with the hangar/terminal project is an older galvanized and corroded line. The line is causing discolored water which is staining new fixtures in the terminal.

Desire to replace the line. Intend to use City Utility / Sewer Division Staff.

Material Estimate = $40,000

Justification

Expenditures	FY '23	FY '24	FY '25	FY '26	FY '27	Total
Construction	40,000					40,000
Total	**40,000**					**40,000**

Funding Sources	FY '23	FY '24	FY '25	FY '26	FY '27	Total
312 - AIRPORT PROJECTS	40,000					40,000
Total	**40,000**					**40,000**

Budget Impact/Other

Plan to fund with unspent Bond Funds from 312, airport hangar/terminal project.

City Capital Plan Equipment Replacment

FY '23 *thru* FY '27

City of Marshalltown, Iowa

Department AIRPORT
Contact Heather Thomas

Project # ARP_SRE
Project Name Snow Removal Equipment

Type Equipment
Useful Life 15 years
Category 0012080 GEN'L-AIRPORT
Priority Important
Status Active
Total Project Cost: $500,000

Division AIRPORT
Object
Location

Description

Existing snow removal equipment utilized at the airport are end of life equipment pieces from the city's street division as hand me downs. The bucket/blades are causing damage to the pavement as a result of the poor joints in the runway. A different process is needed to prevent further damage to existing pavement and equipment, but also ahead of investing millions of dollars in runway rehabilitation. In discussions with other airports on the best process they have found, many good things have been heard about a tractor with front PTO and broom. This allows the deep snow to be removed through conventional plowing methods – but instead of putting the blade down that could catch joints – it is left up ½ an inch or so and the broom follows to take care of the remaining amount. Based on conversations with other airports / consultants familiar with this setup, a budgetary number is $450,000. Including a consulting fee of $50,000 – we are showing $500,000 in our CIP for this need. This an eligible BIL/AIP item. We propose to use AIP/BIL funds to the max 90% so
$450K - BIL/AIP Funds
$50K Local Funds

Justification

Expenditures	FY '23	FY '24	FY '25	FY '26	FY '27	Total
Planning & Design Engineering		50,000				50,000
Construction			450,000			450,000
Total		**50,000**	**450,000**			**500,000**

Funding Sources	FY '23	FY '24	FY '25	FY '26	FY '27	Total
030 - CIP FUND		50,000				50,000
312 - AIRPORT PROJECTS			450,000			450,000
Total		**50,000**	**450,000**			**500,000**

Budget Impact/Other

City Capital Plan Equipment Replacment

FY '23 *thru* FY '27

City of Marshalltown, Iowa

Department AIRPORT
Contact Heather Thomas

Project # B3011
Project Name 120' x 100' Hangar & Terminal &Vault

Type Improvement
Useful Life 40 years
Category 0012080 GEN'L-AIRPORT
Priority Critical
Status Active

Division AIRPORT
Object 5776.000 BUILDINGS & IMPR
Location AIRPORT TERMINAL

Total Project Cost: **$3,679,452**

Description

This project is wrapping up construction. This included a new 120 foot by 100 foot hangar at the Airport to handle larger jets and transient jets needing to be stored indoors for an overnight stay; a new terminal facility to provide a more passenger-friendly space for arrivals and departures; and a new vault to control electrical and communication systems.

Justification

Expenditures	FY '23	FY '24	FY '25	FY '26	FY '27	Total
Construction	428,951					428,951
Buildings	92,168					92,168
Construction Engineering	38,053					38,053
Total	**559,172**					**559,172**

Funding Sources	FY '23	FY '24	FY '25	FY '26	FY '27	Total
312 - AIRPORT PROJECTS	559,172					559,172
Total	**559,172**					**559,172**

Budget Impact/Other

The City boorowed $2M in GO Bonds.

Once premium and interest was earned, we are estimating $2,057,631 in bond funds.

The City is using several federal and state grants and the airport entitlement money from FY20-FY23 (Fed).

City Capital Plan Equipment Replacment

FY '23 *thru* FY '27

City of Marshalltown, Iowa

Department CARNEGIE & COLISEUM B
Contact Heather Thomas

Project # CARN_A
Project Name Drain Tile Install Along State St

Type Improvement
Useful Life 20 years
Category 0016051 CARNEGIE BUILDI

Division BUILDING
Object
Location

Priority Important
Status Active
Total Project Cost: $15,000

Description

Consider installing drain tile along Carnegie Building while sidewalk is torn out for State St project.

There is a sump pump that it could be tied to located in the Engineering Concrete Cylinder Area in the basement.

Justification

Expenditures	FY '23	FY '24	FY '25	FY '26	FY '27	Total
Construction		15,000				15,000
Total		**15,000**				**15,000**

Funding Sources	FY '23	FY '24	FY '25	FY '26	FY '27	Total
031 - BUILDING MAINTENANCE		15,000				15,000
Total		**15,000**				**15,000**

Budget Impact/Other

City Capital Plan Equipment Replacment

FY '23 *thru* FY '27

City of Marshalltown, Iowa

Department CARNEGIE & COLISEUM B
Contact Heather Thomas

Project # CARN_B
Project Name Drain Tile Install Along Center St

Type Improvement
Useful Life 20 years
Category 0016051 CARNEGIE BUILDI

Division BUILDING
Object
Location

Priority Important
Status Active
Total Project Cost: $12,000

Description

Consider installing drain tile along Carnegie Building while sidewalk is torn out for Center St project.

There is a sump pump that it could be tied to located in the Engineering Concrete Cylinder Area in the basement. - You would need to run the tile around the stairs at the corner so this section would have an outlet spot tied to the previous phase.

Justification

Expenditures	FY '23	FY '24	FY '25	FY '26	FY '27	Total
Construction			12,000			12,000
Total			**12,000**			**12,000**

Funding Sources	FY '23	FY '24	FY '25	FY '26	FY '27	Total
031 - BUILDING MAINTENANCE			12,000			12,000
Total			**12,000**			**12,000**

Budget Impact/Other

City Capital Plan Equipment Replacment

FY '23 *thru* FY '27

City of Marshalltown, Iowa

Department CARNEGIE & COLISEUM B
Contact Heather Thomas

Project # CARN_C
Project Name Carnegie Security Updates - For Council Mtgs

Type Improvement
Useful Life 15 years
Category 0016051 CARNEGIE BUILDI

Division BUILDING
Object
Priority Important
Location
Status Active
Total Project Cost: **$50,000**

Description

Staff desire to seal off the remainder of Carnegie Building (and City Hall) from the Council Chambers during council meetings. Currently - any member of the public could get anywhere inside if they were attending meetings.

This would likely include a alarmed gate/door near the council restrooms, potential changes to elevator programming, and change in proceedures for locked doors at each floor.

A budget item was in FY23; however, only cameras were installed. This was updated and delayed fo FY24.

01/16/23 - Improvements pushed from FY24 to FY25 due to Fund 031 budgetting

Elevator reprogramming needs further evaluation.

Budget $20k for door/gate & $30k for elevator.

Justification

Expenditures	FY '23	FY '24	FY '25	FY '26	FY '27	Total
Construction			50,000			50,000
Total			**50,000**			**50,000**

Funding Sources	FY '23	FY '24	FY '25	FY '26	FY '27	Total
031 - BUILDING MAINTENANCE			50,000			50,000
Total			**50,000**			**50,000**

Budget Impact/Other

City Capital Plan Equipment Replacment

FY '23 *thru* FY '27

City of Marshalltown, Iowa

Department CARNEGIE & COLISEUM B
Contact Heather Thomas

Project # CARN_D
Project Name Roof Stairway Dental Limestone Sealant

Type Maintenance
Useful Life 20 years
Category 0016051 CARNEGIE BUILDI

Division BUILDING
Object
Location

Priority Important
Status Active
Total Project Cost: $20,000

Description

The roof near the roof stairwell has several facades shown that has deterioriated limestone molding. Needs rebuilt with synthetic/epoxy. Could try coating it as it is not visible from roadway or sidewalk.

Noticed in CY22. Try to address by FY25.

Budget - $ 20,000

Justification

Expenditures	FY '23	FY '24	FY '25	FY '26	FY '27	Total
Maintenance			20,000			20,000
Total			**20,000**			**20,000**

Funding Sources	FY '23	FY '24	FY '25	FY '26	FY '27	Total
031 - BUILDING MAINTENANCE			20,000			20,000
Total			**20,000**			**20,000**

Budget Impact/Other

FRANCHISE FEE POTENTIAL

City Capital Plan Equipment Replacment

FY '23 *thru* FY '27

City of Marshalltown, Iowa

Department CARNEGIE & COLISEUM B
Contact Heather Thomas

Project # COL_Gen
Project Name Coliseum Generator

Type Equipment
Useful Life 15 years
Category 0304065 CIP-COLISEUM

Division BUILDING
Object
Location

Priority Important
Status Active
Total Project Cost: $251,292

Description

The Coliseum is outfitted with hookups for a permanent generator to be placed on the southwest corner of the building.

The Coliseum is a key facility for disaster response and planning, and can be used for sheltering and other purposes with a generator that will operate the entire building. Initial plans were to provide hookups for a portable generator but the derecho brought about the reality that a portable generator could not be easily located. This project provides the best case scenario for the long term use of the Coliseum in disaster response.

Project was bid, due to 62 week lead time - construction will likely not be until FY24

Construction Budget 244050
Engineering 7242

The City received a grant from FEMA for a total of $135,000. The City also had funds budgeted in the Building Maintenance Fund, which are being used to cover the cost of the engineering for the project as well as uncovered costs. The City also received a donation from United Way to cover expenses related to the generator, which is the shown amount coming from the Parks and Rec Donation Fund (140).

Justification

Expenditures	FY '23	FY '24	FY '25	FY '26	FY '27	Total
Planning & Design Engineering	7,242					7,242
Equip/Vehicles/Furnishings		244,050				244,050
Total	**7,242**	**244,050**				**251,292**

Funding Sources	FY '23	FY '24	FY '25	FY '26	FY '27	Total
031 - BUILDING MAINTENANCE	7,242	26,775				34,017
133 - MISC PUBLIC WORKS GRANTS		135,000				135,000
140 - P & R GIFT FUND		82,275				82,275
Total	**7,242**	**244,050**				**251,292**

Budget Impact/Other

City Capital Plan Equipment Replacment

FY '23 *thru* FY '27

City of Marshalltown, Iowa

Department CITY CLERK
Contact

Project # E8402010001
Project Name Copier

Type Equipment
Useful Life 6 years
Category 0306020 CIP-CITY CLERK

Division CITY CLERK'S OFFICE
Object 5749.000 OTHER CAPITAL EQ
Priority Very Important
Location City Clerk
Status Active
Total Project Cost: **$21,474**

Description

Ricoh MP C4503 Copier, serial: 13809159 - main floor
Replace FY22 $5,500 (moved to FY23)

12/21/22 - ordered Lanier C4500 45 PPM Color A4 MFD w/ 15 Amp Power Filter, Cabinet Type F, Internal Finisher SR3250 $5,474.00

Justification

Expenditures	FY '23	FY '24	FY '25	FY '26	FY '27	Total
Equip/Vehicles/Furnishings	5,474					5,474
Total	**5,474**					**5,474**

Funding Sources	FY '23	FY '24	FY '25	FY '26	FY '27	Total
030 - CIP FUND	5,474					5,474
Total	**5,474**					**5,474**

Budget Impact/Other

Budget Items	FY '23	FY '24	FY '25	FY '26	FY '27	Total
5750.000: OTHER CAPITAL EQUIPMENT=>5,000	5,474					5,474
Total	**5,474**					**5,474**

City Capital Plan Equipment Replacment

FY '23 *thru* FY '27

City of Marshalltown, Iowa

Department CITY HALL
Contact Heather Thomas

Project # CH0009
Project Name Replace Windows

Type Maintenance
Useful Life 30 years
Category 0316050 Bldg Maint - City Hal
Priority Very Important
Status Active

Division CITY HALL
Object 5410.000 REPAIRS/MAINT
Location

Total Project Cost: **$54,000**

Description

City Hall has a number of original windows which are not energy efficient and contribute to loss of heating and cooling. Estimated 27 Original Windows Remaining as of 12/2022

Replacing the windows provides a more comfortable work environment while also controlling heating and cooling costs by saving energy.

Estimate $2k / window. $54k

Pushed from FY25 to FY27 in Dec 2022

Justification

Expenditures	FY '23	FY '24	FY '25	FY '26	FY '27	Total
Maintenance					54,000	54,000
Total					**54,000**	**54,000**

Funding Sources	FY '23	FY '24	FY '25	FY '26	FY '27	Total
031 - BUILDING MAINTENANCE					54,000	54,000
Total					**54,000**	**54,000**

Budget Impact/Other

City Capital Plan Equipment Replacment

FY '23 *thru* FY '27

City of Marshalltown, Iowa

Department CITY HALL
Contact Heather Thomas

Project # **CH0016**
Project Name **Replace East Entrance Door and Steps**

Type Maintenance
Useful Life 40 years
Category 0316050 Bldg Maint - City Hal

Division BUILDING
Object 5340.200 CONTRACT - OTHE
Priority Less Important
Location CITY HALL
Status Active
Total Project Cost: **$30,000**

Description

ASK JESSICA - DAVID thinks they were redone in 2010.

Replace east entrance (24 N. Center) door to City Hall and replace th front steps and approach, which have deteriorated.

Consider joining with Downtown Plan - Center St Phase (in design in 2023), Earliest Construction would be 2024. Put in FY25 budget.

The hinges to the door are wearing out and the door and frame will need to be replaced in order to secure the building. The front steps provide necessary accessibility and should be replaced to ensure safe access into the building by employee and the public.

Justification

Expenditures	FY '23	FY '24	FY '25	FY '26	FY '27	Total
Construction			30,000			30,000
Total			**30,000**			**30,000**

Funding Sources	FY '23	FY '24	FY '25	FY '26	FY '27	Total
031 - BUILDING MAINTENANCE			30,000			30,000
Total			**30,000**			**30,000**

Budget Impact/Other

City Capital Plan Equipment Replacment

FY '23 *thru* FY '27

City of Marshalltown, Iowa

Department CITY HALL
Contact Heather Thomas

Project # CH0023
Project Name City Hall New Boiler

Type Improvement
Useful Life 20 years
Category 0016050 GEN'L-CITY HALL
Priority Critical
Status Active
Total Project Cost: $150,000

Division BUILDING
Object
Location

Description

City Hall at 24 North Center Street shares some systems with YSS at 22 North Center Street, including a boiler system. This project is for the future replacement of that boiler. At this time, an agreement with YSS allows us to maintain that connection.

Seperating the City Hall from a boiler system in another building provides a clear break as to who is reponsible for what. No problems have occurred at this time.

Currently have A/C in basement for 1st floor and on roof for 2nd floor. One option would be to change out those units to be dual heat/cool Estimate $200k.

Other option would be so add new boiler under new Finance space - retain radiators, etc.
Estimate $150k for new boiler (with hot water heat) for city hall only. Look into similar hot water boilers as the PD has.

Justification

Expenditures	FY '23	FY '24	FY '25	FY '26	FY '27	Total
Construction				150,000		150,000
Total				**150,000**		**150,000**

Funding Sources	FY '23	FY '24	FY '25	FY '26	FY '27	Total
031 - BUILDING MAINTENANCE				150,000		150,000
Total				**150,000**		**150,000**

Budget Impact/Other

City Capital Plan Equipment Replacment

FY '23 *thru* FY '27

City of Marshalltown, Iowa

Department CITY HALL
Contact Heather Thomas

Project # CH0024
Project Name City Hall / YSS Boiler Repair

Type Maintenance
Useful Life 5 years
Category 0316050 Bldg Maint - City Hal

Division CITY HALL
Object
Location

Priority Critical
Status Active
Total Project Cost: **$12,616**

Description

Shared Boiler for YSS/City Hall needs repaired.
Gaskets are leaking. Had service call, quote for $12,184 for repair.
Total cost of $12,616 with $431,94 in city material costs.

Justification

Expenditures	FY '23	FY '24	FY '25	FY '26	FY '27	Total
Buildings	12,616					12,616
Total	**12,616**					**12,616**

Funding Sources	FY '23	FY '24	FY '25	FY '26	FY '27	Total
031 - BUILDING MAINTENANCE	12,616					12,616
Total	**12,616**					**12,616**

Budget Impact/Other

City Capital Plan Equipment Replacment

FY '23 *thru* FY '27

City of Marshalltown, Iowa

Department CITY HALL
Contact Heather Thomas

Project # CH0026
Project Name Old Chamber Room Conversion

Type Improvement
Useful Life 20 years
Category 0016050 GEN'L-CITY HALL
Priority Important
Status Active
Total Project Cost: $45,000

Division BUILDING
Object
Location

Description

Convert old council chambers to usable conference room with IT/Screen Set-Up.

New Ceiling Tile
New Lights
Carpet
Baseboard
Window Trim
Painting
IT for Phone/Computer-TV

Justification

Expenditures	FY '23	FY '24	FY '25	FY '26	FY '27	Total
Buildings					45,000	45,000
Total					**45,000**	**45,000**

Funding Sources	FY '23	FY '24	FY '25	FY '26	FY '27	Total
031 - BUILDING MAINTENANCE					45,000	45,000
Total					**45,000**	**45,000**

Budget Impact/Other

City Capital Plan Equipment Replacment

FY '23 *thru* FY '27

City of Marshalltown, Iowa

Department CITY WIDE BUILDING MAI
Contact Heather Thomas

Project # BLDG_VEH
Project Name Pickup Truck - Facilities Superintendent

Type Equipment
Useful Life 10 years
Category 0016050 GEN'L-CITY HALL

Division BUILDING
Object
Priority Important
Location
Status Active
Total Project Cost: **$40,000**

Description

The Facility/Utility Truck is a Colorado that has been deemed unsafe and surplused. On a temporary basis, the superintendent will use the Utility Truck (available because one of the electrical positions is vacant) or a compact SUV from Houseing (available because of unfilled positions).

Plan for new truck purchase in FY25.

Budget $40k

Justification

Expenditures	FY '23	FY '24	FY '25	FY '26	FY '27	Total
Equip/Vehicles/Furnishings			40,000			40,000
Total			**40,000**			**40,000**

Funding Sources	FY '23	FY '24	FY '25	FY '26	FY '27	Total
030 - CIP FUND			40,000			40,000
Total			**40,000**			**40,000**

Budget Impact/Other

City Capital Plan Equipment Replacment

FY '23 *thru* FY '27

City of Marshalltown, Iowa

Department CITY WIDE BUILDING MAI
Contact Heather Thomas

Project # PDFD_A
Project Name Generator Replacement - PD/Fire

Type Equipment
Useful Life 10 years
Category 0311010 Bldg Maint - Police de

Division BUILDING
Object
Priority Less Important
Location
Status Active
Total Project Cost: $440,000

Description

FUNDING SWAP Fund 354 funds were swapped with 363; therefore, showing 363 as funding source.

The police and fire departments have expressed interest in replacing the generator at the new police and fire station with a larger generator. Currently the generator is sized to provide emergency power to the communication center, the emergency operations center (conference room), and the red outlets throughout the facility. The police department desires emergency power to be available in the chief's office which currently has no red outlets. The fire department desires emergency power be available to supply A/C to the fire sleep rooms.

Need additional clarification on what the existing system serves and what it doesn't.

There have been discussions between PD, Fire, and the Library that the Library would like to use the existing generator from PD/Fire.

PWD attended a recent generator service and believe there is a need to evaluate UPS options. The generator transfer delay is set short which is hard on equipment. The transfer delay should be extended and supplemented with UPS - if the power transfer is causing issues for the short downtime. This investigation was delayed after learning that PD/Fire wanted a full generator replacement.

PWD obtained a budgetary cost for the new generator in May 2022 for $240,000. To account for minor work needs not included in budgetary cost and consideration for potential UPS needs - this was increased to $300,000.

Would need to be engineered/publically bid. If approved, planning/engineering in CY23 with bid in the Fall with 16 month lead times would result in CY25 construction. Budget for FY25 (might get pushed to FY26). Allow for 10% professional design fees & account for 3 years inflation at $10%/year = $440,000

Pull cost estimate and design engineering forward to years.
$5,000 in FY23 and $15,000 in FY24

Justification

Expenditures	FY '23	FY '24	FY '25	FY '26	FY '27	Total
Planning & Design Engineering	5,000	15,000				20,000
Equip/Vehicles/Furnishings			420,000			420,000
Total	**5,000**	**15,000**	**420,000**			**440,000**

Funding Sources	FY '23	FY '24	FY '25	FY '26	FY '27	Total
363- 2021 GO BOND	5,000	15,000	420,000			440,000
Total	**5,000**	**15,000**	**420,000**			**440,000**

Budget Impact/Other

City Capital Plan Equipment Replacment

FY '23 *thru* FY '27

City of Marshalltown, Iowa

Department CITY WIDE BUILDING MAI
Contact Heather Thomas

Project # PWB_A
Project Name Wash Bay Renovations

Type Maintenance
Useful Life 20 years
Category 1102010 RUT-STR MAINTEN

Division BUILDING
Object
Priority Important
Location
Status Active
Total Project Cost: $75,000

Description

The city's wash bay located at the public works facility is used by all departments. The inside walls were lined with steel when the facility was built and they have corroded and rusted away. The walk through doors are rusted out at the bottom and the mechanical parts are at/nearing the end of life.

Proposed project to reskin the inside of the wash bay with a pvc type material (more resistant to the salt), replace pedestrian doors, and replace the guts of the wash bay facility - as needed.

Plan would be for city staff, mostly from PW-Streets, PW-Sewer, and PW-Facility/Utility, to provide the labor for the reskin portion. Desire to do in the winter when staff are more avaialble (and avoid a snow storm)!

$75,000 is place-holder. This is believed to cover the gut replacements and provide for the material for the reskin and door replacement.

Justification

Expenditures	FY '23	FY '24	FY '25	FY '26	FY '27	Total
Buildings		75,000				75,000
Total		**75,000**				**75,000**

Funding Sources	FY '23	FY '24	FY '25	FY '26	FY '27	Total
031 - BUILDING MAINTENANCE		25,000				25,000
110 - ROAD USE TAX $		25,000				25,000
690 - TRANSIT		25,000				25,000
Total		**75,000**				**75,000**

Budget Impact/Other

City Capital Plan Equipment Replacment

FY '23 *thru* FY '27

City of Marshalltown, Iowa

Department CITY WIDE BUILDING MAI
Contact Heather Thomas

Project # PWB_B
Project Name Grandstand Concrete Wall Repair

Type Maintenance
Useful Life 20 years
Category 1102050 RUT-SNOW REMOV

Division BUILDING
Object
Location

Priority Important
Status Active
Total Project Cost: $40,000

Description

Existing walls of grandstand where salt is stored is deteriorated. Structural Wall Repair and filling in old window areas.

Complete with city staff.

Material estimate $40,000

Justification

Expenditures	FY '23	FY '24	FY '25	FY '26	FY '27	Total
Buildings		40,000				40,000
Total		**40,000**				**40,000**

Funding Sources	FY '23	FY '24	FY '25	FY '26	FY '27	Total
110 - ROAD USE TAX $		40,000				40,000
Total		**40,000**				**40,000**

Budget Impact/Other

City Capital Plan Equipment Replacment

FY '23 *thru* FY '27

City of Marshalltown, Iowa

Department COMPOST DIVISION
Contact Heather Thomas

Project # COM_A
Project Name Safety Barrier betwn Compost & Edgewood Retention

Type Improvement
Useful Life 25 years
Category 530540 COMPOST-SOLID W

Division COMPOST
Object
Priority Not Applicable
Location
Status Active
Total Project Cost: **$50,000**

Description

The construction of the Edgewood Industrial Park in 2022 created a potential safety concern between the compost yard and the new Edgewood Retention Pond. Concern for compost traffic driving off into the retention pond.

Consider fence, jersey barriers, or similar to provide a barrier between the two uses.

Justification

Expenditures	FY '23	FY '24	FY '25	FY '26	FY '27	Total
Construction			50,000			50,000
Total			**50,000**			**50,000**

Funding Sources	FY '23	FY '24	FY '25	FY '26	FY '27	Total
750 - COMPOST			50,000			50,000
Total			**50,000**			**50,000**

Budget Impact/Other

City Capital Plan Equipment Replacment

FY '23 *thru* FY '27

City of Marshalltown, Iowa

Department COMPOST DIVISION
Contact Heather Thomas

Project # E2192
Project Name Vibratory Screen

Type Equipment
Useful Life 15 years
Category 530540 COMPOST-SOLID W

Division COMPOST
Object 5749.000 OTHER CAPITAL EQ
Priority Very Important

Location COMPOST FACILITY
Status Active

Total Project Cost: **$150,000**

Description

Existing screen equipment was purchased new in 1990 for $90,000

Screens compost by size. Evaluated vibratory screen vs trommel. Vibratory is what we currently have. If go with trommel, it rotates in screen and produces higher quality compost that standard vibratory screen.

Dec 2021 estimated costs are $130k for vibratory and $200k for trommel.We plan to stick with vibratory screen due to budgetary constraints.

Budget $150,000.

Justification

Expenditures	FY '23	FY '24	FY '25	FY '26	FY '27	Total
Equip/Vehicles/Furnishings				150,000		150,000
Total				**150,000**		**150,000**

Funding Sources	FY '23	FY '24	FY '25	FY '26	FY '27	Total
750 - COMPOST				150,000		150,000
Total				**150,000**		**150,000**

Budget Impact/Other

City Capital Plan Equipment Replacment

FY '23 *thru* FY '27

City of Marshalltown, Iowa

Department COMPOST DIVISION
Contact Heather Thomas

Project # E2196
Project Name Compost Turner

Type Equipment
Useful Life 15 years
Category 530540 COMPOST-SOLID W

Division COMPOST
Object 5749.000 OTHER CAPITAL EQ
Priority Very Important

Location COMPOST FACILITY
Status Active

Total Project Cost: **$90,000**

Description

Replacement of a 1991 Scat 482 B Compost Turner. City acquired existing equipment in April 1991 at an original cost of $52,867.

Rcvd quote 12/2021 for pull behind PTO Driven ($76,450) and pull behind - self contained ($366,600) - due to budget constraints, we will use pull behind PTO Driven and existing City tractors.

Due to there not being any available, this project has been pushed from FY22 purchase to FY23.

Will plan on surplusing and turning old turner in as scrap metal.

Justification

Existing equipment has safety concerns. City has made attempts to repair in house; however, parts are obsolete and there isn't much left of the metal that we can continue to weld on pieces to make repairs.

Expenditures	FY '23	FY '24	FY '25	FY '26	FY '27	Total
Equip/Vehicles/Furnishings	90,000					90,000
Total	**90,000**					**90,000**

Funding Sources	FY '23	FY '24	FY '25	FY '26	FY '27	Total
750 - COMPOST	90,000					90,000
Total	**90,000**					**90,000**

Budget Impact/Other

City Capital Plan Equipment Replacment

FY '23 *thru* FY '27

City of Marshalltown, Iowa

Department ENGINEERING DIVISION
Contact Heather Thomas

Project # 3504
Project Name Field Tablets

Type Equipment
Useful Life 5 years
Category 1102060 RUT-ENGINEERING

Division ENGINEERING
Object
Location

Priority Critical
Status Active
Total Project Cost: $15,500

Description

12/2022 Update - Split FY23 for tablet in FY23 with tablet/gis interface in FY24

Engineering field tablets to provide for the use of software necessary for the utilization of ESRI GIS Software & Construction Records

FY23 - Tablet
FY24 - GIS Tablet Interface w/ GIS Puck
FY27 - Tablet

Justification

Expenditures	FY '23	FY '24	FY '25	FY '26	FY '27	Total
Equip/Vehicles/Furnishings	2,000	7,000			6,500	15,500
Total	**2,000**	**7,000**			**6,500**	**15,500**

Funding Sources	FY '23	FY '24	FY '25	FY '26	FY '27	Total
110 - ROAD USE TAX $	2,000	2,000			6,500	10,500
612 - WPCP REVENUE FUND		3,000				3,000
740/741 - STORM WATER		2,000				2,000
Total	**2,000**	**7,000**			**6,500**	**15,500**

Budget Impact/Other

City Capital Plan Equipment Replacment

FY '23 *thru* FY '27

City of Marshalltown, Iowa

Department ENGINEERING DIVISION
Contact Heather Thomas

Project # E2131
Project Name Survey/Inspection Truck

Type Equipment
Useful Life 10 years
Category 1102060 RUT-ENGINEERING

Division ENGINEERING
Object 5749.000 OTHER CAPITAL EQ
Priority Critical
Location CITY HALL PARKING
Status Active
Total Project Cost: **$45,000**

Description

Engineering Truck set up with survey equipment box - use of inspection

Replacement for 2017 Dodge Ram 2500 Crew (Asset 7036)

Justification

Expenditures	FY '23	FY '24	FY '25	FY '26	FY '27	Total
Equip/Vehicles/Furnishings					45,000	45,000
Total					**45,000**	**45,000**

Funding Sources	FY '23	FY '24	FY '25	FY '26	FY '27	Total
110 - ROAD USE TAX $					30,000	30,000
612 - WPCP REVENUE FUND					9,000	9,000
740/741 - STORM WATER					6,000	6,000
Total					**45,000**	**45,000**

Budget Impact/Other

City Capital Plan Equipment Replacment

FY '23 *thru* FY '27

City of Marshalltown, Iowa

Department ENGINEERING DIVISION
Contact Heather Thomas

Project # E2178
Project Name Computer & Copier/Printer-Sec

Type Equipment
Useful Life 4 years
Category 1102060 RUT-ENGINEERING

Division ENGINEERING
Object 5703.000 MINOR COMPUTER
Priority Critical
Location City Hall
Status Active
Total Project Cost: **$6,500**

Description

Replace 3rd Floor Copier, Printer, Scanner
Used by Engineering, Building/Facility

Justification

Expenditures	FY '23	FY '24	FY '25	FY '26	FY '27	Total
Equip/Vehicles/Furnishings		6,500				6,500
Total		**6,500**				**6,500**

Funding Sources	FY '23	FY '24	FY '25	FY '26	FY '27	Total
110 - ROAD USE TAX $		6,500				6,500
Total		**6,500**				**6,500**

Budget Impact/Other

City Capital Plan Equipment Replacment

FY '23 *thru* FY '27

City of Marshalltown, Iowa

Department ENGINEERING DIVISION
Contact Heather Thomas

Project # E2181
Project Name Large Format Scanner & Plotter

Type Equipment
Useful Life 8 years
Category 1102060 RUT-ENGINEERING

Division ENGINEERING
Object
Priority Critical
Location CITY HALL
Status Active
Total Project Cost: $12,000

Description

Replacement plotter for the production of engineering drawings
Scanner $4610 in 2019
HP Printer $2905 in 2019

Necessary piece of equipment for the functioning of the division, the dollar figure will be split between the new scanner and plotter

Justification

Expenditures	FY '23	FY '24	FY '25	FY '26	FY '27	Total
Equip/Vehicles/Furnishings				12,000		12,000
Total				**12,000**		**12,000**

Funding Sources	FY '23	FY '24	FY '25	FY '26	FY '27	Total
110 - ROAD USE TAX $				12,000		12,000
Total				**12,000**		**12,000**

Budget Impact/Other

City Capital Plan Equipment Replacment

FY '23 *thru* FY '27

City of Marshalltown, Iowa

Department ENGINEERING DIVISION
Contact Heather Thomas

Project # E2189
Project Name Engineering - CAD/Computer Workstations

Type Equipment
Useful Life 3 years
Category 1102060 RUT-ENGINEERING

Division ENGINEERING
Object
Location

Priority Very Important
Status Active
Total Project Cost: $51,000

Description

Estimate for purchase of 2 CAD Work Stations with increase capacity for large data files and 1 Computer Work Station with standard capacity, and 1 PWD Surface. - Rotate desktops down to non CAD users. Computers with rotation are on 6-year cycle.

CAD Software is required for the production of engineeering plans for in-house design and certain City map products. It is also needed to communicate with Engineering Consultants and other entities, such as Iowa DOT for projects and delivery of updated maps to government agencies

In House Designs we are working on have file sizes / require processing that are too large for our existing computers to handle quickly. Sometimes we execute a command in CAD at the end of the day and hope it works and autosaved so we can continue the next day (or) we execute and wait for sometimes an hour+ for it to finish.

Justification

Expenditures	FY '23	FY '24	FY '25	FY '26	FY '27	Total
Equip/Vehicles/Furnishings	16,000			17,000		33,000
Total	**16,000**			**17,000**		**33,000**

Funding Sources	FY '23	FY '24	FY '25	FY '26	FY '27	Total
110 - ROAD USE TAX $	12,000			12,750		24,750
612 - WPCP REVENUE FUND	2,400			2,550		4,950
740/741 - STORM WATER	1,600			1,700		3,300
Total	**16,000**			**17,000**		**33,000**

Budget Impact/Other

City Capital Plan Equipment Replacment

FY '23 *thru* FY '27

City of Marshalltown, Iowa

Department ENGINEERING DIVISION
Contact Heather Thomas

Project # ENG_A
Project Name Storm Water Coordinator Truck/SUV

Type Equipment
Useful Life 10 years
Category 1102060 RUT-ENGINEERING

Division ENGINEERING
Object
Priority Important
Location
Status Active
Total Project Cost: $40,000

Description

Replace the storm water coordinator vehicle, currently a 2012 Ford Expedition XL 4X4 (Asset 6804).
Storm water coordinator assist with engineering construction inspection when not performing storm water duties.

Likely replace with 1/4 or 1/2 ton crew cab truck.

Justification

Expenditures	FY '23	FY '24	FY '25	FY '26	FY '27	Total
Equip/Vehicles/Furnishings		40,000				40,000
Total		**40,000**				**40,000**

Funding Sources	FY '23	FY '24	FY '25	FY '26	FY '27	Total
110 - ROAD USE TAX $		20,000				20,000
740/741 - STORM WATER		20,000				20,000
Total		**40,000**				**40,000**

Budget Impact/Other

City Capital Plan Equipment Replacment

FY '23 *thru* FY '27

City of Marshalltown, Iowa

Department ENGINEERING DIVISION
Contact Heather Thomas

Project # SE0047
Project Name Total Station Survey Equipment

Type Equipment
Useful Life 7 years
Category 1102060 RUT-ENGINEERING

Division ENGINEERING
Object
Location

Priority Critical
Status Active
Total Project Cost: $45,000

Description

Update equipment used for surveying - Non GPS, Higher Accuracty not impacted by vegetation cover.

Justification

Expenditures	FY '23	FY '24	FY '25	FY '26	FY '27	Total
Equip/Vehicles/Furnishings				45,000		45,000
Total				**45,000**		**45,000**

Funding Sources	FY '23	FY '24	FY '25	FY '26	FY '27	Total
110 - ROAD USE TAX $				45,000		45,000
Total				**45,000**		**45,000**

Budget Impact/Other

City Capital Plan Equipment Replacment

FY '23 *thru* FY '27

City of Marshalltown, Iowa

Department FIRE
Contact Heather Thomas

Project # Bldg Mt 012
Project Name Fire/Police Bldg - Backflow Preventer Replacement

Type Maintenance
Useful Life 10 years
Category 0311050 Bldg Maint - Fire Dep
Priority Critical
Status Active
Total Project Cost: **$18,000**

Division BUILDING
Object
Location

Description

Backflow preventers (located on potable water connection lines) are required to have annual inspections. The January 2022 inspection required service and repair on the 3-inch and 5-inch cast iron backflow preventers. They are nearing end of their life.

Budget for replacement of these in FY24.
3" estimated at $8,000
5" estimated at $10,000

Justification

Backflow preventers are required as part of obtaining water service. Failure to provide proof of passing annual inspections to MWW could result in service disconnection.

Expenditures	FY '23	FY '24	FY '25	FY '26	FY '27	Total
Buildings		18,000				18,000
Total		**18,000**				**18,000**

Funding Sources	FY '23	FY '24	FY '25	FY '26	FY '27	Total
031 - BUILDING MAINTENANCE		18,000				18,000
Total		**18,000**				**18,000**

Budget Impact/Other

City Capital Plan Equipment Replacment

FY '23 *thru* FY '27

City of Marshalltown, Iowa

Department FIRE
Contact

Project # E0030fir
Project Name Portable Radios

Type Equipment
Useful Life 10 years
Category 0301050 CIP-FIRE
Priority Critical
Status Active
Total Project Cost: $64,000

Division FIRE
Object 5718.000 MINOR EQUIPMENT
Location

Description

Harris XL-95P portable radios, which are the replacements for our current radios.

Justification

Current portable radios are no longer manufactured. Parts availability is unknown. This is the replacement model and this is the beginning of radio replacement. Since Marshall County established a new 800 MHz system, the radios are being purchased under the County purchase contract.

Expenditures	FY '23	FY '24	FY '25	FY '26	FY '27	Total
Equip/Vehicles/Furnishings		32,000	32,000			64,000
Total		**32,000**	**32,000**			**64,000**

Funding Sources	FY '23	FY '24	FY '25	FY '26	FY '27	Total
030 - CIP FUND		32,000	32,000			64,000
Total		**32,000**	**32,000**			**64,000**

Budget Impact/Other

Budget Items	FY '23	FY '24	FY '25	FY '26	FY '27	Total
5750.000: OTHER CAPITAL EQUIPMENT=>5,000		32,000	32,000			64,000
Total		**32,000**	**32,000**			**64,000**

City Capital Plan Equipment Replacment

FY '23 *thru* FY '27

City of Marshalltown, Iowa

Department FIRE
Contact

Project # E0042fir
Project Name Thermal Imaging Camera

Type Equipment
Useful Life 6 years
Category 0301050 CIP-FIRE
Priority Very Important
Status Active
Total Project Cost: $18,776

Division
Location
Object

Description

Thermal imaging cameras are designed to help firefighters locate victims in smoky conditions, as well as locate hidden fires.

Justification

Thermal imaging technology has improved significantly and the cost of technology has decerased. This equipment is a necessary firefighter safety tool allowing firefighters to detect and locate hidden fires, as well as assist in the location of victims. Current units are reaching end of life cycle.

Expenditures	FY '23	FY '24	FY '25	FY '26	FY '27	Total
Equip/Vehicles/Furnishings	9,388	9,388				18,776
Total	**9,388**	**9,388**				**18,776**

Funding Sources	FY '23	FY '24	FY '25	FY '26	FY '27	Total
030 - CIP FUND	9,388	9,388				18,776
Total	**9,388**	**9,388**				**18,776**

Budget Impact/Other

Budget Items	FY '23	FY '24	FY '25	FY '26	FY '27	Total
5750.000: OTHER CAPITAL EQUIPMENT=>5,000	9,388	9,388				18,776
Total	**9,388**	**9,388**				**18,776**

City Capital Plan Equipment Replacment

FY '23 *thru* FY '27

City of Marshalltown, Iowa

Department FIRE
Contact

Project # E0045fir
Project Name Alumacraft 16' Boat Replacement

Type Equipment
Useful Life 20 years
Category 0301050 CIP-FIRE
Priority Important
Status Active
Total Project Cost: $8,000

Division FIRE
Object 5749.000 OTHER CAPITAL EQ
Location

Description

PURCHASE DATE: 6/11/1997 MFG YEAR: 1997 PURCHASE PRICE: $2866

Justification

Replacement of current water rescue boat. Current boat is having transom issues and has been reinforced and welded several times. There is concern over the safety of the boat

Expenditures	FY '23	FY '24	FY '25	FY '26	FY '27	Total
Equip/Vehicles/Furnishings					8,000	8,000
Total					**8,000**	**8,000**

Funding Sources	FY '23	FY '24	FY '25	FY '26	FY '27	Total
030 - CIP FUND					8,000	8,000
Total					**8,000**	**8,000**

Budget Impact/Other

Budget Items	FY '23	FY '24	FY '25	FY '26	FY '27	Total
5750.000: OTHER CAPITAL EQUIPMENT=>5,000					8,000	8,000
Total					**8,000**	**8,000**

City Capital Plan Equipment Replacment

FY '23 *thru* FY '27

City of Marshalltown, Iowa

Department FIRE
Contact

Project # E0049fir
Project Name Dexter T-600 40 lb Washer

Type Equipment
Useful Life 10 years
Category 0301050 CIP-FIRE
Priority Important
Status Active
Total Project Cost: $8,000

Division FIRE
Object 5776.000 BUILDINGS & IMPR
Location

Description

Heavy duty commercial washer used to wash fire gear.

Justification

Removing carcinogens from fire gear is a proven step in reducing firefighter related cancer. Due to the weight of the gear, a heavy duty (40#) commercial extractor washer is required.

Expenditures	FY '23	FY '24	FY '25	FY '26	FY '27	Total
Equip/Vehicles/Furnishings					8,000	8,000
Total					**8,000**	**8,000**

Funding Sources	FY '23	FY '24	FY '25	FY '26	FY '27	Total
030 - CIP FUND					8,000	8,000
Total					**8,000**	**8,000**

Budget Impact/Other

Budget Items	FY '23	FY '24	FY '25	FY '26	FY '27	Total
5750.000: OTHER CAPITAL EQUIPMENT=>5,000					8,000	8,000
Total					**8,000**	**8,000**

City Capital Plan Equipment Replacment

FY '23 *thru* FY '27

City of Marshalltown, Iowa

Department FIRE
Contact

Project # E0073fir
Project Name SCBA Bottles

Type Equipment
Useful Life 10 years
Category 0301050 CIP-FIRE
Priority Very Important
Status Active
Total Project Cost: $9,465

Division
Location
Object

Description

Additional SCBA bottles to be added to tour new fire apparatus.

Justification

Having additional air bottles is important when refitting a frie truck after a fire. Additionally, with the equipping of our new fire apparatus, the number of available cylinders has decreased.

Expenditures	FY '23	FY '24	FY '25	FY '26	FY '27	Total
Equip/Vehicles/Furnishings	9,465					9,465
Total	**9,465**					**9,465**

Funding Sources	FY '23	FY '24	FY '25	FY '26	FY '27	Total
030 - CIP FUND	9,465					9,465
Total	**9,465**					**9,465**

Budget Impact/Other

Budget Items	FY '23	FY '24	FY '25	FY '26	FY '27	Total
5750.000: OTHER CAPITAL EQUIPMENT=>5,000	9,465					9,465
Total	**9,465**					**9,465**

City Capital Plan Equipment Replacment

FY '23 *thru* FY '27

City of Marshalltown, Iowa

Department FIRE
Contact

Project # E0074fir
Project Name Lucas CPR Device

Type Equipment
Useful Life 6 years
Category 0301050 CIP-FIRE
Priority Critical
Status Active
Total Project Cost: $19,990

Division
Location
Object

Description

Lucas CPR device delivers chest compressions mechanically, freeing people to do other procedures.

Justification

As EMS services from UnityPoint contimue to be uncertain, the Lucas Device allows MFD personnel the ability to provide care similar to the UPM.

Expenditures	FY '23	FY '24	FY '25	FY '26	FY '27	Total
Equip/Vehicles/Furnishings	19,990					19,990
Total	**19,990**					**19,990**

Funding Sources	FY '23	FY '24	FY '25	FY '26	FY '27	Total
030 - CIP FUND	19,990					19,990
Total	**19,990**					**19,990**

Budget Impact/Other

Budget Items	FY '23	FY '24	FY '25	FY '26	FY '27	Total
5750.000: OTHER CAPITAL EQUIPMENT=>5,000	19,990					19,990
Total	**19,990**					**19,990**

City Capital Plan Equipment Replacment

FY '23 *thru* FY '27

City of Marshalltown, Iowa

Department FIRE
Contact

Project # V0064fir
Project Name Exercise Equipment

Type Equipment
Useful Life 5 years
Category 0301050 CIP-FIRE
Priority Very Important
Status Active
Total Project Cost: $39,174

Division 19pr
Object 5718.000 MINOR EQUIPMENT
Location

Description

Partial Replacement of existing exercise equipment.

Justification

Replacement of exercise equipment, more specifically cardio equipment including treadmills and ellipitcals.

Expenditures	FY '23	FY '24	FY '25	FY '26	FY '27	Total
Equip/Vehicles/Furnishings			8,000			8,000
Total			**8,000**			**8,000**

Funding Sources	FY '23	FY '24	FY '25	FY '26	FY '27	Total
030 - CIP FUND			8,000			8,000
Total			**8,000**			**8,000**

Budget Impact/Other

City Capital Plan Equipment Replacment

FY '23 *thru* FY '27

City of Marshalltown, Iowa

Department FIRE
Contact

Project # V0070fir
Project Name R-177 Replacement

Type Unassigned
Useful Life 10 years
Category 0301050 CIP-FIRE
Priority Very Important
Status Active
Total Project Cost: $250,000

Division
Location
Object

Description

Replacement vehicle for R-177.

Justification

R-177 runs the majority of calls in the department. We have experienced several mechanical issues with the engine and chassis. The vehicle life span was 10 years. Recommend moving forward with purchase as delivery time is 32 - 36 months.

Expenditures	FY '23	FY '24	FY '25	FY '26	FY '27	Total
Equip/Vehicles/Furnishings				250,000		250,000
Total				**250,000**		**250,000**

Funding Sources	FY '23	FY '24	FY '25	FY '26	FY '27	Total
032 - CIP LARGE VEHICLE/EQUIPMENT				250,000		250,000
Total				**250,000**		**250,000**

Budget Impact/Other

Budget Items	FY '23	FY '24	FY '25	FY '26	FY '27	Total
5750.000: OTHER CAPITAL EQUIPMENT=>5,000				250,000		250,000
Total				**250,000**		**250,000**

City Capital Plan Equipment Replacment

FY '23 *thru* FY '27

City of Marshalltown, Iowa

Department HOUSING
Contact

Project # E2023
Project Name COPIER: Replace Lanier

Type Equipment
Useful Life 8 years
Category 0015030 GEN'L-HOUSING/Ur

Division ADMINISTRATION
Object 5749.000 OTHER CAPITAL EQ
Priority Less Important
Location HOUSING OFFICE
Status Active
Total Project Cost: **$5,000**

Description

Replace Lanier copier purchased FYE 2015.
Anticipated replacement date FYE 2023

12/21/22 - ordered Lanier C4500 45 PPM Color A4 MFD w/ 15 Amp Power Filter, Fax Option Type M37, Internal Finisher SR3250, LCIT RT3040, Paper Feed Unit PB3280 $6685

Justification

Replacing Lanier

Expenditures	FY '23	FY '24	FY '25	FY '26	FY '27	Total
Equip/Vehicles/Furnishings	5,000					5,000
Total	**5,000**					**5,000**

Funding Sources	FY '23	FY '24	FY '25	FY '26	FY '27	Total
030 - CIP FUND	5,000					5,000
Total	**5,000**					**5,000**

Budget Impact/Other

Budget Items	FY '23	FY '24	FY '25	FY '26	FY '27	Total
5750.000: OTHER CAPITAL EQUIPMENT=>5,000	5,000					5,000
Total	**5,000**					**5,000**

City Capital Plan Equipment Replacment

FY '23 *thru* FY '27

City of Marshalltown, Iowa

Department INFORMATION SYSTEMS
Contact Diana Steiner

Project # BdyCmraServ
Project Name Body Camera Servers - MPD

Type Equipment
Useful Life 5 years
Category 0016070 GEN'L-DATA PROC
Priority Critical
Status Active
Total Project Cost: $36,348

Division
Location
Object

Description

Servers to store body camera recordings

FY 18-19 - budget $15,000, spent $12,324.71

FY 19-20 - budget $15,000, did not spend. BDH advises the servers are in good operation. Replacement is advised in 2 years.

FY 21-22 - $9,023 with 5-6 year life

FY25 - $15,000 with 5-6 year life

Justification

This is needed in order to maintain the evidence of body camera footage.

Expenditures	FY '23	FY '24	FY '25	FY '26	FY '27	Total
Equip/Vehicles/Furnishings			15,000			15,000
Total			**15,000**			**15,000**

Funding Sources	FY '23	FY '24	FY '25	FY '26	FY '27	Total
030 - CIP FUND			15,000			15,000
Total			**15,000**			**15,000**

Budget Impact/Other

Servers need replaced every 5-7 years.

Budget Items	FY '23	FY '24	FY '25	FY '26	FY '27	Total
5740.000: COMPUTER EQUIPMENT =>5,000			15,000			15,000
Total			**15,000**			**15,000**

City Capital Plan Equipment Replacment

FY '23 *thru* FY '27

City of Marshalltown, Iowa

Department INFORMATION SYSTEMS
Contact

Project # Council22
Project Name Audio Visual Equipment for Council Chambers

Type Unassigned
Useful Life
Category 0011010 GEN'L-POLICE ADM
Priority Not Applicable
Status Active
Total Project Cost: **$31,566**

Division
Location
Object

Description

The audio visual equipment is needing updated with a change in how the Council meetings are recorded and broadcast.

Justification

The equipment will provide a better viewing experience for the online broadcast. Spent $21,566 in FY22 and estimating $10,000 for FY23.

Expenditures	FY '23	FY '24	FY '25	FY '26	FY '27	Total
Equip/Vehicles/Furnishings	10,000					10,000
Total	**10,000**					**10,000**

Funding Sources	FY '23	FY '24	FY '25	FY '26	FY '27	Total
030 - CIP FUND	10,000					10,000
Total	**10,000**					**10,000**

Budget Impact/Other

$21,566 spent in FY22 and estimate $10,000 to be spent in FY23

City Capital Plan Equipment Replacment

FY '23 *thru* FY '27

City of Marshalltown, Iowa

Department INFORMATION SYSTEMS
Contact

Project # E1000
Project Name Staff Computers

Type Equipment
Useful Life 5 years
Category 0016070 GEN'L-DATA PROC

Division INFORMATION TECHNOLO
Object 5703.000 MINOR COMPUTER
Priority Important
Location
Status Active
Total Project Cost: **$224,660**

Description

Replace or upgrade staff computers as deemed necessary

Justification

Need new computers or upgrades to continue to perform work. Replacements @ $1,200 for PC or $1,500 for Surface Pros. At this price range, should last 4-5 years. Less inexpensive computers may only last 3 years. May also be used to upgrade PC's. Budget 15 computers @1500

Expenditures	FY '23	FY '24	FY '25	FY '26	FY '27	Total
Equip/Vehicles/Furnishings	22,500	22,500	20,000	22,500	22,500	110,000
Total	**22,500**	**22,500**	**20,000**	**22,500**	**22,500**	**110,000**

Funding Sources	FY '23	FY '24	FY '25	FY '26	FY '27	Total
030 - CIP FUND	22,500	22,500	20,000	22,500	22,500	110,000
Total	**22,500**	**22,500**	**20,000**	**22,500**	**22,500**	**110,000**

Budget Impact/Other

Replace/upgrade several every year as needed.

City Capital Plan Equipment Replacment

FY '23 *thru* FY '27

City of Marshalltown, Iowa

Department INFORMATION SYSTEMS
Contact

Project # E3010
Project Name Servers

Type Equipment
Useful Life 5 years
Category 0306070 CIP-IT DATAPROCE

Division INFORMATION TECHNOLO
Object
Priority Very Important

Location City Hall
Status Active

Total Project Cost: **$83,910**

Description

Routine City Hall server upgrades and replacements needed to maintain the information technology infrastructure and reliability.

Secondary server replaced in FY23 and primary server replaced in FY25.

Justification

Routine server upgrades and replacements. Server + Microsoft Windows server licenses = $15,000.

Expenditures	FY '23	FY '24	FY '25	FY '26	FY '27	Total
Equip/Vehicles/Furnishings	15,000		15,000			30,000
Total	**15,000**		**15,000**			**30,000**

Funding Sources	FY '23	FY '24	FY '25	FY '26	FY '27	Total
030 - CIP FUND	15,000		15,000			30,000
Total	**15,000**		**15,000**			**30,000**

Budget Impact/Other

Need to maintain servers for data.

City Capital Plan Equipment Replacment

FY '23 *thru* FY '27

City of Marshalltown, Iowa

Department INFORMATION SYSTEMS
Contact Diana Steiner
Type Unassigned
Useful Life
Category 0016070 GEN'L-DATA PROC
Priority Not Applicable
Status Active
Total Project Cost: **$15,000**

Project # **ServerPDfile**
Project Name **SERVER MPD FILES**

Division
Location
Object

Description

This server is used by the Police Department to store their files. This may need replaced in FY2024.

Justification

This server is used by the Police Department to store their files. This may need replaced in FY2024. Servers have an estimated life of 5-7 years. Servers are shown as budgeted in the Data Processing/Information Technology function, which is overseen by the Finance Director..

Expenditures	FY '23	FY '24	FY '25	FY '26	FY '27	Total
Equip/Vehicles/Furnishings		15,000				15,000
Total		**15,000**				**15,000**

Funding Sources	FY '23	FY '24	FY '25	FY '26	FY '27	Total
030 - CIP FUND		15,000				15,000
Total		**15,000**				**15,000**

Budget Impact/Other

Servers need to be replaced every 5-7 years.

Budget Items	FY '23	FY '24	FY '25	FY '26	FY '27	Total
5740.000: COMPUTER EQUIPMENT =>5,000		15,000				15,000
Total		**15,000**				**15,000**

City Capital Plan Equipment Replacment

FY '23 *thru* FY '27

City of Marshalltown, Iowa

Department INFORMATION SYSTEMS
Contact Diana Steiner

Project # Servers
Project Name Tyler Servers

Type Equipment
Useful Life 5 years
Category 0306070 CIP-IT DATAPROCE

Division
Location
Object

Priority Very Important
Status Active
Total Project Cost: **$44,000**

Description

Servers and related licensing for accounting software

Justification

Two servers were purchased in 2016, when the City switched accounting software. Servers usually last between 5-7 years, so we need to budget for replacing them. We estimate $15,000 for the primary server and $11,000 for the backup server. An additional $3,000 for Windows licensing and $6,000 for SQL database licensing. The plan would be to replace one server with licensing in FY23 and one in FY24.

Expenditures	FY '23	FY '24	FY '25	FY '26	FY '27	Total
Equip/Vehicles/Furnishings	24,000	20,000				44,000
Total	**24,000**	**20,000**				**44,000**

Funding Sources	FY '23	FY '24	FY '25	FY '26	FY '27	Total
030 - CIP FUND	24,000	20,000				44,000
Total	**24,000**	**20,000**				**44,000**

Budget Impact/Other

Need to replace servers and related licensing to keep accounting software running.

Budget Items	FY '23	FY '24	FY '25	FY '26	FY '27	Total
5740.000: COMPUTER EQUIPMENT =>5,000	15,000	11,000				26,000
5741.000: COMPUTER SOFTWARE=>5,000	9,000	9,000				18,000
Total	**24,000**	**20,000**				**44,000**

City Capital Plan Equipment Replacment

FY '23 *thru* FY '27

City of Marshalltown, Iowa

Department INFORMATION SYSTEMS
Contact Diana Steiner

Project # SERVERS-PD
Project Name SERVERS-PD (Evidence)

Type Equipment
Useful Life 5 years
Category 0306070 CIP-IT DATAPROCE

Division INFORMATION TECHNOLO
Object 5733.000 COMPUTER EQUIP
Priority Critical
Location CITY HALL
Status Active
Total Project Cost: **$64,024**

Description

This server is for PD evidence and the ld body camera footage (new body camera footage has its own project. Servers last 5-7 years.

FY25 Server equipment $15,000

Justification

The police departments needs for data storage increases significantly each year. The cost estimates listed in this budget are very general and are subject to change as our electronic storage needs evolve.

Expenditures	FY '23	FY '24	FY '25	FY '26	FY '27	Total
Equip/Vehicles/Furnishings			15,000			15,000
Total			**15,000**			**15,000**

Funding Sources	FY '23	FY '24	FY '25	FY '26	FY '27	Total
030 - CIP FUND			15,000			15,000
Total			**15,000**			**15,000**

Budget Impact/Other

Servers need to be replaced every 5-7 years.

City Capital Plan Equipment Replacment

FY '23 *thru* FY '27

City of Marshalltown, Iowa

Department LIBRARY
Contact Sarah Rosenblum

Project # 11
Project Name Upgraded Automation System

Type Equipment
Useful Life 10 years
Category 1102010 RUT-STR MAINTEN

Division state
Object 5340.100 CONTRACT - OTHE
Priority Critical
Location Library
Status Active
Total Project Cost: $234,398

Description

The Library's Integrated Library System (ILS) is the technical backbone of the library. It is used to track books and other materials owned, orders made, bills paid and library users who have checked out materials. Our ILS includes the following components:

Cataloging (classifying and indexing all library materials)
Circulation (tracks all materials borrowed and returned)
OPAC (public online card catalog for library user to locate material)

Budgeted 3% increase every year

Justification

The Library's Integrated Library System (ILS) is the technical backbone of the library. It is used to track books and other materials owned, orders made, bills paid and library users who have checked out materials. Our ILS includes the following components:

Cataloging (classifying and indexing all library materials)
Circulation (tracks all materials borrowed and returned)
OPAC (public online card catalog for library user to locate material)

Budgeted 3% increase every year

Expenditures	FY '23	FY '24	FY '25	FY '26	FY '27	Total
Equip/Vehicles/Furnishings	19,462	20,435	21,457	22,530	23,656	107,540
Total	**19,462**	**20,435**	**21,457**	**22,530**	**23,656**	**107,540**

Funding Sources	FY '23	FY '24	FY '25	FY '26	FY '27	Total
030 - CIP FUND	19,462	20,435	21,457	22,530	23,656	107,540
Total	**19,462**	**20,435**	**21,457**	**22,530**	**23,656**	**107,540**

Budget Impact/Other

Assume 5% increase annually

City Capital Plan Equipment Replacment

FY '23 *thru* FY '27

City of Marshalltown, Iowa

Department LIBRARY
Contact
Type Unassigned
Useful Life
Category 0011010 GEN'L-POLICE ADM
Priority Not Applicable
Status Active
Total Project Cost: **$100,000**

Project # **LIB2022**
Project Name **Library Emergency Generator Project**

Division
Location
Object

Description

The Library would like to purchase an emergency generator which would power the library in event of prolonged outage due to weather or other technical issues. In consultation with the Public Works Department, this generator would be diesel powered and would allow the library to function and serve the community during a weather related event such as an ice storm, wind shear or even another tornado.

Justification

In the aftermath of the EF3 tornado that struck Marshalltown on July 19, 2018 a large portable generator was delivered to the library on the next day which allowed the library to be up and running by that same day. During that weekend period, City Hall staff were able to move their operations to the library for the next month while repairs were done to their building. Prior to this event, library and public works staff have been planning to propose a large scale generator for the library in case of a prolonged outage.

A generator would allow the library to operate as a community assistance center when another event happens to our town. Having power would allow community members to charge electronic devices, obtain information and contact family members. If necessary, city staff could again occupy library space if needed. In case of a FEMA type disaster, community members could begin the online process of working with FEMA and their insurance companies.

Expenditures	FY '23	FY '24	FY '25	FY '26	FY '27	Total
Equip/Vehicles/Furnishings			100,000			100,000
Total			**100,000**			**100,000**

Funding Sources	FY '23	FY '24	FY '25	FY '26	FY '27	Total
031 - BUILDING MAINTENANCE			100,000			100,000
Total			**100,000**			**100,000**

Budget Impact/Other

Need to get an engineering estimate for what this would cost.

At some point in the 2020/2021 timeframe, Dave Daters and Sarah had discussed $80,000. Based on similarities between this and and the coliseum estimate that was preparred at the same time, the cost could be almost double.

This generator would benefit the community for a number of years and be an essential backup for our residents.

Budget Items	FY '23	FY '24	FY '25	FY '26	FY '27	Total
5750.000: OTHER CAPITAL EQUIPMENT=>5,000			100,000			100,000
Total			**100,000**			**100,000**

City Capital Plan Equipment Replacment

FY '23 *thru* FY '27

City of Marshalltown, Iowa

Department LIBRARY
Contact Sarah Rosenblum

Project # LIB2023
Project Name Garage for Mobile Outreach Vehicle

Type Improvement
Useful Life 30 years
Category 0014010 GEN'L-LIBRARY
Priority Very Important
Status Active
Total Project Cost: $100,000

Division
Location
Object

Description

The Friends of the Library will be donating funds to enable the Library to build an accessory building on the northwest corner of the library block. This accessory building will house the Library's new Mobile Outreach Vehicle which should arrive in early winter of 2022. After input from the Marshalltown Chief of Police and the Marshalltown Transportation Director it was decided in order to keep the vehicle secure from theft and possible vandalism and to extend the life of the vehicle a place to house the vehicle was necessary. The Library Director also consulted with other cities that have a similar vehicle and it was highly recommended to have a safe and secure place to store the vehicle. The original estimate was $75,000, but would like to increase it to $100,000 to include solar panels. The Friends of the Library will reimburse the City for the entire amount.

The Friends will donate the funds and the City will manage the project to construct the accessory building.

Justification

The Friends of the Library will be donating funds to enable the Library to build an accessory building on the northwest corner of the library block. This accessory building will house the Library's new Mobile Outreach Vehicle which should arrive in early winter of 2022. After input from the Marshalltown Chief of Police and the Marshalltown Transportation Director it was decided in order to keep the vehicle secure from theft and possible vandalism and to extend the life of the vehicle a place to house the vehicle was necessary. The Library Director also consulted with other cities that have a similar vehicle and it was highly recommended to have a safe and secure place to store the vehicle. The original estimate was $75,000, but would like to increase it to $100,000 to include solar panels. The Friends of the Library will reimburse the City for the entire amount.

Expenditures	FY '23	FY '24	FY '25	FY '26	FY '27	Total
Buildings		100,000				100,000
Total		**100,000**				**100,000**

Funding Sources	FY '23	FY '24	FY '25	FY '26	FY '27	Total
170 - LIBRARY GIFT FUND		100,000				100,000
Total		**100,000**				**100,000**

Budget Impact/Other

The Friends of the Library will fund the construction of the garage.

Budget Items	FY '23	FY '24	FY '25	FY '26	FY '27	Total
5776.000: BUILDINGS & IMPROVEMENTS=>5,000		100,000				100,000
Total		**100,000**				**100,000**

City Capital Plan Equipment Replacment

FY '23 *thru* FY '27

City of Marshalltown, Iowa

Department LIBRARY
Contact
Type Unassigned
Useful Life
Category 0011010 GEN'L-POLICE ADM
Priority Not Applicable
Status Active
Total Project Cost: **$800,000**

Project # **LIBinterior**
Project Name **Library Interior Renovation**

Division
Location
Object

Description

The library will begin planning an interior renovation within the existing footprint of the building. We are planning to build a "board" type meeting room and several smaller meeting rooms. We continue to see a demand for places for community members to meet both individually and in small groups. This project will be funded by the Friends of the Marshalltown Library and donations.

Amend 2023 CIP $100,000
2024 CIP $700,000

Justification

The library will begin planning an interior renovation within the existing footprint of the building. We are planning to build a "board" type meeting room and several smaller meeting rooms. We continue to see a demand for places for community members to meet both individually and in small groups. This project will be funded by the Friends of the Marshalltown Library and donations.

Amend 2023 CIP $100,000
2024 CIP $700,000

Expenditures	FY '23	FY '24	FY '25	FY '26	FY '27	Total
Construction	100,000	700,000				800,000
Total	**100,000**	**700,000**				**800,000**

Funding Sources	FY '23	FY '24	FY '25	FY '26	FY '27	Total
170 - LIBRARY GIFT FUND	100,000	700,000				800,000
Total	**100,000**	**700,000**				**800,000**

Budget Impact/Other

This will be funded by the Friends of the library and donations. Budgeted costs are $100,000 for FY23 and $700,000 for FY24.

Budget Items	FY '23	FY '24	FY '25	FY '26	FY '27	Total
5342.000: CONTRACT-OUTSIDE HELP	100,000	700,000				800,000
Total	**100,000**	**700,000**				**800,000**

City Capital Plan Equipment Replacment

FY '23 *thru* FY '27

City of Marshalltown, Iowa

Department LIBRARY
Contact Sarah Rosenblum
Type Unassigned
Useful Life
Category 0014010 GEN'L-LIBRARY
Priority Not Applicable
Status Active
Total Project Cost: **$45,000**

Project # **LIBsidewalks**
Project Name **Sidewalks by library building and Boone St.**

Division
Location
Object

Description

Concrete repair and replacement for large sections of the private sidewalks of the library building and the public sidewalk on Boone. The library's sidewalks are heavily traveled by pedestrians who walk, take the bus or drive to the library. There are major slabs that need to be replaced. This was a project on the radar of the prior facility manager and then postponed due to the tornado and Covid. Estimating $45,000 for the project ($35,000 for library and $10,000 for Boone St.)

Justification

Concrete repair and replacement for large sections of the private sidewalks of the library building and the public sidewalk on Boone. The library's sidewalks are heavily traveled by pedestrians who walk, take the bus or drive to the library. There are major slabs that need to be replaced. This was a project on the radar of the prior facility manager and then postponed due to the tornado and Covid. Estimating $45,000 for the project ($35,000 for library and $10,000 for Boone St.)

Expenditures	FY '23	FY '24	FY '25	FY '26	FY '27	Total
Construction		45,000				45,000
Total		**45,000**				**45,000**

Funding Sources	FY '23	FY '24	FY '25	FY '26	FY '27	Total
031 - BUILDING MAINTENANCE		45,000				45,000
Total		**45,000**				**45,000**

Budget Impact/Other

$45,000 in expenses ($35,000 for the Library's sidewalks and $10,000 on Boone St.)

Budget Items	FY '23	FY '24	FY '25	FY '26	FY '27	Total
5410.000: REPAIRS / MAINTENANCE		45,000				45,000
Total		**45,000**				**45,000**

City Capital Plan Equipment Replacment

FY '23 *thru* FY '27

City of Marshalltown, Iowa

Department LIBRARY
Contact Sarah Rosenblum
Type Unassigned
Useful Life
Category 0014010 GEN'L-LIBRARY
Priority Not Applicable
Status Active
Total Project Cost: **$400,000**

Project # **LIBsolar**
Project Name **Library Solar Panels**

Division
Location
Object

Description

The library would like to replace and upgrade its nonfunctioning solar panels. If the library installed new and expanded solar panels,it is projected that we could reduce our $40,000 a year Alliant bill down to $3,000 a year for a cost savings of $37,000 per year. Also our electricity costs would remain relatively stable in coming years. The City is now eligible for Federal tax credits which would rebate us 30% of the cost of the solar panels. The return on investment is approximately 7 years. The library was the first newly built Gold LEED certified library in the state of Iowa. Replacing our solar panels would be extremely cost effective and keep in the spirit in which the building was designed and built.

Projected costs:

Equipment
$375,000 (before rebate)
262,500 (after 30% rebate)

Engineering
$25,000

Justification

The library would like to replace and upgrade its nonfunctioning solar panels. If the library installed new and expanded solar panels,it is projected that we could reduce our $40,000 a year Alliant bill down to $3,000 a year for a cost savings of $37,000 per year. Also our electricity costs would remain relatively stable in coming years. The City is now eligible for Federal tax credits which would rebate us 30% of the cost of the solar panels. The return on investment is approximately 7 years. The library was the first newly built Gold LEED certified library in the state of Iowa. Replacing our solar panels would be extremely cost effective and keep in the spirit in which the building was designed and built.

Projected costs:

Equipment:
$375,000 (before rebate)
262,500 (after 30% rebate)

Engineering
$25,000

Expenditures	FY '23	FY '24	FY '25	FY '26	FY '27	Total
Equip/Vehicles/Furnishings			400,000			400,000
Total			**400,000**			**400,000**

Funding Sources	FY '23	FY '24	FY '25	FY '26	FY '27	Total
353 - CAPITAL PROJECTS			400,000			400,000
Total			**400,000**			**400,000**

Budget Impact/Other

Costs upfront but will pay for itself with lower annual electricity costs (return on investment is approximately 7 years). Then continued annual savings of $37,000

$375,000 will be spent for the equipment and then $112,500 be received when the rebate is filed.

$25,000 is budgeted for engineering.

City Capital Plan Equipment Replacment

FY '23 *thru* FY '27

Department LIBRARY

City of Marshalltown, Iowa

Contact Sarah Rosenblum

Budget Items	FY '23	FY '24	FY '25	FY '26	FY '27	Total
5750.000: OTHER CAPITAL EQUIPMENT=>5,000		400,000				400,000
Total		**400,000**				**400,000**

City Capital Plan Equipment Replacment

FY '23 *thru* FY '27

City of Marshalltown, Iowa

Department LIBRARY
Contact Sarah Rosenblum
Type Unassigned
Useful Life
Category 0014010 GEN'L-LIBRARY
Priority Not Applicable
Status Active
Total Project Cost: **$189,342**

Project # **LIBVEH**
Project Name **Mobile Services Outreach Unit**

Division
Location
Object

Description

The purchase of this Mobile Outreach Services Unit would allow us to bring out collections, Internet access and digital literacy through hot spots and devices, programming materials, and target resources to the schools, assisted living facilities and community events like the Farmer's Market, 13th Street events, County Fair, etc.

Contract to manufacture vehicle is $189,342. CIP will pay $148,595 and donations/grants will pay for $40,747.

Justification

We will measure our results by keeping the same kinds of data that we would for "in library" use: library card users registered (with a sortable "outreach" field added in our registration system), number of people attending programming and checking out, number of items checked out, reference questions asked.

Contract to manufacture vehicle is $189,342 CIP will pay $148,595 and donations/grants will pay for remainder.

Expenditures	FY '23	FY '24	FY '25	FY '26	FY '27	Total
Equip/Vehicles/Furnishings	102,236					102,236
Total	**102,236**					**102,236**

Funding Sources	FY '23	FY '24	FY '25	FY '26	FY '27	Total
030 - CIP FUND	61,489					61,489
170 - LIBRARY GIFT FUND	40,747					40,747
Total	**102,236**					**102,236**

Budget Impact/Other

This project would create annual vehicle maintenance costs, which the Library intends to seek sponsorships for.

The total vehichle cost is $189,342, of which $40,747 is targeted for grants and donations to support the purchase cost.

Budget Items	FY '23	FY '24	FY '25	FY '26	FY '27	Total
5750.000: OTHER CAPITAL EQUIPMENT=>5,000	102,236					102,236
Total	**102,236**					**102,236**

City Capital Plan Equipment Replacment

FY '23 *thru* FY '27

City of Marshalltown, Iowa

Department PARK & RECREATION
Contact Geoff Hubbard
Type Maintenance
Useful Life
Category 0304045 CIP-POOL
Priority Very Important
Status Active
Total Project Cost: **$160,000**

Project # **20PR0009**
Project Name **Aquatic Center Improvements**

Division PARKS
Object 5410.000 REPAIRS/MAINT
Location Aquatic Center

Description

Annual Maintenance, Repairs, and Replacement of Aquatic Center items like diving board, pool pumps and motors, deck chairs, lifeguard stands, chemical controllers, etc.

Justification

There is ongoing repairs and replacement of equipment to keep the pool running efficiently.

Expenditures	FY '23	FY '24	FY '25	FY '26	FY '27	Total
Maintenance	20,000	20,000	20,000	20,000	20,000	100,000
Total	**20,000**	**20,000**	**20,000**	**20,000**	**20,000**	**100,000**

Funding Sources	FY '23	FY '24	FY '25	FY '26	FY '27	Total
030 - CIP FUND	20,000	20,000	20,000	20,000	20,000	100,000
Total	**20,000**	**20,000**	**20,000**	**20,000**	**20,000**	**100,000**

Budget Impact/Other

City Capital Plan Equipment Replacment

FY '23 *thru* FY '27

City of Marshalltown, Iowa

Department PARK & RECREATION
Contact Geoff Hubbard
Type Maintenance
Useful Life
Category 0304030 CIP-Parks
Priority Very Important
Status Active
Total Project Cost: **$365,000**

Project # **20PR002**
Project Name **Sidewalk and Trail Maintenance**

Division PARKS
Object
Location

Description

This project is to replace sections of trails and sidewalks in parks identified as the highest priority areas as identified in the ADA Transition Plan.

Justification

Expenditures	FY '23	FY '24	FY '25	FY '26	FY '27	Total
Maintenance	50,000	15,000	50,000	50,000	50,000	215,000
Total	**50,000**	**15,000**	**50,000**	**50,000**	**50,000**	**215,000**

Funding Sources	FY '23	FY '24	FY '25	FY '26	FY '27	Total
030 - CIP FUND	50,000	15,000	50,000	50,000	50,000	215,000
Total	**50,000**	**15,000**	**50,000**	**50,000**	**50,000**	**215,000**

Budget Impact/Other

Budget Items	FY '23	FY '24	FY '25	FY '26	FY '27	Total
5348.000: CONTRACT - OTHER	50,000					50,000
Total	**50,000**					**50,000**

City Capital Plan Equipment Replacment

FY '23 *thru* FY '27

City of Marshalltown, Iowa

Department PARK & RECREATION
Contact

Project # 21ColAlley
Project Name Pickleball Pocket Park

Type Unassigned
Useful Life
Category 0014030 GEN'L-PARKS
Priority Not Applicable
Status Active
Total Project Cost: **$189,226**

Division
Location
Object

Description

The area behind City Hall/Carnegie Building needs to be restored to a functional space that can provide a benefit to Downtown Marshalltown. This project includes many facets to make this space a destination for recreation and accessibility while also enhancing the experience of those visiting the Coliseum.

The scope of the project includes installation a pickleball court and a walkable alley to include lighting, public art, stormwater improvements, benches and other fixtures, and repairing/replacing the existing asphalt in the alley and parking area.

Justification

This is an area that has not had a lot of attention since the tornado. With the opening of the Coliseum in 2020, we want to provide an aesthetic enhancement to the area while creating a place for people to gather and recreate while also handling a large amount of stormwater in the area.

Expenditures	FY '23	FY '24	FY '25	FY '26	FY '27	Total
Construction	9,209					9,209
Total	**9,209**					**9,209**

Funding Sources	FY '23	FY '24	FY '25	FY '26	FY '27	Total
030 - CIP FUND	9,209					9,209
Total	**9,209**					**9,209**

Budget Impact/Other

Pillar's bid was $152,825, with design and other items related to the poetry aspect of the project costing $30,541. Here is the breakdown by funding source:

CIP Fund: $100,749
Grants: $28,000
Stormwater: $54,617

City Capital Plan Equipment Replacment

FY '23 *thru* FY '27

City of Marshalltown, Iowa

Department PARK & RECREATION
Contact Geoff Hubbard
Type Equipment
Useful Life
Category 403410 P/R CAP PRJCTS
Priority Very Important
Status Active
Total Project Cost: **$176,994**

Project # **21PR004**
Project Name **Elks Park Improvements**

Division
Location
Object

Description

Elks Park, a priority park, is in need of some updates to enhance the usability of the park. Improvements include new playground equipment, sidewalks, park sign, grading, and other improvements. We have received a grant of $66,250 from Iowa Econ Development and the remaining $110,000 will be paid with the CIP levy..

Justification

This addresses repair and maintnance issues and is a recommendation of the Master Plan.

Expenditures	FY '23	FY '24	FY '25	FY '26	FY '27	Total
Construction	172,794					172,794
Total	**172,794**					**172,794**

Funding Sources	FY '23	FY '24	FY '25	FY '26	FY '27	Total
030 - CIP FUND	110,432					110,432
132 - MISC CAPITAL GRANTS	62,362					62,362
Total	**172,794**					**172,794**

Budget Impact/Other

Capital Improvement Levy funds are supporting $110,000 of the project. A CDBG-CV grant was also awarded for other elements of the project.

Budget Items	FY '23	FY '24	FY '25	FY '26	FY '27	Total
5342.000: CONTRACT-OUTSIDE HELP	66,250					66,250
5750.000: OTHER CAPITAL EQUIPMENT=>5,000	110,000					110,000
Total	**176,250**					**176,250**

City Capital Plan Equipment Replacment

FY '23 *thru* FY '27

City of Marshalltown, Iowa

Department PARK & RECREATION
Contact Geoff Hubbard
Type Unassigned
Useful Life
Category 0304030 CIP-Parks
Priority Not Applicable
Status Active
Total Project Cost: **$27,500**

Project # **22PR002**
Project Name **Replace Mower 823**

Division PARKS
Object
Location

Description

Replacement of mowers every 8 years

Justification

Replacement of mowers every 8 years

Expenditures	FY '23	FY '24	FY '25	FY '26	FY '27	Total
Equip/Vehicles/Furnishings	27,500					27,500
Total	**27,500**					**27,500**

Funding Sources	FY '23	FY '24	FY '25	FY '26	FY '27	Total
030 - CIP FUND	27,500					27,500
Total	**27,500**					**27,500**

Budget Impact/Other

City Capital Plan Equipment Replacment

FY '23 *thru* FY '27

City of Marshalltown, Iowa

Department PARK & RECREATION
Contact Geoff Hubbard

Project # 22PR006
Project Name Kiwanis Park Improvements

Type Improvement
Useful Life
Category 0304030 CIP-Parks
Priority Important
Status Active
Total Project Cost: $250,000

Division PARKS
Object
Location

Description

Replace the basketball court at Kiwanis Court along with adding sidewalks, lighting, and replacing playground equipment. If budget allows, update the shelter.

Justification

The ashphalt court at Kiwanis has numerous cracks and holes in the court and needs to be replaced. The Parks and Rec Master Plan recommends making safety and accessibility enhancements to all parks.

Expenditures	FY '23	FY '24	FY '25	FY '26	FY '27	Total
Planning & Design Engineering	35,000					35,000
Construction	215,000					215,000
Total	**250,000**					**250,000**

Funding Sources	FY '23	FY '24	FY '25	FY '26	FY '27	Total
363- 2021 GO BOND	250,000					250,000
Total	**250,000**					**250,000**

Budget Impact/Other

City Capital Plan Equipment Replacment

FY '23 *thru* FY '27

City of Marshalltown, Iowa

Department PARK & RECREATION
Contact Geoff Hubbard

Project # 23PR004
Project Name Water Plaza (Linn Creek District)

Type Improvement
Useful Life
Category 0014030 GEN'L-PARKS
Priority Important
Status Active
Total Project Cost: $500,000

Division
Location
Object

Description

The City hired Bolton and Menk to complete a site plan and concept for a Water Plaza to be located in the heart of the Linn Creek District, between MEGA-10 Park, the Aquatic Center and the YMCA.

Justification

The Water Plaza would add to the quality of life for the community, serving a wide number of individuals of all ages, ethnicities, and abilities. This is also consistent with the Parks Master Plan.

Expenditures	FY '23	FY '24	FY '25	FY '26	FY '27	Total
Planning & Design Engineering	50,000					50,000
Construction	450,000					450,000
Total	**500,000**					**500,000**

Funding Sources	FY '23	FY '24	FY '25	FY '26	FY '27	Total
364- 2022 GO BOND	500,000					500,000
Total	**500,000**					**500,000**

Budget Impact/Other

City Capital Plan Equipment Replacment

FY '23 *thru* FY '27

City of Marshalltown, Iowa

Department PARK & RECREATION
Contact Geoff Hubbard
Type Unassigned
Useful Life
Category 0304030 CIP-Parks
Priority Not Applicable
Status Active
Total Project Cost: **$52,000**

Project # **23PR007**
Project Name **Replace Truck 811 and Snow Blade**

Division PARKS
Object
Location

Description

Replace Truck 811 and Snow Blade

Justification

Replace trucks every 10 years

Expenditures	FY '23	FY '24	FY '25	FY '26	FY '27	Total
Equip/Vehicles/Furnishings	52,000					52,000
Total	**52,000**					**52,000**

Funding Sources	FY '23	FY '24	FY '25	FY '26	FY '27	Total
030 - CIP FUND	52,000					52,000
Total	**52,000**					**52,000**

Budget Impact/Other

City Capital Plan Equipment Replacment

FY '23 *thru* FY '27

City of Marshalltown, Iowa

Department PARK & RECREATION
Contact Geoff Hubbard
Type Unassigned
Useful Life
Category 0304030 CIP-Parks
Priority Not Applicable
Status Active
Total Project Cost: **$28,250**

Project # **23PR008**
Project Name **Replace Mower 712**

Division PARKS
Object
Location

Description

Replace Mower 712, mower only

Justification

Replacement of mowers every 8 years.

Expenditures	FY '23	FY '24	FY '25	FY '26	FY '27	Total
Equip/Vehicles/Furnishings	28,250					28,250
Total	**28,250**					**28,250**

Funding Sources	FY '23	FY '24	FY '25	FY '26	FY '27	Total
030 - CIP FUND	28,250					28,250
Total	**28,250**					**28,250**

Budget Impact/Other

City Capital Plan Equipment Replacment

FY '23 *thru* FY '27

City of Marshalltown, Iowa

Department PARK & RECREATION
Contact

Project # 23PR009
Project Name Riverview Park Improvements

Type Improvement
Useful Life
Category 0304030 CIP-Parks
Priority Very Important
Status Active
Total Project Cost: $12,300,000

Division
Location
Object

Description

River Park is one of the most used parks in our system. It is also the entrance to Marshalltown coming from the north. The derecho changed the landscape of the park with the destruction of so many trees, which led to a new Master Plan for a complete renovation of the park. Phase 1 for 2023 includes work on the existing detention ponds and the creation of new detention space to help prevent the overtopping of Woodland Drive in flood situations.

Phase 2 includes the creation of a Community Festival Grounds, with a pavilion and other site amenities to host large events.

Phase 3 includes the campground improvements at $5 million. Staff is recommending a delay in scheduling this work, as it might not be necessary at the proposed level given other improvements likely to occur with the County.

Phase 4 is the renovation of the Dog Park.

Phase 5 is the creation of new roadways and parking areas and the paving of all existing roads and parking lots.

Phase 6 is all new playground equipment at each of the existing play sites.

Phase 7 includes the addition of more sidewalks throughout the park to connect the different areas together.

Phase 8 is a pickleball facility.

Justification

These improvements are part of the Parks and Recreation Master Plan along with the new Riverview Park Master Plan.

Expenditures	FY '23	FY '24	FY '25	FY '26	FY '27	Total
Planning & Design Engineering	250,000		500,000		300,000	1,050,000
Construction	2,250,000		2,700,000	500,000	2,750,000	8,200,000
Total	**2,500,000**		**3,200,000**	**500,000**	**3,050,000**	**9,250,000**

Funding Sources	FY '23	FY '24	FY '25	FY '26	FY '27	Total
353 - CAPITAL PROJECTS			3,200,000	500,000	3,050,000	6,750,000
364- 2022 GO BOND	2,500,000					2,500,000
Total	**2,500,000**		**3,200,000**	**500,000**	**3,050,000**	**9,250,000**

Budget Impact/Other

The proposed funding source at this time is GO Bonds. Some grants are likely in the future phases. Phase 1 was part of the 2022 GO Bond, at $2.5 million.

Phase 2 is proposed as part of the FY25 bond at $3.2 million.
Phase 3 is not programmed in, as a lesser scope of work is being explored.
Phase 4 is proposed as part of the FY26 bond at $500,000.
Phase 5 is proposed as part of the FY27 bond at $2.05 million
Phase 6 is proposed as part of the FY28 bond at $2 million

City Capital Plan Equipment Replacment

FY '23 *thru* FY '27

City of Marshalltown, Iowa

Department PARK & RECREATION
Contact

Project # 23PR010
Project Name Peterson Park Improvements

Type Improvement
Useful Life
Category 0014030 GEN'L-PARKS
Priority Important
Status Active
Total Project Cost: $120,000

Division PARKS
Object
Location

Description

Peterson Park has play equipment over 15 years and needs replaced. Additional sidewalks and lighting is needed to make the park more accessible. The project would include a new entrance sign.

Justification

This project was identified as a priority park in the Parks Master Plan.

Expenditures	FY '23	FY '24	FY '25	FY '26	FY '27	Total
Construction	120,000					120,000
Total	**120,000**					**120,000**

Funding Sources	FY '23	FY '24	FY '25	FY '26	FY '27	Total
030 - CIP FUND	120,000					120,000
Total	**120,000**					**120,000**

Budget Impact/Other

City Capital Plan Equipment Replacment

FY '23 *thru* FY '27

City of Marshalltown, Iowa

Department PARK & RECREATION
Contact

Project # 23PR011
Project Name West End Park Improvements Phase II

Type Improvement
Useful Life
Category 0014030 GEN'L-PARKS
Priority Important
Status Active
Total Project Cost: $1,300,000

Division PARKS
Object
Location

Description

The second phase of the westend project includes the restroom/concession/tornado shelter building and utilities and other items necessary for the building. A third phase has been created to capture parking improvements and site amenities.

Justification

The West End Park project was approved by Council in September 2019 and is consistent with recommendations in the Parks Master Plan.

Expenditures	FY '23	FY '24	FY '25	FY '26	FY '27	Total
Construction	600,000		700,000			1,300,000
Total	**600,000**		**700,000**			**1,300,000**

Funding Sources	FY '23	FY '24	FY '25	FY '26	FY '27	Total
353 - CAPITAL PROJECTS			700,000			700,000
364- 2022 GO BOND	600,000					600,000
Total	**600,000**		**700,000**			**1,300,000**

Budget Impact/Other

The proposed funding source is General Obligation bonds, but we would seek grant funds for parts of the project as applicable.

City Capital Plan Equipment Replacment

FY '23 *thru* FY '27

City of Marshalltown, Iowa

Department PARK & RECREATION
Contact Geoff Hubbard

Project # 24PR001
Project Name Parks Wayfinding Signs

Type Improvement
Useful Life
Category 0014030 GEN'L-PARKS
Priority Important
Status Active
Total Project Cost: $50,000

Division PARKS
Object 5340.010 CONTRACT-OUTSID
Location

Description

The Parks Master Plan calls out for uniform signage at the parks in accordance with the City Wayfinding Sign Plan. This would allow for 10 signs to be placed in parks.

Justification

This project addresses issues in the parks master plan with accessibility and access, along with the City's master wayfinding plan.

Expenditures	FY '23	FY '24	FY '25	FY '26	FY '27	Total
Construction		50,000				50,000
Total		**50,000**				**50,000**

Funding Sources	FY '23	FY '24	FY '25	FY '26	FY '27	Total
030 - CIP FUND		50,000				50,000
Total		**50,000**				**50,000**

Budget Impact/Other

City Capital Plan Equipment Replacment

FY '23 *thru* FY '27

City of Marshalltown, Iowa

Department PARK & RECREATION
Contact Geoff Hubbard
Type Unassigned
Useful Life
Category 0304030 CIP-Parks
Priority Not Applicable
Status Active
Total Project Cost: **$40,000**

Project # **24PR003**
Project Name **Replace Truck 813 - 1 Ton Truck w/box**

Division PARKS
Object
Location

Description

Replace Truck 813 - 1 Ton Truck w/box

Justification

Truck 813 is over 10 years old and should be replaced

Expenditures	FY '23	FY '24	FY '25	FY '26	FY '27	Total
Equip/Vehicles/Furnishings		40,000				40,000
Total		**40,000**				**40,000**

Funding Sources	FY '23	FY '24	FY '25	FY '26	FY '27	Total
145- TORNADO DISASTER FUND		40,000				40,000
Total		**40,000**				**40,000**

Budget Impact/Other

City Capital Plan Equipment Replacment

FY '23 *thru* FY '27

City of Marshalltown, Iowa

Department PARK & RECREATION
Contact Geoff Hubbard
Type Unassigned
Useful Life
Category 0011010 GEN'L-POLICE ADM
Priority Not Applicable
Status Active
Total Project Cost: **$40,000**

Project # **24PR004**
Project Name **Replace Mower 714 w/Snow Equipment**

Division PARKS
Object
Location

Description

Replace Mower 714 w/Snow Equipment

Justification

Replace mowers every 8 years and include snow removal equipment for downtown and library sidewalks

Expenditures	FY '23	FY '24	FY '25	FY '26	FY '27	Total
Equip/Vehicles/Furnishings		40,000				40,000
Total		**40,000**				**40,000**

Funding Sources	FY '23	FY '24	FY '25	FY '26	FY '27	Total
030 - CIP FUND		25,000				25,000
110 - ROAD USE TAX $		15,000				15,000
Total		**40,000**				**40,000**

Budget Impact/Other

City Capital Plan Equipment Replacment

FY '23 *thru* FY '27

City of Marshalltown, Iowa

Department PARK & RECREATION
Contact Geoff Hubbard
Type Equipment
Useful Life
Category 0304030 CIP-Parks
Priority Very Important
Status Active
Total Project Cost: **$70,000**

Project # **24PR005**
Project Name **Timber Creek Park Bathroom**

Division PARKS
Object
Location

Description

Remove old playground equipment at Peterson Park and add new equipment and pave access to recreation trail (Trailhead Park) as per Master Plan.

Justification

This is a trailhead park and needs to have appropriate amenities as per the Master Plan.

Expenditures	FY '23	FY '24	FY '25	FY '26	FY '27	Total
Equip/Vehicles/Furnishings		70,000				70,000
Total		**70,000**				**70,000**

Funding Sources	FY '23	FY '24	FY '25	FY '26	FY '27	Total
030 - CIP FUND		70,000				70,000
Total		**70,000**				**70,000**

Budget Impact/Other

Budget Items	FY '23	FY '24	FY '25	FY '26	FY '27	Total
5750.000: OTHER CAPITAL EQUIPMENT=>5,000	70,000					70,000
Total	**70,000**					**70,000**

City Capital Plan Equipment Replacment

FY '23 *thru* FY '27

City of Marshalltown, Iowa

Department PARK & RECREATION
Contact Geoff Hubbard

Project # 25PR001
Project Name Jaycees Park Improvements

Type Improvement
Useful Life
Category 0014030 GEN'L-PARKS
Priority Important
Status Active
Total Project Cost: $150,000

Division PARKS
Object 5340.010 CONTRACT-OUTSID
Location

Description

The Park and Rec Master Plan called out several priority parks that need improvements including lighting, amenities, sidewalks, and signage. This project will address all of those.

Justification

Address priority park improvements to BPW Park per the Park & Rec Master Plan.

Expenditures	FY '23	FY '24	FY '25	FY '26	FY '27	Total
Planning & Design Engineering			20,000			20,000
Construction			130,000			130,000
Total			**150,000**			**150,000**

Funding Sources	FY '23	FY '24	FY '25	FY '26	FY '27	Total
030 - CIP FUND			150,000			150,000
Total			**150,000**			**150,000**

Budget Impact/Other

City Capital Plan Equipment Replacment

FY '23 *thru* FY '27

City of Marshalltown, Iowa

Department PARK & RECREATION
Contact Geoff Hubbard

Project # 25PR002
Project Name Vehicle/Mower Replacement

Type Improvement
Useful Life
Category 0014030 GEN'L-PARKS
Priority Important
Status Active
Total Project Cost: $50,000

Division PARKS
Object 5340.010 CONTRACT-OUTSID
Location

Description

The Park & Rec Master Plan called for improvementst to several parks including Lawerence Park to address accessibility, lighting, and updating the features like the play equipment and basketball court.

Justification

The Park & Rec Master Plan called for improvements to several parks including Lawerence Park.

Expenditures	FY '23	FY '24	FY '25	FY '26	FY '27	Total
Equip/Vehicles/Furnishings			50,000			50,000
Total			**50,000**			**50,000**

Funding Sources	FY '23	FY '24	FY '25	FY '26	FY '27	Total
030 - CIP FUND			50,000			50,000
Total			**50,000**			**50,000**

Budget Impact/Other

City Capital Plan Equipment Replacment

FY '23 *thru* FY '27

City of Marshalltown, Iowa

Department PARK & RECREATION
Contact Geoff Hubbard

Project # 26PR001
Project Name Arnolds Park Improvements

Type Improvement
Useful Life 20 years
Category 0014030 GEN'L-PARKS
Priority Important
Status Active
Total Project Cost: $150,000

Division PARKS
Object 5340.010 CONTRACT-OUTSID
Location

Description

Improvements to Arnolds Park per the Park & Recreation Master Plan

Justification

The park has old outdate equipment, no accessible sidewalks to amenities and needs updated sign and lighting for security

Expenditures	FY '23	FY '24	FY '25	FY '26	FY '27	Total
Equip/Vehicles/Furnishings				150,000		150,000
Total				**150,000**		**150,000**

Funding Sources	FY '23	FY '24	FY '25	FY '26	FY '27	Total
030 - CIP FUND				150,000		150,000
Total				**150,000**		**150,000**

Budget Impact/Other

Budget Items	FY '23	FY '24	FY '25	FY '26	FY '27	Total
5342.000: CONTRACT-OUTSIDE HELP				150,000		150,000
Total				**150,000**		**150,000**

City Capital Plan Equipment Replacment

FY '23 *thru* FY '27

City of Marshalltown, Iowa

Department PARK & RECREATION
Contact Geoff Hubbard

Project # 26PR003
Project Name Vehicle/Mower Replacement

Type Equipment
Useful Life 10 years
Category 0304030 CIP-Parks
Priority Important
Status Active
Total Project Cost: $50,000

Division
Location
Object

Description

Replace a vehicle/mower

Justification

Expenditures	FY '23	FY '24	FY '25	FY '26	FY '27	Total
Equip/Vehicles/Furnishings				50,000		50,000
Total				**50,000**		**50,000**

Funding Sources	FY '23	FY '24	FY '25	FY '26	FY '27	Total
030 - CIP FUND				50,000		50,000
Total				**50,000**		**50,000**

Budget Impact/Other

City Capital Plan Equipment Replacment

FY '23 *thru* FY '27

City of Marshalltown, Iowa

Department PARK & RECREATION
Contact Geoff Hubbard
Type Unassigned
Useful Life
Category 0014030 GEN'L-PARKS
Priority Not Applicable
Status Active
Total Project Cost: **$70,000**

Project # **27PR001**
Project Name **Vehicle/Mower Replacement**

Division PARKS
Object
Location City Hall

Description

Replace outdated truck, mower, trailer, or vehicle

Justification

Vehicles or equipment is old and past its useful life span, needs to be replaced

Expenditures	FY '23	FY '24	FY '25	FY '26	FY '27	Total
Equip/Vehicles/Furnishings					70,000	70,000
Total					**70,000**	**70,000**

Funding Sources	FY '23	FY '24	FY '25	FY '26	FY '27	Total
030 - CIP FUND					50,000	50,000
110 - ROAD USE TAX $					20,000	20,000
Total					**70,000**	**70,000**

Budget Impact/Other

$50,000 CIP

City Capital Plan Equipment Replacment

FY '23 *thru* FY '27

City of Marshalltown, Iowa

Department PARK & RECREATION
Contact Geoff Hubbard

Project # 27PR002
Project Name Assistance League Improvements

Type Improvement
Useful Life 20 years
Category 0014030 GEN'L-PARKS

Division PARKS
Object 5340.010 CONTRACT-OUTSID
Priority Important
Location
Status Active
Total Project Cost: $150,000

Description

Improvements to Assistance League Park per the Parks & Recreation Master Plan

Justification

The park has old outdate equipment, no accessible sidewalks to amenities and needs updated sign and lighting for security

Expenditures	FY '23	FY '24	FY '25	FY '26	FY '27	Total
Equip/Vehicles/Furnishings					150,000	150,000
Total					**150,000**	**150,000**

Funding Sources	FY '23	FY '24	FY '25	FY '26	FY '27	Total
030 - CIP FUND					150,000	150,000
Total					**150,000**	**150,000**

Budget Impact/Other

Budget Items	FY '23	FY '24	FY '25	FY '26	FY '27	Total
5342.000: CONTRACT-OUTSIDE HELP					150,000	150,000
Total					**150,000**	**150,000**

City Capital Plan Equipment Replacment

FY '23 *thru* FY '27

City of Marshalltown, Iowa

Department PARK & RECREATION
Contact

Project # B2653
Project Name MSA LITCHFIELD SHELTER

Type Improvement
Useful Life 30 years
Category 1424030 SOFTBALL ASSOC

Division
Object 5776.000 BUILDINGS & IMPR
Priority Less Important
Location SC
Status Active
Total Project Cost: **$15,000**

Description

West side of complex COST: $10000 PURCHASE DATE: 4/30/1996 MFG YEAR: 1996 PURCHASE PRICE: $5852

Justification

Expenditures	FY '23	FY '24	FY '25	FY '26	FY '27	Total
Construction				15,000		15,000
Total				**15,000**		**15,000**

Funding Sources	FY '23	FY '24	FY '25	FY '26	FY '27	Total
142 - M. SOFTBALL ASSOC				15,000		15,000
Total				**15,000**		**15,000**

Budget Impact/Other

Budget Items	FY '23	FY '24	FY '25	FY '26	FY '27	Total
5776.000: BUILDINGS & IMPROVEMENTS=>5,000				15,000		15,000
Total				**15,000**		**15,000**

City Capital Plan Equipment Replacment

FY '23 *thru* FY '27

City of Marshalltown, Iowa

Department PARK & RECREATION
Contact Jessica Kinser

Project # **FrmrMrkt**
Project Name **Farmer's Market Improvements**

Type Improvement
Useful Life 20 years
Category 0012020 GEN'L - PARKING
Priority Less Important
Status Active
Total Project Cost: **$50,000**

Division PARKS
Object
Location

Description

This project is to take on minimal improvements to the piece of land acquired at State Street and 2nd Avenue to be part of the Farmer's Market. The land will be used as lay down space for the State Street project and will likely not be released until 2024.

Improvements include fresh sod, a connecting sidewalk and benches.

Justification

The property has not had any recent funding dedicated to it, and as a City property deserves some minimal enhancements to match the upgraded aesthetic qualities of the corridor.

Expenditures	FY '23	FY '24	FY '25	FY '26	FY '27	Total
Construction		50,000				50,000
Total		**50,000**				**50,000**

Funding Sources	FY '23	FY '24	FY '25	FY '26	FY '27	Total
363- 2021 GO BOND		50,000				50,000
Total		**50,000**				**50,000**

Budget Impact/Other

The proposed funding source is General Obligation bonds.

City Capital Plan Equipment Replacment

FY '23 *thru* FY '27

City of Marshalltown, Iowa

Department PARK & RECREATION
Contact

Project # L2973
Project Name Goldfinch fishing dock

Type Maintenance
Useful Life 15 years
Category 0304030 CIP-Parks
Priority Critical
Status Active
Total Project Cost: $33,000

Division
Location GWP
Object 5749.000 OTHER CAPITAL EQ

Description

small fishing dock replacement. First purchased 2001 @ $8297 each

Justification

Expenditures	FY '23	FY '24	FY '25	FY '26	FY '27	Total
Equip/Vehicles/Furnishings	33,000					33,000
Total	**33,000**					**33,000**

Funding Sources	FY '23	FY '24	FY '25	FY '26	FY '27	Total
030 - CIP FUND	33,000					33,000
Total	**33,000**					**33,000**

Budget Impact/Other

Budget Items	FY '23	FY '24	FY '25	FY '26	FY '27	Total
5750.000: OTHER CAPITAL EQUIPMENT=>5,000	10,000					10,000
Total	**10,000**					**10,000**

City Capital Plan Equipment Replacment

FY '23 *thru* FY '27

City of Marshalltown, Iowa

Department PARK & RECREATION
Contact

Project # **PRK101**
Project Name **Park 101 (101 West Main Street)**

Type Unassigned
Useful Life
Category 0014030 GEN'L-PARKS
Priority Not Applicable
Status Active
Total Project Cost: **$100,000**

Division
Location
Object

Description

The City owns and is demolishing the building at 101 West Main Street. The lot is not likely to be redeveloped with a new building as it is only 3,600 square feet (40x90). Rather than leaving a vacant lot at such a prominent corner of downtown, the proposal is to create a pocket park, Park 101. An initial project would address accessibility and lighting, but likely not involve any unique elements.

Justification

The corner of 1st Street and Main Street is an important area of downtown and the historic distict and should be something more useful than a grass lot.

Expenditures	FY '23	FY '24	FY '25	FY '26	FY '27	Total
Construction	100,000					100,000
Total	**100,000**					**100,000**

Funding Sources	FY '23	FY '24	FY '25	FY '26	FY '27	Total
363- 2021 GO BOND	100,000					100,000
Total	**100,000**					**100,000**

Budget Impact/Other

The proposal is to use General Obligation bonds for the project, looking at grant possibilities for enhancements beyond sidewalks, benches, plantings, and lighting.

City Capital Plan Equipment Replacment

FY '23 *thru* FY '27

City of Marshalltown, Iowa

Department PARK & RECREATION
Contact

Project # Sign 21.22
Project Name Riverview Park Entry Sign

Type Unassigned
Useful Life
Category 0011010 GEN'L-POLICE ADM
Priority Not Applicable
Status Active
Total Project Cost: $25,472

Division
Location
Object

Description

Justification

Expenditures	FY '23	FY '24	FY '25	FY '26	FY '27	Total
Equip/Vehicles/Furnishings	12,736					12,736
Total	**12,736**					**12,736**

Funding Sources	FY '23	FY '24	FY '25	FY '26	FY '27	Total
030 - CIP FUND	12,736					12,736
Total	**12,736**					**12,736**

Budget Impact/Other

City Capital Plan Equipment Replacment

FY '23 *thru* FY '27

City of Marshalltown, Iowa

Department PARK & RECREATION
Contact

Project # TR709
Project Name Vehicle/Mower Replacement

Type Equipment
Useful Life 15 years
Category 0304030 CIP-Parks
Priority Critical
Status Active
Total Project Cost: **$50,000**

Division
Location SHOP
Object 5749.000 OTHER CAPITAL EQ

Description

PURCHASED NEW, CURRENT HOURS 50, EXCELLENT CONDITION, TRACTOR USED IN PARK WORK AND FLOOD CONTROL AREAS. COST: $50000 PURCHASE DATE: 7/26/1999 MFG YEAR: 1999 PURCHASE PRICE: $33500 Current hours 1535 used 378 this year.

Justification

Expenditures	FY '23	FY '24	FY '25	FY '26	FY '27	Total
Equip/Vehicles/Furnishings		50,000				50,000
Total		**50,000**				**50,000**

Funding Sources	FY '23	FY '24	FY '25	FY '26	FY '27	Total
030 - CIP FUND		50,000				50,000
Total		**50,000**				**50,000**

Budget Impact/Other

City Capital Plan Equipment Replacment

FY '23 *thru* FY '27

City of Marshalltown, Iowa

Department PARK & RECREATION
Contact
Type Unassigned
Useful Life
Category 0014030 GEN'L-PARKS
Priority Not Applicable
Status Active
Total Project Cost: **$250,000**

Project # **TRL1**
Project Name **Trail Connection- Freedom Rock to Skate Park**

Division
Location
Object

Description

This project seeks to construct new trail segements to connect the Freedom Rock to the Crosby Park trail and from Wayward Social to the Skate Park. This does not include the bridge across Linn Creek and is for paving only.

Justification

The easiest way to provide businesses near a trail which residents and visitors would utilize is to make a new connection versus expecting a new business to open in other locations along the River's Edge or Linn Creek Trails. This will also make a connection with a planned Marshalltown Trailhead for the River's Edge Trail.

Expenditures	FY '23	FY '24	FY '25	FY '26	FY '27	Total
Construction	250,000					250,000
Total	**250,000**					**250,000**

Funding Sources	FY '23	FY '24	FY '25	FY '26	FY '27	Total
364- 2022 GO BOND	250,000					250,000
Total	**250,000**					**250,000**

Budget Impact/Other

$250,000 was borrowed as part of the 2022 GO Bond. Engineering costs are being paid for out of LOST.

City Capital Plan Equipment Replacment

FY '23 *thru* FY '27

City of Marshalltown, Iowa

Department PARK & RECREATION
Contact
Type Unassigned
Useful Life
Category 0014030 GEN'L-PARKS
Priority Not Applicable
Status Active
Total Project Cost: **$1,108,350**

Project # **TRL2**
Project Name **Linn Creek Trail Bridge**

Division
Location
Object

Description

Justification

Expenditures	FY '23	FY '24	FY '25	FY '26	FY '27	Total
Planning & Design Engineering	119,000					119,000
Construction		989,350				989,350
Total	**119,000**	**989,350**				**1,108,350**

Funding Sources	FY '23	FY '24	FY '25	FY '26	FY '27	Total
364- 2022 GO BOND	700,000					700,000
Total	**700,000**					**700,000**

Budget Impact/Other

City Capital Plan Equipment Replacment

FY '23 *thru* FY '27

City of Marshalltown, Iowa

Department PARK & RECREATION
Contact

Project # TRL2023
Project Name River's Edge Trailhead

Type Unassigned
Useful Life
Category 0014030 GEN'L-PARKS
Priority Not Applicable
Status Active
Total Project Cost: $1,265,000

Division
Location
Object

Description

This project is to construct a trail head for the Iowa River's Edge Trail at the MSA Softball Complex and Skate Park. This project was identified as a key placemaking project in the Placemaking Plan for the River's Edge Trail and will serve residents and visitors using the Linn Creek Trail system, MSA, and Skatepark as well.

Justification

This project provides a new amenity to Marshalltown's park system which serves a number of different park and trail users. There is not currently a restroom available at the Skate Park, so this will make that space more user friendly while providing a resting point along the Linn Creek Trail and the ultimate starting/stopping destination for the River's Edge Trail.

Expenditures	FY '23	FY '24	FY '25	FY '26	FY '27	Total
Planning & Design Engineering	165,000					165,000
Construction		1,100,000				1,100,000
Total	**165,000**	**1,100,000**				**1,265,000**

Funding Sources	FY '23	FY '24	FY '25	FY '26	FY '27	Total
364- 2022 GO BOND	760,000					760,000
Total	**760,000**					**760,000**

Budget Impact/Other

This project does have strong potential for outside funding. Trails Inc. has $200,000 to dedicate to a trail head, The remainder ($775,000) would be proposed to be a general obligation bond and other grants that could be available.

City Capital Plan Equipment Replacment

FY '23 *thru* FY '27

City of Marshalltown, Iowa

Department POLICE
Contact

Project # BODY CAMERA
Project Name BODY CAMERAS

Type Equipment
Useful Life 3 years
Category 0301010 CIP- POLICE

Division
Location
Object 5718.000 MINOR EQUIPMENT
Priority Critical
Status Active
Total Project Cost: **$170,000**

Description

FY 16-17 - Cameras $15,000
Purchased: 15 cameras, docking station

FY 17-18 - Cameras $15,000
Purchased: 2 docking stations, ProServ-Standard Setup

FY 18-19 - moved to IT.

FY 19-20 - Body camera equipment $15,000
Budget applied towards purchase of 10 WatchGuard Vista XLT DVR, charging bases

FY 20-21 - Body camera equipment $15,000
Purchased: 10 VIS-XLT-WIF-DRV

FY 21-22 - Body camera equipment $15,000

FY 21-22 - Body camera equipment $15,000

FY 23-24 - Body camera equipment $15,000

FY 24-25 - Body camera equipment $15,000

FY 25-26 - Body camera equipment $15,000

FY 26-27 - Body camera equipment: $15,000

Justification

This is a city council implement equipment program. Funds will be used to maintain body cameras and data storage capabilities.

Expenditures	FY '23	FY '24	FY '25	FY '26	FY '27	Total
Equip/Vehicles/Furnishings	15,000	15,000	15,000	15,000	15,000	75,000
Total	**15,000**	**15,000**	**15,000**	**15,000**	**15,000**	**75,000**

Funding Sources	FY '23	FY '24	FY '25	FY '26	FY '27	Total
030 - CIP FUND	15,000	15,000	15,000	15,000	15,000	75,000
Total	**15,000**	**15,000**	**15,000**	**15,000**	**15,000**	**75,000**

Budget Impact/Other

City Capital Plan Equipment Replacment

FY '23 *thru* FY '27

Department POLICE

City of Marshalltown, Iowa

Contact

Budget Items	FY '23	FY '24	FY '25	FY '26	FY '27	Total
5718.000: MINOR EQUIPMENT <5,000	15,000	15,000	15,000	15,000	15,000	75,000
Total	**15,000**	**15,000**	**15,000**	**15,000**	**15,000**	**75,000**

City Capital Plan Equipment Replacment

FY '23 *thru* FY '27

City of Marshalltown, Iowa

Department POLICE
Contact

Project # COPIERS
Project Name COPIER REPLACEMENT

Type Equipment
Useful Life 5 years
Category 0301010 CIP- POLICE
Priority Very Important
Status Active
Total Project Cost: **$34,000**

Division
Location
Object

Description

ORIGINAL PURCHASES: (Budgeted $8500 per machine)
Records - Lanier IMC300, #3109R900130, $4588.50
Patrol - Lanier IMC300, #3109R200096, $4588.50
Detectives - Lanier IMC300, #3109R100395, $4588.50
Administration - Lanier IMC300, #3109R100318, $4588.50
Booking - Lanier MPC4503-LD, $6945.00

NEW PURCHASE: $34,000 replacement budget for 5 units.

Justification

The recommended replacement schedule on this equipment is every 5 years.

Expenditures	FY '23	FY '24	FY '25	FY '26	FY '27	Total
Equip/Vehicles/Furnishings			34,000			34,000
Total			**34,000**			**34,000**

Funding Sources	FY '23	FY '24	FY '25	FY '26	FY '27	Total
030 - CIP FUND			34,000			34,000
Total			**34,000**			**34,000**

Budget Impact/Other

Budget Items	FY '23	FY '24	FY '25	FY '26	FY '27	Total
5750.000: OTHER CAPITAL EQUIPMENT=>5,000			34,000			34,000
Total			**34,000**			**34,000**

City Capital Plan Equipment Replacment

FY '23 *thru* FY '27

City of Marshalltown, Iowa

Department POLICE
Contact

Project # GTSB
Project Name GTSB GRANT

Type Equipment
Useful Life 5 years
Category 1521010 POLICE UNDESIGN

Division PATROL
Object 5718.000 MINOR EQUIPMENT
Priority Important
Location
Status Active
Total Project Cost: **$97,400**

Description

FY 14-15 - Requested $8850 (1 lidar $3000, 3 PBT $1350, Speed Trailer $4500)
Received $3900 for lidar & 2 PBTs
PURCHASED: Truspeed Lidar, serial: TJ003107, $2315; 2 PBTs, $898

FY 15-16 - Requested $16500 (2 moving radars $3000, 3 in-car video cameras $13500)
PURCHASED: 2 in-car 4RE DVR Cam Systems, $9,000; 2 radar units, $3,000
TOTAL $12,000

FY 16-17 - $16500 for grant expenditures
Received $8,000 for overtime expenses, no equipment funding

FY 17-18 - $8,000 for grant expenditures
Awarded: $4,500 per in-car camera (2), $1,500 per radar (1) = $10,500

FY 18-19 - $8000 for equipment expenditures
Awarded: $6,000 for 1 radar and 1 in-car camera

FY 19-20 - $8000 for equipment expenditures
Received $8,000 for overtime expenses, no equipment funding.

FY 20-21 - $4,500 for one in-car camera

FY 21-22 - $8000 for equipment expenditures

FY 22-23 - $8000 for equipment expenditures

FY 23-24 - $8000 for equipment expenditures

FY 24-25 - $8000 for equipment expenditures

FY 25-26 - $8000 for equipment expenditures

Justification

GTSB is our traffic safety partnership with the State of Iowa. We apply for annual grants to purchase traffic enforcement equipment, traffic safety training materials, and overtime dollars to fund traffic enforcement projects.

Expenditures	FY '23	FY '24	FY '25	FY '26	FY '27	Total
Equip/Vehicles/Furnishings	8,000	8,000	8,000	8,000	8,000	40,000
Total	**8,000**	**8,000**	**8,000**	**8,000**	**8,000**	**40,000**

Funding Sources	FY '23	FY '24	FY '25	FY '26	FY '27	Total
152 - OTHER POLICE GRANTS	8,000	8,000	8,000	8,000	8,000	40,000
Total	**8,000**	**8,000**	**8,000**	**8,000**	**8,000**	**40,000**

Department POLICE

Contact

Budget Impact/Other

Budget Items	FY '23	FY '24	FY '25	FY '26	FY '27	Total
5718.000: MINOR EQUIPMENT <5,000	8,000	8,000	8,000	8,000	8,000	40,000
Total	**8,000**	**8,000**	**8,000**	**8,000**	**8,000**	**40,000**

City Capital Plan Equipment Replacment

FY '23 *thru* FY '27

City of Marshalltown, Iowa

Department POLICE
Contact

Project # JAG
Project Name JAG GRANT

Type Equipment
Useful Life 5 years
Category 1511010 LLE BLOCK GRANT

Division
Location

Object 5718.000 MINOR EQUIPMENT

Priority Important
Status Active
Total Project Cost: **$140,144**

Description

FY 15 GRANT AWARD: $18,855 - 50/50 split City/County - PD PORTION: $9427.50
PURCHASED: 5 Glock Training Pistols $2310; 2 TASERS, 2 power mags $2124.80;
TASER sim suit $570; Tactical headset $750; Camcorder $899.99

FY 15-16 - GRANT AWARD: $19,304 - split city/county
PD $9,652 - Body camera project: hard drives, server components, 6 cameras & software

FY 16-17 - GRANT AWARD: $20,625 - split city/county
PD $10,312.50 - Body camera project: charging dock, 9 cameras

FY 17-18 - Grant expenditures $9000
AWARDED: $21,822 - split city/county
PD purchased alternate light source $9,526.41, TASERS $1,384.59

FY 18-19 - Grant expenditures $9000
AWARDED: $20,765 - split city/county
PD purchased Throwbot 2 Base Kit, SearchStick Pole $10,382.50 (plus seized assets $5,112.50)

FY 19-20 - Grant expenditures $9000
AWARDED: $18,918 - split city/county
PD $9,459 for target system at range

FY 20-21 - Grant expenditures $10,000

FY 21-22 - Grant expenditures $10,000

FY 22-23 - Grant expenditures $10,000

FY 23-24 - Grant expenditures $10,000

FY 24-25 - Grant expenditures $10,000

FY 25-26 - Grant expenditures $10,000

Justification

The Byrne JAG grant is awarded annually to agencies to assist with law enforcement equipment and training purchases. These dollars cannot be used to surplant normal operational expenses or equipment purchases. These dollars can only be used to enhance law enforcement initiatives. The amount of the grant varies year to year and is dependant upon your UCR crime statistics. Historically the City of Marshalltown splits the award 50/50 with Marshall County.

Expenditures	FY '23	FY '24	FY '25	FY '26	FY '27	Total
Equip/Vehicles/Furnishings	10,000	10,000	10,000	10,000	10,000	50,000
Total	**10,000**	**10,000**	**10,000**	**10,000**	**10,000**	**50,000**

Funding Sources	FY '23	FY '24	FY '25	FY '26	FY '27	Total
151 - POLICE GRANTS	10,000	10,000	10,000	10,000	10,000	50,000
Total	**10,000**	**10,000**	**10,000**	**10,000**	**10,000**	**50,000**

City Capital Plan Equipment Replacment

FY '23 *thru* FY '27

Department POLICE

Contact

City of Marshalltown, Iowa

Budget Impact/Other

Budget Items	FY '23	FY '24	FY '25	FY '26	FY '27	Total
5718.000: MINOR EQUIPMENT <5,000	10,000	10,000	10,000	10,000	10,000	50,000
Total	**10,000**	**10,000**	**10,000**	**10,000**	**10,000**	**50,000**

City Capital Plan Equipment Replacment

FY '23 *thru* FY '27

City of Marshalltown, Iowa

Department POLICE
Contact
Type Unassigned
Useful Life
Category 1771010 SEIZED ASSETS-PO
Priority Important
Status Active
Total Project Cost: **$125,052**

Project # **SEIZD ASSET**
Project Name **MISC SEIZED ASSET ALLOCATION**

Division
Location policedept
Object 5718.000 MINOR EQUIPMENT

Description

Miscellaneous Seized Asset Allocation

FY 18-19 - Throwbot $5112.50 ($10,382.50 paid by JAG grant)

FY 19-20 - Radio transmission equipment from MHS to PD, $5,000
*Purchased 7 shotguns $3,457.97

FY22 - Training, supplies, software

Justification

The amount of seized assets that we bring in on an annual basis is unpredictable and dependent on several factors outside of our control. Any figures listed in this CIP budget are very rough estimates.

Expenditures	FY '23	FY '24	FY '25	FY '26	FY '27	Total
Equip/Vehicles/Furnishings	4,000	4,000	4,000	4,000	4,000	20,000
Total	**4,000**	**4,000**	**4,000**	**4,000**	**4,000**	**20,000**

Funding Sources	FY '23	FY '24	FY '25	FY '26	FY '27	Total
177 - SEIZED ASSETS	4,000	4,000	4,000	4,000	4,000	20,000
Total	**4,000**	**4,000**	**4,000**	**4,000**	**4,000**	**20,000**

Budget Impact/Other

Budget Items	FY '23	FY '24	FY '25	FY '26	FY '27	Total
5718.000: MINOR EQUIPMENT <5,000	4,000	3,000	3,000	3,000	3,000	16,000
Total	**4,000**	**3,000**	**3,000**	**3,000**	**3,000**	**16,000**

City Capital Plan Equipment Replacment

FY '23 *thru* FY '27

City of Marshalltown, Iowa

Department POLICE
Contact

Project # TACT EQUIP
Project Name TACTICAL EQUIPMENT

Type Equipment
Useful Life 5 years
Category 0301010 CIP- POLICE
Priority Very Important
Status Active
Total Project Cost: **$34,640**

Division
Location Policedept
Object 5718.000 MINOR EQUIPMENT

Description

FY 17-18 NEW PURCHASE: Tactical Equipment, COST: $5,000, SPENT: $5,000

FY 19-20, COST $5,000, SPENT: $4640.42

FY 21-22, COST $5,000

FY 23-24, COST $5,000

FY 25-26, COST $5,000

Justification

This project is for the maintainance and replacement of tactical and special operations safety equipment.

Expenditures	FY '23	FY '24	FY '25	FY '26	FY '27	Total
Equip/Vehicles/Furnishings		5,000		5,000		10,000
Total		**5,000**		**5,000**		**10,000**

Funding Sources	FY '23	FY '24	FY '25	FY '26	FY '27	Total
030 - CIP FUND		5,000		5,000		10,000
Total		**5,000**		**5,000**		**10,000**

Budget Impact/Other

Budget Items	FY '23	FY '24	FY '25	FY '26	FY '27	Total
5718.000: MINOR EQUIPMENT <5,000		5,000		5,000		10,000
Total		**5,000**		**5,000**		**10,000**

City Capital Plan Equipment Replacment

FY '23 *thru* FY '27

City of Marshalltown, Iowa

Department POLICE
Contact

Project # TASERS
Project Name TASERS

Type Equipment
Useful Life 3 years
Category 0301010 CIP- POLICE

Division
Location
Object 5718.000 MINOR EQUIPMENT
Priority Critical
Status Active
Total Project Cost: **$76,675**

Description

FY 16-17 - 5 TASERS $6,000 total (Budget revised to $5000)
Purchased: 4 TASERS, holsters, battery packs $5,000 (total was $6030.79)

FY 17-18 - TASERS, COST: $6,000
Purchased: 5 Class III X2, tactical battery pack, 5 holsters

FY 18-19 - TASERS, COST: $6,000
Purchased: 4 X2 Tasers, battery packs, cartridges, holsters (total: $8577 CIP & JAG)

FY 19-20 - TASERS, COST: $6,000
Purchased: 5 - TASER X2 CEW, $5737.50

FY 20-21 - TASERS, COST: $6,000
Purchased: 2 tasers, 6 battery packs, 90 cartridges, 1 target: $5993.15

FY 21-22 - TASERS, COST: $6,000
Purchased: 4 tasers, 5 batteries, 2 catridges, 1 target: $5944.02

FY 22-23 - TASERS, COST: $6,000

FY 23-24 - TASERS, COST: $6,000

FY 24-25 - TASERS, COST: $6,000

FY 25-26 - TASERS, COST: $6,000

FY 26-27 - TASERS, COST: $8,000

Justification

Electronic control devices are critically important officer safety tools. This project allows us to maintain and replace vital safety equipment.

Expenditures	FY '23	FY '24	FY '25	FY '26	FY '27	Total
Equip/Vehicles/Furnishings	6,000	6,000	6,000	6,000	8,000	32,000
Total	**6,000**	**6,000**	**6,000**	**6,000**	**8,000**	**32,000**

Funding Sources	FY '23	FY '24	FY '25	FY '26	FY '27	Total
030 - CIP FUND	6,000	6,000	6,000	6,000	8,000	32,000
Total	**6,000**	**6,000**	**6,000**	**6,000**	**8,000**	**32,000**

City Capital Plan Equipment Replacment

FY '23 *thru* FY '27

Department POLICE

Contact

City of Marshalltown, Iowa

Budget Impact/Other

Budget Items	FY '23	FY '24	FY '25	FY '26	FY '27	Total
5718.000: MINOR EQUIPMENT <5,000	6,000	6,000	6,000	6,000	8,000	32,000
Total	**6,000**	**6,000**	**6,000**	**6,000**	**8,000**	**32,000**

City Capital Plan Equipment Replacment

FY '23 *thru* FY '27

City of Marshalltown, Iowa

Department POLICE
Contact
Type Unassigned
Useful Life
Category 0301010 CIP- POLICE
Priority Very Important
Status Active
Total Project Cost: **$25,318**

Project # **TRN EQUIP**
Project Name **TRAINING EQUIPMENT**

Division
Location
Object 5718.000 MINOR EQUIPMENT

Description

FY 17-18 NEW PURCHASE: Training Equipment, COST: $5,000

FY 19-20: $5,000
Purchase: Range equipment upgrade $2325.80

FY 21-22: $5,000
Purchased 74 Smart Catridges: $2992.56

FY 23-24 $5,000

FY 25-26 $5,000

Justification

This project is to maintain training equipment for department use.

Expenditures	FY '23	FY '24	FY '25	FY '26	FY '27	Total
Equip/Vehicles/Furnishings		5,000		5,000		10,000
Total		**5,000**		**5,000**		**10,000**

Funding Sources	FY '23	FY '24	FY '25	FY '26	FY '27	Total
030 - CIP FUND		5,000		5,000		10,000
Total		**5,000**		**5,000**		**10,000**

Budget Impact/Other

Budget Items	FY '23	FY '24	FY '25	FY '26	FY '27	Total
5718.000: MINOR EQUIPMENT <5,000		5,000		5,000		10,000
Total		**5,000**		**5,000**		**10,000**

City Capital Plan Equipment Replacment

FY '23 *thru* FY '27

City of Marshalltown, Iowa

Department POLICE
Contact Chief Tupper

Project # VEH IT
Project Name VEHICLE IT EQUIPMENT - MPD

Type Equipment
Useful Life
Category 0301010 CIP- POLICE

Division PATROL
Object 5718.000 MINOR EQUIPMENT
Priority Very Important
Location policedept
Status Active
Total Project Cost: **$43,903**

Description

NEW: VEHICLE IT EQUIPMENT, $5,000
FY 21-22 - $5,000
FY 23-24 - $5,000
FY 25-26 - $5,000

Justification

Maintain critically important vehicle IT equipment used for law enforcement reporting functions.

Expenditures	FY '23	FY '24	FY '25	FY '26	FY '27	Total
Equip/Vehicles/Furnishings		5,000		5,000		10,000
Total		**5,000**		**5,000**		**10,000**

Funding Sources	FY '23	FY '24	FY '25	FY '26	FY '27	Total
030 - CIP FUND		5,000		5,000		10,000
Total		**5,000**		**5,000**		**10,000**

Budget Impact/Other

Spend $5,000 every other year to update cameras, printers and scanners.

City Capital Plan Equipment Replacment

FY '23 *thru* FY '27

City of Marshalltown, Iowa

Department POLICE
Contact

Project # VEH RPLCMT
Project Name VEHICLE REPLACEMENT

Type Equipment
Useful Life 4 years
Category 0301010 CIP- POLICE
Priority Critical
Status Active
Total Project Cost: **$1,941,489**

Division PATROL
Object 5749.000 OTHER CAPITAL EQ
Location policedept

Description

FY 13-14 - Replace 3 marked police vehicles, TOTAL: $90,000 *Total: $87,630.27
FY 14-15 - Replace 3 marked police vehicles, TOTAL: $111,000 *Total: $102,679.03
FY 15-16 - Replace 3 marked police vehicles, TOTAL: $120,000 *Total: $95,629.77
FY 16-17 - Replace 3 marked police vehicles, TOTAL: $110,000 *Replaced 2 vehicles + costs uncovered by insurance for replacement of totaled vehicle,Total: $62,598.17

FY 17-18 - Replace 3 marked police vehicles, TOTAL BUDGET: $120,000, TOTAL SPENT: $115,851.42
New squad: 2017 Ford Explorer, VIN: 1FM5K8AR9HGD57655 (Trade-in: 2009 Ford Crown Vic, VIN: 2FAHP71V39X126763, $2,000)
New squad: 2017 Ford Explorer, VIN: 1FM5K8AR7HGD57654 (Trade-in: 2014 Chevrolet Caprice, VIN: 6G3NS5U23EL950466, $9,500)
New squad: 2017 Ford Explorer, VIN: 1FM5K8AR0HGD57656 (Trade-in: 2014 Chevrolet Caprice, VIN: 6G3NS5U27EL978149, $9,500)

FY 18-19 - Replace 2 marked police vehicles
Purchase: 2019 Ford Explorer, VIN: 1FM5K8AR7KGA12163 $39,932.75
Purchase: 2019 Ford Explorer, VIN: 1FM5K8AR9KGA12164 $45,165.24
Purchase: 2010 Ford F150 (Detective vehicle) $20,962

FY 19-20 - Replace 3 marked police vehicles, $120,000. Trade-in to be determined. Estimated trade value $5,000 per vehicle.
Purchase: 2020 Ford Explorer, VIN: 1FM5K8AW3LGA97042, $48,336.34 (Car 510)
Purchase: 2020 Ford Explorer, VIN: 1FM5K8AW5LGA97043, $49,836.34 (Car 527)

FY 20-21 - Replace two patrol vehicles with 2 2021 new patrol vehicles, purchase one used 2019 detective vehicle $125,000.
26-JanJensen-$11,000.00Trade in 2016 Charger
26-JanJensen-$5,600.00Trade in 2017 Ford Explorer
26-JanJensen$33,888.00Purchase 2021 Ford Explorer (VIN:1FM5K8AB4MGA96402)
26-JanJensen$33,888.00Purchase 2021 Ford Explorer (VIN:1FM5K8AB2MGA96401)
26-Apr$230.00Floor Mats
26-Mar$645.71Trunk Caddies
9-FebBDH$6,969.02Set up MDTs
9-MarS & S Body Shop $200.00Parts
9-MarS & S Body Shop $500.00Car 504 lettering
9-MarS & S Body Shop $400.00Wrap doors in white
9-FebBDH$498.00Warranties
12-MayRacom$28,748.90Installation of equipment into both new vehicles
25-MayJensen $34,899.00Purchase 2019 Ford Edge (VIN: 2FMPK4AP5KBB04654)
25-MayJensen -$7,500.00Trade in 2011 Dodge Nitro
25-MayJense-$900.00Trade in 1992 G10
total $115,866.63

FY 21-22 - Replace 2 marked police vehicles, $110,000. Trade-in to be determined. Estimated trade value $5,000 per vehicle.

BDH$3,761.90Computer Setup
BDH$3,761.90Computer Setup
C Tech $754.40Flip Lid Box
C Tech $754.40Flip Lid Box
Hannam Automotive $1,100.00503 Wrap and Letters/Removal
Hannam Automotive $1,100.00531 Wrap and Letters/Removal
Jensen-$8,000.00Trade in 2012 Chevrolet Tahoe
Jensen$34,155.00Purchase 2021 Ford Explorer
Jensen-$17,500.00Trade in 2015 Chevrolet Tahoe
Jensen$34,155.00Purchase 2021 Ford Explorer
jensen-$8,500.00Trade in 2014 Dodge Caravan
Jensen $32,595.00Purchase 2018 Ford Edge

Keltek$14,916.47Car parts and installation/de-installation
Keltek$15,098.31Car parts and installation/de-installation
total $108,152.38

FY 22-23 - Replace 3 police vehicles, $130,000. Trade-in to be determined. Estimated trade value $5,000 per vehicle.

FY 23-24 - Replace 3 police vehicles, $150.000. Trade-in to be determined. Estimated trade value $5,000 per vehicle.

FY 24-25 - Replace 3 police vehicles, $193,000. Trade-in to be determined. Estimated trade value $5,000 per vehicle.

FY 25-26 - Replace 3 police vehicles, $150,000. Trade-in to be determined. Estimated trade value $5,000 per vehicle.

FY 26-27- Replace 3 police vehicles, $200,000. Trade-in to be determined. Estimated trade value $5,000 per vehicle.

FY 27-28- Replace 2 police vehicles, $160,000. Trade-in to be determined. Estimated trade value $5,000 per vehicle.

Justification

This project is for fleet maintenance replacement for marked squads. Each replacement will have a trade-in, estimated value of $5,000.

Expenditures	FY '23	FY '24	FY '25	FY '26	FY '27	Total
Equip/Vehicles/Furnishings	190,000	193,000	150,000	155,000	200,000	888,000
Total	**190,000**	**193,000**	**150,000**	**155,000**	**200,000**	**888,000**

Funding Sources	FY '23	FY '24	FY '25	FY '26	FY '27	Total
030 - CIP FUND	190,000	193,000	150,000	155,000	200,000	888,000
Total	**190,000**	**193,000**	**150,000**	**155,000**	**200,000**	**888,000**

Budget Impact/Other

City Capital Plan Equipment Replacment

FY '23 *thru* FY '27

City of Marshalltown, Iowa

Department POLICE
Contact

Project # VESTS
Project Name BODY ARMOR REPLACEMENT

Type Equipment
Useful Life 5 years
Category 0301010 CIP- POLICE

Division
Object 5718.000 MINOR EQUIPMENT
Priority Critical
Location policedept
Status Active
Total Project Cost: **$155,036**

Description

FY 14-15 - Replace 15 body armor, cost: $10,500 (Replaced 23 vests, $10,165)

FY 15-16 - Replace 8 body armor, cost: $5,600 (Replaced 10 vests, $5,600)

FY 16-17 - Replace 9 body armor, cost $6,300 (Replaced 7 duty vests, 2 tactical vests)

FY 17-18 - Replace body armor (8 duty, 2 tactical), TOTAL: $10,000 (Replaced 10 duty vests, 2 tacticals $7,787.14)

FY 18-19 - Replace body armor (6 duty, 2 tactical), TOTAL: $8,600
Purchased 4 duty vests, 3 tactical vests $7788.27

FY 19-20 - Replace body armor (21 duty), TOTAL: $14,700
Purchased 18 duty vests, 1 tactical vest $10,030.37

FY 20-21 - Replace body armor (13 duty, 2 tactical), TOTAL: $13,500
Purchases 11 vests, $5666.50

FY 21-22 - Replace body armor (12 duty, 3 tactical), TOTAL: $15,000

FY 22-23 - Replace body armor (10 duty, 2 tactical), TOTAL: $11,400

FY 23-24 - Replace body armor (8 duty, 2 tactical), TOTAL: $10,000

FY 24-25 - Replace body armor (16 duty, 2 tactical), TOTAL: $16,000

FY 25-26 - Replace body armor (15 duty, 2 tactical), TOTAL: $15650

FY 26-27- Replace body armor (15 duty, 2 tactical), TOTAL: $15650

Justification

This project is used to maintain required body armor for officer safety. Body armor has an expiration of 5 years from the date it is issued for wear.

Expenditures	FY '23	FY '24	FY '25	FY '26	FY '27	Total
Equip/Vehicles/Furnishings	11,400	10,000	16,000	15,650	15,650	68,700
Total	**11,400**	**10,000**	**16,000**	**15,650**	**15,650**	**68,700**

Funding Sources	FY '23	FY '24	FY '25	FY '26	FY '27	Total
030 - CIP FUND	11,400	10,000	16,000	15,560	15,650	68,610
Total	**11,400**	**10,000**	**16,000**	**15,560**	**15,650**	**68,610**

Department POLICE

Contact

Budget Impact/Other

Grant award to be determined.

City Capital Plan Equipment Replacment

FY '23 *thru* FY '27

City of Marshalltown, Iowa

Department PUBLIC WORKS - INFRAST
Contact

Project # 2019DOTHWY14
Project Name Median Improvements- Hwy 14 Olive to La Frentz

Type Improvement
Useful Life 20 years
Category 0012010 GEN'L-STREET MAI
Priority Very Important
Status Active
Total Project Cost: $1,383,500

Division
Location
Object

Description

The DOT resurfacing project will include a portion of a City project related to the replacement of the current medians with new medians that utilize both landscaping and hardscaping. The scope of the project is only Center Street from La Frentz to Olive Street.

Justification

The DOT is planning their resurfacing project in 2019, which is likely the only opportunity in the next 10-20 years for the City to consider making changes to the medians. The current medians are also in poor condition due to vehicle damage and general deterioration. These are features that many people see as they come and go through Marshalltown and do not contribute currently to a positive image of the City.

Expenditures	FY '23	FY '24	FY '25	FY '26	FY '27	Total
Construction	383,500	383,500	383,500			1,150,500
Total	**383,500**	**383,500**	**383,500**			**1,150,500**

Funding Sources	FY '23	FY '24	FY '25	FY '26	FY '27	Total
110 - ROAD USE TAX $	240,650	383,500	383,500			1,007,650
740/741 - STORM WATER	142,850					142,850
Total	**383,500**	**383,500**	**383,500**			**1,150,500**

Budget Impact/Other

Road Use Tax Fund is covering the planning and design costs. The DOT has proposed a 3 year repayment plan upon completion and closeout of the project. The estimated cost is project to be $1,125,000, with $142,850 attributable to storm sewer improvements.

Budget Items	FY '23	FY '24	FY '25	FY '26	FY '27	Total
5779.000: CAPITAL CONSTRCT-STREETS	383,500	383,500	383,500			1,150,500
Total	**383,500**	**383,500**	**383,500**			**1,150,500**

City Capital Plan Equipment Replacment

FY '23 *thru* FY '27

City of Marshalltown, Iowa

Department PUBLIC WORKS - INFRAST
Contact Jessica Kinser

Project # D&D001
Project Name Dilapidated Building Removal

Type Improvement
Useful Life
Category 0011075 GENL- NUISANCE
Priority Critical
Status Active
Total Project Cost: $2,999,161

Division
Location
Object

Description

The City's Dangerious and Dilapidated Building program was initiatlly funded by bond funds in 2017. Another round of bond funds in 2021 has helped keep the program alive, but there are some very large demolitions to occur in FY23. Looking ahead, we are planning 10 residential demolitions and one commercial demolition in FY24. FY25 and beyond are just residential demolitions.

Justification

The City has created a program to help stabilize neighborhoods through removal of abandoned and blighted strucutres. This project is a Council priority.

Expenditures	FY '23	FY '24	FY '25	FY '26	FY '27	Total
Construction	840,221	289,365	120,000	120,000	120,000	1,489,586
Total	**840,221**	**289,365**	**120,000**	**120,000**	**120,000**	**1,489,586**

Funding Sources	FY '23	FY '24	FY '25	FY '26	FY '27	Total
353 - CAPITAL PROJECTS				300,000		300,000
355 - D&D Program	840,221	289,365	120,000	120,000	120,000	1,489,586
Total	**840,221**	**289,365**	**120,000**	**420,000**	**120,000**	**1,789,586**

Budget Impact/Other

The Dangerous and Dilapidated Building Program was initially funding through $250,000 of General Obligation bonds. The Council has approved a one-time transfer of solid waste fees from the General Fund, which will provide a funding source for a period of time and continues to provide an annual transfer of around $20,000 to the D&D fund. GO bonds totaling $1,050,000 were borrowed in FY22, but large projects have created the need for more funds. An additional $600,000 was borrowed as part of the 2022 GO Bond.

City Capital Plan Equipment Replacment

FY '23 *thru* FY '27

City of Marshalltown, Iowa

Department PUBLIC WORKS - INFRAST
Contact Jessica Kinser

Project # DIPphase3
Project Name Phase 3- West Main Street

Type Improvement
Useful Life 40 years
Category 1102012 RUT-STREET CONS
Priority Less Important
Status Active
Total Project Cost: $5,770,000

Division PROJECTS
Object
Location

Description

Phase 3 of the Downtown Improvement Plan involves the reconstruction of West Main Street from 3rd Street to Center Street. Phase B also involves minor improvements along 3rd Street, pending pavement condition.

Justification

This is the third phase of the Downtown Improvement Plan and a vital area of downtown. These blocks are planned to see significant private investment in new retail and housing with additional redevelopment opportunities available.

Expenditures	FY '23	FY '24	FY '25	FY '26	FY '27	Total
Planning & Design Engineering			360,000	120,000		480,000
Construction				4,810,000		4,810,000
Construction Engineering				480,000		480,000
Total			**360,000**	**5,410,000**		**5,770,000**

Funding Sources	FY '23	FY '24	FY '25	FY '26	FY '27	Total
353 - CAPITAL PROJECTS			480,000	5,290,000		5,770,000
Total			**480,000**	**5,290,000**		**5,770,000**

Budget Impact/Other

The 2021 estimate for the project is $4,067,699. June 21 construction was estimated at $3,486,609.

Assume 18% inflation first year, followed by 4% annual - to CY26. Construction budget is $4,810,000.
Design engineering awarded @ 480,000
Construction engineering estimated @ 480,000

City Capital Plan Equipment Replacment

FY '23 *thru* FY '27

City of Marshalltown, Iowa

Department PUBLIC WORKS - INFRAST
Contact Jessica Kinser

Project # DIPphase4
Project Name Phase 4- Church Street

Type Improvement
Useful Life 40 years
Category 150710 CIP-STREETS
Priority Less Important
Status Active
Total Project Cost: $8,435,000

Division PROJECTS
Object
Location

Description

Improvements along Church Street are Phase 4 of the Downtown Improvement Plan. This includes enhancements and utility replacement from 3rd Street to 5th Avenue, with the main emphasis on the project of changing from a one-way street to a two-way street. This change would necessitate improvements with the traffic signal at 3rd Avenue, which are included in the total cost.

This project is the fourth phase of the Downtown Improvement Plan and designed to create a better, safer traffic pattern in downtown while still providing for pavement enhancements and utility replacement.

The 2021 estimate for the project is $5,717,653. June 21 construction was estimated at $4,899,653.

Assume 18% inflation first year, followed by 4% annual - to CY27. Construction budget is $7,035,000.
Design engineering estimated @ 700,000
Construction engineering estimated @ 700,000

Justification

Expenditures	FY '23	FY '24	FY '25	FY '26	FY '27	Total
Planning & Design Engineering				700,000		700,000
Construction					7,035,000	7,035,000
Construction Engineering					700,000	700,000
Total				**700,000**	**7,735,000**	**8,435,000**

Funding Sources	FY '23	FY '24	FY '25	FY '26	FY '27	Total
353 - CAPITAL PROJECTS				700,000	7,735,000	8,435,000
Total				**700,000**	**7,735,000**	**8,435,000**

Budget Impact/Other

City Capital Plan Equipment Replacment

FY '23 *thru* FY '27

City of Marshalltown, Iowa

Department PUBLIC WORKS - INFRAST
Contact Heather Thomas

Project # ECO21001
Project Name Unity Point Secondary Access

Type Improvement
Useful Life 40 years
Category 1102012 RUT-STREET CONS
Priority Less Important
Status Active
Total Project Cost: $55,200

Division PROJECTS
Object
Location

Description

Public/Private partnership to have public road south of Unity Point Hospital. Private share will be equal to cost of putting in driveway in this location with the difference in public street and private drive costs being the share the City will provide.

Approved Engineering w/ CGA in amount of $55,200.

Unverified Total Project Costs ~$750.000 based on CGA Concept from June 2021
Breakdown:
$340k UPH Costs (of which $91,550 is completed based on CGA estimates)
$410k City Costs :($55,200 Approved ESA & $354,800 Other Services & Const)

May 2022 Update - A Cost Estimate from CGA was received incomplete with mathmatical errors. City disagreed on split between UPH/City - sent comments back, no response received. City reached out to CGA 09/22 to get update - CGA said they would not update cost estimate until negotiations with church were further. Need new cost estimate.
Based on City correcting CGA math errors and assumption of Easement, LandAcq, & Admin Costs from a couple of years ago - we get:
1,215,000 Construction + 207,160 Easement, Land Acq, & Admin Cost = $1,067,160
Split
957,000 City / 258,000 UPH Construction
112,000 City / 95,160 UPH Easement, Land Acq, & Admin Cost
Total -> $1,069,000 City / $353,160 UPH

Per Jessica 12/2022 - keep expenses/funding the same as shown from January 2022 for Engineering until further discussion from council is had on land acquisition/construction. January 2022 discussion had $217,480 coming from Fund 360 Bond. That bond has been spent on other projects with $42,403.85 towards this project - CGA engineering expenses. Need remaining $12,796.15 of engineering agreement funded.

Justification

Expenditures	FY '23	FY '24	FY '25	FY '26	FY '27	Total
Planning & Design Engineering	6,710	7,000				13,710
Total	**6,710**	**7,000**				**13,710**

Funding Sources	FY '23	FY '24	FY '25	FY '26	FY '27	Total
360 - 2019 GO BONDS	914					914
363- 2021 GO BOND	5,796	7,000				12,796
Total	**6,710**	**7,000**				**13,710**

Budget Impact/Other

353,160 are estimated developer cost not currently shown.

City Capital Plan Equipment Replacment

FY '23 *thru* FY '27

City of Marshalltown, Iowa

Department PUBLIC WORKS - INFRAST
Contact Heather Thomas

Project # ECO21006
Project Name Creekside Estates Infrastructure

Type Improvement
Useful Life 20 years
Category 1102012 RUT-STREET CONS

Division PROJECTS
Object
Priority Very Important
Location
Status Active
Total Project Cost: $620,945

Description

The City entered into a public-private partnership with Prime Development for the construction of public infrastructure to help build a new housing subdivision along 6th Street. The City will pay for the total cost of the project and seek reimbursement from the developer for the private work to be done.

The City has a shortage of homes for owner-occupied use and has created partnerships to help spur the development as well as help keep costs lower for future buyers.

Construction Completed; The current split for public private is the following:
PUBLIC: $439,736
PRIVATE: $181,209

Justification

Expenditures	FY '23	FY '24	FY '25	FY '26	FY '27	Total
Construction	524,486					524,486
Total	**524,486**					**524,486**

Funding Sources	FY '23	FY '24	FY '25	FY '26	FY '27	Total
360 - 2019 GO BONDS	343,276					343,276
395 - ECON DEV PROJ FUND	181,209					181,209
Total	**524,485**					**524,485**

Budget Impact/Other

181,209 are developer reimbursement, shown as Fund 395

City Capital Plan Equipment Replacment

FY '23 *thru* FY '27

City of Marshalltown, Iowa

Department PUBLIC WORKS - INFRAST
Contact Heather Thomas

Project # ECO22001
Project Name South 7th Ave. Extension

Type Improvement
Useful Life 30 years
Category 1102012 RUT-STREET CONS

Division PROJECTS
Object
Priority Important
Location
Status Active
Total Project Cost: $832,700

Description

The City Council approved a development agreement with Ryan Heugerich for the extenion of South 7th Avenue to serve a new multi-family residential development. This extension also provides future access into undeveloped agricultural land, which is ideally situated for new residential development.

Justification

A public-private partnership accomplishes the City's objectives of not havign a dead-end or private drive and leaves room for future development while not leaving the developer with the entire cost of the infrastructure.

Expenditures	FY '23	FY '24	FY '25	FY '26	FY '27	Total
Construction	832,700					832,700
Total	**832,700**					**832,700**

Funding Sources	FY '23	FY '24	FY '25	FY '26	FY '27	Total
110 - ROAD USE TAX $	149,881					149,881
121 - LOCAL OPTION SALES TAX	279,104					279,104
395 - ECON DEV PROJ FUND	92,700					92,700
616 - SAN SWR REHAB	74,610					74,610
740/741 - STORM WATER	236,405					236,405
Total	**832,700**					**832,700**

Budget Impact/Other

Developer Reimbursement estimated at $92,700 at time of bid. - This is shown as Fund 395

City Capital Plan Equipment Replacment

FY '23 *thru* FY '27

City of Marshalltown, Iowa

Department PUBLIC WORKS - INFRAST
Contact Heather Thomas

Project # Fire_A
Project Name Fire Intersection Imprvmnt High/6th St

Type Improvement
Useful Life 30 years
Category 0011050 GEN'L-FIRE PROTE

Division FIRE
Object
Priority Critical
Location
Status Active
Total Project Cost: **$35,000**

Description

Fire Department desires larger radius in the SE quadrant of High St & 6th St - should have been installed when the fire pre-emption signal was.

Plan to go out to bid for construction early 2023 (FY23)

Justification

Expenditures	FY '23	FY '24	FY '25	FY '26	FY '27	Total
Construction	35,000					35,000
Total	**35,000**					**35,000**

Funding Sources	FY '23	FY '24	FY '25	FY '26	FY '27	Total
363- 2021 GO BOND	35,000					35,000
Total	**35,000**					**35,000**

Budget Impact/Other

City Capital Plan Equipment Replacment

FY '23 *thru* FY '27

City of Marshalltown, Iowa

Department PUBLIC WORKS - INFRAST
Contact Heather Thomas

Project # M3453
Project Name City-wide Bridge Inspection & Minor Repair

Type Maintenance
Useful Life 10 years
Category 1102012 RUT-STREET CONS
Priority Critical
Status Active
Total Project Cost: $315,000

Division PROJECTS
Object 5340.220 CONTRACT-BRIDGE
Location

Description

Allotment to immediately address issues with box culverts / bridges, engineering and federal bridge inspection requirements.

Justification

Expenditures	FY '23	FY '24	FY '25	FY '26	FY '27	Total
Maintenance	45,000	45,000	45,000	45,000	45,000	225,000
Total	**45,000**	**45,000**	**45,000**	**45,000**	**45,000**	**225,000**

Funding Sources	FY '23	FY '24	FY '25	FY '26	FY '27	Total
110 - ROAD USE TAX $	45,000	45,000	45,000	45,000	45,000	225,000
Total	**45,000**	**45,000**	**45,000**	**45,000**	**45,000**	**225,000**

Budget Impact/Other

City Capital Plan Equipment Replacment

FY '23 *thru* FY '27

City of Marshalltown, Iowa

Department PUBLIC WORKS - INFRAST
Contact Heather Thomas

Project # **PDFD_B**
Project Name **Police-Fire - Remaining SWAP Funds for drive/sdwlk**

Type Improvement
Useful Life 20 years
Category 0011010 GEN'L-POLICE ADM
Priority Less Important
Status Active
Total Project Cost: **$51,357**

Division PROJECTS
Object
Location

Description

The police & fire fund (Fund 354) was closed out and a resolution was passed to allow a SWAP of these funds so that up to the unspent Fund 354 amount could be spent from Fund 363.

The orginal resolution accounted for $526,357.40 in the police/fire building fund. SWAPs were made for some of State St's Engineering, LOST-Creekside expenses, & some of Center St Viaduct engineering.

Shown as of 12/30/22 are $440,000 towards possible generator and $35,000 for fire intersection improvements. This project is a place holder and shows the remaining $51,357.40. Projects that are being looked at include sidewalk around the art piece and road right-of-way to connect to MACC in addition to a driveway improvement if a storage building comes down.

Justification

Expenditures	FY '23	FY '24	FY '25	FY '26	FY '27	Total
Construction	51,357					51,357
Total	**51,357**					**51,357**

Funding Sources	FY '23	FY '24	FY '25	FY '26	FY '27	Total
363- 2021 GO BOND	51,357					51,357
Total	**51,357**					**51,357**

Budget Impact/Other

City Capital Plan Equipment Replacment

FY '23 *thru* FY '27

City of Marshalltown, Iowa

Department PUBLIC WORKS - INFRAST
Contact Heather Thomas

Project # PLT2023
Project Name City Hall Parking Lot

Type Improvement
Useful Life 30 years
Category 0012020 GEN'L - PARKING
Priority Less Important
Status Active
Total Project Cost: $1,452,500

Division PROJECTS
Object
Location

Description

January 2022 - it is unknown if this will involve Sponsored Project funds and be designed as a parking lot that captures and addresses stormwater run-off, or if this will just be a simple overlay type of project.

City awarded Sponsored Project Money for this project. This is eligible for received Sponsored Project Funds, but there are aspects of the project that are not eligible.

Justification

Expenditures	FY '23	FY '24	FY '25	FY '26	FY '27	Total
Planning & Design Engineering	20,000	50,000				70,000
Construction		829,500	553,000			1,382,500
Total	**20,000**	**879,500**	**553,000**			**1,452,500**

Funding Sources	FY '23	FY '24	FY '25	FY '26	FY '27	Total
364- 2022 GO BOND	20,000	370,000				390,000
615 - WPCP IMPROVMNTS		489,500	573,000			1,062,500
Total	**20,000**	**859,500**	**573,000**			**1,452,500**

Budget Impact/Other

$390,000 of GO Bonds are estimated for the local share if it is a Sponsored Project or if it is a City project to resurface.

City Capital Plan Equipment Replacment

FY '23 *thru* FY '27

City of Marshalltown, Iowa

Department PUBLIC WORKS - INFRAST
Contact

Project # PLT22001
Project Name City Centre Parking Lot Extension (LOST CD)

Type Unassigned
Useful Life
Category 0302020 CIP - PARKING
Priority Very Important
Status Active
Total Project Cost: $71,500

Division
Location
Object

Description

The City acquired 24 North 1st Avenue as a dangerous building for demolition. This building backs up to the City Centre Parking Lot. This project is to put a concrete surface over the area of the demolished building in order to provide a 1st Street entrance to the lot and create additional parking.

Justification

The City Centre Parking Lot is the highest used parking lot in Downtown, as it serves multiple Main Street and State Street businesses. Additional parking potentially allows for the City to create permit only spots which could create a new revenue stream.

Expenditures	FY '23	FY '24	FY '25	FY '26	FY '27	Total
Construction	71,500					71,500
Total	**71,500**					**71,500**

Funding Sources	FY '23	FY '24	FY '25	FY '26	FY '27	Total
121 - LOCAL OPTION SALES TAX	71,500					71,500
Total	**71,500**					**71,500**

Budget Impact/Other

The proposed design would be done internally, with an estimate of $71,500 for a concrete surface which is consistent with the rest of the parking lot.

City Capital Plan Equipment Replacment

FY '23 *thru* FY '27

City of Marshalltown, Iowa

Department PUBLIC WORKS - INFRAST
Contact Jessica Kinser

Project # RR 001
Project Name Railroad Quiet Zones

Type Improvement
Useful Life 20 years
Category 0012060 GEN'L-ENGINEERIN

Division PROJECTS
Object
Priority Important
Location
Status Active
Total Project Cost: **$1,430,646**

Description

The City studied of the railroad crossings at 2nd, 6th and 12th streets and 12th Avenue to determine if future improvements which enhance the safety of the crossings while following FRA rules for a quiet zone are possible. Making the improvements proposed by the report will not only enhance safety at our railroad crossings but will also give the ability to apply to Union Pacific for a quiet zone designation throughout the City. This would eliminate a majority of the train horn noise and help enhance quality of life. This project could also address the accessibility condition issues at each crossing.

Funding includes $600,000 (bumped to $778,089) of 2020A General Obligation bond proceeds (fund 362) and estimated $400,000 from Road Use Tax for the street related improvements.

Need new estimates.
Engineering 105,646
UP 40,000
11/21 Construction Estimate = 927,473
Assume 24 Construction, 18% inflation yr 1, 4% after = 1,183,723 construction round to 1,180,000
Place Hold Land Acquisition of $100,000

Total = $1,425,646

Funding = $782,843 Fund 362 Bond
$400,000 RUT
Unfunded = $242,803 - Per Jessica 12/2022, Pull from RUT.

Justification

Expenditures	FY '23	FY '24	FY '25	FY '26	FY '27	Total
Planning & Design Engineering	50,000					50,000
Land Acquisition	100,000					100,000
Construction		1,180,000				1,180,000
Construction Engineering		40,553				40,553
Total	**150,000**	**1,220,553**				**1,370,553**

Funding Sources	FY '23	FY '24	FY '25	FY '26	FY '27	Total
110 - ROAD USE TAX $		642,803				642,803
362 - 2020A GO Bond Projects	150,000	577,750				727,750
Total	**150,000**	**1,220,553**				**1,370,553**

Budget Impact/Other

City Capital Plan Equipment Replacment

FY '23 *thru* FY '27

City of Marshalltown, Iowa

Department PUBLIC WORKS - INFRAST
Contact Heather Thomas

Project # SAN_A
Project Name Sanitary Sewer Manhole Rehab Project

Type Maintenance
Useful Life 50 years
Category 529590 SANITARY SEWER C
Priority Very Important
Status Active
Total Project Cost: $2,400,000

Division SANITARY SEWER
Object
Location

Description

Full project scope not yet developed, it is estimated that over 4,000 VF of MH to be rehabilitated.

Preliminary Estimate on Project Cost $2.4 M.

City considering request for following schedule:
Engineering, Planning, Design in FY24
Construction from Fall 2024-Fall 2025 with 80/20 FY Split of Construction Costs

Justification

IDNR Consent Requirement, will need to request a compliance extension from Iowa DNR to delay to the timeframe shown. Preliminary conversations have been held with Anne H @ Iowa DNR.

Expenditures	FY '23	FY '24	FY '25	FY '26	FY '27	Total
Planning & Design Engineering		192,000				192,000
Construction			1,612,800	403,200		2,016,000
Legal / Admin Fees			38,400	9,600		48,000
Construction Engineering			115,200	28,800		144,000
Total		**192,000**	**1,766,400**	**441,600**		**2,400,000**

Funding Sources	FY '23	FY '24	FY '25	FY '26	FY '27	Total
616 - SAN SWR REHAB		192,000	1,766,400	441,600		2,400,000
Total		**192,000**	**1,766,400**	**441,600**		**2,400,000**

Budget Impact/Other

Assume some form of SRF Loan will be used.

City Capital Plan Equipment Replacment

FY '23 *thru* FY '27

City of Marshalltown, Iowa

Department PUBLIC WORKS - INFRAST
Contact Heather Thomas

Project # SAN21001
Project Name SAN21001 Sanitary Sewer CIPP Project

Type Maintenance
Useful Life 50 years
Category 529590 SANITARY SEWER C
Priority Very Important
Status Active

Division SANITARY SEWER
Object
Location

Total Project Cost: **$5,142,710**

Description

This is one phase of a consent order project through Iowa DNR.

In this phase, approximately 290 pipe segments will be rehabed through over 70,000 linear feet of cast in place pipe (CIPP) liner. Project includes point repairs, as needed, in these segments.

Planning and Design Engineering was completed by FoxStrand for $176,700.
Construction was awarded to Municipal Pipe Tool (MPT) in the amount of $4,768,210.10.
Construction Engineering is largely being handled by in-house sewer and engineering division staff, with a contract not to exceed $24,500 for FoxStrand assistance - if needed for unique encounters during construction.

Substantial Completion Date is September 22, 2023 with Final Completion by November 3, 2023.

Justification

DNR Consent Order Project

Expenditures	FY '23	FY '24	FY '25	FY '26	FY '27	Total
Planning & Design Engineering	1,205					1,205
Construction	4,500,000	500,000				5,000,000
Legal / Admin Fees	25,000	5,000				30,000
Construction Engineering	22,050	2,450				24,500
Total	**4,548,255**	**507,450**				**5,055,705**

Funding Sources	FY '23	FY '24	FY '25	FY '26	FY '27	Total
615 - WPCP IMPROVMNTS	4,548,255	507,450				5,055,705
Total	**4,548,255**	**507,450**				**5,055,705**

Budget Impact/Other

A portion of this will be paid with Revenue Bond as joint WPC/Headworks Project in total of $13,125,000 Million.

Remaining from cash on hand from sewer enterprise fund.

City Capital Plan Equipment Replacment

FY '23 *thru* FY '27

City of Marshalltown, Iowa

Department PUBLIC WORKS - INFRAST
Contact Heather Thomas

Project # SDW20001
Project Name 2020 ADA Sidewalk Repair

Type Maintenance
Useful Life 20 years
Category 462740 SA SIDEWALKS-REP

Division PROJECTS
Object
Priority Important
Location
Status Active
Total Project Cost: $148,879

Description

Many city-owned sidewalks throughout town have been identified as out of ADA compliance. This project is to bring many of the sidewalk approaches to City bridges, a stretch of city owned sidewalk through private residences, and intersection quadrants in the Kester subdivision into ADA compliance.

Justification

Expenditures	FY '23	FY '24	FY '25	FY '26	FY '27	Total
Construction	30,793					30,793
Total	**30,793**					**30,793**

Funding Sources	FY '23	FY '24	FY '25	FY '26	FY '27	Total
360 - 2019 GO BONDS	109,429					109,429
Total	**109,429**					**109,429**

Budget Impact/Other

City Capital Plan Equipment Replacment

FY '23 *thru* FY '27

City of Marshalltown, Iowa

Department PUBLIC WORKS - INFRAST
Contact Heather Thomas

Project # SDW20002
Project Name Sidewalk Gap Yr 2 - Fisher_Anson Elem

Type Improvement
Useful Life 20 years
Category 0304040 Recreation
Priority Less Important
Status Active
Total Project Cost: $560,970

Division PROJECTS
Object
Location

Description

In 2018, the City Council undertook a study of the areas in the community where sidewalk gaps exist with the purpose of identifying where the City should seek to install a sidewalk to enhance safety and accessibility. A lack of sidewalks can create safety issues for pedestrians or cyclists. The areas around elementary schools are prone to having children in the area. Sidewalks also provide connectivity throughout the community, enhancing the quality of life by improving walkability.

This project is for areas around Fisher Elementary and Anson Elementary.

Survey/Design Engineering & Easement Negotiations = $54,585.05
Easement Payments = $1,260.00
Construction = $505,124.95

Total = $560,970.00

Intend to use Fund 360 for Construction.

Justification

Expenditures	FY '23	FY '24	FY '25	FY '26	FY '27	Total
Construction	505,125					505,125
Total	**505,125**					**505,125**

Funding Sources	FY '23	FY '24	FY '25	FY '26	FY '27	Total
360 - 2019 GO BONDS	480,060					480,060
363- 2021 GO BOND	25,065					25,065
Total	**505,125**					**505,125**

Budget Impact/Other

City Capital Plan Equipment Replacment

FY '23 *thru* FY '27

City of Marshalltown, Iowa

Department PUBLIC WORKS - INFRAST
Contact Heather Thomas

Project # SDW23001
Project Name Sidewalk Gap Yr 3 - Hogland

Type Improvement
Useful Life 30 years
Category 0304040 Recreation
Priority Less Important
Status Active
Total Project Cost: $500,000

Division PROJECTS
Object
Location

Description

In 2018, the City Council undertook a study of the areas in the community where sidewalk gaps exist with the purpose of identifying where the City should seek to install a sidewalk to enhance safety and accessibility. A lack of sidewalks can create safety issues for pedestrians or cyclists. The areas around elementary schools are prone to having children in the area. Sidewalks also provide connectivity throughout the community, enhancing the quality of life by improving walkability.

The following years are programmed for budget purposes are the following:
Hoglan Elementary area- $900,000 in 2018 $
Multiple Areas in 3rd Ward- $500,000 in 2018 $
Palmer/Bohen area- $550,000 in 2018 $

Council has designated $500,000 in 2022 GO Bond Fund 364 to address the next area on the list - Hoglan area. The exact locations will be determined in early 2023.

All projects are for future General Obligation debt. Road Use Tax Funds cannot be used for a sidewalk project unless it is in conjuction with a street maintenance or construction project.

Justification

Expenditures	FY '23	FY '24	FY '25	FY '26	FY '27	Total
Planning & Design Engineering	50,000					50,000
Construction		450,000				450,000
Total	**50,000**	**450,000**				**500,000**

Funding Sources	FY '23	FY '24	FY '25	FY '26	FY '27	Total
364- 2022 GO BOND	50,000	450,000				500,000
Total	**50,000**	**450,000**				**500,000**

Budget Impact/Other

City Capital Plan Equipment Replacment

FY '23 *thru* FY '27

City of Marshalltown, Iowa

Department PUBLIC WORKS - INFRAST
Contact Heather Thomas

Project # SdwlkGAP
Project Name Sidewalk Gap Projects - Remaining Projects

Type Improvement
Useful Life 30 years
Category 1102011 RUT-SIDEWALKS
Priority Very Important
Status Active
Total Project Cost: $1,500,000

Division PROJECTS
Object
Location

Description

In 2018, the City Council undertook a study of the areas in the community where sidewalk gaps exist with the purpose of identifying where the City should seek to install a sidewalk to enhance safety and accessibility. A lack of sidewalks can create safety issues for pedestrians or cyclists. The areas around elementary schools are prone to having children in the area. Sidewalks also provide connectivity throughout the community, enhancing the quality of life by improving walkability.

The first project was the 12th Avenue Sidewalks (see fund 381).

The second project is for areas around Fisher Elementary and Anson Elementary (see fund 360).

The following years are programmed for budget purposes are the following:
Hoglan Elementary area- $900,000 in 2018 $
Multiple Areas in 3rd Ward- $500,000 in 2018 $
Palmer/Bohen area- $550,000 in 2018 $

Council has designated $500,000 in 2022 GO Bond Fund 364.

Budget $500,000 per year.

All projects are proposed for future General Obligation debt. Road Use Tax Funds cannot be used for a sidewalk project unless it is in conjuction with a street maintenance or construction project.

Justification

Expenditures	FY '23	FY '24	FY '25	FY '26	FY '27	Total
Construction		500,000	500,000	500,000		1,500,000
Total		**500,000**	**500,000**	**500,000**		**1,500,000**

Funding Sources	FY '23	FY '24	FY '25	FY '26	FY '27	Total
353 - CAPITAL PROJECTS		500,000	500,000	500,000		1,500,000
Total		**500,000**	**500,000**	**500,000**		**1,500,000**

Budget Impact/Other

City Capital Plan Equipment Replacment

FY '23 *thru* FY '27

City of Marshalltown, Iowa

Department PUBLIC WORKS - INFRAST
Contact Heather Thomas

Project # SRF_SP_A
Project Name Pedestrian Alley - East State Street

Type Improvement
Useful Life 20 years
Category 0012020 GEN'L - PARKING
Priority Less Important
Status Active
Total Project Cost: $350,000

Division PROJECTS
Object
Location

Description

Part of the Downtown Implementation Plan included making the alley on the south side of East State Street, east of Great Western Bank and directly adjacent to a multi-family building a pedestrian alley. This could potentially be a Sponsored Project, so it was removed from the State Street Project and is a standalone project,

This is eligible for received Sponsored Project Funds, but there are aspects of the project that are not eligible.

Estimated Budget:
30,000 Design Engineering (FY24)
285,000 Construction (20% FY24 _ 57,000 / 80% FY25 _ 228,000)
35,000 Construction Engineering (20% FY24 _ 7,000 / 80% FY25 _ 28,000)

Justification

Expenditures	FY '23	FY '24	FY '25	FY '26	FY '27	Total
Planning & Design Engineering		30,000				30,000
Construction		57,000	228,000			285,000
Construction Engineering		7,000	28,000			35,000
Total		**94,000**	**256,000**			**350,000**

Funding Sources	FY '23	FY '24	FY '25	FY '26	FY '27	Total
364- 2022 GO BOND		94,000	6,000			100,000
615 - WPCP IMPROVMNTS			250,000			250,000
Total		**94,000**	**256,000**			**350,000**

Budget Impact/Other

City Capital Plan Equipment Replacment

FY '23 *thru* FY '27

City of Marshalltown, Iowa

Department PUBLIC WORKS - INFRAST
Contact Heather Thomas

Project # STR19003
Project Name Edgewood Extension

Type Improvement
Useful Life 50 years
Category 416756 STREET FED GRANT
Priority Less Important
Status Active
Total Project Cost: $6,950,319

Division PROJECTS
Object
Location

Description

This project is to extend Edgewood Street into City-owned agricultural land in order to make a new north-south 8th Avenue connection with Marion Street. The project will open up more than 45 acres for industrial development while diverting heavy truck traffic prior to Marion Street, helping to reduce traffic-related issues at Marion Street and Highway 14/ North 3rd Avenue. The project will also address stormwater requirements for each new lot as well as a large stormwater detention basin on the north side of the industrial park.

Funding Notes:
[Dec 20] More than $4.5 million has been received from outside federal and state sources, leaving $1.66 million for the City to cover. This funding is coming from the LOST- Capital funds on-hand.
[Dec 21] Plan-It only shows $1,496,519 in LOST funds toward this project.
[Dec 22] Jessica reviewed LOST funding towards project and pulled from LOST spreadsheet a total LOST contribution of $1,528,508 towards this project.
Total construction is estimated to be $6,050,000.
Grant Administration: $20,000 (Region 6)
With other project expenses (engineering, land acquisition, etc - we are projecting to be short $104,620. Pull from RUT per JK.

Justification

This project was a recommendation of the 2018 Highway 14 Corridor Study. The City has been awarded a RISE grant from the Iowa DOT of $1.6 million towards the project, as well as a $2.95 million grant from the US Economic Development Administration (EDA).

Expenditures	FY '23	FY '24	FY '25	FY '26	FY '27	Total
Planning & Design Engineering	424,890	25,000				449,890
Construction	6,050,000					6,050,000
Total	**6,474,890**	**25,000**				**6,499,890**

Funding Sources	FY '23	FY '24	FY '25	FY '26	FY '27	Total
110 - ROAD USE TAX $	104,620					104,620
121 - LOCAL OPTION SALES TAX	1,053,079	25,000				1,078,079
311 - RISE STREET GRANTS	4,717,191					4,717,191
389- AMERICAN RESCUE PLAN	600,000					600,000
Total	**6,474,890**	**25,000**				**6,499,890**

Budget Impact/Other

$120,000 of the Fund 311 is MWW estimated contribution.

City Capital Plan Equipment Replacment

FY '23 *thru* FY '27

City of Marshalltown, Iowa

Department PUBLIC WORKS - INFRAST
Contact Heather Thomas

Project # STR21002
Project Name South Center St. Viaduct - Ph1_STR 21-002

Type Maintenance
Useful Life 25 years
Category 0012060 GEN'L-ENGINEERIN

Division PROJECTS
Object
Priority Critical
Location
Status Active
Total Project Cost: $2,571,400

Description

Includes replacing finger expansion joints with modular, repairs/replacement of smaller expansion joints, spot painting corroded superstructure areas near bearings, replacing intake pans on underside of deck, north vault structural repairs, retaining wall structural repairs, bridge railing painting/replacing.

Currently under design, anticipate Spring 2023 letting.

Justification

Expenditures	FY '23	FY '24	FY '25	FY '26	FY '27	Total
Planning & Design Engineering	160,128					160,128
Construction	500,000	1,577,600				2,077,600
Construction Engineering	30,000	120,000				150,000
Total	**690,128**	**1,697,600**				**2,387,728**

Funding Sources	FY '23	FY '24	FY '25	FY '26	FY '27	Total
363- 2021 GO BOND	690,128	1,697,600				2,387,728
Total	**690,128**	**1,697,600**				**2,387,728**

Budget Impact/Other

City Capital Plan Equipment Replacment

FY '23 *thru* FY '27

City of Marshalltown, Iowa

Department PUBLIC WORKS - INFRAST
Contact Heather Thomas

Project # STR21004
Project Name State Street Reconstruction

Type Improvement
Useful Life 50 years
Category 1102012 RUT-STREET CONS
Priority Less Important
Status Active
Total Project Cost: $7,275,641

Division PROJECTS
Object
Location

Description

This project is for the complete reconstruction of State Street from 3rd Street to 3rd Avenue, with minor improvement from 3rd to 5th Avenues.

The project was proposed as Phase 1A and Phase 1B in the Downtown Improvement Plan adopted in June 2021.

The 2021 GO Bond included $3.5 million for the project. An additional $2 million is pledged from the ARPA funds. Plus $250,000 ARPA from Edgewood & $211,741 remaining unobligated ARPA. Water Works will also be making a contribution to the project, estimated $500,00. Additional grants (40k class donation, 25k t-mobile, 125k MET, and use of sanitary sewer funds rounds out the revenues for the project.

01/03/23 - Added $100,000 of Bond 363 Funds towards funding for this project to bump contingency ($42,050.07 unspent 6th St Softball Reimbursement & $57,949.93 from Bond Interest),

Justification

Expenditures	FY '23	FY '24	FY '25	FY '26	FY '27	Total
Planning & Design Engineering	65,047					65,047
Construction	1,209,600	4,992,715				6,202,315
Equip/Vehicles/Furnishings	150,000					150,000
Construction Engineering	106,673	361,050				467,723
Total	**1,531,320**	**5,353,765**				**6,885,085**

Funding Sources	FY '23	FY '24	FY '25	FY '26	FY '27	Total
363- 2021 GO BOND	1,531,320	2,368,124				3,899,444
389- AMERICAN RESCUE PLAN		2,461,741				2,461,741
616 - SAN SWR REHAB		523,900				523,900
Total	**1,531,320**	**5,353,765**				**6,885,085**

Budget Impact/Other

MET, Class Donation, and T Mobile total $190,000 in grants - these are shown in 363 Fund.
MWW $500,000 contribution also shown in 363 Fund

City Capital Plan Equipment Replacment

FY '23 *thru* FY '27

City of Marshalltown, Iowa

Department PUBLIC WORKS - INFRAST
Contact Jessica Kinser

Project # STR22002
Project Name DIP Phase 2- East Main Street (3rd A-Cntr+Center2)

Type Improvement
Useful Life 40 years
Category 1102012 RUT-STREET CONS
Priority Less Important
Status Active

Division PROJECTS
Object
Location

Total Project Cost: **$7,800,000**

Description

Phase 2A of the 2021 Downtown Implementation Plan is the reconstruction of East Main Street from Center Street to 3rd Avenue. Phase 2B is the reconstruction of Center Street from State Street to Church Street.

This is the second planned phase in the Downtown Implementation Plan. Main Street is a busy corridor and the planned improvements are necessary to bring back the commercial vitality of the Downtown.

The 2021 estimate for the project is $5,995,741. June 21 construction was estimated at $5,103,730.50.

Assume 18% inflation first year, followed by 4% annual. Construction budget is $6,500,000
Design engineering awarded @ 654,000
Construction engineering estimated @ 646,000

Justification

Expenditures	FY '23	FY '24	FY '25	FY '26	FY '27	Total
Planning & Design Engineering	490,500	163,500				654,000
Construction		6,500,000				6,500,000
Construction Engineering		646,000				646,000
Total	**490,500**	**7,309,500**				**7,800,000**

Funding Sources	FY '23	FY '24	FY '25	FY '26	FY '27	Total
353 - CAPITAL PROJECTS		7,146,000				7,146,000
364- 2022 GO BOND	490,500	163,500				654,000
Total	**490,500**	**7,309,500**				**7,800,000**

Budget Impact/Other

City Capital Plan Equipment Replacment

FY '23 *thru* FY '27

City of Marshalltown, Iowa

Department PUBLIC WORKS - INFRAST
Contact Heather Thomas

Project # TRL_A
Project Name Iowa River's Edge Trail B2-B5

Type Improvement
Useful Life 40 years
Category 0304040 Recreation
Priority Less Important
Status Active
Total Project Cost: $1,719,420

Division PROJECTS
Object
Location

Description

The next phase of the Iowa River's Edge Trail is for Bridges 2 - Bridges 5.

Please note, there is currently no city funding for this project outside of pass through grants; however, the project is not yet fully funded. It is shown in here assuming all funds are from grants and outside sources until additional discussions are had.

Some preliminary engineering was completed previously with CGA as prime consultant. The expenses shown herein are for only Final Design through CBA and on.

Calhoun Burns Final Design Contract is $84,420. (Fund 340.4030.5233)
Construction Estimate from 11/02/22 is $1,399,593.00 w/o contingency. DOT is requiring a 10% on hand contingency due to projects coming in over cost estimate - so $1,539,552.30 use $1,540,000
Calhoun Burns estimates if city completes day to day observation, their structural/dot audit construction expenses to be around $95,000

Justification

Expenditures	FY '23	FY '24	FY '25	FY '26	FY '27	Total
Planning & Design Engineering	60,862					60,862
Construction		1,540,000				1,540,000
Construction Engineering		95,000				95,000
Total	**60,862**	**1,635,000**				**1,695,862**

Funding Sources	FY '23	FY '24	FY '25	FY '26	FY '27	Total
340 - BIKE PATH	60,862	1,635,000				1,695,862
Total	**60,862**	**1,635,000**				**1,695,862**

Budget Impact/Other

City Capital Plan Equipment Replacment

FY '23 *thru* FY '27

City of Marshalltown, Iowa

Department SAN & STRM SEWER DIVIS
Contact Heather Thomas

Project # SWR 5000 004
Project Name Air Compressor

Type Equipment
Useful Life 10 years
Category 520590 WPCP EXP-SANITAR

Division SANITARY SEWER
Object 5749.000 OTHER CAPITAL EQ
Priority Critical
Location
Status Active
Total Project Cost: **$20,000**

Description

60-40% SPLIT SAN / STM FUNDS.

This is a 185 CFM portable air compressor used by the sewer department. This is to replace an existing Atlas Copco Air Compressor that was purchased in 2005. The Altas will be cycled down as a back-up available to run two sewer crews and to loan out to other city departments who borrow it from time to time.

Justification

Expenditures	FY '23	FY '24	FY '25	FY '26	FY '27	Total
Equip/Vehicles/Furnishings			20,000			20,000
Total			**20,000**			**20,000**

Funding Sources	FY '23	FY '24	FY '25	FY '26	FY '27	Total
612 - WPCP REVENUE FUND			12,000			12,000
740/741 - STORM WATER			8,000			8,000
Total			**20,000**			**20,000**

Budget Impact/Other

Budget Items	FY '23	FY '24	FY '25	FY '26	FY '27	Total
5750.000: OTHER CAPITAL EQUIPMENT=>5,000			20,000			20,000
Total			**20,000**			**20,000**

City Capital Plan Equipment Replacment

FY '23 *thru* FY '27

City of Marshalltown, Iowa

Department SAN & STRM SEWER DIVIS
Contact Heather Thomas

Project # SWR 5000 008
Project Name TV Transporter Truck

Type Equipment
Useful Life 10 years
Category 520590 WPCP EXP-SANITAR
Priority Critical
Status Active
Total Project Cost: $100,000

Division SANITARY SEWER
Object 5749.000 OTHER CAPITAL EQ
Location

Description

60/40 Split San/Stm

This is to replace the TV Transporter Truck that contain's the City's Envirosight Television Inspection System. The system is built into a 2017 Ford Transit Truck (Asset 7038). The inspection system/truck are one piece of equipment.

City's intent would be do surplus and dispose through trade or sale of existing.

Justification

Expenditures	FY '23	FY '24	FY '25	FY '26	FY '27	Total
Equip/Vehicles/Furnishings					100,000	100,000
Total					**100,000**	**100,000**

Funding Sources	FY '23	FY '24	FY '25	FY '26	FY '27	Total
612 - WPCP REVENUE FUND					60,000	60,000
740/741 - STORM WATER					40,000	40,000
Total					**100,000**	**100,000**

Budget Impact/Other

City Capital Plan Equipment Replacment

FY '23 *thru* FY '27

City of Marshalltown, Iowa

Department SAN & STRM SEWER DIVIS
Contact Heather Thomas

Project # SWR 5000 022
Project Name Pole Camera

Type Equipment
Useful Life 10 years
Category 520590 WPCP EXP-SANITAR

Division SANITARY SEWER
Object 5749.000 OTHER CAPITAL EQ
Priority Important
Location
Status Active
Total Project Cost: **$20,000**

Description

60/40 split SAN/STM

Will replace/trade-in asset #5617, a Quik View Camera purchased in 2001.

The pole camera is a self contained camera unit that has a fixed campera on one side and a panoramic camera on the other. It includes it's own operating system/tablet.

Used for inspection of storm and sanitary sewer structures.

Justification

Expenditures	FY '23	FY '24	FY '25	FY '26	FY '27	Total
Equip/Vehicles/Furnishings			20,000			20,000
Total			**20,000**			**20,000**

Funding Sources	FY '23	FY '24	FY '25	FY '26	FY '27	Total
612 - WPCP REVENUE FUND			12,000			12,000
740/741 - STORM WATER			8,000			8,000
Total			**20,000**			**20,000**

Budget Impact/Other

City Capital Plan Equipment Replacment

FY '23 *thru* FY '27

City of Marshalltown, Iowa

Department SAN & STRM SEWER DIVIS
Contact Heather Thomas

Project # SWR 5000 023
Project Name Push Camera

Type Equipment
Useful Life 10 years
Category 528590 WPCP EXP-SANITAR
Priority Very Important
Status Active
Total Project Cost: $20,000

Division SANITARY SEWER
Object
Location

Description

Push cameras are used on small diameter lines - most frequently 2-4" sanitary sewer lines.

This will replace our 2010 Rigid Brand snake with a 200' reel that uses VHS for recording capabilities.

New is proposed to be a solid state push camera that will have a transponder on it so we can locate the end / camera portion.

We intend to surplus and sell the old push camera, as it may be desireable by a plumber.

Justification

Expenditures	FY '23	FY '24	FY '25	FY '26	FY '27	Total
Equip/Vehicles/Furnishings		20,000				20,000
Total		**20,000**				**20,000**

Funding Sources	FY '23	FY '24	FY '25	FY '26	FY '27	Total
612 - WPCP REVENUE FUND		20,000				20,000
Total		**20,000**				**20,000**

Budget Impact/Other

City Capital Plan Equipment Replacment

FY '23 *thru* FY '27

City of Marshalltown, Iowa

Department SAN & STRM SEWER DIVIS
Contact Heather Thomas

Project # VEH 9000 002
Project Name Pickup Truck - Superintendent

Type Equipment
Useful Life 10 years
Category 520590 WPCP EXP-SANITAR
Priority Critical
Status Active
Total Project Cost: $45,000

Division SANITARY SEWER
Object 5749.000 OTHER CAPITAL EQ
Location

Description

60/40 split SAN/STM

Replacement of asset #6894, a 2015 Ford F250 (3/4 Ton) Extended Cab, 4WD

Will go to a 1/2 Ton Crew cab, 4WD as 3/4 Ton is not needed. Crew Cab used to haul staff and equipment / parts that would not go in the bed (such as computer equipment).

Intent is to dispose of existing through trade or sale.

Cost Place Holder of
$45,000 expense - Raw Truck
$ 5,000 expense - Utility Lighting Package, Mudflaps, Running Boards, Bed Liner
$ 5,000 in Trade

Justification

10-Year Repalcement Cycle

Expenditures	FY '23	FY '24	FY '25	FY '26	FY '27	Total
Equip/Vehicles/Furnishings			45,000			45,000
Total			**45,000**			**45,000**

Funding Sources	FY '23	FY '24	FY '25	FY '26	FY '27	Total
612 - WPCP REVENUE FUND			27,000			27,000
740/741 - STORM WATER			18,000			18,000
Total			**45,000**			**45,000**

Budget Impact/Other

Budget Items	FY '23	FY '24	FY '25	FY '26	FY '27	Total
5750.000: OTHER CAPITAL EQUIPMENT=>5,000			35,000			35,000
Total			**35,000**			**35,000**

City Capital Plan Equipment Replacment

FY '23 *thru* FY '27

City of Marshalltown, Iowa

Department SAN & STRM SEWER DIVIS
Contact Heather Thomas

Project # VEH 9000 003
Project Name Backhoe

Type Equipment
Useful Life 15 years
Category 520590 WPCP EXP-SANITAR

Division SANITARY SEWER
Object 5749.000 OTHER CAPITAL EQ
Priority Important
Location
Status Active
Total Project Cost: $94,737

Description

60/40 split SAN/STM

To update existing equipment. City has a 1997 Case 580 Super L Backhoe w/ Extendahoe (asset 4038). Vendor won't take the 1997 as a trade-in as it is not 4-wheel assist. City plans to keep old backhoe and utilize the vibratory compactor with it for the sanitary/storm sewer departments.

Purchased 2022 Case 5805N Backhoe from Titan Machinery, Inc

Justification

Expenditures	FY '23	FY '24	FY '25	FY '26	FY '27	Total
Equip/Vehicles/Furnishings	94,737					94,737
Total	**94,737**					**94,737**

Funding Sources	FY '23	FY '24	FY '25	FY '26	FY '27	Total
612 - WPCP REVENUE FUND	56,842					56,842
740/741 - STORM WATER	37,895					37,895
Total	**94,737**					**94,737**

Budget Impact/Other

City Capital Plan Equipment Replacment

FY '23 *thru* FY '27

City of Marshalltown, Iowa

Department SAN & STRM SEWER DIVIS
Contact Heather Thomas

Project # VEH 9000 012
Project Name Jet Vacuum Truck

Type Equipment
Useful Life 12 years
Category 520590 WPCP EXP-SANITAR

Division SANITARY SEWER
Object 5749.000 OTHER CAPITAL EQ
Priority Critical
Location
Status Active
Total Project Cost: **$463,779**

Description

60/40 split SAN/STM

Self contained unit that allows vacuuming debris up (ie from inside manholes).

Existing equipment is 2011 Vactor 2100 Plus Model 2110916 (asset 6757) that was obtained in 2010. City has a hydro excavation kit attachement purchased in 2020.

City purchased a 2022 Vactor 2100i Combo Sewer Cleaner

City kept 2011 Vactor as it's back up and will be disposing an older piece of equipment.

Justification

Expenditures	FY '23	FY '24	FY '25	FY '26	FY '27	Total
Equip/Vehicles/Furnishings	463,779					463,779
Total	**463,779**					**463,779**

Funding Sources	FY '23	FY '24	FY '25	FY '26	FY '27	Total
612 - WPCP REVENUE FUND	278,267					278,267
740/741 - STORM WATER	185,512					185,512
Total	**463,779**					**463,779**

Budget Impact/Other

City Capital Plan Equipment Replacment

FY '23 *thru* FY '27

City of Marshalltown, Iowa

Department SAN & STRM SEWER DIVIS
Contact Heather Thomas

Project # VEH 9000 017
Project Name Pickup Truck - Locate Vehicle

Type Equipment
Useful Life 10 years
Category 528590 WPCP EXP-SANITAR
Priority Critical
Status Active
Total Project Cost: $35,000

Division SANITARY SEWER
Object 5749.000 OTHER CAPITAL EQ
Location

Description

60/40 split SAN/STM

Budget for 1/4 or 1/2 Ton Crew (depending on what we can find that is available and hopefully they will stop cancelling our orders). Assume 40K with 5k trade - $35k

12/22 Update HAT - Pushed from CIP FY22 to FY23. Had been ordered . Received word that Karl/Chevy cancelled the order. Existing locate truck was totaled. Insurance proceeds will be deposited into 740.8016 account in the amount of $5,150 in FY23. Sewer dept currently borrowing engineering truck to do locates.

12/21 Update HAT - Pushed from CIP FY21 to FY22. Had been ordered Received word that Karl/Chevy cancelled the order.

Used as a truck for locating utilities. Will replace asset 6256, a 2005 Ford Ranger XLT that was handed down from Utility Dept.

Justification

Expenditures	FY '23	FY '24	FY '25	FY '26	FY '27	Total
Equip/Vehicles/Furnishings	35,000					35,000
Total	**35,000**					**35,000**

Funding Sources	FY '23	FY '24	FY '25	FY '26	FY '27	Total
612 - WPCP REVENUE FUND	21,000					21,000
740/741 - STORM WATER	14,000					14,000
Total	**35,000**					**35,000**

Budget Impact/Other

City Capital Plan Equipment Replacment

FY '23 *thru* FY '27

City of Marshalltown, Iowa

Department SANITARY SEWER LIFT ST
Contact

Project # LEN 3500 001
Project Name PUMP #1 REPLACEMENT

Type Equipment
Useful Life 15 years
Category 520590 WPCP EXP-SANITAR

Division SANITARY SEWER
Object 5718.590 SABUTART SEWER-
Priority Critical
Location 2003500
Status Active
Total Project Cost: **$3,800**

Description

REPLACED 1994 AS PART OF THE LENNOX EXPANSION. 1994 PURCHASE PRICE: $2300 - REPLACED IN 2008 FOR $3,800.

Justification

Expenditures	FY '23	FY '24	FY '25	FY '26	FY '27	Total
Equip/Vehicles/Furnishings			3,800			3,800
Total			**3,800**			**3,800**

Funding Sources	FY '23	FY '24	FY '25	FY '26	FY '27	Total
612 - WPCP REVENUE FUND			3,800			3,800
Total			**3,800**			**3,800**

Budget Impact/Other

Budget Items	FY '23	FY '24	FY '25	FY '26	FY '27	Total
5718.590: SANITARY SEWER- LIFT STATION			3,800			3,800
Total			**3,800**			**3,800**

City Capital Plan Equipment Replacment

FY '23 *thru* FY '27

City of Marshalltown, Iowa

Department SANITARY SEWER LIFT ST
Contact

Project # LEN 3500 002
Project Name PUMP #2 REPLACEMENT

Type Equipment
Useful Life 15 years
Category 520590 WPCP EXP-SANITAR
Priority Critical
Status Active

Division SANITARY SEWER
Object 5718.590 SABUTART SEWER-
Location 2003500

Total Project Cost: **$3,800**

Description

REPLACED 1994 AS PART OF THE LENNOX EXPANSION. 1994 PURCHASE PRICE: $2300. REPLACED IN 2008 FOR $3,800.

Justification

Expenditures	FY '23	FY '24	FY '25	FY '26	FY '27	Total
Equip/Vehicles/Furnishings			3,800			3,800
Total			**3,800**			**3,800**

Funding Sources	FY '23	FY '24	FY '25	FY '26	FY '27	Total
612 - WPCP REVENUE FUND			3,800			3,800
Total			**3,800**			**3,800**

Budget Impact/Other

Budget Items	FY '23	FY '24	FY '25	FY '26	FY '27	Total
5718.590: SANITARY SEWER- LIFT STATION			3,800			3,800
Total			**3,800**			**3,800**

City Capital Plan Equipment Replacment

FY '23 *thru* FY '27

City of Marshalltown, Iowa

Department SANITARY SEWER LIFT ST
Contact

Project # MAI 1000 001
Project Name SEAL, CAULK, & PAINT BLOCK

Type Maintenance
Useful Life 10 years
Category 520590 WPCP EXP-SANITAR

Division SANITARY SEWER
Object 5410.590 REPAIRS/MAINT SA
Priority Critical
Location 2001000
Status Active
Total Project Cost: **$8,000**

Description

PAINT OUTSIDE AND EQUIPMENT INSIDE COST: $2700 in 1995

Justification

Expenditures	FY '23	FY '24	FY '25	FY '26	FY '27	Total
Maintenance	8,000					8,000
Total	**8,000**					**8,000**

Funding Sources	FY '23	FY '24	FY '25	FY '26	FY '27	Total
612 - WPCP REVENUE FUND	8,000					8,000
Total	**8,000**					**8,000**

Budget Impact/Other

Budget Items	FY '23	FY '24	FY '25	FY '26	FY '27	Total
5410.590: REPAIRS /MAINT SANITARY SWR LIFT STATION	8,000					8,000
Total	**8,000**					**8,000**

City Capital Plan Equipment Replacment

FY '23 *thru* FY '27

City of Marshalltown, Iowa

Department SANITARY SEWER LIFT ST
Contact

Project # MAI 1000 002
Project Name PUMP #1 REPLACEMENT-E MAIN LIFT STATION

Type Equipment
Useful Life 40 years
Category 520590 WPCP EXP-SANITAR
Priority Critical
Status Active
Total Project Cost: **$30,000**

Division SANITARY SEWER
Object 5765.000 LIFT STATIONS >5,0
Location 2001000

Description

PURCHASED IN 1974. To replace with Flygt Wet pit-Drypit pumps, new valves and piping changes. Project estimated at $16000 per pump.

Justification

Expenditures	FY '23	FY '24	FY '25	FY '26	FY '27	Total
Equip/Vehicles/Furnishings			30,000			30,000
Total			**30,000**			**30,000**

Funding Sources	FY '23	FY '24	FY '25	FY '26	FY '27	Total
612 - WPCP REVENUE FUND			30,000			30,000
Total			**30,000**			**30,000**

Budget Impact/Other

Budget Items	FY '23	FY '24	FY '25	FY '26	FY '27	Total
5765.000: LIFT STATIONS =>5,000			30,000			30,000
Total			**30,000**			**30,000**

City Capital Plan Equipment Replacment

FY '23 *thru* FY '27

City of Marshalltown, Iowa

Department SANITARY SEWER LIFT ST
Contact

Project # MAI 1000 003
Project Name PUMP #1 REBUILD

Type Maintenance
Useful Life 10 years
Category 520590 WPCP EXP-SANITAR
Priority Critical
Status Active
Total Project Cost: $3,000

Division SANITARY SEWER
Object
Location 2001000

Description

Rebuild in 1995 for $3000

Justification

Expenditures	FY '23	FY '24	FY '25	FY '26	FY '27	Total
Maintenance			3,000			3,000
Total			**3,000**			**3,000**

Funding Sources	FY '23	FY '24	FY '25	FY '26	FY '27	Total
612 - WPCP REVENUE FUND			3,000			3,000
Total			**3,000**			**3,000**

Budget Impact/Other

Budget Items	FY '23	FY '24	FY '25	FY '26	FY '27	Total
5614.590: OPERATING SUPPLY - LIFT STATIONS			3,000			3,000
Total			**3,000**			**3,000**

City Capital Plan Equipment Replacment

FY '23 *thru* FY '27

City of Marshalltown, Iowa

Department SANITARY SEWER LIFT ST
Contact

Project # MAI 1000 004
Project Name PUMP #2 REPLACEMENT-E MAIN LIFT STATION

Type Equipment
Useful Life 40 years
Category 520590 WPCP EXP-SANITAR
Priority Critical
Status Active
Total Project Cost: **$30,000**

Division SANITARY SEWER
Object 5765.000 LIFT STATIONS >5,0
Location 2001000

Description

PURCHASED IN 1974. EST COST $6,000

Justification

Expenditures	FY '23	FY '24	FY '25	FY '26	FY '27	Total
Equip/Vehicles/Furnishings			30,000			30,000
Total			**30,000**			**30,000**

Funding Sources	FY '23	FY '24	FY '25	FY '26	FY '27	Total
612 - WPCP REVENUE FUND			30,000			30,000
Total			**30,000**			**30,000**

Budget Impact/Other

Budget Items	FY '23	FY '24	FY '25	FY '26	FY '27	Total
5765.000: LIFT STATIONS =>5,000			30,000			30,000
Total			**30,000**			**30,000**

City Capital Plan Equipment Replacment

FY '23 *thru* FY '27

City of Marshalltown, Iowa

Department SANITARY SEWER LIFT ST
Contact

Project # MAI 1000 005
Project Name PUMP #2 REBUILD

Type Maintenance
Useful Life 10 years
Category 520590 WPCP EXP-SANITAR

Division SANITARY SEWER
Object 5600.590 OPERATING SUPPL
Priority Critical
Location 2001000
Status Active
Total Project Cost: **$3,000**

Description

COST: $3000 PURCHASE DATE: 1/1/2001 MFG YEAR: 1988 PURCHASE PRICE: $3000

Justification

Expenditures	FY '23	FY '24	FY '25	FY '26	FY '27	Total
Maintenance					3,000	3,000
Total					**3,000**	**3,000**

Funding Sources	FY '23	FY '24	FY '25	FY '26	FY '27	Total
612 - WPCP REVENUE FUND					3,000	3,000
Total					**3,000**	**3,000**

Budget Impact/Other

Budget Items	FY '23	FY '24	FY '25	FY '26	FY '27	Total
5614.590: OPERATING SUPPLY - LIFT STATIONS					3,000	3,000
Total					**3,000**	**3,000**

City Capital Plan Equipment Replacment

FY '23 *thru* FY '27

City of Marshalltown, Iowa

Department SANITARY SEWER LIFT ST
Contact

Project # MAI 1000 007
Project Name TELEMETRY UPGRADE-E MAIN LIFT STATION

Type Equipment
Useful Life 15 years
Category 520590 WPCP EXP-SANITAR
Priority Critical
Status Active
Total Project Cost: **$40,000**

Division SANITARY SEWER
Object 5765.000 LIFT STATIONS >5,0
Location 2001000

Description

RADIO TELEMETRY PURCHASED IN 2003 FOR $18,000. RADIO UPGRADE=$13000

Justification

Expenditures	FY '23	FY '24	FY '25	FY '26	FY '27	Total
Equip/Vehicles/Furnishings		25,000				25,000
Total		**25,000**				**25,000**

Funding Sources	FY '23	FY '24	FY '25	FY '26	FY '27	Total
612 - WPCP REVENUE FUND		25,000				25,000
Total		**25,000**				**25,000**

Budget Impact/Other

Budget Items	FY '23	FY '24	FY '25	FY '26	FY '27	Total
5765.000: LIFT STATIONS =>5,000		25,000				25,000
Total		**25,000**				**25,000**

City Capital Plan Equipment Replacment

FY '23 *thru* FY '27

City of Marshalltown, Iowa

Department SANITARY SEWER LIFT ST
Contact

Project # MAI 1000 008
Project Name LEVEL CONTROLLER

Type Equipment
Useful Life 15 years
Category 520590 WPCP EXP-SANITAR
Priority Critical
Status Active
Total Project Cost: $4,200

Division SANITARY SEWER
Object 5718.590 SABUTART SEWER-
Location 2001000

Description

Purchased in 2002 for $1800. FAILURE IN SEPT. 2009 - REPLACED FOR $2,100.

Justification

Expenditures	FY '23	FY '24	FY '25	FY '26	FY '27	Total
Equip/Vehicles/Furnishings			2,100			2,100
Total			**2,100**			**2,100**

Funding Sources	FY '23	FY '24	FY '25	FY '26	FY '27	Total
612 - WPCP REVENUE FUND			2,100			2,100
Total			**2,100**			**2,100**

Budget Impact/Other

Budget Items	FY '23	FY '24	FY '25	FY '26	FY '27	Total
5718.590: SANITARY SEWER- LIFT STATION			2,100			2,100
Total			**2,100**			**2,100**

City Capital Plan Equipment Replacment

FY '23 *thru* FY '27

City of Marshalltown, Iowa

Department SANITARY SEWER LIFT ST
Contact

Project # MAR 2000 005
Project Name ELECTRICAL PANEL MAINTENANCE

Type Maintenance
Useful Life 15 years
Category 520590 WPCP EXP-SANITAR
Priority Critical
Status Active
Total Project Cost: $8,000

Division SANITARY SEWER
Object
Location 2002000

Description

This was done as a part of the telemetry upgrade In 2002

Justification

Expenditures	FY '23	FY '24	FY '25	FY '26	FY '27	Total
Maintenance		8,000				8,000
Total		**8,000**				**8,000**

Funding Sources	FY '23	FY '24	FY '25	FY '26	FY '27	Total
612 - WPCP REVENUE FUND		8,000				8,000
Total		**8,000**				**8,000**

Budget Impact/Other

Budget Items	FY '23	FY '24	FY '25	FY '26	FY '27	Total
5614.590: OPERATING SUPPLY - LIFT STATIONS		8,000				8,000
Total		**8,000**				**8,000**

City Capital Plan Equipment Replacment

FY '23 *thru* FY '27

City of Marshalltown, Iowa

Department SANITARY SEWER LIFT ST
Contact

Project # MAR 2000 008
Project Name SPARE PUMP

Type Equipment
Useful Life 20 years
Category 520590 WPCP EXP-SANITAR

Division SANITARY SEWER
Object
Priority Critical
Location 2002000
Status Active
Total Project Cost: **$3,200**

Description

Spare pump to provide system maintenance. New Purchase 10/1/2004 COST: $3200

Justification

Expenditures	FY '23	FY '24	FY '25	FY '26	FY '27	Total
Equip/Vehicles/Furnishings				3,200		3,200
Total				**3,200**		**3,200**

Funding Sources	FY '23	FY '24	FY '25	FY '26	FY '27	Total
612 - WPCP REVENUE FUND				3,200		3,200
Total				**3,200**		**3,200**

Budget Impact/Other

Budget Items	FY '23	FY '24	FY '25	FY '26	FY '27	Total
5718.590: SANITARY SEWER- LIFT STATION				3,200		3,200
Total				**3,200**		**3,200**

City Capital Plan Equipment Replacment

FY '23 *thru* FY '27

City of Marshalltown, Iowa

Department SANITARY SEWER LIFT ST
Contact

Project # ROL 4000 009
Project Name LIFT STATION BLDG REPAIR

Type Maintenance
Useful Life 10 years
Category 520590 WPCP EXP-SANITAR
Priority Critical
Status Active

Division SANITARY SEWER
Object 5410.590 REPAIRS/MAINT SA
Location 2004000

Description

Repair to the floor of the lift station enclosure

Justification

Expenditures	FY '23	FY '24	FY '25	FY '26	FY '27	Total
Maintenance	50,000					50,000
Total	**50,000**					**50,000**

Funding Sources	FY '23	FY '24	FY '25	FY '26	FY '27	Total
612 - WPCP REVENUE FUND	50,000					50,000
Total	**50,000**					**50,000**

City Capital Plan Equipment Replacment

FY '23 *thru* FY '27

City of Marshalltown, Iowa

Department SANITARY SEWER LIFT ST
Contact

Project # SUM 6000 001
Project Name PUMP #1 REPLACEMENT

Type Equipment
Useful Life 15 years
Category 520590 WPCP EXP-SANITAR
Priority Critical
Status Active
Total Project Cost: $4,000

Division SANITARY SEWER
Object
Location 2006000

Description

Purchased in 1988 for $4000. PURCHASED ON 10-1-07. INSTALLED 3-09

Justification

Expenditures	FY '23	FY '24	FY '25	FY '26	FY '27	Total
Equip/Vehicles/Furnishings		4,000				4,000
Total		**4,000**				**4,000**

Funding Sources	FY '23	FY '24	FY '25	FY '26	FY '27	Total
612 - WPCP REVENUE FUND		4,000				4,000
Total		**4,000**				**4,000**

Budget Impact/Other

Budget Items	FY '23	FY '24	FY '25	FY '26	FY '27	Total
5718.590: SANITARY SEWER- LIFT STATION		4,000				4,000
Total		**4,000**				**4,000**

City Capital Plan Equipment Replacment

FY '23 *thru* FY '27

City of Marshalltown, Iowa

Department SANITARY SEWER LIFT ST
Contact

Project # SUM 6000 003
Project Name PUMP #2 REPLACEMENT

Type Equipment
Useful Life 15 years
Category 520590 WPCP EXP-SANITAR

Division SANITARY SEWER
Object
Priority Critical
Location 2006000
Status Active
Total Project Cost: $4,000

Description

Purchased in 1988 for $4000. PURCHASED ON 10-1-07. INSTALLED 3-09

Justification

Expenditures	FY '23	FY '24	FY '25	FY '26	FY '27	Total
Equip/Vehicles/Furnishings		4,000				4,000
Total		**4,000**				**4,000**

Funding Sources	FY '23	FY '24	FY '25	FY '26	FY '27	Total
612 - WPCP REVENUE FUND		4,000				4,000
Total		**4,000**				**4,000**

Budget Impact/Other

Budget Items	FY '23	FY '24	FY '25	FY '26	FY '27	Total
5718.590: SANITARY SEWER- LIFT STATION		4,000				4,000
Total		**4,000**				**4,000**

City Capital Plan Equipment Replacment

FY '23 *thru* FY '27

City of Marshalltown, Iowa

Department SANITARY SEWER LIFT ST
Contact

Project # SWR 5000 002
Project Name REPLACE 50KW PORT. GENERATOR-SANITARY SEWERS

Type Equipment
Useful Life 30 years
Category 520590 WPCP EXP-SANITAR
Priority Critical
Status Active
Total Project Cost: $75,000

Division SANITARY SEWER
Object 5765.000 LIFT STATIONS >5,0
Location 2005000

Description

SEE WPCP FOR PREVENTIVE MAINTENANCE . PURCHASED IN 1988 FOR $17,000.

Justification

Expenditures	FY '23	FY '24	FY '25	FY '26	FY '27	Total
Equip/Vehicles/Furnishings					75,000	75,000
Total					**75,000**	**75,000**

Funding Sources	FY '23	FY '24	FY '25	FY '26	FY '27	Total
612 - WPCP REVENUE FUND					75,000	75,000
Total					**75,000**	**75,000**

Budget Impact/Other

Budget Items	FY '23	FY '24	FY '25	FY '26	FY '27	Total
5765.000: LIFT STATIONS =>5,000					75,000	75,000
Total					**75,000**	**75,000**

City Capital Plan Equipment Replacment

FY '23 *thru* FY '27

City of Marshalltown, Iowa

Department SANITARY SEWER LIFT ST
Contact

Project # TUR 7000 001
Project Name PAINT, SEAL, CAULK, & PAINT ROOF-TURNER LIFT STATI

Type Maintenance
Useful Life 10 years
Category 520590 WPCP EXP-SANITAR
Priority Critical
Status Active

Division SANITARY SEWER
Object 5410.590 REPAIRS/MAINT SA
Location 2007000

Total Project Cost: **$10,000**

Description

INCLUDES - PAINTING INSIDE PIPING, OUTSIDE BLOCK & ROOF, CAULKING OF JOINTS. LAST COMPLETED IN 1995 FOR $6,000. WILL NOT BE DONE UNTIL AFTER THE LIFT STATION PUMPS AND PIPING REPLACED.

Justification

Expenditures	FY '23	FY '24	FY '25	FY '26	FY '27	Total
Maintenance				10,000		10,000
Total				**10,000**		**10,000**

Funding Sources	FY '23	FY '24	FY '25	FY '26	FY '27	Total
612 - WPCP REVENUE FUND				10,000		10,000
Total				**10,000**		**10,000**

Budget Impact/Other

Budget Items	FY '23	FY '24	FY '25	FY '26	FY '27	Total
5410.590: REPAIRS /MAINT SANITARY SWR LIFT STATION				10,000		10,000
Total				**10,000**		**10,000**

City Capital Plan Equipment Replacment

FY '23 *thru* FY '27

City of Marshalltown, Iowa

Department SANITARY SEWER LIFT ST
Contact

Project # TUR 7000 013
Project Name ELECTRICAL PANEL MAINTENANCE-TURNER LIFT STATI

Type Maintenance
Useful Life 10 years
Category 520590 WPCP EXP-SANITAR
Priority Critical
Status Active
Total Project Cost: $8,000

Division SANITARY SEWER
Object 5765.000 LIFT STATIONS >5,0
Location 2007000

Description

LAST REBUILD WAS IN 1999 FOR $6,000. UPGRADE IN 2009 CONST. PROJECT

Justification

Expenditures	FY '23	FY '24	FY '25	FY '26	FY '27	Total
Maintenance				8,000		8,000
Total				**8,000**		**8,000**

Funding Sources	FY '23	FY '24	FY '25	FY '26	FY '27	Total
612 - WPCP REVENUE FUND				8,000		8,000
Total				**8,000**		**8,000**

Budget Impact/Other

Budget Items	FY '23	FY '24	FY '25	FY '26	FY '27	Total
5765.000: LIFT STATIONS =>5,000				8,000		8,000
Total				**8,000**		**8,000**

City Capital Plan Equipment Replacment

FY '23 *thru* FY '27

City of Marshalltown, Iowa

Department SANITARY SEWER LIFT ST
Contact

Project # TUR 7000 014
Project Name RADIO TELEMETRY SYSTEM-TURNER LIFT STATION

Type Equipment
Useful Life 15 years
Category 520590 WPCP EXP-SANITAR
Priority Critical
Status Active
Total Project Cost: $18,000

Division SANITARY SEWER
Object 5765.000 LIFT STATIONS >5,0
Location 2007000

Description

RADIO TELEMETRY PURCHASED IN 1999 FOR $18,000. UPGRADE IN 2009 CONST. PROJECT

Justification

Expenditures	FY '23	FY '24	FY '25	FY '26	FY '27	Total
Equip/Vehicles/Furnishings		18,000				18,000
Total		**18,000**				**18,000**

Funding Sources	FY '23	FY '24	FY '25	FY '26	FY '27	Total
612 - WPCP REVENUE FUND		18,000				18,000
Total		**18,000**				**18,000**

Budget Impact/Other

Budget Items	FY '23	FY '24	FY '25	FY '26	FY '27	Total
5765.000: LIFT STATIONS =>5,000		18,000				18,000
Total		**18,000**				**18,000**

City Capital Plan Equipment Replacment

FY '23 *thru* FY '27

City of Marshalltown, Iowa

Department SANITARY SEWER LIFT ST
Contact

Project # TUR 7000 016
Project Name SIPHON FLOW METER

Type Equipment
Useful Life 15 years
Category 520590 WPCP EXP-SANITAR

Division SANITARY SEWER
Object 5718.590 SABUTART SEWER-
Priority Critical
Location 2007000
Status Active
Total Project Cost: **$1,800**

Description

INSTALLED IN PROJECT 2009

Justification

Expenditures	FY '23	FY '24	FY '25	FY '26	FY '27	Total
Equip/Vehicles/Furnishings				1,800		1,800
Total				**1,800**		**1,800**

Funding Sources	FY '23	FY '24	FY '25	FY '26	FY '27	Total
612 - WPCP REVENUE FUND				1,800		1,800
Total				**1,800**		**1,800**

Budget Impact/Other

Budget Items	FY '23	FY '24	FY '25	FY '26	FY '27	Total
5718.590: SANITARY SEWER- LIFT STATION				1,800		1,800
Total				**1,800**		**1,800**

City Capital Plan Equipment Replacment

FY '23 *thru* FY '27

City of Marshalltown, Iowa

Department SANITARY SEWER LIFT ST
Contact

Project # TUR 7000 017
Project Name SIPHON WETWELL METER

Type Equipment
Useful Life 15 years
Category 520590 WPCP EXP-SANITAR

Division SANITARY SEWER
Object
Priority Critical
Location 2007000
Status Active
Total Project Cost: **$1,800**

Description

INSTALLED IN PROJECT 2009

Justification

Expenditures	FY '23	FY '24	FY '25	FY '26	FY '27	Total
Equip/Vehicles/Furnishings				1,800		1,800
Total				**1,800**		**1,800**

Funding Sources	FY '23	FY '24	FY '25	FY '26	FY '27	Total
612 - WPCP REVENUE FUND				1,800		1,800
Total				**1,800**		**1,800**

Budget Impact/Other

Budget Items	FY '23	FY '24	FY '25	FY '26	FY '27	Total
5718.590: SANITARY SEWER- LIFT STATION				1,800		1,800
Total				**1,800**		**1,800**

City Capital Plan Equipment Replacment

FY '23 *thru* FY '27

City of Marshalltown, Iowa

Department SANITARY SEWER LIFT ST
Contact

Project # TUR 7000 018
Project Name ACTUATOR/ WEIR GATE

Type Equipment
Useful Life 15 years
Category 520590 WPCP EXP-SANITAR
Priority Critical
Status Active
Total Project Cost: $4,000

Division SANITARY SEWER
Object
Location 2007000

Description

INSTALLED IN PROJECT 2009

Justification

Expenditures	FY '23	FY '24	FY '25	FY '26	FY '27	Total
Equip/Vehicles/Furnishings				4,000		4,000
Total				**4,000**		**4,000**

Funding Sources	FY '23	FY '24	FY '25	FY '26	FY '27	Total
612 - WPCP REVENUE FUND				4,000		4,000
Total				**4,000**		**4,000**

Budget Impact/Other

Budget Items	FY '23	FY '24	FY '25	FY '26	FY '27	Total
5718.590: SANITARY SEWER- LIFT STATION				4,000		4,000
Total				**4,000**		**4,000**

City Capital Plan Equipment Replacment

FY '23 *thru* FY '27

City of Marshalltown, Iowa

Department SANITARY SEWER LIFT ST
Contact

Project # TUR 7000 019
Project Name ACTUATOR/PLANT GATE

Type Equipment
Useful Life 15 years
Category 520590 WPCP EXP-SANITAR

Division SANITARY SEWER
Object
Priority Critical
Location 2007000
Status Active
Total Project Cost: $4,000

Description

INSTALLED IN PROJECT 2009

Justification

Expenditures	FY '23	FY '24	FY '25	FY '26	FY '27	Total
Equip/Vehicles/Furnishings				4,000		4,000
Total				**4,000**		**4,000**

Funding Sources	FY '23	FY '24	FY '25	FY '26	FY '27	Total
612 - WPCP REVENUE FUND				4,000		4,000
Total				**4,000**		**4,000**

Budget Impact/Other

Budget Items	FY '23	FY '24	FY '25	FY '26	FY '27	Total
5718.590: SANITARY SEWER- LIFT STATION				4,000		4,000
Total				**4,000**		**4,000**

City Capital Plan Equipment Replacment

FY '23 *thru* FY '27

City of Marshalltown, Iowa

Department SANITARY SEWER LIFT ST
Contact

Project # YMC 9500 001
Project Name PAINT INTERIOR

Type Maintenance
Useful Life 20 years
Category 520590 WPCP EXP-SANITAR

Division SANITARY SEWER
Object
Priority Critical
Location 2009500
Status Active
Total Project Cost: $4,950

Description

SANDBLAST DRY WELL AND PAINT EQUIPMENT. BID AS PART OF PLANT PAINTING PROJECT. PAINTED IN 2005

Justification

Expenditures	FY '23	FY '24	FY '25	FY '26	FY '27	Total
Maintenance			4,950			4,950
Total			**4,950**			**4,950**

Funding Sources	FY '23	FY '24	FY '25	FY '26	FY '27	Total
612 - WPCP REVENUE FUND			4,950			4,950
Total			**4,950**			**4,950**

Budget Impact/Other

Budget Items	FY '23	FY '24	FY '25	FY '26	FY '27	Total
5410.590: REPAIRS /MAINT SANITARY SWR LIFT STATION			4,950			4,950
Total			**4,950**			**4,950**

City Capital Plan Equipment Replacment

FY '23 *thru* FY '27

City of Marshalltown, Iowa

Department SANITARY SEWER LIFT ST
Contact

Project # YMC 9500 002
Project Name ROOF REPLACEMENT

Type Maintenance
Useful Life 15 years
Category 520590 WPCP EXP-SANITAR
Priority Critical
Status Active
Total Project Cost: $5,000

Division SANITARY SEWER
Object
Location 2009500

Description

NEW MEMBRANE ROOF IN 2012

Justification

Expenditures	FY '23	FY '24	FY '25	FY '26	FY '27	Total
Maintenance					5,000	5,000
Total					**5,000**	**5,000**

Funding Sources	FY '23	FY '24	FY '25	FY '26	FY '27	Total
612 - WPCP REVENUE FUND					5,000	5,000
Total					**5,000**	**5,000**

Budget Impact/Other

Budget Items	FY '23	FY '24	FY '25	FY '26	FY '27	Total
5410.590: REPAIRS /MAINT SANITARY SWR LIFT STATION					5,000	5,000
Total					**5,000**	**5,000**

City Capital Plan Equipment Replacment

FY '23 *thru* FY '27

City of Marshalltown, Iowa

Department SANITARY SEWER LIFT ST
Contact

Project # YMC 9500 004
Project Name PUMP #1 REPLACEMENT -YMCA LIFT STATION

Type Equipment
Useful Life 20 years
Category 520590 WPCP EXP-SANITAR
Priority Critical
Status Active
Total Project Cost: **$15,000**

Division SANITARY SEWER
Object 5765.000 LIFT STATIONS >5,0
Location 2009500

Description

REPLACED IN DECEMBER OF 2002 FOR $10,000.

Justification

Expenditures	FY '23	FY '24	FY '25	FY '26	FY '27	Total
Equip/Vehicles/Furnishings	15,000					15,000
Total	**15,000**					**15,000**

Funding Sources	FY '23	FY '24	FY '25	FY '26	FY '27	Total
612 - WPCP REVENUE FUND	15,000					15,000
Total	**15,000**					**15,000**

Budget Impact/Other

Budget Items	FY '23	FY '24	FY '25	FY '26	FY '27	Total
5765.000: LIFT STATIONS =>5,000	15,000					15,000
Total	**15,000**					**15,000**

City Capital Plan Equipment Replacment

FY '23 *thru* FY '27

City of Marshalltown, Iowa

Department SANITARY SEWER LIFT ST
Contact

Project # YMC 9500 006
Project Name PUMP #2 REPLACEMENT-YMCA LIFT STATION

Type Equipment
Useful Life 20 years
Category 520590 WPCP EXP-SANITAR
Priority Critical
Status Active
Total Project Cost: **$15,000**

Division SANITARY SEWER
Object 5765.000 LIFT STATIONS >5,0
Location 2009500

Description

REPLACED IN DECEMBER OF 2002 FOR $10,000.

Justification

Expenditures	FY '23	FY '24	FY '25	FY '26	FY '27	Total
Equip/Vehicles/Furnishings		15,000				15,000
Total		**15,000**				**15,000**

Funding Sources	FY '23	FY '24	FY '25	FY '26	FY '27	Total
612 - WPCP REVENUE FUND		15,000				15,000
Total		**15,000**				**15,000**

Budget Impact/Other

Budget Items	FY '23	FY '24	FY '25	FY '26	FY '27	Total
5765.000: LIFT STATIONS =>5,000		15,000				15,000
Total		**15,000**				**15,000**

City Capital Plan Equipment Replacment

FY '23 *thru* FY '27

City of Marshalltown, Iowa

Department SANITARY SEWER LIFT ST
Contact

Project # YMC 9500 008
Project Name PUMP #3 REPLACEMENT-YMCA LIFT STATION

Type Equipment
Useful Life 20 years
Category 520590 WPCP EXP-SANITAR
Priority Critical
Status Active
Total Project Cost: **$15,000**

Division SANITARY SEWER
Object 5765.000 LIFT STATIONS >5,0
Location 2009500

Description

PUMPS ARE FAILING, NEW MODEL REQUIRES SOME PIPING CHANGES. COST: $10000 PURCHASE DATE: 12/1/2002 MFG YEAR: 1974 PURCHASE PRICE: $10000

Justification

Expenditures	FY '23	FY '24	FY '25	FY '26	FY '27	Total
Equip/Vehicles/Furnishings		15,000				15,000
Total		**15,000**				**15,000**

Funding Sources	FY '23	FY '24	FY '25	FY '26	FY '27	Total
612 - WPCP REVENUE FUND		15,000				15,000
Total		**15,000**				**15,000**

Budget Impact/Other

Budget Items	FY '23	FY '24	FY '25	FY '26	FY '27	Total
5765.000: LIFT STATIONS =>5,000		15,000				15,000
Total		**15,000**				**15,000**

City Capital Plan Equipment Replacment

FY '23 *thru* FY '27

City of Marshalltown, Iowa

Department SANITARY SEWER LIFT ST
Contact

Project # YMC 9500 011
Project Name STANDBY GEN. REPLACEMENT-YMCA LIFT STATION

Type Equipment
Useful Life 30 years
Category 520590 WPCP EXP-SANITAR
Priority Critical
Status Active
Total Project Cost: $50,000

Division SANITARY SEWER
Object 5765.000 LIFT STATIONS >5,0
Location 2009500

Description

PURCHASED IN 1989 FOR $16,000.

Justification

Expenditures	FY '23	FY '24	FY '25	FY '26	FY '27	Total
Equip/Vehicles/Furnishings	50,000					50,000
Total	**50,000**					**50,000**

Funding Sources	FY '23	FY '24	FY '25	FY '26	FY '27	Total
612 - WPCP REVENUE FUND	50,000					50,000
Total	**50,000**					**50,000**

Budget Impact/Other

Budget Items	FY '23	FY '24	FY '25	FY '26	FY '27	Total
5765.000: LIFT STATIONS =>5,000	50,000					50,000
Total	**50,000**					**50,000**

City Capital Plan Equipment Replacment

FY '23 *thru* FY '27

City of Marshalltown, Iowa

Department STORM SEWER LIFT STATI
Contact

Project # 18A 5910 001
Project Name MAJ REBUILD DISCHARG PUMP # 1-18TH AVE STATION

Type Maintenance
Useful Life 20 years
Category 510531 STRM SEWER UTLT
Priority Critical
Status Active
Total Project Cost: $85,000

Division STORM WATER
Object 5765.000 LIFT STATIONS >5,0
Location 2005910

Description

MAJOR REBUILD INCLUDES REMOVAL, SEALS, BEARINGS AND O-RINGS. WORK TO BE DONE BY OUTSIDE CONTRACTOR. COST: $8000 LAST DONE IN 1998. MAJOR REBUILD TO BE DONE IN 2011.

Justification

Expenditures	FY '23	FY '24	FY '25	FY '26	FY '27	Total
Maintenance		50,000				50,000
Total		**50,000**				**50,000**

Funding Sources	FY '23	FY '24	FY '25	FY '26	FY '27	Total
740/741 - STORM WATER		50,000				50,000
Total		**50,000**				**50,000**

Budget Impact/Other

Budget Items	FY '23	FY '24	FY '25	FY '26	FY '27	Total
5765.000: LIFT STATIONS =>5,000		50,000				50,000
Total		**50,000**				**50,000**

City Capital Plan Equipment Replacment

FY '23 *thru* FY '27

City of Marshalltown, Iowa

Department STORM SEWER LIFT STATI
Contact

Project # 18A 5910 011
Project Name TELEMETRY-18TH AVE STATION

Type Equipment
Useful Life 15 years
Category 510531 STRM SEWER UTLT
Priority Critical
Status Active
Total Project Cost: $50,000

Division STORM WATER
Object 5765.000 LIFT STATIONS >5,0
Location 2005910

Description

PURCHASED IN 1998 FOR $17,000. UPGRADE RADIO AND CONNECTION TO PLC. DID NOT GET COMPLETED IN FY 2009, SO WAS IN FY2010 BUDGET. INCLUDED PROGRAMMING OF SLC500 PLC @ 18AV AND INSTALLTION OF ANTENNA @ PRELIM, COST $19,000.

Justification

Expenditures	FY '23	FY '24	FY '25	FY '26	FY '27	Total
Equip/Vehicles/Furnishings		50,000				50,000
Total		**50,000**				**50,000**

Funding Sources	FY '23	FY '24	FY '25	FY '26	FY '27	Total
740/741 - STORM WATER		50,000				50,000
Total		**50,000**				**50,000**

Budget Impact/Other

Budget Items	FY '23	FY '24	FY '25	FY '26	FY '27	Total
5765.000: LIFT STATIONS =>5,000		50,000				50,000
Total		**50,000**				**50,000**

City Capital Plan Equipment Replacment

FY '23 *thru* FY '27

City of Marshalltown, Iowa

Department STORM SEWER LIFT STATI
Contact

Project # 18A 5910 012
Project Name REPLACE DRAIN MH PUMP # 1-18TH AVE STATION

Type Equipment
Useful Life 20 years
Category 510531 STRM SEWER UTLT
Priority Critical
Status Active
Total Project Cost: $10,000

Division STORM WATER
Object 5765.000 LIFT STATIONS >5,0
Location 2005910

Description

PURCHASED IN 1998 FOR $7,000.

Justification

Expenditures	FY '23	FY '24	FY '25	FY '26	FY '27	Total
Equip/Vehicles/Furnishings			10,000			10,000
Total			**10,000**			**10,000**

Funding Sources	FY '23	FY '24	FY '25	FY '26	FY '27	Total
740/741 - STORM WATER			10,000			10,000
Total			**10,000**			**10,000**

Budget Impact/Other

Budget Items	FY '23	FY '24	FY '25	FY '26	FY '27	Total
5765.000: LIFT STATIONS =>5,000			10,000			10,000
Total			**10,000**			**10,000**

City Capital Plan Equipment Replacment

FY '23 *thru* FY '27

City of Marshalltown, Iowa

Department STORM SEWER LIFT STATI
Contact

Project # 18A 5910 013
Project Name REPLACE DRAIN MH PUMP # 2-18TH AVE STATION

Type Equipment
Useful Life 20 years
Category 510531 STRM SEWER UTLT
Priority Critical
Status Active
Total Project Cost: $10,000

Division STORM WATER
Object 5765.000 LIFT STATIONS >5,0
Location 2005910

Description

PURCHASED IN 1998 FOR $7,000.

Justification

Expenditures	FY '23	FY '24	FY '25	FY '26	FY '27	Total
Equip/Vehicles/Furnishings			10,000			10,000
Total			**10,000**			**10,000**

Funding Sources	FY '23	FY '24	FY '25	FY '26	FY '27	Total
740/741 - STORM WATER			10,000			10,000
Total			**10,000**			**10,000**

Budget Impact/Other

Budget Items	FY '23	FY '24	FY '25	FY '26	FY '27	Total
5765.000: LIFT STATIONS =>5,000			10,000			10,000
Total			**10,000**			**10,000**

City Capital Plan Equipment Replacment

FY '23 *thru* FY '27

City of Marshalltown, Iowa

Department STORM SEWER LIFT STATI
Contact

Project # 18A 5910 014
Project Name SEAL, CAULK & PAINT-18TH AVE STATION

Type Maintenance
Useful Life 10 years
Category 510531 STRM SEWER UTLT
Priority Critical
Status Active
Total Project Cost: $10,000

Division STORM WATER
Object 5410.531 REPAIRS/MAINT ST
Location 2005910

Description

PAINT STATION-INSIDE AND OUT

Justification

Expenditures	FY '23	FY '24	FY '25	FY '26	FY '27	Total
Maintenance	10,000					10,000
Total	**10,000**					**10,000**

Funding Sources	FY '23	FY '24	FY '25	FY '26	FY '27	Total
740/741 - STORM WATER	10,000					10,000
Total	**10,000**					**10,000**

Budget Impact/Other

Budget Items	FY '23	FY '24	FY '25	FY '26	FY '27	Total
5410.531: REPAIRS / MAINT STORM SWR LIFT STATION	10,000					10,000
Total	**10,000**					**10,000**

City Capital Plan Equipment Replacment

FY '23 *thru* FY '27

City of Marshalltown, Iowa

Department STORM SEWER LIFT STATI
Contact

Project # 18A 5910 018
Project Name AIR CONDITIONING UNIT-1 NORTH

Type Equipment
Useful Life 10 years
Category 510531 STRM SEWER UTLT
Priority Critical
Status Active
Total Project Cost: $8,000

Division STORM WATER
Object 5765.000 LIFT STATIONS >5,0
Location 2005910

Description

AIR CONDITIONING UNIT AT NORTH END OF MOTOR CONTROL ENCLOSURE

Justification

Expenditures	FY '23	FY '24	FY '25	FY '26	FY '27	Total
Equip/Vehicles/Furnishings		8,000				8,000
Total		**8,000**				**8,000**

Funding Sources	FY '23	FY '24	FY '25	FY '26	FY '27	Total
740/741 - STORM WATER		8,000				8,000
Total		**8,000**				**8,000**

Budget Impact/Other

Budget Items	FY '23	FY '24	FY '25	FY '26	FY '27	Total
5765.000: LIFT STATIONS =>5,000		8,000				8,000
Total		**8,000**				**8,000**

City Capital Plan Equipment Replacment

FY '23 *thru* FY '27

City of Marshalltown, Iowa

Department STORM SEWER LIFT STATI
Contact

Project # 18A 5910 019
Project Name AIR CONDITIONING UNIT-2 SOUTH

Type Equipment
Useful Life 10 years
Category 510531 STRM SEWER UTLT
Priority Critical
Status Active
Total Project Cost: $8,000

Division STORM WATER
Object 5765.000 LIFT STATIONS >5,0
Location 2005910

Description

AIR CONDITIONING UNIT AT SOUTH END OF MOTOR CONTROL ENCLOSURE

Justification

Expenditures	FY '23	FY '24	FY '25	FY '26	FY '27	Total
Equip/Vehicles/Furnishings		8,000				8,000
Total		**8,000**				**8,000**

Funding Sources	FY '23	FY '24	FY '25	FY '26	FY '27	Total
740/741 - STORM WATER		8,000				8,000
Total		**8,000**				**8,000**

Budget Impact/Other

Budget Items	FY '23	FY '24	FY '25	FY '26	FY '27	Total
5765.000: LIFT STATIONS =>5,000		8,000				8,000
Total		**8,000**				**8,000**

City Capital Plan Equipment Replacment

FY '23 *thru* FY '27

City of Marshalltown, Iowa

Department STORM SEWER LIFT STATI
Contact

Project # 18A 5910 020
Project Name WET WELL CLEANING

Type Maintenance
Useful Life 5 years
Category 510531 STRM SEWER UTLT
Priority Important
Status Active
Total Project Cost: $50,000

Division STORM WATER
Object 5410.531 REPAIRS/MAINT ST
Location 2005910

Description

Removal of sand build up

Justification

Expenditures	FY '23	FY '24	FY '25	FY '26	FY '27	Total
Maintenance		50,000				50,000
Total		**50,000**				**50,000**

Funding Sources	FY '23	FY '24	FY '25	FY '26	FY '27	Total
740/741 - STORM WATER		50,000				50,000
Total		**50,000**				**50,000**

Budget Impact/Other

Budget Items	FY '23	FY '24	FY '25	FY '26	FY '27	Total
5410.531: REPAIRS / MAINT STORM SWR LIFT STATION		50,000				50,000
Total		**50,000**				**50,000**

City Capital Plan Equipment Replacment

FY '23 *thru* FY '27

City of Marshalltown, Iowa

Department STORM SEWER LIFT STATI
Contact

Project # RIV 5900 001
Project Name SEAL, CAULK, & PAINT ROOF

Type Maintenance
Useful Life 10 years
Category 510531 STRM SEWER UTLT
Priority Critical
Status Active
Total Project Cost: $4,000

Division STORM WATER
Object 5410.531 REPAIRS/MAINT ST
Location 2005900

Description

painted in 1995 for $2000. PAINT OUTSIDE WALLS, ROOF (INSIDE AND OUT)

Justification

Expenditures	FY '23	FY '24	FY '25	FY '26	FY '27	Total
Maintenance	4,000					4,000
Total	**4,000**					**4,000**

Funding Sources	FY '23	FY '24	FY '25	FY '26	FY '27	Total
740/741 - STORM WATER	4,000					4,000
Total	**4,000**					**4,000**

Budget Impact/Other

Budget Items	FY '23	FY '24	FY '25	FY '26	FY '27	Total
5410.531: REPAIRS / MAINT STORM SWR LIFT STATION	4,000					4,000
Total	**4,000**					**4,000**

City Capital Plan Equipment Replacment

FY '23 *thru* FY '27

City of Marshalltown, Iowa

Department STORM SEWER LIFT STATI
Contact

Project # RIV 5900 007
Project Name PUMP #2 REBUILD MOTOR

Type Maintenance
Useful Life 10 years
Category 510531 STRM SEWER UTLT
Priority Critical
Status Active
Total Project Cost: $10,000

Division STORM WATER
Object
Location 2005900

Description

REBUILT IN 1994.

Justification

Expenditures	FY '23	FY '24	FY '25	FY '26	FY '27	Total
Maintenance	10,000					10,000
Total	**10,000**					**10,000**

Funding Sources	FY '23	FY '24	FY '25	FY '26	FY '27	Total
740/741 - STORM WATER	10,000					10,000
Total	**10,000**					**10,000**

Budget Impact/Other

Budget Items	FY '23	FY '24	FY '25	FY '26	FY '27	Total
5410.531: REPAIRS / MAINT STORM SWR LIFT STATION	10,000					10,000
Total	**10,000**					**10,000**

City Capital Plan Equipment Replacment

FY '23 *thru* FY '27

City of Marshalltown, Iowa

Department STORM SEWER LIFT STATI
Contact

Project # RIV 5900 033
Project Name STANDBY GENSET REBUILD

Type Equipment
Useful Life 10 years
Category 510531 STRM SEWER UTLT
Priority Critical
Status Active
Total Project Cost: $10,000

Division STORM WATER
Object 5765.000 LIFT STATIONS >5,0
Location 2005000

Description

GENERATOR AND TRANSFER SWITCH TAKEN FROM PRELIM BLDG AND INSTALLED MARCH 2013

Justification

Expenditures	FY '23	FY '24	FY '25	FY '26	FY '27	Total
Equip/Vehicles/Furnishings				10,000		10,000
Total				**10,000**		**10,000**

Funding Sources	FY '23	FY '24	FY '25	FY '26	FY '27	Total
740/741 - STORM WATER				10,000		10,000
Total				**10,000**		**10,000**

Budget Impact/Other

Budget Items	FY '23	FY '24	FY '25	FY '26	FY '27	Total
5765.000: LIFT STATIONS =>5,000				10,000		10,000
Total				**10,000**		**10,000**

City Capital Plan Equipment Replacment

FY '23 *thru* FY '27

City of Marshalltown, Iowa

Department STORM SEWER LIFT STATI
Contact

Project # SWR 5000 012
Project Name REPLACE 250KW GENERATOR-SEWER

Type Equipment
Useful Life 30 years
Category 510531 STRM SEWER UTLT
Priority Critical
Status Active
Total Project Cost: $100,000

Division STORM WATER
Object 5765.000 LIFT STATIONS >5,0
Location 2005000

Description

PORTABLE GENERATOR USED TO POWER RIVERVIEW PARK LIFT STATION PURCHASED IN 1988 FOR $20,000. THIS UNIT HAS BEEN REPLACED WITH THE OLD PRELIM GENSET AND TRANSFER SWITCH INSTALLED 9-14 AS A FIXED UNIT

Justification

Expenditures	FY '23	FY '24	FY '25	FY '26	FY '27	Total
Equip/Vehicles/Furnishings					100,000	100,000
Total					**100,000**	**100,000**

Funding Sources	FY '23	FY '24	FY '25	FY '26	FY '27	Total
740/741 - STORM WATER					100,000	100,000
Total					**100,000**	**100,000**

Budget Impact/Other

Budget Items	FY '23	FY '24	FY '25	FY '26	FY '27	Total
5765.000: LIFT STATIONS =>5,000					100,000	100,000
Total					**100,000**	**100,000**

City Capital Plan Equipment Replacment

FY '23 *thru* FY '27

City of Marshalltown, Iowa

Department STORM WATER - INFRAST
Contact Heather Thomas

Project # SMW17001
Project Name SMW17001 4th St/Meadow Ln. Storm Sewer

Type Improvement
Useful Life 50 years
Category 510531 STRM SEWER UTLT
Priority Critical
Status Active

Division STORM WATER
Object 5340.200 CONTRACT - OTHE
Location

Total Project Cost: **$3,297,961**

Description

New storm sewer along 4th St. from Meadow Ln. to High St.

Engineering paid for out of Fund 740 cash on hand.
Spent
FY19 - $3,540.97
FY20 - $179,271.70
FY21 - $12,205.92

Easement Payments / Permits
FY22 - $2,941.68

Construction
FY22 - $2,104,892.15
FY23 - Estimated $995,107.85 (allows for $104k conting)

Construction / Misc to be paid for out of Fund 363 - GO Bond 2021 (but managed in 741 so transfers needed.

Justification

Expenditures	FY '23	FY '24	FY '25	FY '26	FY '27	Total
Construction	995,108					995,108
Total	**995,108**					**995,108**

Funding Sources	FY '23	FY '24	FY '25	FY '26	FY '27	Total
740/741 - STORM WATER	995,108					995,108
Total	**995,108**					**995,108**

Budget Impact/Other

City Capital Plan Equipment Replacment

FY '23 *thru* FY '27

City of Marshalltown, Iowa

Department STORM WATER - INFRAST
Contact Heather Thomas

Project # STM SOS
Project Name STORM WATER EMERGENCY REPAIRS

Type Maintenance
Useful Life
Category 510531 STRM SEWER UTLT

Division STORM WATER
Object 5777.000 STORM SEWERS
Priority Not Applicable
Location 2005600
Status Active
Total Project Cost: **$812,670**

Description

REPAIR OF STORM SEWERS THAT NEED WORK AND CAN'T WAIT TILL ITS SCHEDULE.

FY22 - $92,670 spent covering two projects that required emergency repair due to failures under public streets.

Justification

Expenditures	FY '23	FY '24	FY '25	FY '26	FY '27	Total
Maintenance	50,000	50,000	50,000	50,000	50,000	250,000
Total	**50,000**	**50,000**	**50,000**	**50,000**	**50,000**	**250,000**

Funding Sources	FY '23	FY '24	FY '25	FY '26	FY '27	Total
740/741 - STORM WATER	50,000	50,000	50,000	50,000	50,000	250,000
Total	**50,000**	**50,000**	**50,000**	**50,000**	**50,000**	**250,000**

Budget Impact/Other

City Capital Plan Equipment Replacment

FY '23 *thru* FY '27

City of Marshalltown, Iowa

Department STORM WATER - INFRAST
Contact Heather Thomas

Project # STM_A
Project Name State St Storm Outlet - N 3rd St to N 4th St

Type Improvement
Useful Life 50 years
Category 510531 STRM SEWER UTLT

Division STORM WATER
Object
Location

Priority Very Important
Status Active
Total Project Cost: **$710,000**

Description

The State Street Reconstruction project from 3rd Ave to 3rd St is installing storm sewer. The engineers did not budget or plan to outlet the new storm sewer outside of that 6 blocks of reconstruction. The new storm sewer is larger diameter and at a lower elevation than what it is connecting to. This will cause the storm sewer to fill with debris and be unable to stay clean. Its operation will be based on outletting only under surcharged conditions.

This project would extend storm sewer to replace existing storm sewer so that the elevation of the new storm sewer would match up with existing storm sewer infrastructure. While the size of the new storm sewer will be larger, this project will at least line up the flow-lines of the storm sewer to prevent the debris build up and constant maintenance need that would be required if left unchecked.

Conceptual Cost Estimate prepared by City Engineering 08/2022 - $475,187.60

Budget 6% / Yr Inflation (x3 Years) & 20% contingency = $655,000
Design Engineering est @ 8% or $55,000
City would cover Construction Engineering with in-house staff

Justification

Expenditures	FY '23	FY '24	FY '25	FY '26	FY '27	Total
Planning & Design Engineering		55,000				55,000
Construction		655,000				655,000
Total		**710,000**				**710,000**

Funding Sources	FY '23	FY '24	FY '25	FY '26	FY '27	Total
353 - CAPITAL PROJECTS		710,000				710,000
Total		**710,000**				**710,000**

Budget Impact/Other

City Capital Plan Equipment Replacment

FY '23 *thru* FY '27

City of Marshalltown, Iowa

Department STORM WATER - INFRAST
Contact Heather Thomas

Project # STM_B
Project Name State St Storm Outlet - N 1st Ave to Lincoln St

Type Improvement
Useful Life 50 years
Category 510531 STRM SEWER UTLT

Division STORM WATER
Object
Priority Very Important
Location
Status Active
Total Project Cost: **$1,625,000**

Description

The State Street Reconstruction project from 3rd Ave to 3rd St is installing storm sewer. The engineers did not budget or plan to outlet the new storm sewer outside of that 6 blocks of reconstruction. The new storm sewer is larger diameter and at a lower elevation than what it is connecting to. This will cause the storm sewer to fill with debris and be unable to stay clean. It's operation will be based on outletting only under surcharged conditions.

This project would extend storm sewer to replace existing storm sewer so that the elevation of the new storm sewer would match up with existing storm sewer infrastructure. While the size of the new storm sewer will be larger, this project will at least line up the flow-lines of the storm sewer to prevent the debris build up and constant maintenance need that would be required if left unchecked.

Conceptual Cost Estimate prepared by City Engineering 08/2022 - $1,044,235.50

Budget 6% / Yr Inflation (x4 Years) & 20% contingency = $1,505,000 -> FY26
Design Engineering est @ 8% or $120,000 –> FY25
City would cover Construction Engineering with in-house staff

Justification

Expenditures	FY '23	FY '24	FY '25	FY '26	FY '27	Total
Planning & Design Engineering			120,000			120,000
Construction			1,505,000			1,505,000
Total			**1,625,000**			**1,625,000**

Funding Sources	FY '23	FY '24	FY '25	FY '26	FY '27	Total
353 - CAPITAL PROJECTS			1,625,000			1,625,000
Total			**1,625,000**			**1,625,000**

Budget Impact/Other

City Capital Plan Equipment Replacment

FY '23 *thru* FY '27

City of Marshalltown, Iowa

Department STREET DIVISION
Contact Heather Thomas

Project # E3510
Project Name Dump Truck

Type Equipment
Useful Life 10 years
Category 1102010 RUT-STR MAINTEN

Division STREET
Object 5749.000 OTHER CAPITAL EQ
Priority Critical
Location STREET GARAGE
Status Active
Total Project Cost: **$3,060,648**

Description

Replacement unit for existing dump truck w/ snow plow and sander equipped.

Existing trucks that were to be replaced in FY23 are both 2005 Internationals. These were ordered 07/12/21 (Resolution 2021-182) for $174,594 (w/ pre-wet) and for $170,994 (w/o pre-wet). Build dates continue to be pushed back and we are currently looking at a Sept 23 build date; therefore, this has been pushed back to FY24. Assume $4,500 trade/sale for each of existing ones.

Existing trucks that were to be replaced in FY24 are a 2009 and 2011 International. These were ordered 12/14/21 (Resolution 2022-345) for $206,415 (w/ pre-wet) with an estimated but unknown engine emission surcharge of $6,000 and for $201,865 (w/o pre-wet) with an estimated but unknown engine emission surcharge of $6,000. Build dates continue to be pushed back and are unknown - they have estimated late 2024; therefore, this has been pushed back to FY25. Assume $7,500 trade/sale for each of existing ones.

Due to supply chain, we have pushed back/combined some of the orders that were planned for FY25-FY27

Existing trucks to be replaced in FY 26 are a 2012 and 2013 International.
Existing trucks to be replaced in FY 27 are a 2014, 2015, and 2016 International. We plan to only replace with 2 dump trucks as a result of adding a brine trailer to our fleet so it can eliminate the need for a dump truck.
Existing trucks to be replaced in FY 28 are two 2018 Internationals.

Note - The RDS (more expensive dump) truck is a 2021.

Justification

Street Department desires a 7-8 year rotation. If we maintain replacement of 2 trucks/year - we will get to a 10 year life in FY26. However, recent supply chain issues with a 27 month lead time might delay the planned 10-year cycle.

Expenditures	FY '23	FY '24	FY '25	FY '26	FY '27	Total
Equip/Vehicles/Furnishings		336,588	405,280	426,300	447,615	1,615,783
Total		**336,588**	**405,280**	**426,300**	**447,615**	**1,615,783**

Funding Sources	FY '23	FY '24	FY '25	FY '26	FY '27	Total
110 - ROAD USE TAX $		220,588	405,280	426,300	447,615	1,499,783
145- TORNADO DISASTER FUND		116,000				116,000
Total		**336,588**	**405,280**	**426,300**	**447,615**	**1,615,783**

Budget Impact/Other

Based on council approvals, the dump trucks ordered in December 2022 that were to be paid 289,280 RUT and 116,000 Fund 145. To utilize the Fund 145 sooner, we will swap and apply the 116,000 to the dump trucks ordered in July 2021 expencted to arrive in FY24. - Change authorized by JK in Dec 2022 budget discussions.

City Capital Plan Equipment Replacment

FY '23 *thru* FY '27

City of Marshalltown, Iowa

Department STREET DIVISION
Contact Heather Thomas

Project # E3520
Project Name Street Sweeper

Type Equipment
Useful Life 8 years
Category 1102010 RUT-STR MAINTEN

Division STREET
Object
Priority Critical
Location STREET GARAGE
Status Active
Total Project Cost: **$854,280**

Description

STREET SWEEPER FLEET REPLACEMENT

Currently we have 3 street sweepers; we are planning to go down to 2. We have:
2011 Elgin Pelican Sweeper (Asset #6803)
2015 Global 3000 Sweeper (Asset #7008)
2019 Elgin Pelican Sweeper (Asset #7149)

12/09/22 Quote for Elgin Pelican $293,132
Allow $10k for each trade/sale.

Replacement Plan:
FY25 - 1 New, Trade/Sell the 2011 & 2015
FY28 - 1 new, Trade/Sell the 2019

Justification

Expenditures	FY '23	FY '24	FY '25	FY '26	FY '27	Total
Equip/Vehicles/Furnishings			300,000			300,000
Total			**300,000**			**300,000**

Funding Sources	FY '23	FY '24	FY '25	FY '26	FY '27	Total
110 - ROAD USE TAX $			300,000			300,000
Total			**300,000**			**300,000**

Budget Impact/Other

City Capital Plan Equipment Replacment

FY '23 *thru* FY '27

City of Marshalltown, Iowa

Department STREET DIVISION
Contact Heather Thomas

Project # E3550
Project Name Self Propelled Paint Striper

Type Equipment
Useful Life 15 years
Category 1102010 RUT-STR MAINTEN

Division STREET
Object 5749.000 OTHER CAPITAL EQ
Priority Critical
Location STREET GARAGE
Status Active
Total Project Cost: $245,500

Description

Replace pull behind striper - a Graco 1996 Model 231-378 Series H Road Lazer, 3 pump 2 color system

Purchased Maxi-110A Dum Striper Assembly through M-B

Justification

Expenditures	FY '23	FY '24	FY '25	FY '26	FY '27	Total
Equip/Vehicles/Furnishings	245,500					245,500
Total	**245,500**					**245,500**

Funding Sources	FY '23	FY '24	FY '25	FY '26	FY '27	Total
110 - ROAD USE TAX $	245,500					245,500
Total	**245,500**					**245,500**

Budget Impact/Other

City Capital Plan Equipment Replacment

FY '23 *thru* FY '27

City of Marshalltown, Iowa

Department STREET DIVISION
Contact Heather Thomas

Project # E3900
Project Name Snow Blower

Type Equipment
Useful Life 20 years
Category 1102010 RUT-STR MAINTEN

Division STREET
Object 5749.000 OTHER CAPITAL EQ
Priority Important
Location STREET GARAGE
Status Active
Total Project Cost: **$250,000**

Description

Snow Blower Fleet Maintenance (for front of wheel loader - used to remove snow piles and clear downtown streets/parking lots). We have 2
1996 Snowgo WK800 Snow Blower (Asset 3828)
2011 Snowgo MP-3D Snow Blower (Asset 6802)

Planned upcoming replacements:
FY26 - 1 New - Trade/Sell the 1996

12/09/22 Budget Estimate for Larue D50 Snowblower from MacQueen - $220,494 (in HAT folder)

Justification

Expenditures	FY '23	FY '24	FY '25	FY '26	FY '27	Total
Equip/Vehicles/Furnishings				250,000		250,000
Total				**250,000**		**250,000**

Funding Sources	FY '23	FY '24	FY '25	FY '26	FY '27	Total
110 - ROAD USE TAX $				250,000		250,000
Total				**250,000**		**250,000**

Budget Impact/Other

City Capital Plan Equipment Replacment

FY '23 *thru* FY '27

City of Marshalltown, Iowa

Department STREET DIVISION
Contact Heather Thomas

Project # E3940
Project Name Slide in oil distributor

Type Equipment
Useful Life 10 years
Category 1102010 RUT-STR MAINTEN

Division STREET
Object 5749.000 OTHER CAPITAL EQ
Priority Important
Location STREET GARAGE
Status Active
Total Project Cost: **$75,000**

Description

Used in alley maintainance and some minor street repair

Justification

Expenditures	FY '23	FY '24	FY '25	FY '26	FY '27	Total
Equip/Vehicles/Furnishings			75,000			75,000
Total			**75,000**			**75,000**

Funding Sources	FY '23	FY '24	FY '25	FY '26	FY '27	Total
110 - ROAD USE TAX $			75,000			75,000
Total			**75,000**			**75,000**

Budget Impact/Other

City Capital Plan Equipment Replacment

FY '23 *thru* FY '27

City of Marshalltown, Iowa

Department STREET DIVISION
Contact Heather Thomas

Project # E3941
Project Name Ride-On Painter

Type Equipment
Useful Life 10 years
Category 1102010 RUT-STR MAINTEN

Division STREET
Object
Location

Priority Important
Status Active
Total Project Cost: $35,000

Description

Street division desires to replace existing 2005 Graco Line Lazer Driver.

This machiene is used to paint parking lot lines, crosswalks, and parallel street parking stalls.

2005 would be surplused and sold.

Justification

Expenditures	FY '23	FY '24	FY '25	FY '26	FY '27	Total
Equip/Vehicles/Furnishings			35,000			35,000
Total			**35,000**			**35,000**

Funding Sources	FY '23	FY '24	FY '25	FY '26	FY '27	Total
110 - ROAD USE TAX $			35,000			35,000
Total			**35,000**			**35,000**

Budget Impact/Other

City Capital Plan Equipment Replacment

FY '23 *thru* FY '27

City of Marshalltown, Iowa

Department STREET DIVISION
Contact Heather Thomas

Project # E3942
Project Name Dual A/C Machine - City Mechanic Equipment

Type Equipment
Useful Life 15 years
Category 1102010 RUT-STR MAINTEN

Division STREET
Object
Priority Important
Location
Status Active
Total Project Cost: **$18,000**

Description

Starting in 2021 on, the A/C in vehicles will require a different reclaimer machiene for freon and our current 2007 Rand unit will not be able to be used on the newer vehicles/equipment.

Currenlty, the most vehicles that this equipment has been needed are the police vehicles. We anticipate more and more of the newer vehicles - in other departments will also need this. Based on past needs, we anticipate our mechanic sees 3 to 4 city vehicles a year that would need this machine. Outsourcing this requires a $175 diagnostic and a vac/charge of $110/hr. If coil change is needed, that is almost 10 hours of work. The street mechanic estimates this equipment will have a 4 year pay back for the city.

We are looking at a PolarTek Dual A/C Reclaimer Machine, or similar. July 2022 cost of $16,052; budget $18,000.

While heavier on PD vehicles now, we anticipate over the course of the equipment the following split from the departments/divisions that will get the most use:
55% streets
25% pd
20% parks

PD/Parks to be paid from Fund 030

Justification

Expenditures	FY '23	FY '24	FY '25	FY '26	FY '27	Total
Equip/Vehicles/Furnishings		18,000				18,000
Total		**18,000**				**18,000**

Funding Sources	FY '23	FY '24	FY '25	FY '26	FY '27	Total
030 - CIP FUND		8,100				8,100
110 - ROAD USE TAX $		9,900				9,900
Total		**18,000**				**18,000**

Budget Impact/Other

City Capital Plan Equipment Replacment

FY '23 *thru* FY '27

City of Marshalltown, Iowa

Department STREET DIVISION
Contact

Project # FY23New
Project Name Lasers for Equipment

Type Unassigned
Useful Life
Category 0011010 GEN'L-POLICE ADM
Priority Not Applicable
Status Active
Total Project Cost: $5,930

Division
Location
Object

Description

Laser kit purchased for a 2022 piece of equipment.

Justification

Expenditures	FY '23	FY '24	FY '25	FY '26	FY '27	Total
Equip/Vehicles/Furnishings	5,930					5,930
Total	**5,930**					**5,930**

Funding Sources	FY '23	FY '24	FY '25	FY '26	FY '27	Total
110 - ROAD USE TAX $	5,930					5,930
Total	**5,930**					**5,930**

Budget Impact/Other

City Capital Plan Equipment Replacment

FY '23 *thru* FY '27

City of Marshalltown, Iowa

Department STREET DIVISION
Contact Heather Thomas

Project # V2323
Project Name Wheel Loader

Type Equipment
Useful Life 12 years
Category 1102010 RUT-STR MAINTEN

Division STREET
Object 5749.000 OTHER CAPITAL EQ
Priority Critical
Location
Status Active
Total Project Cost: $392,907

Description

Replacement of Wheel Loader Fleet: We currently have four (one of which is out at airport):
2000 Caterpillar 938G Wheel Loader (Asset 5260)
2005 John Deere 544J Wheel Loader (Asset 6265)
2015 Case 721F Wheel Loader (Asset 7009)
2019 Case 721G Wheel Loader (Asset 7150)

FY23
Sold 2000, Replace with CAT926 (Approved 10/24/22; Resolution 2022-287)
Sold 2000 for $29,000; Purchased 2022 CAT926 for $202,906.46

FY25
Sell/Trade 2005, Replace with new
If airport changes snow removal equipment needs with their own equipment instead of borrowing street departments, we may be able to eliminate the FY25 purchase and just sell our 2005 without replacing.

Justification

Expenditures	FY '23	FY '24	FY '25	FY '26	FY '27	Total
Equip/Vehicles/Furnishings	202,907		190,000			392,907
Total	**202,907**		**190,000**			**392,907**

Funding Sources	FY '23	FY '24	FY '25	FY '26	FY '27	Total
110 - ROAD USE TAX $	202,907		83,136			286,043
145- TORNADO DISASTER FUND			106,864			106,864
Total	**202,907**		**190,000**			**392,907**

Budget Impact/Other

City Capital Plan Equipment Replacment

FY '23 *thru* FY '27

City of Marshalltown, Iowa

Department STREET DIVISION
Contact Heather Thomas

Project # V3500
Project Name Street Maintenance Fleet - 3/4 Ton Pickup

Type Equipment
Useful Life 10 years
Category 1102010 RUT-STR MAINTEN

Division STREET
Object
Priority Critical
Location STREET GARAGE
Status Active
Total Project Cost: **$36,150**

Description

Vehicle pushed back from FY22 to FY23 due to being unable to place order due to supply/chain.

3/4 Ton Crew cab for personell transport and snow removal duties.

Due to supply chain issues and being short on trucks within multiple departments/divisions - we are holding on to our 2003 Ext Cab Chevy Silverado with approx 150,000 miles for a while so it can be shared/used if needed. It will be surplused and sold/traded in the future when vehicle situation improves.

Ordered after 09/12/22 counctil approval (Resolution 2022-245) for $36,149.60.

Justification

Expenditures	FY '23	FY '24	FY '25	FY '26	FY '27	Total
Equip/Vehicles/Furnishings	36,150					36,150
Total	**36,150**					**36,150**

Funding Sources	FY '23	FY '24	FY '25	FY '26	FY '27	Total
110 - ROAD USE TAX $	36,150					36,150
Total	**36,150**					**36,150**

Budget Impact/Other

City Capital Plan Equipment Replacment

FY '23 *thru* FY '27

City of Marshalltown, Iowa

Department STREET DIVISION
Contact Heather Thomas

Project # V3502
Project Name Street Maintenance Fleet - 1 Ton Truck

Type Equipment
Useful Life 10 years
Category 1102010 RUT-STR MAINTEN

Division STREET
Object 5749.000 OTHER CAPITAL EQ
Priority Critical
Location STREET GARAGE
Status Active
Total Project Cost: **$60,000**

Description

Originally budgetted as a dump body but being reconsidered for a flat bed.

Authorized for purchase 09/12/22 (Resolution 2022-246). Purchase price $49,756.20. Flat bed / lighting modifications yet to be added. Budget $60,000 total.

At this time our existing flatbed truck is still needed to be kept for use with our pavement painting equipment until the new paint striper truck is in full operation sometime in 2023. At that time, street department will rotate a 1999 and 2006 truck around to pull our patch wagon and have one spare that will be evaluated and designated surplus, if appropriate, at that time.

Justification

Expenditures	FY '23	FY '24	FY '25	FY '26	FY '27	Total
Equip/Vehicles/Furnishings	60,000					60,000
Total	**60,000**					**60,000**

Funding Sources	FY '23	FY '24	FY '25	FY '26	FY '27	Total
110 - ROAD USE TAX $	60,000					60,000
Total	**60,000**					**60,000**

Budget Impact/Other

City Capital Plan Equipment Replacment

FY '23 *thru* FY '27

City of Marshalltown, Iowa

Department STREET DIVISION
Contact Heather Thomas

Project # V3507
Project Name Semi Tractor (Head Only_Used)

Type Equipment
Useful Life 10 years
Category 1102010 RUT-STR MAINTEN

Division STREET
Object
Priority Important
Location
Status Active
Total Project Cost: $80,000

Description

Used to haul around trackhoe. Want semi tractor head, will look at used ones.

Justification

Expenditures	FY '23	FY '24	FY '25	FY '26	FY '27	Total
Equip/Vehicles/Furnishings					80,000	80,000
Total					**80,000**	**80,000**

Funding Sources	FY '23	FY '24	FY '25	FY '26	FY '27	Total
110 - ROAD USE TAX $					80,000	80,000
Total					**80,000**	**80,000**

Budget Impact/Other

City Capital Plan Equipment Replacment

FY '23 *thru* FY '27

City of Marshalltown, Iowa

Department STREET DIVISION
Contact Heather Thomas

Project # V3508
Project Name Street Maintenance Fleet - 3/4 Ton Pickup

Type Equipment
Useful Life 8 years
Category 1102010 RUT-REVENUE AC

Division STREET
Object
Location

Priority Very Important
Status Active
Total Project Cost: $40,000

Description

3/4 Ton to originally replace 2004 Chevy 3/4 Ton. However, due to mechanical issues with an existing truck - will now surplus a different one.

Desired - 3/4 Ton, Standard Cab, 8' Box ($45,000 Estimate)

Vehicle to be surplused and traded/sold: 2003 Chevy 1500 Extended Cab ($5,000 Allowance)

Justification

Expenditures	FY '23	FY '24	FY '25	FY '26	FY '27	Total
Equip/Vehicles/Furnishings		40,000				40,000
Total		**40,000**				**40,000**

Funding Sources	FY '23	FY '24	FY '25	FY '26	FY '27	Total
110 - ROAD USE TAX $		40,000				40,000
Total		**40,000**				**40,000**

Budget Impact/Other

City Capital Plan Equipment Replacment

FY '23 *thru* FY '27

City of Marshalltown, Iowa

Department STREET DIVISION
Contact

Project # V3509
Project Name Street Maintenance Fleet - 1/2 Ton Pickup -Ext Cab

Type Equipment
Useful Life 8 years
Category 1102010 RUT-STR MAINTEN
Priority Important
Status Active
Total Project Cost: $35,000

Division STREET
Object
Location

Description

To replace 2003 Chevy 1500 Truck - Extended

Justification

Expenditures	FY '23	FY '24	FY '25	FY '26	FY '27	Total
Equip/Vehicles/Furnishings			35,000			35,000
Total			**35,000**			**35,000**

Funding Sources	FY '23	FY '24	FY '25	FY '26	FY '27	Total
110 - ROAD USE TAX $			35,000			35,000
Total			**35,000**			**35,000**

Budget Impact/Other

City Capital Plan Equipment Replacment

FY '23 *thru* FY '27

City of Marshalltown, Iowa

Department STREET DIVISION
Contact Heather Thomas

Project # V3510
Project Name UTV

Type Equipment
Useful Life 10 years
Category 1102010 RUT-STR MAINTEN

Division STREET
Object
Priority Important
Location
Status Active
Total Project Cost: $20,000

Description

Desire to get Polaris Ranger side by side. It is used for painting, weeds, spraying, etc.
Will surplus a 2012 John Deere Gator (Asset 7039)

Purchase Estimate - $25,000
Trade/Sale Value - $5,000

Justification

Expenditures	FY '23	FY '24	FY '25	FY '26	FY '27	Total
Equip/Vehicles/Furnishings		20,000				20,000
Total		**20,000**				**20,000**

Funding Sources	FY '23	FY '24	FY '25	FY '26	FY '27	Total
110 - ROAD USE TAX $		20,000				20,000
Total		**20,000**				**20,000**

Budget Impact/Other

City Capital Plan Equipment Replacment

FY '23 *thru* FY '27

City of Marshalltown, Iowa

Department STREET DIVISION
Contact Heather Thomas

Project # V3511
Project Name Trailer, Low Boy

Type Equipment
Useful Life 10 years
Category 1102010 RUT-STR MAINTEN

Division STREET
Object
Location

Priority Very Important
Status Active
Total Project Cost: $75,000

Description

Used for hauling excavator around. Want new trailer in FY27 to go on planned tractor head from FY27

Justification

Expenditures	FY '23	FY '24	FY '25	FY '26	FY '27	Total
Equip/Vehicles/Furnishings					75,000	75,000
Total					**75,000**	**75,000**

Funding Sources	FY '23	FY '24	FY '25	FY '26	FY '27	Total
110 - ROAD USE TAX $					75,000	75,000
Total					**75,000**	**75,000**

Budget Impact/Other

City Capital Plan Equipment Replacment

FY '23 *thru* FY '27

City of Marshalltown, Iowa

Department STREET DIVISION
Contact Heather Thomas

Project # V3512
Project Name Brine Trailer

Type Equipment
Useful Life 10 years
Category 1102050 RUT-SNOW REMOV

Division STREET
Object
Location

Priority Very Important
Status Active
Total Project Cost: **$50,000**

Description

Due to continued rising costs of dump trucks, street division staff would like to switch to a dedicated brine trailer that would be pulled behind any dump truck. Currently a dump truck is dedicated all winter as the brine dump truck and the box has a slide-in tank. Switching to a brine trailer will eliminate the need for 1 dump truck.

In 2021, they were about $43K. Budget $50K.

Desire to have brine trailer prior to winter 23/24.

Justification

Expenditures	FY '23	FY '24	FY '25	FY '26	FY '27	Total
Equip/Vehicles/Furnishings		50,000				50,000
Total		**50,000**				**50,000**

Funding Sources	FY '23	FY '24	FY '25	FY '26	FY '27	Total
110 - ROAD USE TAX $		50,000				50,000
Total		**50,000**				**50,000**

Budget Impact/Other

City Capital Plan Equipment Replacment

FY '23 *thru* FY '27

City of Marshalltown, Iowa

Department STREET DIVISION
Contact Heather Thomas

Project # V3513
Project Name Wheel Loader Grapple Bucket

Type Equipment
Useful Life 15 years
Category 1102010 RUT-STR MAINTEN

Division STREET
Object
Priority Important
Location
Status Active
Total Project Cost: $25,000

Description

Street division desires an additional grapple bucket attachment for our wheel loaders. City currently has to grapple buckets and four wheel loaders (of which one is at airport).

The grapple bucket attachment is what is used for trees/brush etc and they were used extensively in both the Tornade and Derecho. This would allow the city to operate all three wheel loaders if another event were to occur.

New cost is $25K. City considering modifying the bucket that is coming with our new wheel loader to turn it into a grapple bucket, if that is more cost effective and the equipment/bucket comes in as planned.

Justification

Expenditures	FY '23	FY '24	FY '25	FY '26	FY '27	Total
Equip/Vehicles/Furnishings		25,000				25,000
Total		**25,000**				**25,000**

Funding Sources	FY '23	FY '24	FY '25	FY '26	FY '27	Total
145- TORNADO DISASTER FUND		25,000				25,000
Total		**25,000**				**25,000**

Budget Impact/Other

City Capital Plan Equipment Replacment

FY '23 *thru* FY '27

City of Marshalltown, Iowa

Department STREET IMPROVEMENT P
Contact Heather Thomas

Project # SIP_A
Project Name Center St Median Curbs (In front of Hy-Vee)

Type Maintenance
Useful Life 15 years
Category 101750 GEN'L-STREET CON

Division STREET
Object
Priority Very Important
Location
Status Active
Total Project Cost: $40,250

Description

The median curbs on Center St (north of Anson St) are disinyigrated and chipping off into the traveled roadway. This is also causing issues with snow removal/storage in this are. Estimate about 500 LF of curbs, Budget $70/LF + 10% for mob, 5% for TC = $40,250

Justification

Part of swap of funds from 360 Bond Funds / 112 LOST Funds totaling $343,276 towards street improvements

Expenditures	FY '23	FY '24	FY '25	FY '26	FY '27	Total
Construction		40,250				40,250
Total		**40,250**				**40,250**

Funding Sources	FY '23	FY '24	FY '25	FY '26	FY '27	Total
121 - LOCAL OPTION SALES TAX		40,250				40,250
Total		**40,250**				**40,250**

Budget Impact/Other

City Capital Plan Equipment Replacment

FY '23 *thru* FY '27

City of Marshalltown, Iowa

Department STREET IMPROVEMENT P
Contact Heather Thomas

Project # SIP_C
Project Name SIP - State St / 14th St Box Culvert Overlay

Type Maintenance
Useful Life 15 years
Category 1102010 RUT-STR MAINTEN

Division PROJECTS
Object
Priority Important
Location
Status Active
Total Project Cost: **$110,000**

Description

Includes asphalt overlay of existing culvert, approach wedges to taper overlay back to existing and Channel Cleanout. Pavement maintenance needs surrounding and on top of the culvert on State Street just west of 14th Street.

Justification

Expenditures	FY '23	FY '24	FY '25	FY '26	FY '27	Total
Construction				110,000		110,000
Total				**110,000**		**110,000**

Funding Sources	FY '23	FY '24	FY '25	FY '26	FY '27	Total
353 - CAPITAL PROJECTS				110,000		110,000
Total				**110,000**		**110,000**

Budget Impact/Other

City Capital Plan Equipment Replacment

FY '23 *thru* FY '27

City of Marshalltown, Iowa

Department STREET IMPROVEMENT P
Contact Heather Thomas

Project # SIP_D
Project Name Lincoln Way Transition Concrete Patch

Type Maintenance
Useful Life 15 years
Category 1102010 RUT-STR MAINTEN

Division STREET
Object
Location

Priority Very Important
Status Active
Total Project Cost: $100,000

Description

Concrete Patch at Lincolnway Transition

Justification

Expenditures	FY '23	FY '24	FY '25	FY '26	FY '27	Total
Construction	100,000					100,000
Total	**100,000**					**100,000**

Funding Sources	FY '23	FY '24	FY '25	FY '26	FY '27	Total
121 - LOCAL OPTION SALES TAX	100,000					100,000
Total	**100,000**					**100,000**

Budget Impact/Other

Part of swap of funds from 360 Bond Funds / 112 LOST Funds totaling $343,276 towards street improvements

City Capital Plan Equipment Replacment

FY '23 *thru* FY '27

City of Marshalltown, Iowa

Department STREET IMPROVEMENT P
Contact Heather Thomas

Project # SIP_E
Project Name 18th Ave Patch

Type Maintenance
Useful Life 15 years
Category 1102010 RUT-STR MAINTEN

Division STREET
Object
Location

Priority Not Applicable
Status Active
Total Project Cost: **$75,000**

Description

Complaints on failed patches on 18th Ave. Larger patch needed is about 100' long x 1 lane width

Justification

Expenditures	FY '23	FY '24	FY '25	FY '26	FY '27	Total
Maintenance		75,000				75,000
Total		**75,000**				**75,000**

Funding Sources	FY '23	FY '24	FY '25	FY '26	FY '27	Total
121 - LOCAL OPTION SALES TAX		75,000				75,000
Total		**75,000**				**75,000**

Budget Impact/Other

Part of swap of funds from 360 Bond Funds / 112 LOST Funds totaling $343,276 towards street improvements

City Capital Plan Equipment Replacment

FY '23 *thru* FY '27

City of Marshalltown, Iowa

Department STREET IMPROVEMENT P
Contact Heather Thomas

Project # SIP_F
Project Name E Church St - E of 18th Ave

Type Improvement
Useful Life 10 years
Category 1102012 RUT-STREET CONS
Priority Very Important
Status Active
Total Project Cost: $100,000

Division STREET
Object
Location

Description

Review conversion to gravel.

St/Eng dept cored - paused once GO Bond Funding for streets was reduced

Core results were not great. Need to do cost comparison between asphalt overlay and gravel conversion

Justification

Expenditures	FY '23	FY '24	FY '25	FY '26	FY '27	Total
Construction		100,000				100,000
Total		**100,000**				**100,000**

Funding Sources	FY '23	FY '24	FY '25	FY '26	FY '27	Total
364- 2022 GO BOND		100,000				100,000
Total		**100,000**				**100,000**

Budget Impact/Other

City Capital Plan Equipment Replacment

FY '23 *thru* FY '27

City of Marshalltown, Iowa

Department STREET IMPROVEMENT P
Contact Heather Thomas

Project # SIP_X
Project Name Street Improvement Fund - PlaceHolder

Type Improvement
Useful Life 20 years
Category 1102012 RUT-STREET CONS

Division STREET
Object
Priority Critical
Location
Status Active
Total Project Cost: $14,001,536

Description

Street Improvement Program - Projects that don't have their own Plan It Line yet

Will include items like crack sealing, contingency on those projects shown, and additional projects not yet defined.

Justification

Expenditures	FY '23	FY '24	FY '25	FY '26	FY '27	Total
Construction		3,086,536	2,025,000	2,890,000	3,000,000	11,001,536
Total		**3,086,536**	**2,025,000**	**2,890,000**	**3,000,000**	**11,001,536**

Funding Sources	FY '23	FY '24	FY '25	FY '26	FY '27	Total
353 - CAPITAL PROJECTS		3,000,000	2,025,000	2,890,000	3,000,000	10,915,000
364- 2022 GO BOND		86,536				86,536
Total		**3,086,536**	**2,025,000**	**2,890,000**	**3,000,000**	**11,001,536**

Budget Impact/Other

City Capital Plan Equipment Replacment

FY '23 *thru* FY '27

City of Marshalltown, Iowa

Department STREET IMPROVEMENT P
Contact Heather Thomas

Project # SMW20003
Project Name 2020 Box Culvert Repairs

Type Maintenance
Useful Life 20 years
Category 510531 STRM SEWER UTLT

Division STREET
Object
Priority Very Important
Location
Status Active
Total Project Cost: $334,415

Description

project was to repair deteriorated box culverts and connecting street and sidewalk infrastructure at four locations:
Nevada St (Melcher Creek)
Marshall Drive (Melcher Creek)
E Boone (Melcher Creek)
N 16th St (Braddy Creek)

Justification

Expenditures	FY '23	FY '24	FY '25	FY '26	FY '27	Total
Construction	333,415					333,415
Maintenance	1,000					1,000
Total	**334,415**					**334,415**

Funding Sources	FY '23	FY '24	FY '25	FY '26	FY '27	Total
360 - 2019 GO BONDS	154,937					154,937
363- 2021 GO BOND	179,478					179,478
Total	**334,415**					**334,415**

Budget Impact/Other

City Capital Plan Equipment Replacment

FY '23 *thru* FY '27

City of Marshalltown, Iowa

Department STREET IMPROVEMENT P
Contact Heather Thomas

Project # SMW21002
Project Name SMW21002 Boone St Intrstns (15th Ave/16th Ave)

Type Improvement
Useful Life 30 years
Category 101750 GEN'L-STREET CON
Priority Very Important
Status Active
Total Project Cost: $174,289

Division
Location
Object

Description

Removal of underground storm sewer without an outlet. Installation of valley gutters / intersection improvements.

Design Completed In-House
Construction - $173,288.38 estimated
FY22 - $163,179.96
FY23 - $10,108.42

Justification

Expenditures	FY '23	FY '24	FY '25	FY '26	FY '27	Total
Construction	10,109					10,109
Total	**10,109**					**10,109**

Funding Sources	FY '23	FY '24	FY '25	FY '26	FY '27	Total
360 - 2019 GO BONDS	1,444					1,444
363- 2021 GO BOND	172,845					172,845
Total	**174,289**					**174,289**

Budget Impact/Other

City Capital Plan Equipment Replacment

FY '23 *thru* FY '27

City of Marshalltown, Iowa

Department STREET IMPROVEMENT P
Contact Heather Thomas

Project # STR20004
Project Name 18th Ave Viaduct

Type Maintenance
Useful Life 20 years
Category 1102010 RUT-STR MAINTEN

Division STREET
Object
Priority Not Applicable
Location
Status Active
Total Project Cost: $265,192

Description

Repairs to 18th Ave Viaduct, Bridge Approaches.

Engineering Completed In-House

Justification

Expenditures	FY '23	FY '24	FY '25	FY '26	FY '27	Total
Construction	265,192					265,192
Total	**265,192**					**265,192**

Funding Sources	FY '23	FY '24	FY '25	FY '26	FY '27	Total
360 - 2019 GO BONDS	246,090					246,090
363- 2021 GO BOND	19,102					19,102
Total	**265,192**					**265,192**

Budget Impact/Other

City Capital Plan Equipment Replacment

FY '23 *thru* FY '27

City of Marshalltown, Iowa

Department STREET IMPROVEMENT P
Contact Heather Thomas

Project # STR21001
Project Name Highland Acres Road Reconstruction

Type Improvement
Useful Life 30 years
Category 1102012 RUT-STREET CONS
Priority Important
Status Active
Total Project Cost: $4,875,000

Division STREET
Object
Location

Description

Reconstruction of Highland Acres Road from Lincoln Way to Main St

Applied for fed street dollar allocation. STBG Funds - DOT Award FY24

Cost Est $4.875 M
DOT SWAP Funds $3.9M
Local $975,000

Justification

Expenditures	FY '23	FY '24	FY '25	FY '26	FY '27	Total
Construction			4,875,000			4,875,000
Total			**4,875,000**			**4,875,000**

Funding Sources	FY '23	FY '24	FY '25	FY '26	FY '27	Total
311 - RISE STREET GRANTS			3,900,000			3,900,000
353 - CAPITAL PROJECTS			975,000			975,000
Total			**4,875,000**			**4,875,000**

Budget Impact/Other

City Capital Plan Equipment Replacment

FY '23 *thru* FY '27

City of Marshalltown, Iowa

Department STREET IMPROVEMENT P
Contact Heather Thomas

Project # **STR22001**
Project Name **E Main St Reconstruction (5th Ave to 12th Ave)**

Type Improvement
Useful Life 30 years
Category 1102010 RUT-STR MAINTEN
Priority Important
Status Active
Total Project Cost: **$3,870,000**

Division STREET
Object
Location

Description

Reconstruction of Main St from 5th Ave to 12th Ave

Engineering performed in-house

01/10/23 Estimate = $3,366,460
add 5 % undefined construction, permit fees, rr fees, etc.
Add 10% construction contingency
Total = $3,870,000

Justification

Expenditures	FY '23	FY '24	FY '25	FY '26	FY '27	Total
Construction	295,000	3,575,000				3,870,000
Total	**295,000**	**3,575,000**				**3,870,000**

Funding Sources	FY '23	FY '24	FY '25	FY '26	FY '27	Total
121 - LOCAL OPTION SALES TAX	128,026					128,026
363- 2021 GO BOND	166,974	1,111,536				1,278,510
364- 2022 GO BOND		2,463,464				2,463,464
Total	**295,000**	**3,575,000**				**3,870,000**

Budget Impact/Other

City Capital Plan Equipment Replacment

FY '23 *thru* FY '27

City of Marshalltown, Iowa

Department STREET IMPROVEMENT P
Contact Heather Thomas

Project # STR22501
Project Name FY23 Street Patch Repairs - Labor In House

Type Maintenance
Useful Life 15 years
Category 1102010 RUT-STR MAINTEN

Division STREET
Object
Priority Not Applicable
Location
Status Active
Total Project Cost: $75,000

Description

City street crews with help from Engineering and Sewer Dept to patch areas with full depth concrete in problem priority pothole areas.

Fall 22 Patches ($28,865.53)
9th St @ Summit
Summit @ 15th St

Spring 23 Patches Planned
Riverside / 3rd Ave

Considering
100 Block Glenda Drive (near mall parking lot entrance)
1010 W State St
4 S 5th Ave
E Main (near Lennox Overwalk)
18th Ave - Small Patch Failures

Justification

Expenditures	FY '23	FY '24	FY '25	FY '26	FY '27	Total
Construction	75,000					75,000
Total	**75,000**					**75,000**

Funding Sources	FY '23	FY '24	FY '25	FY '26	FY '27	Total
363- 2021 GO BOND	75,000					75,000
Total	**75,000**					**75,000**

Budget Impact/Other

Part of swap of funds from 360 Bond Funds / 112 LOST Funds totaling $343,276 towards street improvements

City Capital Plan Equipment Replacment

FY '23 *thru* FY '27

City of Marshalltown, Iowa

Department STREET IMPROVEMENT P
Contact Heather Thomas

Project # STR23501
Project Name FY24 Street Patch Repairs - Labor In House

Type Maintenance
Useful Life 15 years
Category 1102010 RUT-STR MAINTEN

Division STREET
Object
Priority Not Applicable
Location
Status Active
Total Project Cost: $100,000

Description

City street crews with help from Engineering and Sewer Dept to patch areas with full depth concrete in problem priority pothole areas.

Possibly Carryover from FY23
100 Block Glenda Drive (near mall parking lot entrance)
1010 W State St
4 S 5th Ave
E Main (near Lennox Overwalk)
18th Ave - Small Patch Failures

Intersection Rebuild near 1902 W State St

Justification

Expenditures	FY '23	FY '24	FY '25	FY '26	FY '27	Total
Construction		100,000				100,000
Total		**100,000**				**100,000**

Funding Sources	FY '23	FY '24	FY '25	FY '26	FY '27	Total
363- 2021 GO BOND		100,000				100,000
Total		**100,000**				**100,000**

Budget Impact/Other

City Capital Plan Equipment Replacment

FY '23 *thru* FY '27

City of Marshalltown, Iowa

Department TRANSIT DIVISION
Contact Heather Thomas

Project # **F1000**
Project Name **Transit Signs & Benches**

Type Improvement
Useful Life 5 years
Category 550780 TRANSIT-OPERATIN

Division TRANSIT
Object
Priority Important
Location
Status Active
Total Project Cost: **$20,000**

Description

Request additional benches and signs at bus stops.

12/2022 Update - pushed FY34 to FY24

Justification

Expenditures	FY '23	FY '24	FY '25	FY '26	FY '27	Total
Equip/Vehicles/Furnishings		10,000		10,000		20,000
Total		**10,000**		**10,000**		**20,000**

Funding Sources	FY '23	FY '24	FY '25	FY '26	FY '27	Total
690 - TRANSIT		10,000		10,000		20,000
Total		**10,000**		**10,000**		**20,000**

Budget Impact/Other

City Capital Plan Equipment Replacment

FY '23 *thru* FY '27

City of Marshalltown, Iowa

Department TRANSIT DIVISION
Contact Heather Thomas

Project # TRST_E_A
Project Name Bus Lift - Post System

Type Equipment
Useful Life 10 years
Category 550780 TRANSIT-OPERATIN

Division TRANSIT
Object
Location

Priority Important
Status Active
Total Project Cost: $60,000

Description

Used by our transit mechanic to work on our buses.

Justification

Expenditures	FY '23	FY '24	FY '25	FY '26	FY '27	Total
Equip/Vehicles/Furnishings			60,000			60,000
Total			**60,000**			**60,000**

Funding Sources	FY '23	FY '24	FY '25	FY '26	FY '27	Total
690 - TRANSIT			60,000			60,000
Total			**60,000**			**60,000**

Budget Impact/Other

City Capital Plan Equipment Replacment

FY '23 *thru* FY '27

City of Marshalltown, Iowa

Department TRANSIT DIVISION
Contact Heather Thomas

Project # TRST_T_A
Project Name Taptco Software and Training

Type Unassigned
Useful Life 10 years
Category 550780 TRANSIT-OPERATIN

Division TRANSIT
Object
Location

Priority Important
Status Active
Total Project Cost: $18,000

Description

The TAPTCO software package meeting the requirements for operator training under PTASP, FMCSA, and FTA. Much of the training surroungs safety.

With the new CDL requirements, this also has the training/non-driving testing aspects to provide training for new employees needing their CDL.

There are also scheduling aspects to the software that will be evaluated.

We are applying for a 100% grant for this software. If awarded we will proceed with the entire software package. If not - we will look at still purchasing the needed training portions for about $10k with 690 Funds

Justification

Expenditures	FY '23	FY '24	FY '25	FY '26	FY '27	Total
Maintenance		18,000				18,000
Total		**18,000**				**18,000**

Funding Sources	FY '23	FY '24	FY '25	FY '26	FY '27	Total
690 - TRANSIT		18,000				18,000
Total		**18,000**				**18,000**

Budget Impact/Other

$18,000 in 690 Funds would be a grant.

City Capital Plan Equipment Replacment

FY '23 *thru* FY '27

City of Marshalltown, Iowa

Department TRANSIT DIVISION
Contact Heather Thomas

Project # TRST_V_A
Project Name New Bus - Replace #011

Type Equipment
Useful Life 10 years
Category 550780 TRANSIT-OPERATIN

Division TRANSIT
Object
Location

Priority Critical
Status Active
Total Project Cost: **$647,300**

Description

Replace the 011 with a new bus. Our 109 is a 40' Gillig Phantom w/ Standard Floor Bus that the City obtained from CyRide in 2021.

Eligible for 85% federal funding (since 011 is a bus with positive points on the eligibility ranking)

FY23 Bus Costs for 40' - $543,480
Assume 6% Annual Increase, so FY26 = $647,300

Federal Cost - $ 550,205
Local Cost - $ 97,095

Justification

Expenditures	FY '23	FY '24	FY '25	FY '26	FY '27	Total
Equip/Vehicles/Furnishings				647,300		647,300
Total				**647,300**		**647,300**

Funding Sources	FY '23	FY '24	FY '25	FY '26	FY '27	Total
690 - TRANSIT				647,300		647,300
Total				**647,300**		**647,300**

Budget Impact/Other

550,205 in shown 690 Funds would be a federal grant

City Capital Plan Equipment Replacment

FY '23 *thru* FY '27

City of Marshalltown, Iowa

Department TRANSIT DIVISION
Contact Heather Thomas

Project # TRST_V_B
Project Name New Bus - Replace #013

Type Equipment
Useful Life 10 years
Category 550780 TRANSIT-OPERATIN

Division TRANSIT
Object
Location

Priority Important
Status Active
Total Project Cost: $647,300

Description

Replace the 011 with a new bus. Our 109 is a 40' Gillig Phantom w/ Standard Floor Bus that the City obtained from CyRide in 2021.

Eligible for 85% federal funding (since 013 is a bus with positive points on the eligibility ranking)

FY23 Bus Costs for 40' - $543,480
Assume 6% Annual Increase, so FY26 = $647,300

Federal Cost - $ 550,205
Local Cost - $ 97,095

Justification

Expenditures	FY '23	FY '24	FY '25	FY '26	FY '27	Total
Equip/Vehicles/Furnishings				647,300		647,300
Total				**647,300**		**647,300**

Funding Sources	FY '23	FY '24	FY '25	FY '26	FY '27	Total
690 - TRANSIT				647,300		647,300
Total				**647,300**		**647,300**

Budget Impact/Other

550,205 shown in 690 Funds are grant funds

City Capital Plan Equipment Replacment

FY '23 *thru* FY '27

City of Marshalltown, Iowa

Department TRANSIT DIVISION
Contact Heather Thomas

Project # TRST_V_C
Project Name Engine Replacement on 2010 Gillig

Type Equipment
Useful Life 7 years
Category 550780 TRANSIT-OPERATIN

Division TRANSIT
Object
Location

Priority Very Important
Status Active
Total Project Cost: **$65,000**

Description

ADDED Jan 2023 - The engine on our 2010 Gillig is burning significant oil. We are getting quotes to rebuild or replace engine. This is similar to our recent 2008 Gillig that we needed to do an engine replacement. We hope the engine replacement will allow us to get another 7 years +/- out of the bus.

Iowa DOT Guidance for these 30' busses utilize a 7 year federal replacement threshold. With it being 2023 at this time on a 2010 bus we have already almost doubled the replacement threshold. We anticpate with replacement/major rebuild - we will utilize this bus through 2030 +/-.

Justification

Expenditures	FY '23	FY '24	FY '25	FY '26	FY '27	Total
Equip/Vehicles/Furnishings	65,000					65,000
Total	**65,000**					**65,000**

Funding Sources	FY '23	FY '24	FY '25	FY '26	FY '27	Total
690 - TRANSIT	65,000					65,000
Total	**65,000**					**65,000**

Budget Impact/Other

City Capital Plan Equipment Replacment

FY '23 *thru* FY '27

City of Marshalltown, Iowa

Department TRANSIT DIVISION
Contact Heather Thomas

Project # V3410
Project Name New Bus - Replace #109

Type Equipment
Useful Life 10 years
Category 550780 TRANSIT-OPERATIN

Division TRANSIT
Object 5749.000 OTHER CAPITAL EQ
Priority Critical
Location
Status Active
Total Project Cost: **$539,000**

Description

Replace the 109 with a new bus. Our 109 is a 2010 Gillig 30' Low Floor Bus.
12/2022 Update - Bus prices increase 17% from a year ago…..(Changed from doing a like kind to replace this 30-ft with a 40-ft bus to replacing with a 30-ft (same size) - results in not having to provide additional $35,420 for the length increase - the next two buses we have to trade/swap are both 40-ft; we will use repurposed 40' Cy-Ride buses until we can get those buses replaced)

Eligible for 85% federal funding (since 109 is a bus with positive points on the eligibility ranking)

FY23 Bus Costs for 30' - $508,060
Assume 6% Annual Increase, so FY24 = 539,000

Federal Cost - $ 458,150
Local Cost - $ 80,850

Due to lead times, pushed payment back until FY25 as of 01/18/23.

Justification

Expenditures	FY '23	FY '24	FY '25	FY '26	FY '27	Total
Equip/Vehicles/Furnishings			539,000			539,000
Total			**539,000**			**539,000**

Funding Sources	FY '23	FY '24	FY '25	FY '26	FY '27	Total
690 - TRANSIT			539,000			539,000
Total			**539,000**			**539,000**

Budget Impact/Other

458,150 of 690 Funds are grant funds

City Capital Plan Equipment Replacment

FY '23 *thru* FY '27

City of Marshalltown, Iowa

Department TRANSIT DIVISION
Contact Heather Thomas

Project # V3419
Project Name Shop Truck- Used Transfer from P&R

Type Equipment
Useful Life 10 years
Category 550780 TRANSIT-OPERATIN

Division TRANSIT
Object
Location

Priority Important
Status Active
Total Project Cost: $6,000

Description

Park & Rec looking at trading in a 4WD truck w Tommy Gate, Transit is interested.

12/22 update - Pushed from FY22 to FY23 due to delay in P&R getting their vehicles. $10k place holder reduced to $6,500. Need Trade In Value from Park & Rec still.

Rcvd Trade In Value 01/13/23 - $6,000; Updated HAT 01/17/23

Justification

Expenditures	FY '23	FY '24	FY '25	FY '26	FY '27	Total
Equip/Vehicles/Furnishings	6,000					6,000
Total	**6,000**					**6,000**

Funding Sources	FY '23	FY '24	FY '25	FY '26	FY '27	Total
690 - TRANSIT	6,000					6,000
Total	**6,000**					**6,000**

Budget Impact/Other

City Capital Plan Equipment Replacment

FY '23 *thru* FY '27

City of Marshalltown, Iowa

Department TRANSIT DIVISION
Contact Heather Thomas

Project # V3420
Project Name Two Used Cy Ride Buses - Replace #991

Type Equipment
Useful Life 3 years
Category 550780 TRANSIT-OPERATIN

Division TRANSIT
Object
Location

Priority Very Important
Status Active
Total Project Cost: $5,000

Description

City can obtain old Cy-Ride buses for about $500 scrap price and $2,000 setup for $2,500 a piece that will last 2-3 years.

We desire to obtain 2 40' Cy-Ride buses, Immediately surplus the 991 (a 1999 Gillig Phantom purchased in 2017 from Cy-Ride). We would take out of regular service the 011 (a 40' Gillig Phantom with standard floor obtained from Cy-Ride in 2021) or the 013 (a 40' Gillig Phantom with standard floor obtained from Cy-Ride in 2021). We would not surplus these yet as they are what has the priority points high enough to be eligible for new bus trade in for the coming years.

Justification

Expenditures	FY '23	FY '24	FY '25	FY '26	FY '27	Total
Equip/Vehicles/Furnishings	5,000					5,000
Total	**5,000**					**5,000**

Funding Sources	FY '23	FY '24	FY '25	FY '26	FY '27	Total
690 - TRANSIT	5,000					5,000
Total	**5,000**					**5,000**

Budget Impact/Other

City Capital Plan Equipment Replacment

FY '23 *thru* FY '27

City of Marshalltown, Iowa

Department TRANSIT DIVISION
Contact Heather Thomas

Project # V3421
Project Name Two Used LightDuty Chauffer Buses

Type Equipment
Useful Life 3 years
Category 550780 TRANSIT-OPERATIN

Division TRANSIT
Object
Location

Priority Very Important
Status Active
Total Project Cost: $10,000

Description

ADDED DEC 2022 for FY23 (This year)

Staffing has been challenging. We are looking at opening the option up that we have a driver that only has a Chauffer's License (and not a full CDL) in hopes that we might be able to fill at least one of our existing vacancies and pending retirements. A Chauffer's License is easier and quicker to get but restricts the driver from driving a vehicle that has an occupancy less than 16. We currently do not have any bus that fits that requirement.

Through the Iowa DOT portal, there are 3 buses that currently fit that requirements and we are potentially looking at <$5k each (two of them are buses that Fort Dodge are retiring). To fund this potential endevour, we are postponing transit signage and benches as getting drivers is a higher priority.

We would need to purchase 2 so that we had a back-up if one was down with mechanical issues. We do not plan on purchasing until we have extended an offer to a potential driver that fits this option and they have accepted.

It is also our intent to use this new position as a starting point / training mechanism and recruitment tool. We would work with them, if they desired, to obtain a full CDL and be able to drive our larger buses.

Justification

Expenditures	FY '23	FY '24	FY '25	FY '26	FY '27	Total
Equip/Vehicles/Furnishings	10,000					10,000
Total	**10,000**					**10,000**

Funding Sources	FY '23	FY '24	FY '25	FY '26	FY '27	Total
690 - TRANSIT	10,000					10,000
Total	**10,000**					**10,000**

Budget Impact/Other

City Capital Plan Equipment Replacment

FY '23 *thru* FY '27

City of Marshalltown, Iowa

Department UTILITY (ELEC/FACIL) DIVI
Contact Heather Thomas

Project # E3701
Project Name Arc Flash Suit

Type Equipment
Useful Life 10 years
Category 1102040 RUT-TRAFFIC SAFE
Priority Critical
Status Active
Total Project Cost: $5,000

Division
Location
Object

Description

Justification

Expenditures	FY '23	FY '24	FY '25	FY '26	FY '27	Total
Equip/Vehicles/Furnishings			5,000			5,000
Total			**5,000**			**5,000**

Funding Sources	FY '23	FY '24	FY '25	FY '26	FY '27	Total
110 - ROAD USE TAX $			5,000			5,000
Total			**5,000**			**5,000**

Budget Impact/Other

Budget Items	FY '23	FY '24	FY '25	FY '26	FY '27	Total
5750.000: OTHER CAPITAL EQUIPMENT=>5,000			5,000			5,000
Total			**5,000**			**5,000**

City Capital Plan Equipment Replacment

FY '23 *thru* FY '27

City of Marshalltown, Iowa

Department UTILITY (ELEC/FACIL) DIVI
Contact Heather Thomas
Type Unassigned
Useful Life
Category 1102040 RUT-TRAFFIC SAFE
Priority Not Applicable
Status Active
Total Project Cost: **$21,000**

Project # **E3704**
Project Name **LED Traffic Light Replacement**

Division
Location
Object

Description

Replacement of traffic signal light bulbs with energy efficient LED bulbs

Justification

Energy savings

Expenditures	FY '23	FY '24	FY '25	FY '26	FY '27	Total
Equip/Vehicles/Furnishings				11,000		11,000
Total				**11,000**		**11,000**

Funding Sources	FY '23	FY '24	FY '25	FY '26	FY '27	Total
110 - ROAD USE TAX $				11,000		11,000
Total				**11,000**		**11,000**

Budget Impact/Other

Budget Items	FY '23	FY '24	FY '25	FY '26	FY '27	Total
5780.000: TRAFFIC SIGNALS				11,000		11,000
Total				**11,000**		**11,000**

City Capital Plan Equipment Replacment

FY '23 *thru* FY '27

City of Marshalltown, Iowa

Department UTILITY (ELEC/FACIL) DIVI
Contact Heather Thomas

Project # E3708
Project Name Traffic Signal Battery Back Ups

Type Improvement
Useful Life 10 years
Category 1102040 RUT-TRAFFIC SAFE

Division UTILITY
Object
Location

Priority Important
Status Active
Total Project Cost: $99,000

Description

Battery Back ups for major intersections to keep traffic signals operating during power outages instead of the need for manpower and placement of temporary stop signs.

Each are about $7k in 2022

Justification

Expenditures	FY '23	FY '24	FY '25	FY '26	FY '27	Total
Equip/Vehicles/Furnishings	14,000	15,000	16,000	17,000	18,000	80,000
Total	**14,000**	**15,000**	**16,000**	**17,000**	**18,000**	**80,000**

Funding Sources	FY '23	FY '24	FY '25	FY '26	FY '27	Total
110 - ROAD USE TAX $	14,000	15,000	16,000	17,000	18,000	80,000
Total	**14,000**	**15,000**	**16,000**	**17,000**	**18,000**	**80,000**

Budget Impact/Other

City Capital Plan Equipment Replacment

FY '23 *thru* FY '27

City of Marshalltown, Iowa

Department UTILITY (ELEC/FACIL) DIVI
Contact Heather Thomas

Project # E3709
Project Name Traffic Controllers (W IDOT Grant)

Type Improvement
Useful Life 15 years
Category 0012040 GEN'L-TRAFFIC SA

Division UTILITY
Object
Location

Priority Important
Status Active
Total Project Cost: **$60,000**

Description

Rcvd 60k Grant to replace M60 Traffic Controllers . Have 23 intersections. 2 Done, 21 to Go.

Also need to do battery backups.

HAT Quote from 02/2022 were $3,500 each on the M60s for material.

Justification

Expenditures	FY '23	FY '24	FY '25	FY '26	FY '27	Total
Equip/Vehicles/Furnishings	60,000					60,000
Total	**60,000**					**60,000**

Funding Sources	FY '23	FY '24	FY '25	FY '26	FY '27	Total
132 - MISC CAPITAL GRANTS	60,000					60,000
Total	**60,000**					**60,000**

Budget Impact/Other

City Capital Plan Equipment Replacment

FY '23 *thru* FY '27

City of Marshalltown, Iowa

Department UTILITY (ELEC/FACIL) DIVI
Contact Heather Thomas

Project # UTIL_A
Project Name Repeater at High Street Tower (for radio coms)

Type Equipment
Useful Life 10 years
Category 0012040 GEN'L-TRAFFIC SA

Division UTILITY
Object
Location

Priority Important
Status Active
Total Project Cost: **$10,000**

Description

The existing repeater @ High Street belonging to the City Public Works has been end of lifed by the manufacturer, we can continue to support it for approx. 3-5 years, but as time goes on parts will be harder and harder to come by. I would like to start talking about replacing/upgrading the repeater sooner rather than later given current supply/demand issues. (Unsure when this statement was first made and by who - HAT)

Talked to Dave D 12/2021, repeater seems to be working at High St (on water tower). Use for streets, sewer radio communications. - We recently replaced the Community Schools Transit repeater and the cost was just shy of $7000 and that equipment, a Tait TB9000 repeater (100w and DMR capable) is what Dave would suggest for replacing the Harris MASTR III that is current in use.

Justification

Expenditures	FY '23	FY '24	FY '25	FY '26	FY '27	Total
Equip/Vehicles/Furnishings					10,000	10,000
Total					**10,000**	**10,000**

Funding Sources	FY '23	FY '24	FY '25	FY '26	FY '27	Total
110 - ROAD USE TAX $					5,000	5,000
612 - WPCP REVENUE FUND					3,000	3,000
740/741 - STORM WATER					2,000	2,000
Total					**10,000**	**10,000**

Budget Impact/Other

City Capital Plan Equipment Replacment

FY '23 *thru* FY '27

City of Marshalltown, Iowa

Department WPCP DIVISION
Contact

Project # ADM 0300 001
Project Name REPLACE FLOORING (DOWN)-ADMINISTRATION BLDG

Type Maintenance
Useful Life 20 years
Category 520520 WPCP EXP-TREATM
Priority Critical
Status Active
Total Project Cost: $9,000

Division WPC-PLANT
Object 5410.000 REPAIRS/MAINT
Location 1900300

Description

New tile 2009.

Justification

Expenditures	FY '23	FY '24	FY '25	FY '26	FY '27	Total
Maintenance	9,000					9,000
Total	**9,000**					**9,000**

Funding Sources	FY '23	FY '24	FY '25	FY '26	FY '27	Total
612 - WPCP REVENUE FUND	9,000					9,000
Total	**9,000**					**9,000**

Budget Impact/Other

Budget Items	FY '23	FY '24	FY '25	FY '26	FY '27	Total
5410.000: REPAIRS / MAINTENANCE	9,000					9,000
Total	**9,000**					**9,000**

City Capital Plan Equipment Replacment

FY '23 *thru* FY '27

City of Marshalltown, Iowa

Department WPCP DIVISION
Contact

Project # ARB 0500 002
Project Name AERATION BASIN MEMBRANES

Type Equipment
Useful Life 10 years
Category 520520 WPCP EXP-TREATM

Division WPC-PLANT
Object 5749.000 OTHER CAPITAL EQ
Priority Critical
Location 1900500
Status Active
Total Project Cost: **$25,000**

Description

Aeration Basin Membranes - Basins 1-2-3

Justification

Expenditures	FY '23	FY '24	FY '25	FY '26	FY '27	Total
Equip/Vehicles/Furnishings	25,000					25,000
Total	**25,000**					**25,000**

Funding Sources	FY '23	FY '24	FY '25	FY '26	FY '27	Total
612 - WPCP REVENUE FUND	25,000					25,000
Total	**25,000**					**25,000**

Budget Impact/Other

Budget Items	FY '23	FY '24	FY '25	FY '26	FY '27	Total
5750.000: OTHER CAPITAL EQUIPMENT=>5,000	25,000					25,000
Total	**25,000**					**25,000**

City Capital Plan Equipment Replacment

FY '23 *thru* FY '27

City of Marshalltown, Iowa

Department WPCP DIVISION
Contact

Project # BFP 0900 002
Project Name OVERHEAD DOOR -MAINTENANCE SHOP

Type Maintenance
Useful Life 20 years
Category 520520 WPCP EXP-TREATM
Priority Important
Status Active
Total Project Cost: $2,800

Division WPC-PLANT
Object 5410.000 REPAIRS/MAINT
Location 1900900

Description

COST: $6000 PURCHASE DATE: 1/1/1987

Justification

Expenditures	FY '23	FY '24	FY '25	FY '26	FY '27	Total
Maintenance					2,800	2,800
Total					**2,800**	**2,800**

Funding Sources	FY '23	FY '24	FY '25	FY '26	FY '27	Total
612 - WPCP REVENUE FUND					2,800	2,800
Total					**2,800**	**2,800**

Budget Impact/Other

Budget Items	FY '23	FY '24	FY '25	FY '26	FY '27	Total
5410.000: REPAIRS / MAINTENANCE					2,800	2,800
Total					**2,800**	**2,800**

City Capital Plan Equipment Replacment

FY '23 *thru* FY '27

City of Marshalltown, Iowa

Department WPCP DIVISION
Contact

Project # BGR 0700 001
Project Name TEST GAS BALL

Type Maintenance
Useful Life 20 years
Category 520520 WPCP EXP-TREATM

Division WPC-PLANT
Object 5776.000 BUILDINGS & IMPR
Priority Critical
Location 1900700
Status Active
Total Project Cost: **$15,000**

Description

COST: $13000 , LAST TESTED 1997.

Justification

Expenditures	FY '23	FY '24	FY '25	FY '26	FY '27	Total
Maintenance				15,000		15,000
Total				**15,000**		**15,000**

Funding Sources	FY '23	FY '24	FY '25	FY '26	FY '27	Total
612 - WPCP REVENUE FUND				15,000		15,000
Total				**15,000**		**15,000**

Budget Impact/Other

Budget Items	FY '23	FY '24	FY '25	FY '26	FY '27	Total
5776.000: BUILDINGS & IMPROVEMENTS=>5,000				15,000		15,000
Total				**15,000**		**15,000**

City Capital Plan Equipment Replacment

FY '23 *thru* FY '27

City of Marshalltown, Iowa

Department WPCP DIVISION
Contact

Project # BLR 1200 001
Project Name BOILER #1-BOILER BLDG

Type Equipment
Useful Life 20 years
Category 520520 WPCP EXP-TREATM
Priority Critical
Status Active
Total Project Cost: $60,000

Division WPC-PLANT
Object 5749.000 OTHER CAPITAL EQ
Location 1901200

Description

PURCHASED IN 2001 AT A COST OF $40,000.

Justification

Expenditures	FY '23	FY '24	FY '25	FY '26	FY '27	Total
Equip/Vehicles/Furnishings					60,000	60,000
Total					**60,000**	**60,000**

Funding Sources	FY '23	FY '24	FY '25	FY '26	FY '27	Total
612 - WPCP REVENUE FUND					60,000	60,000
Total					**60,000**	**60,000**

Budget Impact/Other

Budget Items	FY '23	FY '24	FY '25	FY '26	FY '27	Total
5750.000: OTHER CAPITAL EQUIPMENT=>5,000					60,000	60,000
Total					**60,000**	**60,000**

City Capital Plan Equipment Replacment

FY '23 *thru* FY '27

City of Marshalltown, Iowa

Department WPCP DIVISION
Contact

Project # BLR 1200 003
Project Name MEMBRANE ROOF REPLACEMENT-BOILER BLDG

Type Maintenance
Useful Life 15 years
Category 520520 WPCP EXP-TREATM
Priority Critical
Status Active
Total Project Cost: $15,000

Division WPC-PLANT
Object 5776.000 BUILDINGS & IMPR
Location 1901200

Description

COST: $10900 IN SEPT. OF 2004.

Justification

Expenditures	FY '23	FY '24	FY '25	FY '26	FY '27	Total
Maintenance		15,000				15,000
Total		**15,000**				**15,000**

Funding Sources	FY '23	FY '24	FY '25	FY '26	FY '27	Total
612 - WPCP REVENUE FUND		15,000				15,000
Total		**15,000**				**15,000**

Budget Impact/Other

Budget Items	FY '23	FY '24	FY '25	FY '26	FY '27	Total
5776.000: BUILDINGS & IMPROVEMENTS=>5,000		15,000				15,000
Total		**15,000**				**15,000**

City Capital Plan Equipment Replacment

FY '23 *thru* FY '27

City of Marshalltown, Iowa

Department WPCP DIVISION
Contact

Project # BLR 1200 010
Project Name HWP #1 REPLACEMENT-BOILER BLDG

Type Equipment
Useful Life 20 years
Category 520520 WPCP EXP-TREATM

Division WPC-PLANT
Object 5749.000 OTHER CAPITAL EQ
Priority Critical
Location 1901200
Status Active
Total Project Cost: **$15,000**

Description

PURCHASE SEPT. OF 2004 FOR $15,000.

Justification

Expenditures	FY '23	FY '24	FY '25	FY '26	FY '27	Total
Equip/Vehicles/Furnishings				15,000		15,000
Total				**15,000**		**15,000**

Funding Sources	FY '23	FY '24	FY '25	FY '26	FY '27	Total
612 - WPCP REVENUE FUND				15,000		15,000
Total				**15,000**		**15,000**

Budget Impact/Other

Budget Items	FY '23	FY '24	FY '25	FY '26	FY '27	Total
5750.000: OTHER CAPITAL EQUIPMENT=>5,000				15,000		15,000
Total				**15,000**		**15,000**

City Capital Plan Equipment Replacment

FY '23 *thru* FY '27

City of Marshalltown, Iowa

Department WPCP DIVISION
Contact

Project # BLR 1200 012
Project Name HWP #2 REPLACEMENT - BOILER BLDG

Type Equipment
Useful Life 20 years
Category 520520 WPCP EXP-TREATM
Priority Critical
Status Active
Total Project Cost: $15,000

Division WPC-PLANT
Object 5749.000 OTHER CAPITAL EQ
Location 1901200

Description

PURCHASED SEPT. OF 2004 FOR $15,000

Justification

Expenditures	FY '23	FY '24	FY '25	FY '26	FY '27	Total
Equip/Vehicles/Furnishings				15,000		15,000
Total				**15,000**		**15,000**

Funding Sources	FY '23	FY '24	FY '25	FY '26	FY '27	Total
612 - WPCP REVENUE FUND				15,000		15,000
Total				**15,000**		**15,000**

Budget Impact/Other

Budget Items	FY '23	FY '24	FY '25	FY '26	FY '27	Total
5750.000: OTHER CAPITAL EQUIPMENT=>5,000				15,000		15,000
Total				**15,000**		**15,000**

City Capital Plan Equipment Replacment

FY '23 *thru* FY '27

City of Marshalltown, Iowa

Department WPCP DIVISION
Contact

Project # BLR 1200 015
Project Name SUPERVISORY CONTROL UPGRADE-BOILER BLDG

Type Equipment
Useful Life 10 years
Category 520520 WPCP EXP-TREATM
Priority Critical
Status Active
Total Project Cost: $15,000

Division WPC-PLANT
Object 5749.000 OTHER CAPITAL EQ
Location 1901200

Description

PURCHASED SEPT. 2004 FOR 15,000.

Justification

Expenditures	FY '23	FY '24	FY '25	FY '26	FY '27	Total
Equip/Vehicles/Furnishings		15,000				15,000
Total		**15,000**				**15,000**

Funding Sources	FY '23	FY '24	FY '25	FY '26	FY '27	Total
615 - WPCP IMPROVMNTS		15,000				15,000
Total		**15,000**				**15,000**

Budget Impact/Other

Budget Items	FY '23	FY '24	FY '25	FY '26	FY '27	Total
5750.000: OTHER CAPITAL EQUIPMENT=>5,000		15,000				15,000
Total		**15,000**				**15,000**

City Capital Plan Equipment Replacment

FY '23 *thru* FY '27

City of Marshalltown, Iowa

Department WPCP DIVISION
Contact

Project # CMP 1500 002
Project Name RE-ROOF - ENGINE BUILDING

Type Maintenance
Useful Life 15 years
Category 520520 WPCP EXP-TREATM
Priority Critical
Status Active
Total Project Cost: $25,000

Division WPC-PLANT
Object 5776.000 BUILDINGS & IMPR
Location 1901500

Description

RE-ROOFED IN 2004 FOR $19,000

Justification

Expenditures	FY '23	FY '24	FY '25	FY '26	FY '27	Total
Maintenance		25,000				25,000
Total		**25,000**				**25,000**

Funding Sources	FY '23	FY '24	FY '25	FY '26	FY '27	Total
612 - WPCP REVENUE FUND		25,000				25,000
Total		**25,000**				**25,000**

Budget Impact/Other

Budget Items	FY '23	FY '24	FY '25	FY '26	FY '27	Total
5776.000: BUILDINGS & IMPROVEMENTS=>5,000		25,000				25,000
Total		**25,000**				**25,000**

City Capital Plan Equipment Replacment

FY '23 *thru* FY '27

City of Marshalltown, Iowa

Department WPCP DIVISION
Contact

Project # CMP 1500 014
Project Name RAW WASTE PUMP #3 - COMPRESSOR BLDG

Type Equipment
Useful Life 30 years
Category 520520 WPCP EXP-TREATM
Priority Critical
Status Active

Division WPC-PLANT
Object 5749.000 OTHER CAPITAL EQ
Location 1901500

Total Project Cost: **$15,000**

Description

PURCHASED IN 1991 FOR $6,000.

Justification

Expenditures	FY '23	FY '24	FY '25	FY '26	FY '27	Total
Equip/Vehicles/Furnishings		15,000				15,000
Total		**15,000**				**15,000**

Funding Sources	FY '23	FY '24	FY '25	FY '26	FY '27	Total
612 - WPCP REVENUE FUND		15,000				15,000
Total		**15,000**				**15,000**

Budget Impact/Other

Budget Items	FY '23	FY '24	FY '25	FY '26	FY '27	Total
5750.000: OTHER CAPITAL EQUIPMENT=>5,000		15,000				15,000
Total		**15,000**				**15,000**

City Capital Plan Equipment Replacment

FY '23 *thru* FY '27

City of Marshalltown, Iowa

Department WPCP DIVISION
Contact

Project # CMP 1500 028
Project Name HOFFMAN BLOWER #3 BEARINGS-COMP BLDG

Type Maintenance
Useful Life 20 years
Category 520520 WPCP EXP-TREATM
Priority Critical
Status Active
Total Project Cost: $2,000

Division WPC-PLANT
Object 5410.000 REPAIRS/MAINT
Location 1901500

Description

NEW IN 1991

Justification

Expenditures	FY '23	FY '24	FY '25	FY '26	FY '27	Total
Maintenance				2,000		2,000
Total				**2,000**		**2,000**

Funding Sources	FY '23	FY '24	FY '25	FY '26	FY '27	Total
612 - WPCP REVENUE FUND				2,000		2,000
Total				**2,000**		**2,000**

Budget Impact/Other

Budget Items	FY '23	FY '24	FY '25	FY '26	FY '27	Total
5410.000: REPAIRS / MAINTENANCE				2,000		2,000
Total				**2,000**		**2,000**

City Capital Plan Equipment Replacment

FY '23 *thru* FY '27

City of Marshalltown, Iowa

Department WPCP DIVISION
Contact

Project # CMP 1500 033
Project Name GENERATOR CONTROL REPLACEMENT-COMP BLDG

Type Equipment
Useful Life 20 years
Category 520520 WPCP EXP-TREATM
Priority Critical
Status Active
Total Project Cost: $180,000

Division WPC-PLANT
Object 5749.000 OTHER CAPITAL EQ
Location 1901500

Description

REPLACED IN SEPT. 2004 FOR $180,000.

Justification

Expenditures	FY '23	FY '24	FY '25	FY '26	FY '27	Total
Equip/Vehicles/Furnishings			180,000			180,000
Total			**180,000**			**180,000**

Funding Sources	FY '23	FY '24	FY '25	FY '26	FY '27	Total
612 - WPCP REVENUE FUND			180,000			180,000
Total			**180,000**			**180,000**

Budget Impact/Other

Budget Items	FY '23	FY '24	FY '25	FY '26	FY '27	Total
5750.000: OTHER CAPITAL EQUIPMENT=>5,000			180,000			180,000
Total			**180,000**			**180,000**

City Capital Plan Equipment Replacment

FY '23 *thru* FY '27

City of Marshalltown, Iowa

Department WPCP DIVISION
Contact

Project # CMP 1500 042
Project Name NORTH TUNNEL MLSS XFER PUMP-COMP BLDG

Type Equipment
Useful Life 20 years
Category 520520 WPCP EXP-TREATM
Priority Critical
Status Active

Division WPC-PLANT
Object 5749.000 OTHER CAPITAL EQ
Location 1901500

Total Project Cost: **$10,000**

Description

PURCHASED IN 1998 FOR $8,000.

Justification

Expenditures	FY '23	FY '24	FY '25	FY '26	FY '27	Total
Equip/Vehicles/Furnishings				10,000		10,000
Total				**10,000**		**10,000**

Funding Sources	FY '23	FY '24	FY '25	FY '26	FY '27	Total
612 - WPCP REVENUE FUND				10,000		10,000
Total				**10,000**		**10,000**

Budget Impact/Other

Budget Items	FY '23	FY '24	FY '25	FY '26	FY '27	Total
5750.000: OTHER CAPITAL EQUIPMENT=>5,000				10,000		10,000
Total				**10,000**		**10,000**

City Capital Plan Equipment Replacment

FY '23 *thru* FY '27

City of Marshalltown, Iowa

Department WPCP DIVISION
Contact

Project # CMP 1500 044
Project Name AIR COMPRESSOR #1, #2 REPLACEMENT-SUB BASEMENT

Type Equipment
Useful Life 25 years
Category 520520 WPCP EXP-TREATM
Priority Critical
Status Active

Division WPC-PLANT
Object 5749.000 OTHER CAPITAL EQ
Location 1901500

Total Project Cost: **$35,000**

Description

Replacing air compressors.

Justification

Expenditures	FY '23	FY '24	FY '25	FY '26	FY '27	Total
Equip/Vehicles/Furnishings		35,000				35,000
Total		**35,000**				**35,000**

Funding Sources	FY '23	FY '24	FY '25	FY '26	FY '27	Total
612 - WPCP REVENUE FUND		35,000				35,000
Total		**35,000**				**35,000**

Budget Impact/Other

Budget Items	FY '23	FY '24	FY '25	FY '26	FY '27	Total
5750.000: OTHER CAPITAL EQUIPMENT=>5,000		35,000				35,000
Total		**35,000**				**35,000**

City Capital Plan Equipment Replacment

FY '23 *thru* FY '27

City of Marshalltown, Iowa

Department WPCP DIVISION
Contact

Project # CMP 1500 046
Project Name MASTER RADIO - RTU-COMP BLDG

Type Equipment
Useful Life 10 years
Category 520520 WPCP EXP-TREATM

Division WPC-PLANT
Object 5749.000 OTHER CAPITAL EQ
Priority Critical
Location 1901500
Status Active
Total Project Cost: **$25,000**

Description

REPLACEMENT RTU, CURRENT UNIT TO SMALL FOR ALL THE DATA HANDLING NEED TO UPGRADE FOR TURNER STREET LIFT STATION. Proposal # 061031BJW1DO-COMPLETED 10-6-08

Justification

Expenditures	FY '23	FY '24	FY '25	FY '26	FY '27	Total
Equip/Vehicles/Furnishings		25,000				25,000
Total		**25,000**				**25,000**

Funding Sources	FY '23	FY '24	FY '25	FY '26	FY '27	Total
615 - WPCP IMPROVMNTS		25,000				25,000
Total		**25,000**				**25,000**

Budget Impact/Other

Budget Items	FY '23	FY '24	FY '25	FY '26	FY '27	Total
5750.000: OTHER CAPITAL EQUIPMENT=>5,000		25,000				25,000
Total		**25,000**				**25,000**

City Capital Plan Equipment Replacment

FY '23 *thru* FY '27

City of Marshalltown, Iowa

Department WPCP DIVISION
Contact

Project # CMP 1500 049
Project Name MAU - 1- COMP BLDG

Type Equipment
Useful Life 20 years
Category 520520 WPCP EXP-TREATM

Division WPC-PLANT
Object 5749.000 OTHER CAPITAL EQ
Priority Critical
Location 1901500
Status Active
Total Project Cost: **$70,000**

Description

PURCHASED SEPT. 2004 FOR $70,000.

Justification

Expenditures	FY '23	FY '24	FY '25	FY '26	FY '27	Total
Equip/Vehicles/Furnishings		70,000				70,000
Total		**70,000**				**70,000**

Funding Sources	FY '23	FY '24	FY '25	FY '26	FY '27	Total
612 - WPCP REVENUE FUND		70,000				70,000
Total		**70,000**				**70,000**

Budget Impact/Other

Budget Items	FY '23	FY '24	FY '25	FY '26	FY '27	Total
5750.000: OTHER CAPITAL EQUIPMENT=>5,000		70,000				70,000
Total		**70,000**				**70,000**

City Capital Plan Equipment Replacment

FY '23 *thru* FY '27

City of Marshalltown, Iowa

Department WPCP DIVISION
Contact

Project # CMP 1500 050
Project Name MAU-1 REBUILD-COMP BLDG

Type Maintenance
Useful Life 10 years
Category 520520 WPCP EXP-TREATM

Division WPC-PLANT
Object 5749.000 OTHER CAPITAL EQ
Priority Critical
Location 1901500
Status Active
Total Project Cost: **$25,000**

Description

PURCHASED SEPT 2004, EST TO REBUILD $10,000.

Justification

Expenditures	FY '23	FY '24	FY '25	FY '26	FY '27	Total
Maintenance		25,000				25,000
Total		**25,000**				**25,000**

Funding Sources	FY '23	FY '24	FY '25	FY '26	FY '27	Total
612 - WPCP REVENUE FUND		25,000				25,000
Total		**25,000**				**25,000**

Budget Impact/Other

Budget Items	FY '23	FY '24	FY '25	FY '26	FY '27	Total
5750.000: OTHER CAPITAL EQUIPMENT=>5,000		25,000				25,000
Total		**25,000**				**25,000**

City Capital Plan Equipment Replacment

FY '23 *thru* FY '27

City of Marshalltown, Iowa

Department WPCP DIVISION
Contact

Project # CMP 1500 051
Project Name FLUID COOLER-COMP BLDG

Type Equipment
Useful Life 20 years
Category 520520 WPCP EXP-TREATM
Priority Critical
Status Active
Total Project Cost: $25,000

Division WPC-PLANT
Object 5749.000 OTHER CAPITAL EQ
Location 1901500

Description

PURCHASED IN SEPT. 2004 FOR $25,000.

Justification

Expenditures	FY '23	FY '24	FY '25	FY '26	FY '27	Total
Equip/Vehicles/Furnishings			25,000			25,000
Total			**25,000**			**25,000**

Funding Sources	FY '23	FY '24	FY '25	FY '26	FY '27	Total
612 - WPCP REVENUE FUND			25,000			25,000
Total			**25,000**			**25,000**

Budget Impact/Other

Budget Items	FY '23	FY '24	FY '25	FY '26	FY '27	Total
5750.000: OTHER CAPITAL EQUIPMENT=>5,000			25,000			25,000
Total			**25,000**			**25,000**

City Capital Plan Equipment Replacment

FY '23 *thru* FY '27

City of Marshalltown, Iowa

Department WPCP DIVISION
Contact

Project # CMP 1500 055
Project Name SUPERVISORY CONTROL UPGRADE-COMP BLDG

Type Equipment
Useful Life 10 years
Category 520520 WPCP EXP-TREATM
Priority Critical
Status Active
Total Project Cost: **$15,000**

Division WPC-PLANT
Object 5749.000 OTHER CAPITAL EQ
Location 1901500

Description

PURCHASED SEPT. 2004 FOR $15,000.

Justification

Expenditures	FY '23	FY '24	FY '25	FY '26	FY '27	Total
Equip/Vehicles/Furnishings		15,000				15,000
Total		**15,000**				**15,000**

Funding Sources	FY '23	FY '24	FY '25	FY '26	FY '27	Total
615 - WPCP IMPROVMNTS		15,000				15,000
Total		**15,000**				**15,000**

Budget Impact/Other

Budget Items	FY '23	FY '24	FY '25	FY '26	FY '27	Total
5750.000: OTHER CAPITAL EQUIPMENT=>5,000		15,000				15,000
Total		**15,000**				**15,000**

City Capital Plan Equipment Replacment

FY '23 *thru* FY '27

City of Marshalltown, Iowa

Department WPCP DIVISION
Contact

Project # CNC 1700 001
Project Name CONCENTRATE DRIVE (EAST)-& (WEST) CONCENTRATE B

Type Equipment
Useful Life 40 years
Category 520520 WPCP EXP-TREATM
Priority Critical
Status Active

Division WPC-PLANT
Object 5749.000 OTHER CAPITAL EQ
Location 1901700

Total Project Cost: **$30,000**

Description

PURCHASED IN 1972, EST COST $15,000.

Justification

Expenditures	FY '23	FY '24	FY '25	FY '26	FY '27	Total
Equip/Vehicles/Furnishings		30,000				30,000
Total		**30,000**				**30,000**

Funding Sources	FY '23	FY '24	FY '25	FY '26	FY '27	Total
612 - WPCP REVENUE FUND		30,000				30,000
Total		**30,000**				**30,000**

Budget Impact/Other

Budget Items	FY '23	FY '24	FY '25	FY '26	FY '27	Total
5750.000: OTHER CAPITAL EQUIPMENT=>5,000		30,000				30,000
Total		**30,000**				**30,000**

City Capital Plan Equipment Replacment

FY '23 *thru* FY '27

City of Marshalltown, Iowa

Department WPCP DIVISION
Contact

Project # DAF 1900 001
Project Name RE-ROOF DAF-MAINT SHOP BLDG

Type Maintenance
Useful Life 15 years
Category 520520 WPCP EXP-TREATM
Priority Critical
Status Active

Division WPC-PLANT
Object 5776.000 BUILDINGS & IMPR
Location 1901900

Total Project Cost: **$20,000**

Description

RE-ROOFED IN 1999 FOR $15250.

Justification

Expenditures	FY '23	FY '24	FY '25	FY '26	FY '27	Total
Maintenance		20,000				20,000
Total		**20,000**				**20,000**

Funding Sources	FY '23	FY '24	FY '25	FY '26	FY '27	Total
612 - WPCP REVENUE FUND		20,000				20,000
Total		**20,000**				**20,000**

Budget Impact/Other

Budget Items	FY '23	FY '24	FY '25	FY '26	FY '27	Total
5776.000: BUILDINGS & IMPROVEMENTS=>5,000		20,000				20,000
Total		**20,000**				**20,000**

City Capital Plan Equipment Replacment

FY '23 *thru* FY '27

City of Marshalltown, Iowa

Department WPCP DIVISION
Contact

Project # DAF 1900 013
Project Name DAF #1 REPLACE w/ RDT-DAF BLDG

Type Equipment
Useful Life 25 years
Category 520520 WPCP EXP-TREATM
Priority Critical
Status Active
Total Project Cost: $200,000

Division WPC-PLANT
Object 5749.000 OTHER CAPITAL EQ
Location 1901900

Description

PURCHASED IN 1987 FOR $20,000.

Justification

Expenditures	FY '23	FY '24	FY '25	FY '26	FY '27	Total
Equip/Vehicles/Furnishings		200,000				200,000
Total		**200,000**				**200,000**

Funding Sources	FY '23	FY '24	FY '25	FY '26	FY '27	Total
612 - WPCP REVENUE FUND		200,000				200,000
Total		**200,000**				**200,000**

Budget Impact/Other

Budget Items	FY '23	FY '24	FY '25	FY '26	FY '27	Total
5750.000: OTHER CAPITAL EQUIPMENT=>5,000		200,000				200,000
Total		**200,000**				**200,000**

City Capital Plan Equipment Replacment

FY '23 *thru* FY '27

City of Marshalltown, Iowa

Department WPCP DIVISION
Contact

Project # DAF 1900 014
Project Name DAF #2 REPLACE w/ RDT-DAF BLDG

Type Equipment
Useful Life 25 years
Category 520520 WPCP EXP-TREATM
Priority Critical
Status Active
Total Project Cost: $200,000

Division WPC-PLANT
Object 5749.000 OTHER CAPITAL EQ
Location 1901900

Description

PURCHASED IN 1987 FOR $20,000.

Justification

Expenditures	FY '23	FY '24	FY '25	FY '26	FY '27	Total
Equip/Vehicles/Furnishings		200,000				200,000
Total		**200,000**				**200,000**

Funding Sources	FY '23	FY '24	FY '25	FY '26	FY '27	Total
612 - WPCP REVENUE FUND		200,000				200,000
Total		**200,000**				**200,000**

Budget Impact/Other

Budget Items	FY '23	FY '24	FY '25	FY '26	FY '27	Total
5750.000: OTHER CAPITAL EQUIPMENT=>5,000		200,000				200,000
Total		**200,000**				**200,000**

City Capital Plan Equipment Replacment

FY '23 *thru* FY '27

City of Marshalltown, Iowa

Department WPCP DIVISION
Contact

Project # DAF 1900 015
Project Name DAF #1 INLET FLOW METER-DAF BLDG

Type Equipment
Useful Life 20 years
Category 520520 WPCP EXP-TREATM
Priority Critical
Status Active
Total Project Cost: $3,120

Division WPC-PLANT
Object 5718.000 MINOR EQUIPMENT
Location 1901900

Description

PURCHASED IN 1987.

Justification

Expenditures	FY '23	FY '24	FY '25	FY '26	FY '27	Total
Equip/Vehicles/Furnishings					3,120	3,120
Total					**3,120**	**3,120**

Funding Sources	FY '23	FY '24	FY '25	FY '26	FY '27	Total
612 - WPCP REVENUE FUND					3,120	3,120
Total					**3,120**	**3,120**

Budget Impact/Other

Budget Items	FY '23	FY '24	FY '25	FY '26	FY '27	Total
5718.000: MINOR EQUIPMENT <5,000					3,120	3,120
Total					**3,120**	**3,120**

City Capital Plan Equipment Replacment

FY '23 *thru* FY '27

City of Marshalltown, Iowa

Department WPCP DIVISION
Contact

Project # DAF 1900 016
Project Name DAF #1 RECYCLE FLOW METER-DAF BLDG

Type Equipment
Useful Life 20 years
Category 520520 WPCP EXP-TREATM

Division WPC-PLANT
Object 5718.000 MINOR EQUIPMENT
Priority Critical
Location 1901900
Status Active
Total Project Cost: **$3,120**

Description

PURCHASED IN 1987.

Justification

Expenditures	FY '23	FY '24	FY '25	FY '26	FY '27	Total
Equip/Vehicles/Furnishings					3,120	3,120
Total					**3,120**	**3,120**

Funding Sources	FY '23	FY '24	FY '25	FY '26	FY '27	Total
612 - WPCP REVENUE FUND					3,120	3,120
Total					**3,120**	**3,120**

Budget Impact/Other

Budget Items	FY '23	FY '24	FY '25	FY '26	FY '27	Total
5718.000: MINOR EQUIPMENT <5,000					3,120	3,120
Total					**3,120**	**3,120**

City Capital Plan Equipment Replacment

FY '23 *thru* FY '27

City of Marshalltown, Iowa

Department WPCP DIVISION
Contact

Project # DAF 1900 018
Project Name DAF #2 INLET FLOW METER-DAF BLDG

Type Equipment
Useful Life 20 years
Category 520520 WPCP EXP-TREATM
Priority Critical
Status Active
Total Project Cost: $3,120

Division WPC-PLANT
Object 5718.000 MINOR EQUIPMENT
Location 1901900

Description

PURCHASED IN 1987.

Justification

Expenditures	FY '23	FY '24	FY '25	FY '26	FY '27	Total
Equip/Vehicles/Furnishings					3,120	3,120
Total					**3,120**	**3,120**

Funding Sources	FY '23	FY '24	FY '25	FY '26	FY '27	Total
612 - WPCP REVENUE FUND					3,120	3,120
Total					**3,120**	**3,120**

Budget Impact/Other

Budget Items	FY '23	FY '24	FY '25	FY '26	FY '27	Total
5718.000: MINOR EQUIPMENT <5,000					3,120	3,120
Total					**3,120**	**3,120**

City Capital Plan Equipment Replacment

FY '23 *thru* FY '27

City of Marshalltown, Iowa

Department WPCP DIVISION
Contact

Project # DAF 1900 019
Project Name DAF #2 RECYCLE FLOW METER-DAF BLDG

Type Equipment
Useful Life 20 years
Category 520520 WPCP EXP-TREATM
Priority Critical
Status Active
Total Project Cost: $3,120

Division WPC-PLANT
Object 5718.000 MINOR EQUIPMENT
Location 1901900

Description

PURCHASED IN 1987.

Justification

Expenditures	FY '23	FY '24	FY '25	FY '26	FY '27	Total
Equip/Vehicles/Furnishings					3,120	3,120
Total					**3,120**	**3,120**

Funding Sources	FY '23	FY '24	FY '25	FY '26	FY '27	Total
612 - WPCP REVENUE FUND					3,120	3,120
Total					**3,120**	**3,120**

Budget Impact/Other

Budget Items	FY '23	FY '24	FY '25	FY '26	FY '27	Total
5718.000: MINOR EQUIPMENT <5,000					3,120	3,120
Total					**3,120**	**3,120**

City Capital Plan Equipment Replacment

FY '23 *thru* FY '27

City of Marshalltown, Iowa

Department WPCP DIVISION
Contact

Project # DAF 1900 025
Project Name SUPERVISORY CONTROL UPGRADE-DAF BLDG

Type Equipment
Useful Life 10 years
Category 520520 WPCP EXP-TREATM
Priority Critical
Status Active

Division WPC-PLANT
Object 5749.000 OTHER CAPITAL EQ
Location 1901900

Total Project Cost: **$15,000**

Description

PURCHASED SEPT. 2004, FOR $15,000.

Justification

Expenditures	FY '23	FY '24	FY '25	FY '26	FY '27	Total
Equip/Vehicles/Furnishings		15,000				15,000
Total		**15,000**				**15,000**

Funding Sources	FY '23	FY '24	FY '25	FY '26	FY '27	Total
615 - WPCP IMPROVMNTS		15,000				15,000
Total		**15,000**				**15,000**

Budget Impact/Other

Budget Items	FY '23	FY '24	FY '25	FY '26	FY '27	Total
5750.000: OTHER CAPITAL EQUIPMENT=>5,000		15,000				15,000
Total		**15,000**				**15,000**

City Capital Plan Equipment Replacment

FY '23 *thru* FY '27

City of Marshalltown, Iowa

Department WPCP DIVISION
Contact

Project # DCB 2100 014
Project Name AIR DIA. PUMP #1 REPLACEMENT-DIG CONTR BLDG

Type Equipment
Useful Life 20 years
Category 520520 WPCP EXP-TREATM
Priority Critical
Status Active
Total Project Cost: $20,000

Division WPC-PLANT
Object 5749.000 OTHER CAPITAL EQ
Location 1902100

Description

PURCHASED IN 1988 FOR $5,500.

Justification

Expenditures	FY '23	FY '24	FY '25	FY '26	FY '27	Total
Equip/Vehicles/Furnishings		20,000				20,000
Total		**20,000**				**20,000**

Funding Sources	FY '23	FY '24	FY '25	FY '26	FY '27	Total
612 - WPCP REVENUE FUND		20,000				20,000
Total		**20,000**				**20,000**

Budget Impact/Other

Budget Items	FY '23	FY '24	FY '25	FY '26	FY '27	Total
5750.000: OTHER CAPITAL EQUIPMENT=>5,000		20,000				20,000
Total		**20,000**				**20,000**

City Capital Plan Equipment Replacment

FY '23 *thru* FY '27

City of Marshalltown, Iowa

Department WPCP DIVISION
Contact

Project # DCB 2100 015
Project Name AIR DIA. PUMP #2 REPLACEMENT-DIG CONTR BLDG

Type Equipment
Useful Life 20 years
Category 520520 WPCP EXP-TREATM
Priority Critical
Status Active
Total Project Cost: $20,000

Division WPC-PLANT
Object 5749.000 OTHER CAPITAL EQ
Location 1902100

Description

PURCHASED IN 1988 FOR $5,500.

Justification

Expenditures	FY '23	FY '24	FY '25	FY '26	FY '27	Total
Equip/Vehicles/Furnishings		20,000				20,000
Total		**20,000**				**20,000**

Funding Sources	FY '23	FY '24	FY '25	FY '26	FY '27	Total
612 - WPCP REVENUE FUND		20,000				20,000
Total		**20,000**				**20,000**

Budget Impact/Other

Budget Items	FY '23	FY '24	FY '25	FY '26	FY '27	Total
5750.000: OTHER CAPITAL EQUIPMENT=>5,000		20,000				20,000
Total		**20,000**				**20,000**

City Capital Plan Equipment Replacment

FY '23 *thru* FY '27

City of Marshalltown, Iowa

Department WPCP DIVISION
Contact

Project # DCB 2100 019
Project Name GAS COMPRESSOR #2 REBUILD-DIG CONTR BLDG

Type Maintenance
Useful Life 10 years
Category 520520 WPCP EXP-TREATM

Division WPC-PLANT
Object 5749.000 OTHER CAPITAL EQ
Priority Critical
Location 1902100
Status Active
Total Project Cost: **$9,000**

Description

REBUILT 1992-93 WHEN COMPRESSOR ROOM FROZE UP, REBUILT IN 2002 FOR $6,000. REBUILT 2007 FOR 6,000.

Justification

Expenditures	FY '23	FY '24	FY '25	FY '26	FY '27	Total
Maintenance				9,000		9,000
Total				**9,000**		**9,000**

Funding Sources	FY '23	FY '24	FY '25	FY '26	FY '27	Total
612 - WPCP REVENUE FUND				9,000		9,000
Total				**9,000**		**9,000**

Budget Impact/Other

Budget Items	FY '23	FY '24	FY '25	FY '26	FY '27	Total
5750.000: OTHER CAPITAL EQUIPMENT=>5,000				9,000		9,000
Total				**9,000**		**9,000**

City Capital Plan Equipment Replacment

FY '23 *thru* FY '27

City of Marshalltown, Iowa

Department WPCP DIVISION
Contact

Project # DCB 2100 028
Project Name PIPE INSULATION-DIG CONTR BLDG

Type Improvement
Useful Life 15 years
Category 520520 WPCP EXP-TREATM
Priority Critical
Status Active
Total Project Cost: $8,000

Division WPC-PLANT
Object 5776.000 BUILDINGS & IMPR
Location 1902100

Description

Insulation of sludge piping that causes condensation from the cold pipes. New Purchase

Justification

Expenditures	FY '23	FY '24	FY '25	FY '26	FY '27	Total
Buildings	8,000					8,000
Total	**8,000**					**8,000**

Funding Sources	FY '23	FY '24	FY '25	FY '26	FY '27	Total
612 - WPCP REVENUE FUND	8,000					8,000
Total	**8,000**					**8,000**

Budget Impact/Other

Budget Items	FY '23	FY '24	FY '25	FY '26	FY '27	Total
5776.000: BUILDINGS & IMPROVEMENTS=>5,000	8,000					8,000
Total	**8,000**					**8,000**

City Capital Plan Equipment Replacment

FY '23 *thru* FY '27

City of Marshalltown, Iowa

Department WPCP DIVISION
Contact

Project # DCB 2100 031
Project Name MAU - 2 (CONCENTRATE)-DIG CONTR BLDG

Type Equipment
Useful Life 20 years
Category 520520 WPCP EXP-TREATM
Priority Critical
Status Active

Division WPC-PLANT
Object 5749.000 OTHER CAPITAL EQ
Location 1902100

Total Project Cost: **$30,000**

Description

PURCHASED IN SEPT. 2004 FOR $30,000.

Justification

Expenditures	FY '23	FY '24	FY '25	FY '26	FY '27	Total
Equip/Vehicles/Furnishings			30,000			30,000
Total			**30,000**			**30,000**

Funding Sources	FY '23	FY '24	FY '25	FY '26	FY '27	Total
612 - WPCP REVENUE FUND			30,000			30,000
Total			**30,000**			**30,000**

Budget Impact/Other

Budget Items	FY '23	FY '24	FY '25	FY '26	FY '27	Total
5750.000: OTHER CAPITAL EQUIPMENT=>5,000			30,000			30,000
Total			**30,000**			**30,000**

City Capital Plan Equipment Replacment

FY '23 *thru* FY '27

City of Marshalltown, Iowa

Department WPCP DIVISION
Contact

Project # DCB 2100 032
Project Name MAU-2 (CONCENTRATE) REBUILD-DIG CONTR BLDG

Type Maintenance
Useful Life 10 years
Category 520520 WPCP EXP-TREATM
Priority Critical
Status Active

Division
Location 1902100
Object 5749.000 OTHER CAPITAL EQ

Total Project Cost: **$25,000**

Description

REBUILD MAKEUP AIR UNIT, PURCHASED IN SEPT. 2004 , EST $10,000.

Justification

Expenditures	FY '23	FY '24	FY '25	FY '26	FY '27	Total
Maintenance		25,000				25,000
Total		**25,000**				**25,000**

Funding Sources	FY '23	FY '24	FY '25	FY '26	FY '27	Total
612 - WPCP REVENUE FUND		25,000				25,000
Total		**25,000**				**25,000**

Budget Impact/Other

Budget Items	FY '23	FY '24	FY '25	FY '26	FY '27	Total
5750.000: OTHER CAPITAL EQUIPMENT=>5,000		25,000				25,000
Total		**25,000**				**25,000**

City Capital Plan Equipment Replacment

FY '23 *thru* FY '27

City of Marshalltown, Iowa

Department WPCP DIVISION
Contact

Project # DCB 2100 033
Project Name WEMCO PUMP #2 (LOWER LEVEL)-DIG CONTR BLDG

Type Equipment
Useful Life 20 years
Category 520520 WPCP EXP-TREATM
Priority Critical
Status Active
Total Project Cost: **$20,000**

Division WPC-PLANT
Object 5749.000 OTHER CAPITAL EQ
Location 1902100

Description

PURCHASED IN SEPT. 2004 FOR $20,000.

Justification

Expenditures	FY '23	FY '24	FY '25	FY '26	FY '27	Total
Equip/Vehicles/Furnishings			20,000			20,000
Total			**20,000**			**20,000**

Funding Sources	FY '23	FY '24	FY '25	FY '26	FY '27	Total
612 - WPCP REVENUE FUND			20,000			20,000
Total			**20,000**			**20,000**

Budget Impact/Other

Budget Items	FY '23	FY '24	FY '25	FY '26	FY '27	Total
5750.000: OTHER CAPITAL EQUIPMENT=>5,000			20,000			20,000
Total			**20,000**			**20,000**

City Capital Plan Equipment Replacment

FY '23 *thru* FY '27

City of Marshalltown, Iowa

Department WPCP DIVISION
Contact

Project # DCB 2100 035
Project Name DAY TANK PROPELLER MIXER-DIG CONTR BLDG

Type Equipment
Useful Life 20 years
Category 520520 WPCP EXP-TREATM
Priority Critical
Status Active

Division WPC-PLANT
Object 5749.000 OTHER CAPITAL EQ
Location 1902100

Total Project Cost: **$13,000**

Description

PURCHASED IN SEPT. 2004 FOR $13,000.

Justification

Expenditures	FY '23	FY '24	FY '25	FY '26	FY '27	Total
Equip/Vehicles/Furnishings			13,000			13,000
Total			**13,000**			**13,000**

Funding Sources	FY '23	FY '24	FY '25	FY '26	FY '27	Total
612 - WPCP REVENUE FUND			13,000			13,000
Total			**13,000**			**13,000**

Budget Impact/Other

Budget Items	FY '23	FY '24	FY '25	FY '26	FY '27	Total
5750.000: OTHER CAPITAL EQUIPMENT=>5,000			13,000			13,000
Total			**13,000**			**13,000**

City Capital Plan Equipment Replacment

FY '23 *thru* FY '27

City of Marshalltown, Iowa

Department WPCP DIVISION
Contact

Project # DCB 2100 037
Project Name DIG FEED PUMP #1-DIG CONTR BLDG

Type Equipment
Useful Life 20 years
Category 520520 WPCP EXP-TREATM
Priority Critical
Status Active
Total Project Cost: **$10,000**

Division WPC-PLANT
Object 5749.000 OTHER CAPITAL EQ
Location 1902100

Description

PURCHASED IN SEPT. 2004 FOR $10,000.

Justification

Expenditures	FY '23	FY '24	FY '25	FY '26	FY '27	Total
Equip/Vehicles/Furnishings			10,000			10,000
Total			**10,000**			**10,000**

Funding Sources	FY '23	FY '24	FY '25	FY '26	FY '27	Total
612 - WPCP REVENUE FUND			10,000			10,000
Total			**10,000**			**10,000**

Budget Impact/Other

Budget Items	FY '23	FY '24	FY '25	FY '26	FY '27	Total
5750.000: OTHER CAPITAL EQUIPMENT=>5,000			10,000			10,000
Total			**10,000**			**10,000**

City Capital Plan Equipment Replacment

FY '23 *thru* FY '27

City of Marshalltown, Iowa

Department WPCP DIVISION
Contact

Project # DCB 2100 039
Project Name DIG FEED PUMP #2 REPLACEMENT-DIG CONTR BLDG

Type Equipment
Useful Life 20 years
Category 520520 WPCP EXP-TREATM
Priority Critical
Status Active
Total Project Cost: **$10,000**

Division WPC-PLANT
Object 5749.000 OTHER CAPITAL EQ
Location 1902100

Description

PURCHASED IN SEPT. 2004 FOR $10,000.

Justification

Expenditures	FY '23	FY '24	FY '25	FY '26	FY '27	Total
Equip/Vehicles/Furnishings			10,000			10,000
Total			**10,000**			**10,000**

Funding Sources	FY '23	FY '24	FY '25	FY '26	FY '27	Total
612 - WPCP REVENUE FUND			10,000			10,000
Total			**10,000**			**10,000**

Budget Impact/Other

Budget Items	FY '23	FY '24	FY '25	FY '26	FY '27	Total
5750.000: OTHER CAPITAL EQUIPMENT=>5,000			10,000			10,000
Total			**10,000**			**10,000**

City Capital Plan Equipment Replacment

FY '23 *thru* FY '27

City of Marshalltown, Iowa

Department WPCP DIVISION
Contact

Project # DCB 2100 041
Project Name DIG FEED PUMP GRINDER-DIG CONTR BLDG

Type Equipment
Useful Life 20 years
Category 520520 WPCP EXP-TREATM
Priority Critical
Status Active
Total Project Cost: $8,000

Division WPC-PLANT
Object 5749.000 OTHER CAPITAL EQ
Location 1902100

Description

PURCHASED SEPT. 2004 FOR $8,000.

Justification

Expenditures	FY '23	FY '24	FY '25	FY '26	FY '27	Total
Equip/Vehicles/Furnishings			8,000			8,000
Total			**8,000**			**8,000**

Funding Sources	FY '23	FY '24	FY '25	FY '26	FY '27	Total
612 - WPCP REVENUE FUND			8,000			8,000
Total			**8,000**			**8,000**

Budget Impact/Other

Budget Items	FY '23	FY '24	FY '25	FY '26	FY '27	Total
5750.000: OTHER CAPITAL EQUIPMENT=>5,000			8,000			8,000
Total			**8,000**			**8,000**

City Capital Plan Equipment Replacment

FY '23 *thru* FY '27

City of Marshalltown, Iowa

Department WPCP DIVISION
Contact

Project # DCB 2100 042
Project Name DIG TRANSFER PUMP #1 REPLACEME-DIG CONTR BLDG

Type Equipment
Useful Life 20 years
Category 520520 WPCP EXP-TREATM
Priority Critical
Status Active

Division WPC-PLANT
Object 5749.000 OTHER CAPITAL EQ
Location 1902100

Total Project Cost: **$10,000**

Description

PURCHASED IN SEPT. 2004 FOR $10,000.

Justification

Expenditures	FY '23	FY '24	FY '25	FY '26	FY '27	Total
Equip/Vehicles/Furnishings		10,000				10,000
Total		**10,000**				**10,000**

Funding Sources	FY '23	FY '24	FY '25	FY '26	FY '27	Total
612 - WPCP REVENUE FUND		10,000				10,000
Total		**10,000**				**10,000**

Budget Impact/Other

Budget Items	FY '23	FY '24	FY '25	FY '26	FY '27	Total
5750.000: OTHER CAPITAL EQUIPMENT=>5,000		10,000				10,000
Total		**10,000**				**10,000**

City Capital Plan Equipment Replacment

FY '23 *thru* FY '27

City of Marshalltown, Iowa

Department WPCP DIVISION
Contact

Project # DCB 2100 044
Project Name DIG TRANSER PUMP #2 REPLACEME-DIG CONTR BLDG

Type Equipment
Useful Life 20 years
Category 520520 WPCP EXP-TREATM

Division WPC-PLANT
Object 5749.000 OTHER CAPITAL EQ
Priority Critical
Location 1902100
Status Active
Total Project Cost: **$10,000**

Description

PURCHASED IN SEPT. 2004 FOR $10,000.

Justification

Expenditures	FY '23	FY '24	FY '25	FY '26	FY '27	Total
Equip/Vehicles/Furnishings			10,000			10,000
Total			**10,000**			**10,000**

Funding Sources	FY '23	FY '24	FY '25	FY '26	FY '27	Total
612 - WPCP REVENUE FUND			10,000			10,000
Total			**10,000**			**10,000**

Budget Impact/Other

Budget Items	FY '23	FY '24	FY '25	FY '26	FY '27	Total
5750.000: OTHER CAPITAL EQUIPMENT=>5,000			10,000			10,000
Total			**10,000**			**10,000**

City Capital Plan Equipment Replacment

FY '23 *thru* FY '27

City of Marshalltown, Iowa

Department WPCP DIVISION
Contact

Project # DCB 2100 047
Project Name DIG TRANS PUMP GRINDER REPLACE-DOG CONTR BLDG

Type Equipment
Useful Life 20 years
Category 520520 WPCP EXP-TREATM
Priority Critical
Status Active
Total Project Cost: $8,000

Division WPC-PLANT
Object 5749.000 OTHER CAPITAL EQ
Location 1902100

Description

PURCHASED IN SEPT. 2004 FOR $8,000.

Justification

Expenditures	FY '23	FY '24	FY '25	FY '26	FY '27	Total
Equip/Vehicles/Furnishings		8,000				8,000
Total		**8,000**				**8,000**

Funding Sources	FY '23	FY '24	FY '25	FY '26	FY '27	Total
612 - WPCP REVENUE FUND		8,000				8,000
Total		**8,000**				**8,000**

Budget Impact/Other

Budget Items	FY '23	FY '24	FY '25	FY '26	FY '27	Total
5750.000: OTHER CAPITAL EQUIPMENT=>5,000		8,000				8,000
Total		**8,000**				**8,000**

City Capital Plan Equipment Replacment

FY '23 *thru* FY '27

City of Marshalltown, Iowa

Department WPCP DIVISION
Contact

Project # DCB 2100 049
Project Name SPARE GRINDER-DIG CONTR BLDG

Type Equipment
Useful Life 20 years
Category 520520 WPCP EXP-TREATM
Priority Critical
Status Active
Total Project Cost: **$8,000**

Division WPC-PLANT
Object 5749.000 OTHER CAPITAL EQ
Location 1902100

Description

ROTATED IN WITH OTHER GRINDERS WHEN REBUILT PURCHASED IN SEPT. 2004 FOR $8,000.

Justification

Expenditures	FY '23	FY '24	FY '25	FY '26	FY '27	Total
Equip/Vehicles/Furnishings			8,000			8,000
Total			**8,000**			**8,000**

Funding Sources	FY '23	FY '24	FY '25	FY '26	FY '27	Total
612 - WPCP REVENUE FUND			8,000			8,000
Total			**8,000**			**8,000**

Budget Impact/Other

Budget Items	FY '23	FY '24	FY '25	FY '26	FY '27	Total
5750.000: OTHER CAPITAL EQUIPMENT=>5,000			8,000			8,000
Total			**8,000**			**8,000**

City Capital Plan Equipment Replacment

FY '23 *thru* FY '27

City of Marshalltown, Iowa

Department WPCP DIVISION
Contact

Project # DCB 2100 052
Project Name GAS COMPRESSOR #1 SEPERATOR-DIG CONTR BLDG

Type Equipment
Useful Life 18 years
Category 520520 WPCP EXP-TREATM
Priority Critical
Status Active
Total Project Cost: **$4,750**

Division WPC-PLANT
Object 5718.000 MINOR EQUIPMENT
Location 1902100

Description

WATER SEPERATOR NEEDS REPLACED DO TO CORROSION PURCHASED FALL 2006 FOR $4,740

Justification

Expenditures	FY '23	FY '24	FY '25	FY '26	FY '27	Total
Equip/Vehicles/Furnishings				4,750		4,750
Total				**4,750**		**4,750**

Funding Sources	FY '23	FY '24	FY '25	FY '26	FY '27	Total
612 - WPCP REVENUE FUND				4,750		4,750
Total				**4,750**		**4,750**

Budget Impact/Other

Budget Items	FY '23	FY '24	FY '25	FY '26	FY '27	Total
5718.000: MINOR EQUIPMENT <5,000				4,750		4,750
Total				**4,750**		**4,750**

City Capital Plan Equipment Replacment

FY '23 *thru* FY '27

City of Marshalltown, Iowa

Department WPCP DIVISION
Contact

Project # DCB 2100 053
Project Name GAS COMPRESSOR #2 SEPERATOR-DIG CONTR BLDG

Type Equipment
Useful Life 18 years
Category 520520 WPCP EXP-TREATM
Priority Critical
Status Active
Total Project Cost: **$4,750**

Division WPC-PLANT
Object 5718.000 MINOR EQUIPMENT
Location 1902100

Description

WATER SEPERATOR NEEDS REPLACED DO TO CORROSION PURCAHSED FALL OF 2006 FOR $4,740

Justification

Expenditures	FY '23	FY '24	FY '25	FY '26	FY '27	Total
Equip/Vehicles/Furnishings				4,750		4,750
Total				**4,750**		**4,750**

Funding Sources	FY '23	FY '24	FY '25	FY '26	FY '27	Total
612 - WPCP REVENUE FUND				4,750		4,750
Total				**4,750**		**4,750**

Budget Impact/Other

Budget Items	FY '23	FY '24	FY '25	FY '26	FY '27	Total
5718.000: MINOR EQUIPMENT <5,000				4,750		4,750
Total				**4,750**		**4,750**

City Capital Plan Equipment Replacment

FY '23 *thru* FY '27

City of Marshalltown, Iowa

Department WPCP DIVISION
Contact

Project # DCB 2100 054
Project Name #1 WEMCO PUMP-DIG CONTR BLDG

Type Equipment
Useful Life 30 years
Category 520520 WPCP EXP-TREATM

Division WPC-PLANT
Object
Priority Critical
Location 1902100
Status Active
Total Project Cost: **$40,000**

Description

FRONT WEMCO - USED TO PUMP PRIMARIES. PURCHASED IN 1980. EST COST $20,000. Rebuild to include a new motor, bearings, seal and empeller.

Justification

Expenditures	FY '23	FY '24	FY '25	FY '26	FY '27	Total
Equip/Vehicles/Furnishings		35,000				35,000
Total		**35,000**				**35,000**

Funding Sources	FY '23	FY '24	FY '25	FY '26	FY '27	Total
612 - WPCP REVENUE FUND		35,000				35,000
Total		**35,000**				**35,000**

Budget Impact/Other

Budget Items	FY '23	FY '24	FY '25	FY '26	FY '27	Total
5750.000: OTHER CAPITAL EQUIPMENT=>5,000		35,000				35,000
Total		**35,000**				**35,000**

City Capital Plan Equipment Replacment

FY '23 *thru* FY '27

City of Marshalltown, Iowa

Department WPCP DIVISION
Contact

Project # DCB 2100 056
Project Name WEMCO #3-DIG CONTR BLDG

Type Equipment
Useful Life 30 years
Category 520520 WPCP EXP-TREATM

Division WPC-PLANT
Object 5749.000 OTHER CAPITAL EQ
Priority Critical
Location 1902100
Status Active
Total Project Cost: **$30,000**

Description

REAR WEMCO LOCATED BY #3 DIGESTER,USED TO TRANSFER BIOSOLIDS COST: PURCHASED IN 1985, EST COST $20,000.

Justification

Expenditures	FY '23	FY '24	FY '25	FY '26	FY '27	Total
Equip/Vehicles/Furnishings		30,000				30,000
Total		**30,000**				**30,000**

Funding Sources	FY '23	FY '24	FY '25	FY '26	FY '27	Total
612 - WPCP REVENUE FUND		30,000				30,000
Total		**30,000**				**30,000**

Budget Impact/Other

Budget Items	FY '23	FY '24	FY '25	FY '26	FY '27	Total
5750.000: OTHER CAPITAL EQUIPMENT=>5,000		30,000				30,000
Total		**30,000**				**30,000**

City Capital Plan Equipment Replacment

FY '23 *thru* FY '27

City of Marshalltown, Iowa

Department WPCP DIVISION
Contact

Project # DG2 2002 001
Project Name MEMBRANE ROOF REPLACEMENT-DIG #2

Type Maintenance
Useful Life 15 years
Category 520520 WPCP EXP-TREATM
Priority Critical
Status Active

Division WPC-PLANT
Object 5776.000 BUILDINGS & IMPR
Location 1902002

Total Project Cost: **$38,000**

Description

WILL REQUIRE REPLACEMENT OF INSULATION- MEMBRANE IS ADHERED TO INSULATION PURCHASED ON SEPT. 2004. EST COST $29,000.

Justification

Expenditures	FY '23	FY '24	FY '25	FY '26	FY '27	Total
Maintenance			38,000			38,000
Total			**38,000**			**38,000**

Funding Sources	FY '23	FY '24	FY '25	FY '26	FY '27	Total
612 - WPCP REVENUE FUND			38,000			38,000
Total			**38,000**			**38,000**

Budget Impact/Other

Budget Items	FY '23	FY '24	FY '25	FY '26	FY '27	Total
5776.000: BUILDINGS & IMPROVEMENTS=>5,000			38,000			38,000
Total			**38,000**			**38,000**

City Capital Plan Equipment Replacment

FY '23 *thru* FY '27

City of Marshalltown, Iowa

Department WPCP DIVISION
Contact

Project # DG2 2002 003
Project Name PAINT LID-DIG #2

Type Maintenance
Useful Life 15 years
Category 520520 WPCP EXP-TREATM
Priority Critical
Status Active
Total Project Cost: $32,000

Division WPC-PLANT
Object 5776.000 BUILDINGS & IMPR
Location 1902002

Description

NEW SEPT. 2004. EST COST $25,000.

Justification

Expenditures	FY '23	FY '24	FY '25	FY '26	FY '27	Total
Maintenance			32,000			32,000
Total			**32,000**			**32,000**

Funding Sources	FY '23	FY '24	FY '25	FY '26	FY '27	Total
612 - WPCP REVENUE FUND			32,000			32,000
Total			**32,000**			**32,000**

Budget Impact/Other

Budget Items	FY '23	FY '24	FY '25	FY '26	FY '27	Total
5776.000: BUILDINGS & IMPROVEMENTS=>5,000			32,000			32,000
Total			**32,000**			**32,000**

City Capital Plan Equipment Replacment

FY '23 *thru* FY '27

City of Marshalltown, Iowa

Department WPCP DIVISION
Contact

Project # DG2 2002 011
Project Name CLEAN DIGESTER-DIG #2

Type Maintenance
Useful Life 20 years
Category 520520 WPCP EXP-TREATM

Division WPC-PLANT
Object 5340.010 CONTRACT-OUTSID
Priority Critical
Location 1902002
Status Active
Total Project Cost: **$20,000**

Description

PART OF LID PAINTING. CLEANED LAST- SEPT. 2004. EST COST $20,000.

Justification

Expenditures	FY '23	FY '24	FY '25	FY '26	FY '27	Total
Maintenance					20,000	20,000
Total					**20,000**	**20,000**

Funding Sources	FY '23	FY '24	FY '25	FY '26	FY '27	Total
612 - WPCP REVENUE FUND					20,000	20,000
Total					**20,000**	**20,000**

Budget Impact/Other

Budget Items	FY '23	FY '24	FY '25	FY '26	FY '27	Total
5342.000: CONTRACT-OUTSIDE HELP					20,000	20,000
Total					**20,000**	**20,000**

City Capital Plan Equipment Replacment

FY '23 *thru* FY '27

City of Marshalltown, Iowa

Department WPCP DIVISION
Contact

Project # DG3 2003 005
Project Name DIG#3 - MIXER #1 REBUILD

Type Maintenance
Useful Life 5 years
Category 520520 WPCP EXP-TREATM

Division WPC-PLANT
Object 5749.000 OTHER CAPITAL EQ
Priority Critical
Location 1902003
Status Active
Total Project Cost: **$25,000**

Description

CRANE AND BEARING REPLACEMENT, NEW IN 2005

Justification

Expenditures	FY '23	FY '24	FY '25	FY '26	FY '27	Total
Maintenance		25,000				25,000
Total		**25,000**				**25,000**

Funding Sources	FY '23	FY '24	FY '25	FY '26	FY '27	Total
615 - WPCP IMPROVMNTS		25,000				25,000
Total		**25,000**				**25,000**

Budget Impact/Other

Budget Items	FY '23	FY '24	FY '25	FY '26	FY '27	Total
5750.000: OTHER CAPITAL EQUIPMENT=>5,000		25,000				25,000
Total		**25,000**				**25,000**

City Capital Plan Equipment Replacment

FY '23 *thru* FY '27

City of Marshalltown, Iowa

Department WPCP DIVISION
Contact

Project # FCL 3100 002
Project Name REBUILD DRIVE - FINAL,#3

Type Equipment
Useful Life 30 years
Category 520520 WPCP EXP-TREATM

Division WPC-PLANT
Object 5749.000 OTHER CAPITAL EQ
Priority Critical
Location 1903100
Status Active
Total Project Cost: **$15,000**

Description

ON HOLD. PURCHASED IN 1984. EST COST $5,000.

Justification

Expenditures	FY '23	FY '24	FY '25	FY '26	FY '27	Total
Maintenance				15,000		15,000
Total				**15,000**		**15,000**

Funding Sources	FY '23	FY '24	FY '25	FY '26	FY '27	Total
612 - WPCP REVENUE FUND				15,000		15,000
Total				**15,000**		**15,000**

Budget Impact/Other

Budget Items	FY '23	FY '24	FY '25	FY '26	FY '27	Total
5750.000: OTHER CAPITAL EQUIPMENT=>5,000				15,000		15,000
Total				**15,000**		**15,000**

City Capital Plan Equipment Replacment

FY '23 *thru* FY '27

City of Marshalltown, Iowa

Department WPCP DIVISION
Contact

Project # FEB 2900 002
Project Name F.E.B. VALVE REBUILD & ACUATOR REPLACEMENT

Type Equipment
Useful Life 15 years
Category 520520 WPCP EXP-TREATM
Priority Not Applicable
Status Active
Total Project Cost: $5,050

Division WPC-PLANT
Object 5749.000 OTHER CAPITAL EQ
Location 1902900

Description

REBUILD THE PLUG VALVE AND REPLACE THE ACTUATOR

Justification

Expenditures	FY '23	FY '24	FY '25	FY '26	FY '27	Total
Equip/Vehicles/Furnishings				5,050		5,050
Total				**5,050**		**5,050**

Funding Sources	FY '23	FY '24	FY '25	FY '26	FY '27	Total
612 - WPCP REVENUE FUND				5,050		5,050
Total				**5,050**		**5,050**

Budget Impact/Other

Budget Items	FY '23	FY '24	FY '25	FY '26	FY '27	Total
5750.000: OTHER CAPITAL EQUIPMENT=>5,000				5,050		5,050
Total				**5,050**		**5,050**

City Capital Plan Equipment Replacment

FY '23 *thru* FY '27

City of Marshalltown, Iowa

Department WPCP DIVISION
Contact

Project # LAB 3700 005
Project Name GLYCOL VENTILATION SYSTEM- LAB BLDG

Type Equipment
Useful Life 15 years
Category 520520 WPCP EXP-TREATM
Priority Critical
Status Active

Division WPC-PLANT
Object 5776.000 BUILDINGS & IMPR
Location 1903700

Total Project Cost: **$87,000**

Description

DID A PREVENTIVE MAINTENANCE IN 2003. PURCHASED IN 1988 FOR $8,000. WILL INSTALL A GLYCOL SYSTEM SO THE HEAT LINES DON'T FREEZE UP.

Justification

Expenditures	FY '23	FY '24	FY '25	FY '26	FY '27	Total
Planning & Design Engineering					7,000	7,000
Total					**7,000**	**7,000**

Funding Sources	FY '23	FY '24	FY '25	FY '26	FY '27	Total
612 - WPCP REVENUE FUND					7,000	7,000
Total					**7,000**	**7,000**

Budget Impact/Other

Budget Items	FY '23	FY '24	FY '25	FY '26	FY '27	Total
5233.000: ENGINEERING					7,000	7,000
Total					**7,000**	**7,000**

City Capital Plan Equipment Replacment

FY '23 *thru* FY '27

City of Marshalltown, Iowa

Department WPCP DIVISION
Contact

Project # LAB 3700 006
Project Name HEATING & COOLING -LAB BLDG

Type Equipment
Useful Life 20 years
Category 520520 WPCP EXP-TREATM
Priority Critical
Status Active
Total Project Cost: $12,000

Division WPC-PLANT
Object 5776.000 BUILDINGS & IMPR
Location 1903700

Description

PURCHASED IN 1980, REPLACED IN 2001 FOR $9,000.

Justification

Expenditures	FY '23	FY '24	FY '25	FY '26	FY '27	Total
Equip/Vehicles/Furnishings		12,000				12,000
Total		**12,000**				**12,000**

Funding Sources	FY '23	FY '24	FY '25	FY '26	FY '27	Total
612 - WPCP REVENUE FUND		12,000				12,000
Total		**12,000**				**12,000**

Budget Impact/Other

Budget Items	FY '23	FY '24	FY '25	FY '26	FY '27	Total
5776.000: BUILDINGS & IMPROVEMENTS=>5,000		12,000				12,000
Total		**12,000**				**12,000**

City Capital Plan Equipment Replacment

FY '23 *thru* FY '27

City of Marshalltown, Iowa

Department WPCP DIVISION
Contact

Project # LAB 3700 024
Project Name INDUSTRIAL PRETREAT SOFTWARE - LAB BLDG

Type Equipment
Useful Life 10 years
Category 520520 WPCP EXP-TREATM
Priority Critical
Status Active
Total Project Cost: $5,000

Division WPC-PLANT
Object 5734.000 COMPUTER SOFTW
Location 1903700

Description

SOFTWARE USED TO MONITOR ALL THE INDUSTRIAL CONTRIBUTORS IN THE CITY AND IS USED FOR OUR FEDERAL REPORTING REQUIREMENTS. PURCHASED IN 1999 FOR $5,000.

Justification

Expenditures	FY '23	FY '24	FY '25	FY '26	FY '27	Total
Equip/Vehicles/Furnishings	5,000					5,000
Total	**5,000**					**5,000**

Funding Sources	FY '23	FY '24	FY '25	FY '26	FY '27	Total
612 - WPCP REVENUE FUND	5,000					5,000
Total	**5,000**					**5,000**

Budget Impact/Other

Budget Items	FY '23	FY '24	FY '25	FY '26	FY '27	Total
5741.000: COMPUTER SOFTWARE=>5,000	5,000					5,000
Total	**5,000**					**5,000**

City Capital Plan Equipment Replacment

FY '23 *thru* FY '27

City of Marshalltown, Iowa

Department WPCP DIVISION
Contact

Project # LAB 3700 025
Project Name SCADA WONDERWARE SOFTWARE UPGRADE- LAB BLDG

Type Equipment
Useful Life 5 years
Category 520520 WPCP EXP-TREATM
Priority Critical
Status Active

Division WPC-PLANT
Object 5734.000 COMPUTER SOFTW
Location 1903700

Total Project Cost: **$160,000**

Description

SYSTEM TO OPERATE AND LOG PLANT OPERATIONS, UPGRADED WITH Y2K SOFTWARE IN 1999. OTHER ADDITIONS IN 1998 INCLUDE: SS ANALYZER($2312), WEATHER STATION($2166), NUISANCE ALARMS($1728), 18TH AVE CONTROLS($3900). PURCHASED IN 1997 FOR $200,000. WONDERWARE VERSION 9.5 UPGRADE NEEDED IN 2008. PROPOSAL # 060926DJO01. DUE TO WONDERWARE LICENSING THAT WILL NOT ALLOW US TO PURCHASE VERSION 10 AND INSTALLING 9.5, CITY TO BUY NEW IND. PC'S IN FY2010 AND THEN BUY NEW VERSION OF WONDERWARE.

Justification

Expenditures	FY '23	FY '24	FY '25	FY '26	FY '27	Total
Equip/Vehicles/Furnishings		160,000				160,000
Total		**160,000**				**160,000**

Funding Sources	FY '23	FY '24	FY '25	FY '26	FY '27	Total
615 - WPCP IMPROVMNTS		160,000				160,000
Total		**160,000**				**160,000**

Budget Impact/Other

Budget Items	FY '23	FY '24	FY '25	FY '26	FY '27	Total
5740.000: COMPUTER EQUIPMENT =>5,000		60,000				60,000
5741.000: COMPUTER SOFTWARE=>5,000		100,000				100,000
Total		**160,000**				**160,000**

City Capital Plan Equipment Replacment

FY '23 *thru* FY '27

City of Marshalltown, Iowa

Department WPCP DIVISION
Contact

Project # LAB 3700 027
Project Name 60" LAB HOOD LAB BLDG

Type Equipment
Useful Life 20 years
Category 520520 WPCP EXP-TREATM

Division WPC-PLANT
Object 5749.000 OTHER CAPITAL EQ
Priority Less Important
Location 1903700
Status Active
Total Project Cost: **$7,000**

Description

PURCHASE 2001 FOR $7,000.

Justification

Expenditures	FY '23	FY '24	FY '25	FY '26	FY '27	Total
Equip/Vehicles/Furnishings		7,000				7,000
Total		**7,000**				**7,000**

Funding Sources	FY '23	FY '24	FY '25	FY '26	FY '27	Total
612 - WPCP REVENUE FUND		7,000				7,000
Total		**7,000**				**7,000**

Budget Impact/Other

Budget Items	FY '23	FY '24	FY '25	FY '26	FY '27	Total
5750.000: OTHER CAPITAL EQUIPMENT=>5,000		7,000				7,000
Total		**7,000**				**7,000**

City Capital Plan Equipment Replacment

FY '23 *thru* FY '27

City of Marshalltown, Iowa

Department WPCP DIVISION
Contact

Project # LAB 3700 031
Project Name KJELDAHL DISTILLATION UNIT

Type Equipment
Useful Life 25 years
Category 520520 WPCP EXP-TREATM
Priority Critical
Status Active
Total Project Cost: $20,000

Division WPC-PLANT
Object 5749.000 OTHER CAPITAL EQ
Location 1903700

Description

Kjeldahl Distillation Unit for distillng TKN

Justification

Expenditures	FY '23	FY '24	FY '25	FY '26	FY '27	Total
Equip/Vehicles/Furnishings			20,000			20,000
Total			**20,000**			**20,000**

Funding Sources	FY '23	FY '24	FY '25	FY '26	FY '27	Total
612 - WPCP REVENUE FUND			20,000			20,000
Total			**20,000**			**20,000**

Budget Impact/Other

Budget Items	FY '23	FY '24	FY '25	FY '26	FY '27	Total
5750.000: OTHER CAPITAL EQUIPMENT=>5,000			20,000			20,000
Total			**20,000**			**20,000**

City Capital Plan Equipment Replacment

FY '23 *thru* FY '27

City of Marshalltown, Iowa

Department WPCP DIVISION
Contact

Project # PCL 4900 002
Project Name REBUILD #1,2,3 PRIMARY CLARIFIER

Type Equipment
Useful Life 20 years
Category 520520 WPCP EXP-TREATM
Priority Critical
Status Active
Total Project Cost: $60,000

Division WPC-PLANT
Object 5749.000 OTHER CAPITAL EQ
Location 1904900

Description

REPLACE DRIVE CHAIN 1997-98 FLIGHTS 1991.

Rebuild #1,2,3 Primary Clarifier

Justification

Expenditures	FY '23	FY '24	FY '25	FY '26	FY '27	Total
Equip/Vehicles/Furnishings				60,000		60,000
Total				**60,000**		**60,000**

Funding Sources	FY '23	FY '24	FY '25	FY '26	FY '27	Total
612 - WPCP REVENUE FUND				60,000		60,000
Total				**60,000**		**60,000**

Budget Impact/Other

Budget Items	FY '23	FY '24	FY '25	FY '26	FY '27	Total
5750.000: OTHER CAPITAL EQUIPMENT=>5,000				60,000		60,000
Total				**60,000**		**60,000**

City Capital Plan Equipment Replacment

FY '23 *thru* FY '27

City of Marshalltown, Iowa

Department WPCP DIVISION
Contact

Project # PCL 4900 003
Project Name REPLACE PRIMARY #4-5 RETURN RAILS

Type Maintenance
Useful Life 15 years
Category 520520 WPCP EXP-TREATM
Priority Not Applicable
Status Active

Division WPC-PLANT
Object 5749.000 OTHER CAPITAL EQ
Location 1904900

Total Project Cost: **$26,000**

Description

REPLACE THE PRIMARY RETURN RAILS, ESTIMATED AT $13,000 per tank.

Justification

Expenditures	FY '23	FY '24	FY '25	FY '26	FY '27	Total
Maintenance					26,000	26,000
Total					**26,000**	**26,000**

Funding Sources	FY '23	FY '24	FY '25	FY '26	FY '27	Total
612 - WPCP REVENUE FUND					26,000	26,000
Total					**26,000**	**26,000**

Budget Impact/Other

Budget Items	FY '23	FY '24	FY '25	FY '26	FY '27	Total
5750.000: OTHER CAPITAL EQUIPMENT=>5,000					26,000	26,000
Total					**26,000**	**26,000**

City Capital Plan Equipment Replacment

FY '23 *thru* FY '27

City of Marshalltown, Iowa

Department WPCP DIVISION
Contact

Project # PCL 4900 007
Project Name REBUILD #4, 5 PRIMARY CLARIFIER

Type Equipment
Useful Life 20 years
Category 520520 WPCP EXP-TREATM

Division WPC-PLANT
Object 5749.000 OTHER CAPITAL EQ
Priority Critical
Location 1904900
Status Active
Total Project Cost: **$60,000**

Description

REPLACE DRIVE CHAIN 1997-98 FLIGHTS 1991.

Justification

Expenditures	FY '23	FY '24	FY '25	FY '26	FY '27	Total
Equip/Vehicles/Furnishings				60,000		60,000
Total				**60,000**		**60,000**

Funding Sources	FY '23	FY '24	FY '25	FY '26	FY '27	Total
612 - WPCP REVENUE FUND				60,000		60,000
Total				**60,000**		**60,000**

Budget Impact/Other

Budget Items	FY '23	FY '24	FY '25	FY '26	FY '27	Total
5750.000: OTHER CAPITAL EQUIPMENT=>5,000				60,000		60,000
Total				**60,000**		**60,000**

City Capital Plan Equipment Replacment

FY '23 *thru* FY '27

City of Marshalltown, Iowa

Department WPCP DIVISION
Contact

Project # PCL 4900 011
Project Name PRIMARY VALVE ACTUATORS (5 per/year)-PRIMARIES

Type Equipment
Useful Life 15 years
Category 520520 WPCP EXP-TREATM
Priority Critical
Status Active
Total Project Cost: **$70,000**

Division WPC-PLANT
Object 5749.000 OTHER CAPITAL EQ
Location 1904900

Description

THERE ARE TWO VALVE ACTUATORS PER PRIMARY PURCHASED SEPT. 2004. EST COST $35,000.

Justification

Expenditures	FY '23	FY '24	FY '25	FY '26	FY '27	Total
Equip/Vehicles/Furnishings	35,000					35,000
Total	**35,000**					**35,000**

Funding Sources	FY '23	FY '24	FY '25	FY '26	FY '27	Total
612 - WPCP REVENUE FUND	35,000					35,000
Total	**35,000**					**35,000**

Budget Impact/Other

Budget Items	FY '23	FY '24	FY '25	FY '26	FY '27	Total
5750.000: OTHER CAPITAL EQUIPMENT=>5,000	35,000					35,000
Total	**35,000**					**35,000**

City Capital Plan Equipment Replacment

FY '23 *thru* FY '27

City of Marshalltown, Iowa

Department WPCP DIVISION
Contact

Project # PCL 4900 013
Project Name PRIMARY CLARIFIER#1 WEIR REPLACEMENT

Type Improvement
Useful Life 40 years
Category 520520 WPCP EXP-TREATM
Priority Critical
Status Active
Total Project Cost: $40,000

Division WPC-PLANT
Object 5776.000 BUILDINGS & IMPR
Location 1904900

Description

REPLACEMENT OF PRIMARY CLARIFIER WEIRS.

Justification

Expenditures	FY '23	FY '24	FY '25	FY '26	FY '27	Total
Equip/Vehicles/Furnishings			40,000			40,000
Total			**40,000**			**40,000**

Funding Sources	FY '23	FY '24	FY '25	FY '26	FY '27	Total
612 - WPCP REVENUE FUND			40,000			40,000
Total			**40,000**			**40,000**

Budget Impact/Other

Budget Items	FY '23	FY '24	FY '25	FY '26	FY '27	Total
5776.000: BUILDINGS & IMPROVEMENTS=>5,000			40,000			40,000
Total			**40,000**			**40,000**

City Capital Plan Equipment Replacment

FY '23 *thru* FY '27

City of Marshalltown, Iowa

Department WPCP DIVISION
Contact

Project # PCL 4900 015
Project Name PRIMARY CLARIFIER #2 WEIR REPLACEMENT

Type Unassigned
Useful Life
Category 520520 WPCP EXP-TREATM

Division WPC-PLANT
Object 5776.000 BUILDINGS & IMPR
Priority Critical
Location 1904900
Status Active
Total Project Cost: **$40,000**

Description

Replace aluminum overflow weirs

Justification

Expenditures	FY '23	FY '24	FY '25	FY '26	FY '27	Total
Equip/Vehicles/Furnishings			40,000			40,000
Total			**40,000**			**40,000**

Funding Sources	FY '23	FY '24	FY '25	FY '26	FY '27	Total
612 - WPCP REVENUE FUND			40,000			40,000
Total			**40,000**			**40,000**

Budget Impact/Other

Budget Items	FY '23	FY '24	FY '25	FY '26	FY '27	Total
5776.000: BUILDINGS & IMPROVEMENTS=>5,000			40,000			40,000
Total			**40,000**			**40,000**

City Capital Plan Equipment Replacment

FY '23 *thru* FY '27

City of Marshalltown, Iowa

Department WPCP DIVISION
Contact

Project # PCL 4900 016
Project Name PRIMARY CLARIFIER #3 WEIR REPLACEMENT

Type Unassigned
Useful Life
Category 520520 WPCP EXP-TREATM

Division WPC-PLANT
Object 5776.000 BUILDINGS & IMPR
Priority Critical
Location 1904900
Status Active
Total Project Cost: **$40,000**

Description

Replace aluminum weir

Justification

Expenditures	FY '23	FY '24	FY '25	FY '26	FY '27	Total
Equip/Vehicles/Furnishings			40,000			40,000
Total			**40,000**			**40,000**

Funding Sources	FY '23	FY '24	FY '25	FY '26	FY '27	Total
612 - WPCP REVENUE FUND			40,000			40,000
Total			**40,000**			**40,000**

Budget Impact/Other

Budget Items	FY '23	FY '24	FY '25	FY '26	FY '27	Total
5776.000: BUILDINGS & IMPROVEMENTS=>5,000			40,000			40,000
Total			**40,000**			**40,000**

City Capital Plan Equipment Replacment

FY '23 *thru* FY '27

City of Marshalltown, Iowa

Department WPCP DIVISION
Contact

Project # PLM 4700 017
Project Name PUMP #4 REBUILD-PRELIM BLDG

Type Maintenance
Useful Life 10 years
Category 520520 WPCP EXP-TREATM
Priority Critical
Status Active
Total Project Cost: $25,000

Division WPC-PLANT
Object 5749.000 OTHER CAPITAL EQ
Location 1904700

Description

INSTALLED IN PEAK FLOW PROJECT 2012

Justification

Expenditures	FY '23	FY '24	FY '25	FY '26	FY '27	Total
Maintenance			25,000			25,000
Total			**25,000**			**25,000**

Funding Sources	FY '23	FY '24	FY '25	FY '26	FY '27	Total
612 - WPCP REVENUE FUND			25,000			25,000
Total			**25,000**			**25,000**

Budget Impact/Other

Budget Items	FY '23	FY '24	FY '25	FY '26	FY '27	Total
5750.000: OTHER CAPITAL EQUIPMENT=>5,000			25,000			25,000
Total			**25,000**			**25,000**

City Capital Plan Equipment Replacment

FY '23 *thru* FY '27

City of Marshalltown, Iowa

Department WPCP DIVISION
Contact

Project # PLM 4700 019
Project Name PUMP #5 REBUILD-PRELIM BLD

Type Maintenance
Useful Life 10 years
Category 520520 WPCP EXP-TREATM
Priority Critical
Status Active
Total Project Cost: $25,000

Division WPC-PLANT
Object 5749.000 OTHER CAPITAL EQ
Location 1904700

Description

INSTALLED IN PEAK FLOW PROJECT 2012

Justification

Expenditures	FY '23	FY '24	FY '25	FY '26	FY '27	Total
Maintenance			25,000			25,000
Total			**25,000**			**25,000**

Funding Sources	FY '23	FY '24	FY '25	FY '26	FY '27	Total
612 - WPCP REVENUE FUND			25,000			25,000
Total			**25,000**			**25,000**

Budget Impact/Other

Budget Items	FY '23	FY '24	FY '25	FY '26	FY '27	Total
5750.000: OTHER CAPITAL EQUIPMENT=>5,000			25,000			25,000
Total			**25,000**			**25,000**

City Capital Plan Equipment Replacment

FY '23 *thru* FY '27

City of Marshalltown, Iowa

Department WPCP DIVISION
Contact

Project # PLM 4700 021
Project Name REPLACE GRIT SNAIL BELT-PRELIM BLDG

Type Maintenance
Useful Life 8 years
Category 520520 WPCP EXP-TREATM
Priority Critical
Status Active
Total Project Cost: $11,100

Division WPC-PLANT
Object 5749.000 OTHER CAPITAL EQ
Location 1904700

Description

BELT REPLACED IN 1999. NEW BELT IS $7,020.

Justification

Expenditures	FY '23	FY '24	FY '25	FY '26	FY '27	Total
Maintenance	11,100					11,100
Total	**11,100**					**11,100**

Funding Sources	FY '23	FY '24	FY '25	FY '26	FY '27	Total
612 - WPCP REVENUE FUND	11,100					11,100
Total	**11,100**					**11,100**

Budget Impact/Other

Budget Items	FY '23	FY '24	FY '25	FY '26	FY '27	Total
5750.000: OTHER CAPITAL EQUIPMENT=>5,000	11,100					11,100
Total	**11,100**					**11,100**

City Capital Plan Equipment Replacment

FY '23 *thru* FY '27

City of Marshalltown, Iowa

Department WPCP DIVISION
Contact

Project # PLM 4700 025
Project Name VFD REPLACEMENT(4,5,)-PRELIM BLDG

Type Equipment
Useful Life 12 years
Category 520520 WPCP EXP-TREATM
Priority Critical
Status Active
Total Project Cost: $12,000

Division WPC-PLANT
Object 5749.000 OTHER CAPITAL EQ
Location 1904700

Description

PURCHASED IN 2001 FOR $6,000 EACH.

Justification

Expenditures	FY '23	FY '24	FY '25	FY '26	FY '27	Total
Equip/Vehicles/Furnishings				12,000		12,000
Total				**12,000**		**12,000**

Funding Sources	FY '23	FY '24	FY '25	FY '26	FY '27	Total
612 - WPCP REVENUE FUND				12,000		12,000
Total				**12,000**		**12,000**

Budget Impact/Other

Budget Items	FY '23	FY '24	FY '25	FY '26	FY '27	Total
5750.000: OTHER CAPITAL EQUIPMENT=>5,000				12,000		12,000
Total				**12,000**		**12,000**

City Capital Plan Equipment Replacment

FY '23 *thru* FY '27

City of Marshalltown, Iowa

Department WPCP DIVISION
Contact

Project # PLM 4700 028
Project Name VFD REPLACEMENT (1,2,3&6)-PRELIM BLDG

Type Equipment
Useful Life 10 years
Category 520520 WPCP EXP-TREATM
Priority Critical
Status Active
Total Project Cost: $24,000

Division WPC-PLANT
Object 5749.000 OTHER CAPITAL EQ
Location 1904700

Description

PURCHASED IN 1998 FOR $6,000 EACH.

Justification

Expenditures	FY '23	FY '24	FY '25	FY '26	FY '27	Total
Equip/Vehicles/Furnishings				24,000		24,000
Total				**24,000**		**24,000**

Funding Sources	FY '23	FY '24	FY '25	FY '26	FY '27	Total
612 - WPCP REVENUE FUND				24,000		24,000
Total				**24,000**		**24,000**

Budget Impact/Other

Budget Items	FY '23	FY '24	FY '25	FY '26	FY '27	Total
5750.000: OTHER CAPITAL EQUIPMENT=>5,000				24,000		24,000
Total				**24,000**		**24,000**

City Capital Plan Equipment Replacment

FY '23 *thru* FY '27

City of Marshalltown, Iowa

Department WPCP DIVISION
Contact

Project # PLM 4700 032
Project Name MAU -3 REPLACEMENT-PRELIM BLDG

Type Equipment
Useful Life 20 years
Category 520520 WPCP EXP-TREATM

Division WPC-PLANT
Object 5749.000 OTHER CAPITAL EQ
Priority Critical
Location 1904700
Status Active
Total Project Cost: **$40,000**

Description

PURCHASED SEPT. 2004 FOR $40,000.

Justification

Expenditures	FY '23	FY '24	FY '25	FY '26	FY '27	Total
Equip/Vehicles/Furnishings		40,000				40,000
Total		**40,000**				**40,000**

Funding Sources	FY '23	FY '24	FY '25	FY '26	FY '27	Total
615 - WPCP IMPROVMNTS		40,000				40,000
Total		**40,000**				**40,000**

Budget Impact/Other

Budget Items	FY '23	FY '24	FY '25	FY '26	FY '27	Total
5750.000: OTHER CAPITAL EQUIPMENT=>5,000		40,000				40,000
Total		**40,000**				**40,000**

City Capital Plan Equipment Replacment

FY '23 *thru* FY '27

City of Marshalltown, Iowa

Department WPCP DIVISION
Contact

Project # PLM 4700 034
Project Name SUPERVISORY CONTROL UPGRADE-PRELIM BLDG

Type Equipment
Useful Life 10 years
Category 520520 WPCP EXP-TREATM
Priority Critical
Status Active
Total Project Cost: $25,000

Division WPC-PLANT
Object 5749.000 OTHER CAPITAL EQ
Location 1904700

Description

PURCHASED SEPT. 2004 FOR $15,000.

Justification

Expenditures	FY '23	FY '24	FY '25	FY '26	FY '27	Total
Equip/Vehicles/Furnishings		25,000				25,000
Total		**25,000**				**25,000**

Funding Sources	FY '23	FY '24	FY '25	FY '26	FY '27	Total
615 - WPCP IMPROVMNTS		25,000				25,000
Total		**25,000**				**25,000**

Budget Impact/Other

Budget Items	FY '23	FY '24	FY '25	FY '26	FY '27	Total
5750.000: OTHER CAPITAL EQUIPMENT=>5,000		25,000				25,000
Total		**25,000**				**25,000**

City Capital Plan Equipment Replacment

FY '23 *thru* FY '27

City of Marshalltown, Iowa

Department WPCP DIVISION
Contact

Project # PLM 4700 036
Project Name VERT TURBINE PUMP #1,#2,#3,#6 REBUILD-PRELIM BLDG

Type Maintenance
Useful Life 10 years
Category 520520 WPCP EXP-TREATM
Priority Critical
Status Active

Division WPC-PLANT
Object 5749.000 OTHER CAPITAL EQ
Location 1904700

Total Project Cost: **$60,000**

Description

INSTALLED SEPT. 2004. EST. REBUILD COST $15,000.

Justification

Expenditures	FY '23	FY '24	FY '25	FY '26	FY '27	Total
Maintenance		60,000				60,000
Total		**60,000**				**60,000**

Funding Sources	FY '23	FY '24	FY '25	FY '26	FY '27	Total
612 - WPCP REVENUE FUND		60,000				60,000
Total		**60,000**				**60,000**

Budget Impact/Other

Budget Items	FY '23	FY '24	FY '25	FY '26	FY '27	Total
5750.000: OTHER CAPITAL EQUIPMENT=>5,000		60,000				60,000
Total		**60,000**				**60,000**

City Capital Plan Equipment Replacment

FY '23 *thru* FY '27

City of Marshalltown, Iowa

Department WPCP DIVISION
Contact

Project # PLM 4700 037
Project Name VERTICAL TURBINE PUMP#2 REPLAC-PRELIM BLDG

Type Equipment
Useful Life 20 years
Category 520520 WPCP EXP-TREATM
Priority Critical
Status Active
Total Project Cost: **$50,000**

Division WPC-PLANT
Object 5749.000 OTHER CAPITAL EQ
Location 1904700

Description

PURCHASED SEPT. 2004 FOR $50,000.

Justification

Expenditures	FY '23	FY '24	FY '25	FY '26	FY '27	Total
Equip/Vehicles/Furnishings					50,000	50,000
Total					**50,000**	**50,000**

Funding Sources	FY '23	FY '24	FY '25	FY '26	FY '27	Total
612 - WPCP REVENUE FUND					50,000	50,000
Total					**50,000**	**50,000**

Budget Impact/Other

Budget Items	FY '23	FY '24	FY '25	FY '26	FY '27	Total
5750.000: OTHER CAPITAL EQUIPMENT=>5,000					50,000	50,000
Total					**50,000**	**50,000**

City Capital Plan Equipment Replacment

FY '23 *thru* FY '27

City of Marshalltown, Iowa

Department WPCP DIVISION
Contact

Project # PLM 4700 039
Project Name VERTICAL TURBINE PUMP #3 REPLA-PRELIM BLDG

Type Equipment
Useful Life 20 years
Category 520520 WPCP EXP-TREATM
Priority Critical
Status Active
Total Project Cost: **$50,000**

Division WPC-PLANT
Object 5749.000 OTHER CAPITAL EQ
Location 1904700

Description

PURCHASED SEPT. 2004 FOR $50,000.

Justification

Expenditures	FY '23	FY '24	FY '25	FY '26	FY '27	Total
Equip/Vehicles/Furnishings					50,000	50,000
Total					**50,000**	**50,000**

Funding Sources	FY '23	FY '24	FY '25	FY '26	FY '27	Total
612 - WPCP REVENUE FUND					50,000	50,000
Total					**50,000**	**50,000**

Budget Impact/Other

Budget Items	FY '23	FY '24	FY '25	FY '26	FY '27	Total
5750.000: OTHER CAPITAL EQUIPMENT=>5,000					50,000	50,000
Total					**50,000**	**50,000**

City Capital Plan Equipment Replacment

FY '23 *thru* FY '27

City of Marshalltown, Iowa

Department WPCP DIVISION
Contact

Project # PLM 4700 041
Project Name VERTICAL TURBINE PUMP #6 REPLA-PRELIM BLDG

Type Equipment
Useful Life 20 years
Category 520520 WPCP EXP-TREATM
Priority Critical
Status Active
Total Project Cost: **$50,000**

Division WPC-PLANT
Object 5749.000 OTHER CAPITAL EQ
Location 1904700

Description

PURCHASED IN SEPT. 2004 FOR $50,000.

Justification

Expenditures	FY '23	FY '24	FY '25	FY '26	FY '27	Total
Equip/Vehicles/Furnishings					50,000	50,000
Total					**50,000**	**50,000**

Funding Sources	FY '23	FY '24	FY '25	FY '26	FY '27	Total
612 - WPCP REVENUE FUND					50,000	50,000
Total					**50,000**	**50,000**

Budget Impact/Other

Budget Items	FY '23	FY '24	FY '25	FY '26	FY '27	Total
5750.000: OTHER CAPITAL EQUIPMENT=>5,000					50,000	50,000
Total					**50,000**	**50,000**

City Capital Plan Equipment Replacment

FY '23 *thru* FY '27

City of Marshalltown, Iowa

Department WPCP DIVISION
Contact

Project # PLM 4700 051
Project Name PRELIM VALVE ACTUATOR TO FEB

Type Equipment
Useful Life 15 years
Category 520520 WPCP EXP-TREATM
Priority Critical
Status Active

Division WPC-PLANT
Object 5749.000 OTHER CAPITAL EQ
Location 1904700

Total Project Cost: **$10,000**

Description

SAFETY ISSUE- VALVE ACTUATOR ON THE VALVE THAT CONTROLS THE FLOW OF WASTEWATER FROM #6 PUMP TO PLANT OF FEB. Valve cost is $6300 + cost to wire and install ($3700) Total $10,000

Justification

Expenditures	FY '23	FY '24	FY '25	FY '26	FY '27	Total
Equip/Vehicles/Furnishings			10,000			10,000
Total			**10,000**			**10,000**

Funding Sources	FY '23	FY '24	FY '25	FY '26	FY '27	Total
612 - WPCP REVENUE FUND			10,000			10,000
Total			**10,000**			**10,000**

Budget Impact/Other

Budget Items	FY '23	FY '24	FY '25	FY '26	FY '27	Total
5750.000: OTHER CAPITAL EQUIPMENT=>5,000			10,000			10,000
Total			**10,000**			**10,000**

City Capital Plan Equipment Replacment

FY '23 *thru* FY '27

City of Marshalltown, Iowa

Department WPCP DIVISION
Contact Heather Thomas

Project # PLM 4700 067
Project Name HEADWORKS EQUIP REPL PROJECT

Type Equipment
Useful Life 25 years
Category 520520 WPCP EXP-TREATM

Division WPC-PLANT
Object 5749.000 OTHER CAPITAL EQ
Priority Critical
Location 1904700
Status Active
Total Project Cost: **$10,075,950**

Description

Headworks Equipment Replacement Project - includes replacement of screening/grit equipment; rehab of Digesters 1 & 3; rehab of final clarifiers 1 & 2; and improvements to dewatering & SCADA systems.

Justification

This is necessary to address a number of issues with the 1980's equiment currently in place.

Expenditures	FY '23	FY '24	FY '25	FY '26	FY '27	Total
Construction	2,681,700	3,575,600	2,905,175	223,475		9,385,950
Legal / Admin Fees	15,000					15,000
Construction Engineering	198,500	222,500	190,500	63,500		675,000
Total	**2,895,200**	**3,798,100**	**3,095,675**	**286,975**		**10,075,950**

Funding Sources	FY '23	FY '24	FY '25	FY '26	FY '27	Total
615 - WPCP IMPROVMNTS	2,895,200	3,798,100	3,095,675	286,975		10,075,950
Total	**2,895,200**	**3,798,100**	**3,095,675**	**286,975**		**10,075,950**

Budget Impact/Other

The dollar figures shown within Plan-It are for expected project expenses AFTER planning and design were completed. $528,840 in Fox Engineering design costs & $8,490.12 in ABE geotech work were funded with sewer enterprise funds on hand.

These expenses include the following and total: $10,348,450, less city purchased software (separate Plan-It Items) = $10,075,950
$15,000.00 Admin
$635,000.00 Const Engineer - Fox Strand
$40,000.00 Special Testing (estimate)
$8,939,000.00 Construction
$446,950.00 Contingency
$272,500.00 City Purchased Software

The revenue will be a combination of cash on hand and a SRF revenue bond. The $13,125M SRF revenue bond is funding a portion of both this project and the Sanitary Sewer CIPP project.

Home Fund 615.

Budget Items	FY '23	FY '24	FY '25	FY '26	FY '27	Total
5233.000: ENGINEERING	198,500	222,500	190,500	63,500		675,000
5342.000: CONTRACT-OUTSIDE HELP	2,696,700	3,575,600	2,905,175	223,475		9,400,950
Total	**2,895,200**	**3,798,100**	**3,095,675**	**286,975**		**10,075,950**

City Capital Plan Equipment Replacment

FY '23 *thru* FY '27

City of Marshalltown, Iowa

Department WPCP DIVISION
Contact

Project # PLT 4500 001
Project Name PLANT SECURITY-PLANT

Type Equipment
Useful Life 15 years
Category 520520 WPCP EXP-TREATM
Priority Critical
Status Active

Division WPC-PLANT
Object 5749.000 OTHER CAPITAL EQ
Location 1904500

Total Project Cost: **$50,000**

Description

POWERED ENTRY GATE FOR SECURITY & VIDEO CAMERAS (removed from budget in fy 2006 & fy2007 by City Administrator) EST COST AT $40,000.

Justification

Expenditures	FY '23	FY '24	FY '25	FY '26	FY '27	Total
Equip/Vehicles/Furnishings					50,000	50,000
Total					**50,000**	**50,000**

Funding Sources	FY '23	FY '24	FY '25	FY '26	FY '27	Total
612 - WPCP REVENUE FUND					50,000	50,000
Total					**50,000**	**50,000**

Budget Impact/Other

Budget Items	FY '23	FY '24	FY '25	FY '26	FY '27	Total
5750.000: OTHER CAPITAL EQUIPMENT=>5,000					50,000	50,000
Total					**50,000**	**50,000**

City Capital Plan Equipment Replacment

FY '23 *thru* FY '27

City of Marshalltown, Iowa

Department WPCP DIVISION
Contact

Project # PLT 4500 005
Project Name VALVE EXERCISER-PLANT

Type Equipment
Useful Life 15 years
Category 520520 WPCP EXP-TREATM

Division WPC-PLANT
Object 5749.000 OTHER CAPITAL EQ
Priority Critical
Location 1904500
Status Active
Total Project Cost: **$8,000**

Description

ELECTRIC POWERED WRENCH TO EXERCISE VALVES. EST COST $8,000.

Justification

Expenditures	FY '23	FY '24	FY '25	FY '26	FY '27	Total
Equip/Vehicles/Furnishings		8,000				8,000
Total		**8,000**				**8,000**

Funding Sources	FY '23	FY '24	FY '25	FY '26	FY '27	Total
612 - WPCP REVENUE FUND		8,000				8,000
Total		**8,000**				**8,000**

Budget Impact/Other

Budget Items	FY '23	FY '24	FY '25	FY '26	FY '27	Total
5750.000: OTHER CAPITAL EQUIPMENT=>5,000		8,000				8,000
Total		**8,000**				**8,000**

City Capital Plan Equipment Replacment

FY '23 *thru* FY '27

City of Marshalltown, Iowa

Department WPCP DIVISION
Contact

Project # PLT 4500 012
Project Name INDUSTRIAL PC REPLACEMENT-ALL

Type Equipment
Useful Life 10 years
Category 520520 WPCP EXP-TREATM

Division WPC-PLANT
Object 5749.000 OTHER CAPITAL EQ
Priority Critical
Location 1904500
Status Active
Total Project Cost: **$100,000**

Description

REPLACEMENT OF INDUSTRIAL PC IN EACH MCC LOCATION (7). PLUS 3 STANDARD CONPUTERS.

Justification

Expenditures	FY '23	FY '24	FY '25	FY '26	FY '27	Total
Equip/Vehicles/Furnishings		100,000				100,000
Total		**100,000**				**100,000**

Funding Sources	FY '23	FY '24	FY '25	FY '26	FY '27	Total
615 - WPCP IMPROVMNTS		100,000				100,000
Total		**100,000**				**100,000**

Budget Impact/Other

Budget Items	FY '23	FY '24	FY '25	FY '26	FY '27	Total
5750.000: OTHER CAPITAL EQUIPMENT=>5,000		100,000				100,000
Total		**100,000**				**100,000**

City Capital Plan Equipment Replacment

FY '23 *thru* FY '27

City of Marshalltown, Iowa

Department WPCP DIVISION
Contact

Project # PLT 4500 018
Project Name RIVER GAUGE STATION-TELEMETRY

Type Equipment
Useful Life 10 years
Category 520520 WPCP EXP-TREATM

Division WPC-PLANT
Object 5749.000 OTHER CAPITAL EQ
Priority Critical
Location 1904500
Status Active
Total Project Cost: **$9,000**

Description

RADIO TELEMETRY FROM RIVER GAUGE STATION TO PLANT SCADA SYSTEM. CONTROLS EFFLUENT GATE AND STORM WATER STATION. INSTALLED IN 2009

Justification

Expenditures	FY '23	FY '24	FY '25	FY '26	FY '27	Total
Equip/Vehicles/Furnishings	9,000					9,000
Total	**9,000**					**9,000**

Funding Sources	FY '23	FY '24	FY '25	FY '26	FY '27	Total
612 - WPCP REVENUE FUND	9,000					9,000
Total	**9,000**					**9,000**

Budget Impact/Other

Budget Items	FY '23	FY '24	FY '25	FY '26	FY '27	Total
5750.000: OTHER CAPITAL EQUIPMENT=>5,000	9,000					9,000
Total	**9,000**					**9,000**

City Capital Plan Equipment Replacment

FY '23 *thru* FY '27

City of Marshalltown, Iowa

Department WPCP DIVISION
Contact

Project # PLT 4500 020
Project Name JBS LAGOON-TELEMETRY

Type Equipment
Useful Life 10 years
Category 520520 WPCP EXP-TREATM

Division WPC-PLANT
Object 5749.000 OTHER CAPITAL EQ
Priority Critical
Location 1904500
Status Active
Total Project Cost: **$15,000**

Description

RADIO TELEMETRY UPGRAGE TO NEW FCC REQUIREMENTS

Justification

Expenditures	FY '23	FY '24	FY '25	FY '26	FY '27	Total
Equip/Vehicles/Furnishings				15,000		15,000
Total				**15,000**		**15,000**

Funding Sources	FY '23	FY '24	FY '25	FY '26	FY '27	Total
612 - WPCP REVENUE FUND				15,000		15,000
Total				**15,000**		**15,000**

Budget Impact/Other

Budget Items	FY '23	FY '24	FY '25	FY '26	FY '27	Total
5750.000: OTHER CAPITAL EQUIPMENT=>5,000				15,000		15,000
Total				**15,000**		**15,000**

City Capital Plan Equipment Replacment

FY '23 *thru* FY '27

City of Marshalltown, Iowa

Department WPCP DIVISION
Contact

Project # PLT 4500 021
Project Name MCC ELECTRICAL MAINTENANCE-PLANT

Type Maintenance
Useful Life 5 years
Category 520520 WPCP EXP-TREATM
Priority Critical
Status Active

Division WPC-PLANT
Object 5749.000 OTHER CAPITAL EQ
Location 1901100

Total Project Cost: **$210,000**

Description

CONTRACT ELECTRICAL SERVICES TO INSPECT AND MAINTAIN ALL MOTOR CONTROL CENTERS AT THE PLANT

Justification

Expenditures	FY '23	FY '24	FY '25	FY '26	FY '27	Total
Maintenance	30,000	20,000	20,000	20,000	20,000	110,000
Total	**30,000**	**20,000**	**20,000**	**20,000**	**20,000**	**110,000**

Funding Sources	FY '23	FY '24	FY '25	FY '26	FY '27	Total
612 - WPCP REVENUE FUND	30,000	20,000	20,000	20,000	20,000	110,000
Total	**30,000**	**20,000**	**20,000**	**20,000**	**20,000**	**110,000**

Budget Impact/Other

Budget Items	FY '23	FY '24	FY '25	FY '26	FY '27	Total
5750.000: OTHER CAPITAL EQUIPMENT=>5,000	30,000	20,000	20,000	20,000	20,000	110,000
Total	**30,000**	**20,000**	**20,000**	**20,000**	**20,000**	**110,000**

City Capital Plan Equipment Replacment

FY '23 *thru* FY '27

City of Marshalltown, Iowa

Department WPCP DIVISION
Contact

Project # PLT 4500 151
Project Name CAPACITOR BANK PROJ

Type Equipment
Useful Life 25 years
Category 520520 WPCP EXP-TREATM
Priority Critical
Status Active

Division WPC-PLANT
Object 5749.000 OTHER CAPITAL EQ
Location 1904500

Total Project Cost: **$85,000**

Description

Capacitor Bank installation, in conjunction with Alliant Energy Transformer Upgrade

Justification

Expenditures	FY '23	FY '24	FY '25	FY '26	FY '27	Total
Equip/Vehicles/Furnishings	85,000					85,000
Total	**85,000**					**85,000**

Funding Sources	FY '23	FY '24	FY '25	FY '26	FY '27	Total
612 - WPCP REVENUE FUND	85,000					85,000
Total	**85,000**					**85,000**

Budget Impact/Other

Budget Items	FY '23	FY '24	FY '25	FY '26	FY '27	Total
5750.000: OTHER CAPITAL EQUIPMENT=>5,000	85,000					85,000
Total	**85,000**					**85,000**

City Capital Plan Equipment Replacment

FY '23 *thru* FY '27

City of Marshalltown, Iowa

Department WPCP DIVISION
Contact

Project # SBB 1100 001
Project Name RE-ROOF BUILDING-SBR BLDG

Type Maintenance
Useful Life 15 years
Category 520520 WPCP EXP-TREATM
Priority Critical
Status Active
Total Project Cost: $9,131

Division WPC-PLANT
Object 5410.000 REPAIRS/MAINT
Location 1901100

Description

INSTALLED IN 1991 FOR $8,000. REROOFEDIN 12-2009.

Justification

Expenditures	FY '23	FY '24	FY '25	FY '26	FY '27	Total
Maintenance				9,131		9,131
Total				**9,131**		**9,131**

Funding Sources	FY '23	FY '24	FY '25	FY '26	FY '27	Total
612 - WPCP REVENUE FUND				9,131		9,131
Total				**9,131**		**9,131**

Budget Impact/Other

Budget Items	FY '23	FY '24	FY '25	FY '26	FY '27	Total
5410.000: REPAIRS / MAINTENANCE				9,131		9,131
Total				**9,131**		**9,131**

City Capital Plan Equipment Replacment

FY '23 *thru* FY '27

City of Marshalltown, Iowa

Department WPCP DIVISION
Contact

Project # SBB 1100 012
Project Name RAW PUMP #2 REPLACEMENT-SBR BLDG

Type Equipment
Useful Life 20 years
Category 520520 WPCP EXP-TREATM
Priority Critical
Status Active
Total Project Cost: **$25,000**

Division WPC-PLANT
Object 5749.000 OTHER CAPITAL EQ
Location 1901100

Description

PURCHASED IN 1991 FOR $10,000.

Justification

Expenditures	FY '23	FY '24	FY '25	FY '26	FY '27	Total
Equip/Vehicles/Furnishings				25,000		25,000
Total				**25,000**		**25,000**

Funding Sources	FY '23	FY '24	FY '25	FY '26	FY '27	Total
612 - WPCP REVENUE FUND				25,000		25,000
Total				**25,000**		**25,000**

Budget Impact/Other

Budget Items	FY '23	FY '24	FY '25	FY '26	FY '27	Total
5750.000: OTHER CAPITAL EQUIPMENT=>5,000				25,000		25,000
Total				**25,000**		**25,000**

City Capital Plan Equipment Replacment

FY '23 *thru* FY '27

City of Marshalltown, Iowa

Department WPCP DIVISION
Contact

Project # SBB 1100 018
Project Name EFFLUENT WATER STRAINER-SBR BLDG

Type Equipment
Useful Life 15 years
Category 520520 WPCP EXP-TREATM

Division WPC-PLANT
Object 5749.000 OTHER CAPITAL EQ
Priority Critical
Location 1901100
Status Active
Total Project Cost: $0

Description

NOT IN USE AT THIS TIME. PURCHASED IN 1991

Justification

Expenditures	FY '23	FY '24	FY '25	FY '26	FY '27	Total
Equip/Vehicles/Furnishings				0		0
Total				**0**		**0**

Funding Sources	FY '23	FY '24	FY '25	FY '26	FY '27	Total
612 - WPCP REVENUE FUND				0		0
Total				**0**		**0**

Budget Impact/Other

Budget Items	FY '23	FY '24	FY '25	FY '26	FY '27	Total
5750.000: OTHER CAPITAL EQUIPMENT=>5,000				0		0
Total				**0**		**0**

City Capital Plan Equipment Replacment

FY '23 *thru* FY '27

City of Marshalltown, Iowa

Department WPCP DIVISION
Contact

Project # SBB 1100 021
Project Name GAS MONITOR-SBR BLDG

Type Equipment
Useful Life 15 years
Category 520520 WPCP EXP-TREATM

Division WPC-PLANT
Object 5749.000 OTHER CAPITAL EQ
Priority Critical
Location 1901100
Status Active
Total Project Cost: **$6,000**

Description

INSTALLED IN 1991. RESEARCH IF WE NEED A CHLORINE MONITOR AS WELL

Justification

Expenditures	FY '23	FY '24	FY '25	FY '26	FY '27	Total
Equip/Vehicles/Furnishings			6,000			6,000
Total			**6,000**			**6,000**

Funding Sources	FY '23	FY '24	FY '25	FY '26	FY '27	Total
612 - WPCP REVENUE FUND			6,000			6,000
Total			**6,000**			**6,000**

Budget Impact/Other

Budget Items	FY '23	FY '24	FY '25	FY '26	FY '27	Total
5750.000: OTHER CAPITAL EQUIPMENT=>5,000			6,000			6,000
Total			**6,000**			**6,000**

City Capital Plan Equipment Replacment

FY '23 *thru* FY '27

City of Marshalltown, Iowa

Department WPCP DIVISION
Contact

Project # SBB 1100 023
Project Name SUPERVISORY CONTROLS/COMPUTER-SBR BLDG

Type Equipment
Useful Life 10 years
Category 520520 WPCP EXP-TREATM
Priority Critical
Status Active
Total Project Cost: $20,000

Division WPC-PLANT
Object 5749.000 OTHER CAPITAL EQ
Location 1901100

Description

NEW PLC AND COMPUTER IN 2002. COST IS $20,000.

Justification

Expenditures	FY '23	FY '24	FY '25	FY '26	FY '27	Total
Equip/Vehicles/Furnishings	20,000					20,000
Total	**20,000**					**20,000**

Funding Sources	FY '23	FY '24	FY '25	FY '26	FY '27	Total
612 - WPCP REVENUE FUND	20,000					20,000
Total	**20,000**					**20,000**

Budget Impact/Other

Budget Items	FY '23	FY '24	FY '25	FY '26	FY '27	Total
5750.000: OTHER CAPITAL EQUIPMENT=>5,000	20,000					20,000
Total	**20,000**					**20,000**

City Capital Plan Equipment Replacment

FY '23 *thru* FY '27

City of Marshalltown, Iowa

Department WPCP DIVISION
Contact

Project # SBB 1100 031
Project Name SBR Blowe-SBR BLDG

Type Equipment
Useful Life 15 years
Category 520520 WPCP EXP-TREATM

Division WPC-PLANT
Object 5749.000 OTHER CAPITAL EQ
Priority Critical
Location 1901100
Status Active
Total Project Cost: **$100,000**

Description

BLOWER C-Standby-Blower COST: $25000 PURCHASE DATE: 11/22/1991 SERIAL NUMBER: 90/121/2177

Justification

Expenditures	FY '23	FY '24	FY '25	FY '26	FY '27	Total
Equip/Vehicles/Furnishings		50,000				50,000
Total		**50,000**				**50,000**

Funding Sources	FY '23	FY '24	FY '25	FY '26	FY '27	Total
612 - WPCP REVENUE FUND		50,000				50,000
Total		**50,000**				**50,000**

Budget Impact/Other

Budget Items	FY '23	FY '24	FY '25	FY '26	FY '27	Total
5750.000: OTHER CAPITAL EQUIPMENT=>5,000		50,000				50,000
Total		**50,000**				**50,000**

City Capital Plan Equipment Replacment

FY '23 *thru* FY '27

City of Marshalltown, Iowa

Department WPCP DIVISION
Contact

Project # SBR 5500 002
Project Name REPLACE SBR MIXER #1-SBR TANK#1

Type Equipment
Useful Life 20 years
Category 520520 WPCP EXP-TREATM

Division WPC-PLANT
Object 5749.000 OTHER CAPITAL EQ
Priority Critical
Location 1905500
Status Active
Total Project Cost: **$25,000**

Description

PURCHASED IN 1992 FOR $25,000.

Justification

Expenditures	FY '23	FY '24	FY '25	FY '26	FY '27	Total
Equip/Vehicles/Furnishings	25,000					25,000
Total	**25,000**					**25,000**

Funding Sources	FY '23	FY '24	FY '25	FY '26	FY '27	Total
612 - WPCP REVENUE FUND	25,000					25,000
Total	**25,000**					**25,000**

Budget Impact/Other

Budget Items	FY '23	FY '24	FY '25	FY '26	FY '27	Total
5750.000: OTHER CAPITAL EQUIPMENT=>5,000	25,000					25,000
Total	**25,000**					**25,000**

City Capital Plan Equipment Replacment

FY '23 *thru* FY '27

City of Marshalltown, Iowa

Department WPCP DIVISION
Contact

Project # SBR 5500 006
Project Name REPLACE SBR DECANTOR #1-SBR TANK #1

Type Equipment
Useful Life 20 years
Category 520520 WPCP EXP-TREATM
Priority Critical
Status Active
Total Project Cost: $38,000

Division WPC-PLANT
Object 5749.000 OTHER CAPITAL EQ
Location 1905500

Description

PURCHASED IN 1992 FOR $38,000.

Justification

Expenditures	FY '23	FY '24	FY '25	FY '26	FY '27	Total
Equip/Vehicles/Furnishings		38,000				38,000
Total		**38,000**				**38,000**

Funding Sources	FY '23	FY '24	FY '25	FY '26	FY '27	Total
612 - WPCP REVENUE FUND		38,000				38,000
Total		**38,000**				**38,000**

Budget Impact/Other

Budget Items	FY '23	FY '24	FY '25	FY '26	FY '27	Total
5750.000: OTHER CAPITAL EQUIPMENT=>5,000		38,000				38,000
Total		**38,000**				**38,000**

City Capital Plan Equipment Replacment

FY '23 *thru* FY '27

City of Marshalltown, Iowa

Department WPCP DIVISION
Contact

Project # SBR 5500 007
Project Name REPLACE SBR DECANTOR #2-SBR TANK #2

Type Equipment
Useful Life 20 years
Category 520520 WPCP EXP-TREATM
Priority Critical
Status Active
Total Project Cost: $38,000

Division WPC-PLANT
Object 5749.000 OTHER CAPITAL EQ
Location 1905500

Description

PURCHASED IN 1992 FOR $38,000

Justification

Expenditures	FY '23	FY '24	FY '25	FY '26	FY '27	Total
Equip/Vehicles/Furnishings		38,000				38,000
Total		**38,000**				**38,000**

Funding Sources	FY '23	FY '24	FY '25	FY '26	FY '27	Total
612 - WPCP REVENUE FUND		38,000				38,000
Total		**38,000**				**38,000**

Budget Impact/Other

Budget Items	FY '23	FY '24	FY '25	FY '26	FY '27	Total
5750.000: OTHER CAPITAL EQUIPMENT=>5,000		38,000				38,000
Total		**38,000**				**38,000**

City Capital Plan Equipment Replacment

FY '23 *thru* FY '27

City of Marshalltown, Iowa

Department WPCP DIVISION
Contact

Project # SBR 5500 035
Project Name SBR AERATION SYSTEM REPLACEMENT

Type Equipment
Useful Life 30 years
Category 520520 WPCP EXP-TREATM

Division WPC-PLANT
Object 5749.000 OTHER CAPITAL EQ
Priority Critical
Location 1905500
Status Active
Total Project Cost: **$200,000**

Description

Replacement of original constructed aeration grid from 1989.

Justification

Expenditures	FY '23	FY '24	FY '25	FY '26	FY '27	Total
Equip/Vehicles/Furnishings			200,000			200,000
Total			**200,000**			**200,000**

Funding Sources	FY '23	FY '24	FY '25	FY '26	FY '27	Total
612 - WPCP REVENUE FUND			200,000			200,000
Total			**200,000**			**200,000**

City Capital Plan Equipment Replacment

FY '23 *thru* FY '27

City of Marshalltown, Iowa

Department WPCP DIVISION
Contact

Project # SBR 5500 060
Project Name MCC J&K REPLACEMENT - SBR

Type Equipment
Useful Life 30 years
Category 520520 WPCP EXP-TREATM
Priority Critical
Status Active
Total Project Cost: $200,000

Division WPC-PLANT
Object 5749.000 OTHER CAPITAL EQ
Location 1905500

Description

MCC J&K REPLACEMENT - SBR

Justification

Expenditures	FY '23	FY '24	FY '25	FY '26	FY '27	Total
Equip/Vehicles/Furnishings			100,000	100,000		200,000
Total			**100,000**	**100,000**		**200,000**

Funding Sources	FY '23	FY '24	FY '25	FY '26	FY '27	Total
612 - WPCP REVENUE FUND			100,000	100,000		200,000
Total			**100,000**	**100,000**		**200,000**

Budget Impact/Other

Budget Items	FY '23	FY '24	FY '25	FY '26	FY '27	Total
5750.000: OTHER CAPITAL EQUIPMENT=>5,000			100,000	100,000		200,000
Total			**100,000**	**100,000**		**200,000**

City Capital Plan Equipment Replacment

FY '23 *thru* FY '27

City of Marshalltown, Iowa

Department WPCP DIVISION
Contact

Project # SCB 5300 010
Project Name WASTING PUMP #1 REPLACEMENT-SECONDARY CONTR B

Type Equipment
Useful Life 20 years
Category 520520 WPCP EXP-TREATM

Division WPC-PLANT
Object 5749.000 OTHER CAPITAL EQ
Priority Critical
Location 1905300
Status Active
Total Project Cost: **$5,700**

Description

REPLACED IN 2004 FOR $5,700.

Justification

Expenditures	FY '23	FY '24	FY '25	FY '26	FY '27	Total
Equip/Vehicles/Furnishings		5,700				5,700
Total		**5,700**				**5,700**

Funding Sources	FY '23	FY '24	FY '25	FY '26	FY '27	Total
612 - WPCP REVENUE FUND		5,700				5,700
Total		**5,700**				**5,700**

Budget Impact/Other

City Capital Plan Equipment Replacment

FY '23 *thru* FY '27

City of Marshalltown, Iowa

Department WPCP DIVISION
Contact

Project # SCB 5300 012
Project Name WASTING PUMP #2 REPLACEMENT-SECONDARY CONTR B

Type Equipment
Useful Life 20 years
Category 520520 WPCP EXP-TREATM

Division WPC-PLANT
Object 5749.000 OTHER CAPITAL EQ
Priority Critical
Location 1905300
Status Active
Total Project Cost: **$5,700**

Description

PURCHASED IN 2004 FOR $5,700.

Justification

Expenditures	FY '23	FY '24	FY '25	FY '26	FY '27	Total
Equip/Vehicles/Furnishings		5,700				5,700
Total		**5,700**				**5,700**

Funding Sources	FY '23	FY '24	FY '25	FY '26	FY '27	Total
612 - WPCP REVENUE FUND		5,700				5,700
Total		**5,700**				**5,700**

Budget Impact/Other

Budget Items	FY '23	FY '24	FY '25	FY '26	FY '27	Total
5750.000: OTHER CAPITAL EQUIPMENT=>5,000		5,700				5,700
Total		**5,700**				**5,700**

City Capital Plan Equipment Replacment

FY '23 *thru* FY '27

City of Marshalltown, Iowa

Department WPCP DIVISION
Contact

Project # SCB 5300 023
Project Name JET PUMP #1A,#2A,#3A VFD-SECONDARY CONTR BLDG

Type Equipment
Useful Life 12 years
Category 520520 WPCP EXP-TREATM
Priority Critical
Status Active
Total Project Cost: $36,000

Division WPC-PLANT
Object 5749.000 OTHER CAPITAL EQ
Location 1905300

Description

Justification

Drive taken from Prelim pumps. Is used

Expenditures	FY '23	FY '24	FY '25	FY '26	FY '27	Total
Equip/Vehicles/Furnishings				36,000		36,000
Total				**36,000**		**36,000**

Funding Sources	FY '23	FY '24	FY '25	FY '26	FY '27	Total
612 - WPCP REVENUE FUND				36,000		36,000
Total				**36,000**		**36,000**

Budget Impact/Other

Budget Items	FY '23	FY '24	FY '25	FY '26	FY '27	Total
5750.000: OTHER CAPITAL EQUIPMENT=>5,000				36,000		36,000
Total				**36,000**		**36,000**

City Capital Plan Equipment Replacment

FY '23 *thru* FY '27

City of Marshalltown, Iowa

Department WPCP DIVISION
Contact

Project # SCB 5300 024
Project Name JET PUMP #1B VFD-SECONDARY CONTR BLDG

Type Equipment
Useful Life 15 years
Category 520520 WPCP EXP-TREATM
Priority Critical
Status Active

Division WPC-PLANT
Object 5749.000 OTHER CAPITAL EQ
Location 1905300

Total Project Cost: **$12,000**

Description

Used from Prelim pumps

Justification

Expenditures	FY '23	FY '24	FY '25	FY '26	FY '27	Total
Equip/Vehicles/Furnishings		12,000				12,000
Total		**12,000**				**12,000**

Funding Sources	FY '23	FY '24	FY '25	FY '26	FY '27	Total
612 - WPCP REVENUE FUND		12,000				12,000
Total		**12,000**				**12,000**

Budget Impact/Other

Budget Items	FY '23	FY '24	FY '25	FY '26	FY '27	Total
5750.000: OTHER CAPITAL EQUIPMENT=>5,000		12,000				12,000
Total		**12,000**				**12,000**

City Capital Plan Equipment Replacment

FY '23 *thru* FY '27

City of Marshalltown, Iowa

Department WPCP DIVISION
Contact

Project # SCB 5300 032
Project Name SUPERVISORY CONTROL UPGRADE-SECONDARY CONTR

Type Equipment
Useful Life 10 years
Category 520520 WPCP EXP-TREATM
Priority Critical
Status Active
Total Project Cost: $15,000

Division WPC-PLANT
Object 5749.000 OTHER CAPITAL EQ
Location 1905300

Description

PURCHASED IN 2004 FOR $15,000.

Justification

Expenditures	FY '23	FY '24	FY '25	FY '26	FY '27	Total
Equip/Vehicles/Furnishings		15,000				15,000
Total		**15,000**				**15,000**

Funding Sources	FY '23	FY '24	FY '25	FY '26	FY '27	Total
615 - WPCP IMPROVMNTS		15,000				15,000
Total		**15,000**				**15,000**

Budget Impact/Other

Budget Items	FY '23	FY '24	FY '25	FY '26	FY '27	Total
5750.000: OTHER CAPITAL EQUIPMENT=>5,000		15,000				15,000
Total		**15,000**				**15,000**

City Capital Plan Equipment Replacment

FY '23 *thru* FY '27

City of Marshalltown, Iowa

Department WPCP DIVISION
Contact

Project # SCB 5300 033
Project Name INDUSTRIAL PC UPGRADE-SECONDARY CONTR BLDG

Type Equipment
Useful Life 10 years
Category 520520 WPCP EXP-TREATM
Priority Not Applicable
Status Active

Division WPC-PLANT
Object 5749.000 OTHER CAPITAL EQ
Location 1905300

Total Project Cost: **$12,500**

Description

UPGRADE THE COMPUTER AND MONITOR FOR THE SECONDARY CONTROL BUILDING. PROPOSAL 060303DJO02 REV.1

Justification

Expenditures	FY '23	FY '24	FY '25	FY '26	FY '27	Total
Equip/Vehicles/Furnishings		12,500				12,500
Total		**12,500**				**12,500**

Funding Sources	FY '23	FY '24	FY '25	FY '26	FY '27	Total
615 - WPCP IMPROVMNTS		12,500				12,500
Total		**12,500**				**12,500**

Budget Impact/Other

Budget Items	FY '23	FY '24	FY '25	FY '26	FY '27	Total
5750.000: OTHER CAPITAL EQUIPMENT=>5,000		12,500				12,500
Total		**12,500**				**12,500**

City Capital Plan Equipment Replacment

FY '23 *thru* FY '27

City of Marshalltown, Iowa

Department WPCP DIVISION
Contact

Project # SCB 5300 16
Project Name REPLACE JET PUMP/MOTOR #1A

Type Equipment
Useful Life 37
Category 520520 WPCP EXP-TREATM
Priority Critical
Status Active
Total Project Cost: $75,000

Division WPC-PLANT
Object 5749.000 OTHER CAPITAL EQ
Location 1905300

Description

UNIT NEW IN 1982

Justification

Expenditures	FY '23	FY '24	FY '25	FY '26	FY '27	Total
Equip/Vehicles/Furnishings				75,000		75,000
Total				**75,000**		**75,000**

Funding Sources	FY '23	FY '24	FY '25	FY '26	FY '27	Total
612 - WPCP REVENUE FUND				75,000		75,000
Total				**75,000**		**75,000**

Budget Impact/Other

Budget Items	FY '23	FY '24	FY '25	FY '26	FY '27	Total
5750.000: OTHER CAPITAL EQUIPMENT=>5,000				75,000		75,000
Total				**75,000**		**75,000**

City Capital Plan Equipment Replacment

FY '23 *thru* FY '27

City of Marshalltown, Iowa

Department WPCP DIVISION
Contact

Project # SCB 5300 17
Project Name REPLACE JET PUMP/MOTOR #1B

Type Equipment
Useful Life 40 years
Category 520520 WPCP EXP-TREATM
Priority Critical
Status Active
Total Project Cost: $75,000

Division WPC-PLANT
Object 5749.000 OTHER CAPITAL EQ
Location 1905300

Description

UNIT NEW IN 1982

Justification

Expenditures	FY '23	FY '24	FY '25	FY '26	FY '27	Total
Equip/Vehicles/Furnishings					75,000	75,000
Total					**75,000**	**75,000**

Funding Sources	FY '23	FY '24	FY '25	FY '26	FY '27	Total
612 - WPCP REVENUE FUND					75,000	75,000
Total					**75,000**	**75,000**

Budget Impact/Other

Budget Items	FY '23	FY '24	FY '25	FY '26	FY '27	Total
5750.000: OTHER CAPITAL EQUIPMENT=>5,000					75,000	75,000
Total					**75,000**	**75,000**

City Capital Plan Equipment Replacment

FY '23 *thru* FY '27

City of Marshalltown, Iowa

Department WPCP DIVISION
Contact

Project # SCB 5300 18
Project Name REPLACE JET PUMP/MOTOR #2A

Type Equipment
Useful Life 37
Category 520520 WPCP EXP-TREATM

Division WPC-PLANT
Object 5749.000 OTHER CAPITAL EQ
Priority Critical
Location 1905300
Status Active
Total Project Cost: **$75,000**

Description

UNIT NEW IN 1982

Justification

Expenditures	FY '23	FY '24	FY '25	FY '26	FY '27	Total
Equip/Vehicles/Furnishings					75,000	75,000
Total					**75,000**	**75,000**

Funding Sources	FY '23	FY '24	FY '25	FY '26	FY '27	Total
612 - WPCP REVENUE FUND					75,000	75,000
Total					**75,000**	**75,000**

Budget Impact/Other

Budget Items	FY '23	FY '24	FY '25	FY '26	FY '27	Total
5750.000: OTHER CAPITAL EQUIPMENT=>5,000					75,000	75,000
Total					**75,000**	**75,000**

City Capital Plan Equipment Replacment

FY '23 *thru* FY '27

City of Marshalltown, Iowa

Department WPCP DIVISION
Contact

Project # SCB 5300 19
Project Name REPLACE JET PUMP/MOTOR #2B

Type Equipment
Useful Life 40 years
Category 520520 WPCP EXP-TREATM
Priority Critical
Status Active
Total Project Cost: $75,000

Division WPC-PLANT
Object 5749.000 OTHER CAPITAL EQ
Location 1905300

Description

UNIT NEW IN 1982

Justification

Expenditures	FY '23	FY '24	FY '25	FY '26	FY '27	Total
Equip/Vehicles/Furnishings					75,000	75,000
Total					**75,000**	**75,000**

Funding Sources	FY '23	FY '24	FY '25	FY '26	FY '27	Total
612 - WPCP REVENUE FUND					75,000	75,000
Total					**75,000**	**75,000**

Budget Impact/Other

Budget Items	FY '23	FY '24	FY '25	FY '26	FY '27	Total
5750.000: OTHER CAPITAL EQUIPMENT=>5,000					75,000	75,000
Total					**75,000**	**75,000**

City Capital Plan Equipment Replacment

FY '23 *thru* FY '27

City of Marshalltown, Iowa

Department WPCP DIVISION
Contact

Project # SCB 5300 20
Project Name REPLACE JET PUMP/MOTOR #3A

Type Equipment
Useful Life 37
Category 520520 WPCP EXP-TREATM
Priority Critical
Status Active
Total Project Cost: $75,000

Division WPC-PLANT
Object 5749.000 OTHER CAPITAL EQ
Location 1905300

Description

UNIT NEW IN 1982

Justification

Expenditures	FY '23	FY '24	FY '25	FY '26	FY '27	Total
Equip/Vehicles/Furnishings				75,000		75,000
Total				**75,000**		**75,000**

Funding Sources	FY '23	FY '24	FY '25	FY '26	FY '27	Total
612 - WPCP REVENUE FUND				75,000		75,000
Total				**75,000**		**75,000**

Budget Impact/Other

Budget Items	FY '23	FY '24	FY '25	FY '26	FY '27	Total
5750.000: OTHER CAPITAL EQUIPMENT=>5,000				75,000		75,000
Total				**75,000**		**75,000**

City Capital Plan Equipment Replacment

FY '23 *thru* FY '27

City of Marshalltown, Iowa

Department WPCP DIVISION
Contact

Project # SCB 5300 21
Project Name REPLACE JET PUMP/MOTOR #3B

Type Equipment
Useful Life 40 years
Category 520520 WPCP EXP-TREATM
Priority Critical
Status Active

Division WPC-PLANT
Object 5749.000 OTHER CAPITAL EQ
Location 1905300

Total Project Cost: **$75,000**

Description

UNIT NEW IN 1982

Justification

Expenditures	FY '23	FY '24	FY '25	FY '26	FY '27	Total
Equip/Vehicles/Furnishings				75,000		75,000
Total				**75,000**		**75,000**

Funding Sources	FY '23	FY '24	FY '25	FY '26	FY '27	Total
612 - WPCP REVENUE FUND		75,000				75,000
Total		**75,000**				**75,000**

Budget Impact/Other

Budget Items	FY '23	FY '24	FY '25	FY '26	FY '27	Total
5750.000: OTHER CAPITAL EQUIPMENT=>5,000		75,000				75,000
Total		**75,000**				**75,000**

City Capital Plan Equipment Replacment

FY '23 *thru* FY '27

City of Marshalltown, Iowa

Department WPCP DIVISION
Contact

Project # SCB 5300 29A
Project Name JET PUMP # 3B VFD-SECONDARY CONTRO BLDG

Type Equipment
Useful Life 15 years
Category 520520 WPCP EXP-TREATM

Division WPC-PLANT
Object 5749.000 OTHER CAPITAL EQ
Priority Critical
Location 1905300
Status Active
Total Project Cost: **$12,000**

Description

USED DRIVE FROM PRELIM PUMPS

Justification

Expenditures	FY '23	FY '24	FY '25	FY '26	FY '27	Total
Equip/Vehicles/Furnishings		12,000				12,000
Total		**12,000**				**12,000**

Funding Sources	FY '23	FY '24	FY '25	FY '26	FY '27	Total
612 - WPCP REVENUE FUND		12,000				12,000
Total		**12,000**				**12,000**

Budget Impact/Other

Budget Items	FY '23	FY '24	FY '25	FY '26	FY '27	Total
5750.000: OTHER CAPITAL EQUIPMENT=>5,000		12,000				12,000
Total		**12,000**				**12,000**

City Capital Plan Equipment Replacment

FY '23 *thru* FY '27

City of Marshalltown, Iowa

Department WPCP DIVISION
Contact

Project # SH5 5900 002
Project Name SLUDGE TANK #5 -MOORING CABLES

Type Equipment
Useful Life 15 years
Category 520520 WPCP EXP-TREATM
Priority Critical
Status Active
Total Project Cost: $2,000

Division WPC-PLANT
Object 5600.000 OPERATING SUPPLI
Location 1905900

Description

INSTALLED IN 1991. PUSHED BACK 5 YRS. Replaced in Peak Flow Project 2012

Justification

Expenditures	FY '23	FY '24	FY '25	FY '26	FY '27	Total
Equip/Vehicles/Furnishings					2,000	2,000
Total					**2,000**	**2,000**

Funding Sources	FY '23	FY '24	FY '25	FY '26	FY '27	Total
612 - WPCP REVENUE FUND					2,000	2,000
Total					**2,000**	**2,000**

Budget Impact/Other

Budget Items	FY '23	FY '24	FY '25	FY '26	FY '27	Total
5600.000: OPERATING SUPPLIES					2,000	2,000
Total					**2,000**	**2,000**

City Capital Plan Equipment Replacment

FY '23 *thru* FY '27

City of Marshalltown, Iowa

Department WPCP DIVISION
Contact

Project # SH6 5900 005
Project Name SLUDGE TANK #6 MOORING CABLES

Type Equipment
Useful Life 15 years
Category 520520 WPCP EXP-TREATM
Priority Critical
Status Active
Total Project Cost: $2,000

Division WPC-PLANT
Object 5600.000 OPERATING SUPPLI
Location 1905900

Description

INSTALLED in Peak Flow Project 2012

Justification

Expenditures	FY '23	FY '24	FY '25	FY '26	FY '27	Total
Equip/Vehicles/Furnishings					2,000	2,000
Total					**2,000**	**2,000**

Funding Sources	FY '23	FY '24	FY '25	FY '26	FY '27	Total
612 - WPCP REVENUE FUND					2,000	2,000
Total					**2,000**	**2,000**

Budget Impact/Other

Budget Items	FY '23	FY '24	FY '25	FY '26	FY '27	Total
5600.000: OPERATING SUPPLIES					2,000	2,000
Total					**2,000**	**2,000**

City Capital Plan Equipment Replacment

FY '23 *thru* FY '27

City of Marshalltown, Iowa

Department WPCP DIVISION
Contact

Project # SLO 4000 004
Project Name AERATION MIXER-LIME SILO

Type Improvement
Useful Life 10 years
Category 520520 WPCP EXP-TREATM

Division WPC-PLANT
Object 5749.000 OTHER CAPITAL EQ
Priority Critical
Location 1904000
Status Active
Total Project Cost: **$10,000**

Description

MIXING DEVICE TO KEEP LIME FROM NOT DROPPING IN HOPPER. $8000.

Justification

Expenditures	FY '23	FY '24	FY '25	FY '26	FY '27	Total
Equip/Vehicles/Furnishings		10,000				10,000
Total		**10,000**				**10,000**

Funding Sources	FY '23	FY '24	FY '25	FY '26	FY '27	Total
612 - WPCP REVENUE FUND		10,000				10,000
Total		**10,000**				**10,000**

Budget Impact/Other

Budget Items	FY '23	FY '24	FY '25	FY '26	FY '27	Total
5750.000: OTHER CAPITAL EQUIPMENT=>5,000		10,000				10,000
Total		**10,000**				**10,000**

City Capital Plan Equipment Replacment

FY '23 *thru* FY '27

City of Marshalltown, Iowa

Department WPCP DIVISION
Contact

Project # STP 6100 001
Project Name RE-ROOF -SLUDGE TRANSFER BLDG

Type Maintenance
Useful Life 15 years
Category 520520 WPCP EXP-TREATM
Priority Critical
Status Active
Total Project Cost: $1,461

Division WPC-PLANT
Object 5410.000 REPAIRS/MAINT
Location 1906100

Description

INSTALLED IN 1991

Justification

Expenditures	FY '23	FY '24	FY '25	FY '26	FY '27	Total
Maintenance				1,461		1,461
Total				**1,461**		**1,461**

Funding Sources	FY '23	FY '24	FY '25	FY '26	FY '27	Total
612 - WPCP REVENUE FUND				1,461		1,461
Total				**1,461**		**1,461**

Budget Impact/Other

Budget Items	FY '23	FY '24	FY '25	FY '26	FY '27	Total
5410.000: REPAIRS / MAINTENANCE				1,461		1,461
Total				**1,461**		**1,461**

City Capital Plan Equipment Replacment

FY '23 *thru* FY '27

City of Marshalltown, Iowa

Department WPCP DIVISION
Contact

Project # STP 6100 006
Project Name SLUDGE FLOW METER-SLUDGE TRANSFER BLDG

Type Equipment
Useful Life 15 years
Category 520520 WPCP EXP-TREATM

Division WPC-PLANT
Object 5749.000 OTHER CAPITAL EQ
Priority Critical
Location 1906100
Status Active
Total Project Cost: **$8,500**

Description

NEW IN 1997, FOR $8,500.

Justification

Expenditures	FY '23	FY '24	FY '25	FY '26	FY '27	Total
Equip/Vehicles/Furnishings		8,500				8,500
Total		**8,500**				**8,500**

Funding Sources	FY '23	FY '24	FY '25	FY '26	FY '27	Total
612 - WPCP REVENUE FUND		8,500				8,500
Total		**8,500**				**8,500**

Budget Impact/Other

Budget Items	FY '23	FY '24	FY '25	FY '26	FY '27	Total
5750.000: OTHER CAPITAL EQUIPMENT=>5,000		8,500				8,500
Total		**8,500**				**8,500**

City Capital Plan Equipment Replacment

FY '23 *thru* FY '27

City of Marshalltown, Iowa

Department WPCP DIVISION
Contact

Project # UVB 6900 001
Project Name RE-ROOF UV DISINFECTION BLDG

Type Maintenance
Useful Life 15 years
Category 520520 WPCP EXP-TREATM
Priority Not Applicable
Status Active
Total Project Cost: $1,656

Division WPC-PLANT
Object 5410.000 REPAIRS/MAINT
Location

Description

RE-ROOF BUILDING. ORIGINAL ROOF IN ?

Justification

Expenditures	FY '23	FY '24	FY '25	FY '26	FY '27	Total
Maintenance				1,656		1,656
Total				**1,656**		**1,656**

Funding Sources	FY '23	FY '24	FY '25	FY '26	FY '27	Total
612 - WPCP REVENUE FUND				1,656		1,656
Total				**1,656**		**1,656**

Budget Impact/Other

Budget Items	FY '23	FY '24	FY '25	FY '26	FY '27	Total
5410.000: REPAIRS / MAINTENANCE				1,656		1,656
Total				**1,656**		**1,656**

City Capital Plan Equipment Replacment

FY '23 *thru* FY '27

City of Marshalltown, Iowa

Department WPCP DIVISION
Contact

Project # UVC 7100 002
Project Name FINAL EFFLUENT SS ANALYZER-UV CHANNEL

Type Equipment
Useful Life 10 years
Category 520520 WPCP EXP-TREATM
Priority Critical
Status Active

Division WPC-PLANT
Object 5749.000 OTHER CAPITAL EQ
Location 1907100

Total Project Cost: **$8,000**

Description

PURCHASED IN 1999 FOR $8,000.

Justification

Expenditures	FY '23	FY '24	FY '25	FY '26	FY '27	Total
Equip/Vehicles/Furnishings				8,000		8,000
Total				**8,000**		**8,000**

Funding Sources	FY '23	FY '24	FY '25	FY '26	FY '27	Total
612 - WPCP REVENUE FUND				8,000		8,000
Total				**8,000**		**8,000**

Budget Impact/Other

Budget Items	FY '23	FY '24	FY '25	FY '26	FY '27	Total
5750.000: OTHER CAPITAL EQUIPMENT=>5,000				8,000		8,000
Total				**8,000**		**8,000**

City Capital Plan Equipment Replacment

FY '23 *thru* FY '27

City of Marshalltown, Iowa

Department WPCP DIVISION
Contact

Project # VEH 8100 003
Project Name PICKUP 1/2 TON ADMIN-VEHICLE

Type Equipment
Useful Life 6 years
Category 520520 WPCP EXP-TREATM

Division WPC-PLANT
Object 5749.000 OTHER CAPITAL EQ
Priority Critical
Location 1908100
Status Active
Total Project Cost: **$38,987**

Description

PURCHASED IN 2005 FOR $20,000. WILL TRADE IN 2012 FOR APPROX. $6,000

Justification

TRADE IN TO PURCHASE AN SUV TO BE MORE USEFUL ALL AROUND FOR MAINTENANCE

Expenditures	FY '23	FY '24	FY '25	FY '26	FY '27	Total
Equip/Vehicles/Furnishings	38,987					38,987
Total	**38,987**					**38,987**

Funding Sources	FY '23	FY '24	FY '25	FY '26	FY '27	Total
612 - WPCP REVENUE FUND	38,987					38,987
Total	**38,987**					**38,987**

Budget Impact/Other

Budget Items	FY '23	FY '24	FY '25	FY '26	FY '27	Total
5750.000: OTHER CAPITAL EQUIPMENT=>5,000	38,987					38,987
Total	**38,987**					**38,987**

City Capital Plan Equipment Replacment

FY '23 *thru* FY '27

City of Marshalltown, Iowa

Department WPCP DIVISION
Contact

Project # VEH 8100 004
Project Name PICKUP 1/2 TON-VEHICLE

Type Equipment
Useful Life 15 years
Category 520520 WPCP EXP-TREATM

Division WPC-PLANT
Object 5749.000 OTHER CAPITAL EQ
Priority Critical
Location 1908100
Status Active
Total Project Cost: **$20,000**

Description

PURCHASED IN 1996 FOR $13,000.

Justification

Expenditures	FY '23	FY '24	FY '25	FY '26	FY '27	Total
Equip/Vehicles/Furnishings				20,000		20,000
Total				**20,000**		**20,000**

Funding Sources	FY '23	FY '24	FY '25	FY '26	FY '27	Total
612 - WPCP REVENUE FUND				20,000		20,000
Total				**20,000**		**20,000**

Budget Impact/Other

Budget Items	FY '23	FY '24	FY '25	FY '26	FY '27	Total
5750.000: OTHER CAPITAL EQUIPMENT=>5,000				20,000		20,000
Total				**20,000**		**20,000**

City Capital Plan Equipment Replacment

FY '23 *thru* FY '27

City of Marshalltown, Iowa

Department WPCP DIVISION
Contact

Project # VEH 8100 009
Project Name PICKUP 3/4 TON-VEHICLE

Type Equipment
Useful Life 15 years
Category 520520 WPCP EXP-TREATM

Division WPC-PLANT
Object 5749.000 OTHER CAPITAL EQ
Priority Not Applicable
Location 1908100
Status Active
Total Project Cost: **$23,000**

Description

REPLACES 1/2 TON PICKUP WHICH IS STILL IN USE

Justification

Expenditures	FY '23	FY '24	FY '25	FY '26	FY '27	Total
Equip/Vehicles/Furnishings				23,000		23,000
Total				**23,000**		**23,000**

Funding Sources	FY '23	FY '24	FY '25	FY '26	FY '27	Total
612 - WPCP REVENUE FUND				23,000		23,000
Total				**23,000**		**23,000**

Budget Impact/Other

Budget Items	FY '23	FY '24	FY '25	FY '26	FY '27	Total
5750.000: OTHER CAPITAL EQUIPMENT=>5,000				23,000		23,000
Total				**23,000**		**23,000**

City Capital Plan Equipment Replacment

FY '23 *thru* FY '27

City of Marshalltown, Iowa

Department WPCP DIVISION
Contact

Project # WHT 8800 001
Project Name WASTE HOLDING PUMP #2

Type Equipment
Useful Life 15 years
Category 520520 WPCP EXP-TREATM
Priority Critical
Status Active

Division WPC-PLANT
Object 5749.000 OTHER CAPITAL EQ
Location 1908800

Total Project Cost: **$6,300**

Description

FLYGT SUBMERSIBLE PUMP AND RAIL SYSTEM. REPLACING THE OLD HYDROMATIC PUMPS. NEW 8-1-2006. REPLACE JUST PUMP IN 2022

Justification

Expenditures	FY '23	FY '24	FY '25	FY '26	FY '27	Total
Equip/Vehicles/Furnishings		6,300				6,300
Total		**6,300**				**6,300**

Funding Sources	FY '23	FY '24	FY '25	FY '26	FY '27	Total
612 - WPCP REVENUE FUND		6,300				6,300
Total		**6,300**				**6,300**

Budget Impact/Other

Budget Items	FY '23	FY '24	FY '25	FY '26	FY '27	Total
5750.000: OTHER CAPITAL EQUIPMENT=>5,000		6,300				6,300
Total		**6,300**				**6,300**

City Capital Plan Equipment Replacment

FY '23 *thru* FY '27

City of Marshalltown, Iowa

Department WPCP DIVISION
Contact

Project # WHT 8800 002
Project Name WASTE HOLDING PUMP #1

Type Equipment
Useful Life 15 years
Category 520520 WPCP EXP-TREATM
Priority Critical
Status Active
Total Project Cost: $6,300

Division WPC-PLANT
Object 5749.000 OTHER CAPITAL EQ
Location 1908800

Description

CURRENTLY A HYDROMATIC PUMP. AND WE HAVE A SPARE. WILL NOT CHANGE TO A FLYGT PUMP TILL HYDROMATIC FAILS. IN BUDGET FOR 09, BUT WILL NOT BE PURCHASED TILL PUMPS FAIL. REPLACED FY2010.

Justification

Expenditures	FY '23	FY '24	FY '25	FY '26	FY '27	Total
Equip/Vehicles/Furnishings			6,300			6,300
Total			**6,300**			**6,300**

Funding Sources	FY '23	FY '24	FY '25	FY '26	FY '27	Total
612 - WPCP REVENUE FUND			6,300			6,300
Total			**6,300**			**6,300**

Budget Impact/Other

Budget Items	FY '23	FY '24	FY '25	FY '26	FY '27	Total
5750.000: OTHER CAPITAL EQUIPMENT=>5,000			6,300			6,300
Total			**6,300**			**6,300**

2023-074

RESOLUTION ADOPTING THE BUDGET AND CERTIFYING TAXES FOR THE FISCAL YEAR ENDING JUNE 30, 2024 AND RELATED TRANSFERS BETWEEN FUNDS

WHEREAS, the Notice of Public Hearing Budget - Proposed Budget for the City of Marshalltown, Iowa for the fiscal year beginning July 1, 2023 and ending June 30, 2024 was published in the Marshalltown Times Republican on Friday, March 31, 2023; and

WHEREAS, a public hearing was held according to the published notice as required by law; and

WHEREAS, the minutes record any oral or written comments, questions or objections filed; and

WHEREAS, the adopted property taxes do not exceed the published total tax levy rate of $16.00000 per $1,000 valuation on regular property and $3.00375 on agricultural land; and

WHEREAS, the adopted expenditures do not exceed the published amounts in each of the nine program areas, or in total; and

WHEREAS, the long-term debt schedule shows sufficient payment amounts to pay the G.O. debt certified by the City of Marshalltown; and

WHEREAS, a public hearing of maximum property tax levy dollars for specific levies as outlined in SF634 was held on February 13, 2023 and approved by Council; and

WHEREAS, the fiscal year 2024 budget provides for certain transfers between funds; and

WHEREAS, the Council has determined that adopting the budget, which includes transfers between funds, and certifying taxes is in the best interest of the City of Marshalltown; and

NOW THEREFORE, IT IS HEREBY RESOLVED BY THE CITY COUNCIL OF THE CITY OF MARSHALLTOWN, IOWA:

Section 1. That the budget and certification of city taxes for the fiscal year ending June 30, 2024 be adopted.

Section 2. The City Finance Director is directed to certify and file the budget and certificate of taxes as adopted and deliver an original publication notice to the Marshall County Auditor on or before April 30, 2023.

Section 3. The City Finance Director has the authority to make transfers between funds up to the amount budgeted as needed.

Passed this 10th day of April 2023, and signed this _____ day of April 2023.

CITY OF MARSHALLTOWN, IOWA

_____

Joel T.S. Greer, Mayor

ATTEST:

_____

Alicia Hunter, City Clerk

NOTICE OF PUBLIC HEARING -- PROPOSED BUDGET

Fiscal Year July 1, 2023 - June 30, 2024

City of: MARSHALLTOWN

The City Council will conduct a public hearing on the proposed Budget at: Council Chambers, 10 West State Street, Marshalltown, IA Meeting Date: 4/10/2023 Meeting Time: 05:30 PM

At the public hearing any resident or taxpayer may present objections to, or arguments in favor of , any part of the proposed budget. This notice represents a summary of the supporting detail of revenues and expenditures on file with the City Clerk and County Auditor.

City budgets are subject to protest. If protest petition requirements are met, the State Appeal Board will hold a local hearing. For more information, consult https://dom.iowa.gov/local-budget-appeals.

The Budget Estimate Summary of proposed receipts and expenditures is shown below. Copies of the the detailed proposed Budget may be obtained or viewed at the offices of the Mayor, City Clerk, and at the Library.

The estimated Total tax levy rate per $1000 valuation on regular property 16.00000

The estimated tax levy rate per $1000 valuation on Agricultural land is 3.00375

At the public hearing, any resident or taxpayer may present objections to, or arguments in favor of, any part of the proposed budget.

Phone Number
(641) 754-5760 ext: 2100

City Clerk/Finance Officer's NAME
Diana Steiner, Finance DIrector

		Budget FY 2024	Re-estimated FY 2023	Actual FY 2022
Revenues & Other Financing Sources				
Taxes Levied on Property	1	13,336,910	12,999,858	12,517,872
Less: Uncollected Property Taxes-Levy Year	2	0	0	0
Net Current Property Taxes	3	13,336,910	12,999,858	12,517,872
Delinquent Property Taxes	4	0	0	43,820
TIF Revenues	5	1,114,341	485,255	922,123
Other City Taxes	6	6,119,486	5,751,637	6,747,285
Licenses & Permits	7	363,750	333,855	265,789
Use of Money and Property	8	809,896	1,263,725	685,968
Intergovernmental	9	12,144,192	22,877,394	11,976,721
Charges for Fees & Service	10	18,643,907	17,812,759	17,721,243
Special Assessments	11	500	500	537
Miscellaneous	12	1,447,603	1,486,581	1,079,928
Other Financing Sources	13	16,161,450	17,955,166	9,755,412
Transfers In	14	19,698,442	16,982,828	14,985,294
Total Revenues and Other Sources	15	89,840,477	97,949,558	76,701,992
Expenditures & Other Financing Uses				
Public Safety	16	10,753,547	10,670,182	9,966,987
Public Works	17	4,762,347	5,186,787	5,039,769
Health and Social Services	18	1,583,162	1,671,356	611,572
Culture and Recreation	19	4,630,191	4,345,191	3,226,370
Community and Economic Development	20	5,106,034	4,678,209	3,491,587
General Government	21	1,740,292	1,691,689	1,424,725
Debt Service	22	7,031,413	5,846,502	5,287,543
Capital Projects	23	27,498,842	19,805,502	7,735,897
Total Government Activities Expenditures	24	63,105,828	53,895,418	36,784,450
Business Type / Enterprises	25	21,401,502	23,113,434	17,440,454
Total ALL Expenditures	26	84,507,330	77,008,852	54,224,904
Transfers Out	27	19,698,442	16,982,828	14,985,294
Total ALL Expenditures/Transfers Out	28	104,205,772	93,991,680	69,210,198
Excess Revenues & Other Sources Over (Under) Expenditures/Transfers Out	29	-14,365,295	3,957,878	7,491,794
Beginning Fund Balance July 1	30	69,192,114	65,234,236	57,742,442
Ending Fund Balance June 30	31	54,826,819	69,192,114	65,234,236

FISCAL YEAR JULY 1, 2023 - JUNE 30, 2024
ADOPTION OF BUDGET AND CERTIFICATION OF CITY TAXES
The City of : MARSHALLTOWN County Name: MARSHALL COUNTY
Adopted On: (entered upon adoption) Resolution: (entered upon adoption)

The below-signed certifies that the City Council, on the date stated above, lawfully approved the named resolution adopting a budget for next fiscal year, as summarized on this and the supporting pages.

		With Gas & Electric		Without Gas & Electric	
Regular	2a	929,248,952	2b	827,919,102	**City Number: 64-611**
DEBT SERVICE	3a	959,277,158	3b	857,947,308	**Last Official Census: 27,591**
Ag Land	4a	5,790,975			

TAXES LEVIED

Purpose	Dollar Limit	ENTER FIRE DISTRICT RATE BELOW			Request with Utility Replacement	Property Taxes Levied		Rate
Regular General levy	8.10000			5	7,526,917	6,706,145	43	8.10000
Non-Voted Other Permissible Levies								
Contract for use of Bridge	0.67500			6	0	0	44	0.00000
Opr & Maint publicly owned Transit	0.95000			7	275,000	245,014	45	0.29594
Rent, Ins. Maint of Civic Center	Amt Nec			8	100,000	89,092	46	0.10761
Opr & Maint of City owned Civic Center	0.13500			9	0	0	47	0.00000
Planning a Sanitary Disposal Project	0.06750			10	0	0	48	0.00000
Aviation Authority (under sec.330A.15)	0.27000			11	0	0	49	0.00000
Levee Impr. fund in special charter city	0.06750			13	0	0	51	0.00000
Liability, property & self insurance costs	Amt Nec			14	371,954	331,391	52	0.40027
Support of a Local Emerg.Mgmt.Comm.	Amt Nec			462	36,337	32,372	465	0.03910
Voted Other Permissible Levies								
Instrumental/Vocal Music Groups	0.13500			15	9,000	8,023	53	0.00969
Memorial Building	0.81000			16	0	0	54	0.00000
Symphony Orchestra	0.13500			17	0	0	55	0.00000
Cultural & Scientific Facilities	0.27000			18	0	0	56	0.00000
County Bridge	As Voted			19	0	0	57	0.00000
Missi or Missouri River Bridge Const.	1.35000			20	0	0	58	0.00000
Aid to a Transit Company	0.03375			21	0	0	59	0.00000
Maintain Institution received by gift/devise	0.20500			22	0	0	60	0.00000
City Emergency Medical District	1.00000			463	0	0	466	0.00000
Support Public Library	0.27000			23	250,897	223,538	61	0.27000
Unified Law Enforcement	1.50000			24	0	0	62	0.00000
Total General Fund Regular Levies (5 thru 24)				25	8,570,105	7,635,575		
Ag Land	3.00375			26	17,395	17,395	63	3.00375
Total General Fund Tax Levies (25 + 26)				27	8,587,500	7,652,970		
Special Revenue Levies								
Emergency (if general fund at levy limit)	0.27000			28	250,897	223,538	64	0.27000
Police & Fire Retirement	Amt Nec			29	943,378	840,503		1.01520
FICA & IPERS (if general fund at levy limit)	Amt Nec			30	799,669	712,466		0.86055
Other Employee Benefits	Amt Nec			31	1,423,535	1,268,306		1.53192
Total Employee Benefit Levies (29,30,31)				32	3,166,582	2,821,275	65	3.40767
Sub Total Special Revenue Levies (28+32)				33	3,417,479	3,044,813		
As Req		**With Gas & Elec Valuation**	**Without Gas & Elec Valuation**					
SSMID 1		0	0	34		0	66	0.00000
SSMID 2		0	0	35		0	67	0.00000
SSMID 3		0	0	36		0	68	0.00000
SSMID 4		0	0	37		0	69	0.00000
SSMID 5		0	0	555		0	565	0.00000
SSMID 6		0	0	556		0	566	0.00000
SSMID 7		0	0	1177		0	1179	0.00000
SSMID 8		0	0	1185		0	1187	0.00000
Total Special Revenue Levies				39	3,417,479	3,044,813		
Debt Service Levy 76.10(6)	Amt Nec			40	2,325,974	2,080,282	70	2.42472
Capital Projects (Capital Improv. Reserve)	0.67500			41	627,243	558,845	71	0.67500
Total Property Taxes (27+39+40+41)				42	14,958,196	13,336,910	72	16.00000

(Signature) (Date) (County Auditor) (Date)

FUND BALANCE
City Name: MARSHALLTOWN
Fiscal Year July 1, 2023 - June 30, 2024

		GENERAL	SPECIAL REVENUES	TIF SPECIAL REVENUES	DEBT SERVICE	CAPITAL PROJECTS	PERMANENT	TOTAL GOVERNMENT	PROPRIETARY	GRAND TOTAL
Annual Report FY 2022										
Beginning Fund Balance July 1	1	6,275,335	11,819,848	330,997	125,336	7,777,386	0	26,328,902	31,413,540	57,742,442
Actual Revenues Except Beg Balance	2	16,867,330	16,929,466	936,334	5,334,684	17,458,428	0	57,526,242	19,175,750	76,701,992
Actual Expenditures Except End Balance	3	16,717,261	15,591,563	798,035	5,287,543	11,990,401	0	50,384,803	18,825,395	69,210,198
Ending Fund Balance June 30	4	6,425,404	13,157,751	469,296	172,477	13,245,413	0	33,470,341	31,763,895	65,234,236
Re-Estimated FY 2023										
Beginning Fund Balance	5	6,425,404	13,157,751	469,296	172,477	13,245,413	0	33,470,341	31,763,895	65,234,236
Re-Est Revenues	6	18,750,449	23,533,667	491,255	5,881,754	23,217,414	0	71,874,539	26,075,019	97,949,558
Re-Est Expenditures	7	18,574,673	21,243,075	974,271	5,846,502	22,897,286	0	69,535,807	24,455,873	93,991,680
Ending Fund Balance	8	6,601,180	15,448,343	-13,720	207,729	13,565,541	0	35,809,073	33,383,041	69,192,114
Budget FY 2024										
Beginning Fund Balance	9	6,601,180	15,448,343	-13,720	207,729	13,565,541	0	35,809,073	33,383,041	69,192,114
Revenues	10	19,161,992	18,323,073	1,114,541	7,124,597	20,771,439	0	66,495,642	23,344,835	89,840,477
Expenditures	11	18,858,181	20,501,843	1,082,464	7,031,413	33,270,945	0	80,744,846	23,460,926	104,205,772
Ending Fund Balance	12	6,904,991	13,269,573	18,357	300,913	1,066,035	0	21,559,869	33,266,950	54,826,819

LOCAL EMC SUPPORT
City Name: MARSHALLTOWN
Fiscal Year July 1, 2023 - June 30, 2024

As provided in Iowa Code Section 384.12, subsection 22, a city may levy the amount necessary in support of a local Emergency Management Commission. In addition to this individual levy, Emergency Management Commission support may also be included as part of the General Fund Levy. Iowa Code Section 29C.17, subsection 5 states that any support from cities or counties must be separately reported on tax statements issued by the county treasurer. Input the amount of General Fund Levy request to be used for support of an Emergency Management Commission. The total below will reflect the total amount of Emergency Management Commission support provided by the City.

	Request with Utility Replacement	Property Taxes Levied
Portion of General Fund Levy Used for Emerg. Mgmt. Comm.		0
Support of a Local Emerg.Mgmt.Comm.	36,337	32,372
TOTAL FOR FY 2024	36,337	32,372

RE-ESTIMATED EXPENDITURES SCHEDULE PAGE 1
City Name: MARSHALLTOWN
Fiscal Year July 1, 2022 - June 30, 2023

GOVERNMENT ACTIVITIES CONT.		GENERAL	SPECIAL REVENUE	TIF SPECIAL REVENUES	DEBT SERVICE	CAPITAL PROJECTS	PERMANENT	PROPRIETARY	RE-ESTIMATED 2023	ACTUAL 2022
PUBLIC SAFETY										
Police Department/Crime Prevention	1	5,650,973	530,531						6,181,504	5,747,622
Jail	2								0	0
Emergency Management	3	36,496							36,496	34,444
Flood Control	4	55							55	59
Fire Department	5	3,679,248	48,428						3,727,676	3,565,134
Ambulance	6								0	0
Building Inspections	7	640,332	4,119						644,451	567,728
Miscellaneous Protective Services	8								0	0
Animal Control	9	80,000							80,000	52,000
Other Public Safety	10								0	0
TOTAL (lines 1 - 10)	11	10,087,104	583,078				0		10,670,182	9,966,987
PUBLIC WORKS										
Roads, Bridges, & Sidewalks	12	1,186,805	1,987,684						3,174,489	2,725,717
Parking - Meter and Off-Street	13	70,128	71,500						141,628	36,314
Street Lighting	14	43,579	254,542						298,121	283,306
Traffic Control and Safety	15	109,701	139,618						249,319	272,128
Snow Removal	16	44,794	226,465						271,259	277,361
Highway Engineering	17	369,317	131,189						500,506	549,084
Street Cleaning	18		16,672						16,672	11,552
Airport (if not Enterprise)	19	144,034	33,392						177,426	734,026
Garbage (if not Enterprise)	20	113,708							113,708	113,434
Other Public Works	21	4,000	239,659						243,659	36,847
TOTAL (lines 12 - 21)	22	2,086,066	3,100,721				0		5,186,787	5,039,769
HEALTH & SOCIAL SERVICES										
Welfare Assistance	23								0	0
City Hospital	24								0	0
Payments to Private Hospitals	25								0	0
Health Regulation and Inspection	26		1,671,356						1,671,356	611,572
Water, Air, and Mosquito Control	27								0	0
Community Mental Health	28								0	0
Other Health and Social Services	29								0	0
TOTAL (lines 23 - 29)	30	0	1,671,356				0		1,671,356	611,572
CULTURE & RECREATION										
Library Services	31	1,518,118	177,687						1,695,805	1,411,955
Museum, Band and Theater	32	11,000							11,000	11,264
Parks	33	1,158,048	512,544						1,670,592	1,025,197
Recreation	34	681,149	8,047						689,196	564,222
Cemetery	35								0	0
Community Center, Zoo, & Marina	36	100,000							100,000	100,000
Other Culture and Recreation	37	135,598	43,000						178,598	113,732
TOTAL (lines 31 - 37)	38	3,603,913	741,278				0		4,345,191	3,226,370

RE-ESTIMATED EXPENDITURES SCHEDULE PAGE 2
City Name: MARSHALLTOWN
Fiscal Year July 1, 2022 - June 30, 2023

GOVERNMENT ACTIVITIES CONT.		GENERAL	SPECIAL REVENUE	TIF SPECIAL REVENUES	DEBT SERVICE	CAPITAL PROJECTS	PERMANENT	PROPRIETARY	RE-ESTIMATED 2023	ACTUAL 2022
COMMUNITY & ECONOMIC DEVELOPMENT										
Community Beautification	39	20,999	168,000						188,999	13,997
Economic Development	40	326,281	1,666,468	215,212					2,207,961	1,181,081
Housing and Urban Renewal	41		1,499,878						1,499,878	1,229,524
Planning & Zoning	42	228,487							228,487	259,345
Other Com & Econ Development	43	337,665	215,219						552,884	604,151
TIF Rebates	44								0	203,489
TOTAL (lines 39 - 44)	45	913,432	3,549,565	215,212			0		4,678,209	3,491,587
GENERAL GOVERNMENT										
Mayor, Council, & City Manager	46	234,681	53,518						288,199	226,188
Clerk, Treasurer, & Finance Adm.	47	1,078,294	25,745						1,104,039	939,667
Elections	48								0	3,807
Legal Services & City Attorney	49	69,668							69,668	88,162
City Hall & General Buildings	50	211,410	500						211,910	158,543
Tort Liability	51								0	0
Other General Government	52	17,873							17,873	8,358
TOTAL (lines 46 - 52)	53	1,611,926	79,763	0			0		1,691,689	1,424,725
DEBT SERVICE	54				5,846,502				5,846,502	5,287,543
Gov Capital Projects	55					19,805,502			19,805,502	7,735,897
TIF Capital Projects	56								0	0
TOTAL CAPITAL PROJECTS	57	0	0	0		19,805,502	0		19,805,502	7,735,897
TOTAL Governmental Activities Expenditures (lines 11+22+30+38+44+52+53+54)	58	18,302,441	9,725,761	215,212	5,846,502	19,805,502	0		53,895,418	36,784,450
BUSINESS TYPE ACTIVITIES Proprietary: Enterprise & Budgeted ISF										
Water Utility	59							5,774,039	5,774,039	3,980,160
Sewer Utility	60							3,756,235	3,756,235	4,686,324
Electric Utility	61								0	0
Gas Utility	62								0	0
Airport	63								0	0
Landfill/Garbage	64							97,657	97,657	67,740
Transit	65							1,015,447	1,015,447	838,423
Cable TV, Internet & Telephone	66								0	0
Housing Authority	67								0	0
Storm Water Utility	68							954,875	954,875	1,925,713
Other Business Type (city hosp., ISF, parking, etc.)	69							42,173	42,173	43,050
Enterprise DEBT SERVICE	70							1,690,659	1,690,659	2,129,971
Enterprise CAPITAL PROJECTS	71							9,782,349	9,782,349	3,769,073
Enterprise TIF CAPITAL PROJECTS	72								0	0
TOTAL BUSINESS TYPE EXPENDITURES (lines 59+72)	73							23,113,434	23,113,434	17,440,454
TOTAL ALL EXPENDITURES (lines 58+73)	74	18,302,441	9,725,761	215,212	5,846,502	19,805,502	0	23,113,434	77,008,852	54,224,904
Regular Transfers Out	75	272,232	11,517,314			3,091,784		1,342,439	16,223,769	14,446,200
Internal TIF Loan Transfers Out	76			759,059					759,059	539,094
Total ALL Transfers Out	77	272,232	11,517,314	759,059	0	3,091,784	0	1,342,439	16,982,828	14,985,294
Total Expenditures and Other Fin Uses (lines 74+77)	78	18,574,673	21,243,075	974,271	5,846,502	22,897,286	0	24,455,873	93,991,680	69,210,198
Ending Fund Balance June 30	79	6,601,180	15,448,343	-13,720	207,729	13,565,541	0	33,383,041	69,192,114	65,234,236

RE-ESTIMATED REVENUES DETAIL
City Name: MARSHALLTOWN
Fiscal Year July 1, 2022 - June 30, 2023

REVENUES & OTHER FINANCING SOURCES		GENERAL	SPECIAL REVENUE	TIF SPECIAL REVENUES	DEBT SERVICE	CAPITAL PROJECTS	PERMANENT	PROPRIETARY	RE-ESTIMATED 2023	ACTUAL 2022
Taxes Levied on Property	1	7,713,209	3,998,050		718,605	569,994			12,999,858	12,517,872
Less: Uncollected Property Taxes - Levy Year	2								0	0
Net Current Property Taxes (line 1 minus line 2)	3	7,713,209	3,998,050		718,605	569,994			12,999,858	12,517,872
Delinquent Property Taxes	4								0	43,820
TIF Revenues	5			485,255					485,255	922,123
Other City Taxes:										
Utility Tax Replacement Excise Taxes	6	743,187	386,074		68,334	55,042			1,252,637	1,403,092
Utility francise tax (Iowa Code Chapter 364.2)	7	190,000							190,000	189,316
Parimutuel wager tax	8								0	0
Gaming wager tax	9								0	0
Mobile Home Taxes	10	8,300			700				9,000	12,402
Hotel/Motel Taxes	11	600,000							600,000	486,552
Other **Local Option Taxes**	12		3,700,000						3,700,000	4,655,923
Subtotal - Other City Taxes (lines 6 thru 12)	13	1,541,487	4,086,074		69,034	55,042			5,751,637	6,747,285
Licenses & Permits	14	328,006						5849	333,855	265,789
Use of Money & Property	15	245,245	222,555	6,000	16,000	268,309		505,616	1,263,725	685,968
Intergovernmental:										
Federal Grants & Reimbursements	16		8,622,396			5,162,109		678,338	14,462,843	6,336,710
Road Use Taxes	17		3,490,000						3,490,000	3,813,251
Other State Grants & Reimbursements	18	379,387	1,272,887		18,551	2,141,485		197,650	4,009,960	1,528,943
Local Grants & Reimbursements	19	104,410	55,000			755,181			914,591	297,817
Subtotal - Intergovernmental (lines 16 thru 19)	20	483,797	13,440,283	0	18,551	8,058,775		875,988	22,877,394	11,976,721
Charges for Fees & Service:										
Water Utility	21							7,287,409	7,287,409	6,880,380
Sewer Utility	22							7,948,000	7,948,000	7,915,917
Electric Utility	23								0	0
Gas Utility	24								0	0
Parking	25	75,350							75,350	48,986
Airport	26	7,000							7,000	5,562
Landfill/Garbage	27	150,000						71,017	221,017	252,323
Hospital	28								0	0
Transit	29							124,520	124,520	122,878
Cable TV, Internet & Telephone	30								0	0
Housing Authority	31								0	0
Storm Water Utility	32							1,350,700	1,350,700	1,351,252
Other Fees & Charges for Service	33	750,938	1,825					46,000	798,763	1,143,945
Subtotal - Charges for Service (lines 21 thru 33)	34	983,288	1,825		0	0	0	16,827,646	17,812,759	17,721,243
Special Assessments	35					500			500	537
Miscellaneous	36	41,005	927,821			451,959		65,796	1,486,581	1,079,928
Other Financing Sources: Regular Operating Transfers In	37	6,958,103	811,633		4,673,199	3,436,977		343,857	16,223,769	14,446,200
Internal TIF Loan Transfers In	38	372,694			386,365				759,059	539,094
Subtotal ALL Operating Transfers In	39	7,330,797	811,633	0	5,059,564	3,436,977	0	343,857	16,982,828	14,985,294
Proceeds of Debt (Excluding TIF Internal Borrowing)	40		45,426			10,360,858		7,443,455	17,849,739	9,422,388
Proceeds of Capital Asset Sales	41	83,615				15,000		6,812	105,427	333,024
Subtotal-Other Financing Sources (lines 36 thru 38)	42	7,414,412	857,059	0	5,059,564	13,812,835	0	7,794,124	34,937,994	24,740,706
Total Revenues except for beginning fund balance (lines 3, 4, 5, 12, 13, 14, 19, 33, 34, 35, & 39)	43	18,750,449	23,533,667	491,255	5,881,754	23,217,414	0	26,075,019	97,949,558	76,701,992
Beginning Fund Balance July 1	44	6,425,404	13,157,751	469,296	172,477	13,245,413	0	31,763,895	65,234,236	57,742,442

EXPENDITURES SCHEDULE PAGE 1
City Name: MARSHALLTOWN
Fiscal Year July 1, 2023 - June 30, 2024

GOVERNMENT ACTIVITIES		GENERAL	SPECIAL REVENUES	TIF SPECIAL REVENUES	DEBT SERVICE	CAPITAL PROJECTS	PERMANENT	PROPRIETARY	BUDGET 2024	RE-ESTIMATED 2023	ACTUAL 2022
PUBLIC SAFETY											
Police Department/Crime Prevention	1	5,861,983	291,157						6,153,140	6,181,504	5,747,622
Jail	2								0	0	0
Emergency Management	3	38,211							38,211	36,496	34,444
Flood Control	4	56							56	55	59
Fire Department	5	3,814,621	17,000						3,831,621	3,727,676	3,565,134
Ambulance	6								0	0	0
Building Inspections	7	647,319							647,319	644,451	567,728
Miscellaneous Protective Services	8								0	0	0
Animal Control	9	83,200							83,200	80,000	52,000
Other Public Safety	10								0	0	0
TOTAL (lines 1 - 10)	11	10,445,390	308,157				0		10,753,547	10,670,182	9,966,987
PUBLIC WORKS											
Roads, Bridges, & Sidewalks	12	1,208,702	1,591,433						2,800,135	3,174,489	2,725,717
Parking - Meter and Off-Street	13	69,291							69,291	141,628	36,314
Street Lighting	14	75,959	265,800						341,759	298,121	283,306
Traffic Control and Safety	15	85,321	105,435						190,756	249,319	272,128
Snow Removal	16	45,025	273,500						318,525	271,259	277,361
Highway Engineering	17	440,062	136,300						576,362	500,506	549,084
Street Cleaning	18		16,500						16,500	16,672	11,552
Airport	19	189,811							189,811	177,426	734,026
Garbage (if not Enterprise)	20	113,708							113,708	113,708	113,434
Other Public Works	21	4,000	141,500						145,500	243,659	36,847
TOTAL (lines 12 - 21)	22	2,231,879	2,530,468				0		4,762,347	5,186,787	5,039,769
HEALTH & SOCIAL SERVICES											
Welfare Assistance	23								0	0	0
City Hospital	24								0	0	0
Payments to Private Hospitals	25								0	0	0
Health Regulation and Inspection	26		1,583,162						1,583,162	1,671,356	611,572
Water, Air, and Mosquito Control	27								0	0	0
Community Mental Health	28								0	0	0
Other Health and Social Services	29								0	0	0
TOTAL (lines 23 - 29)	30	0	1,583,162				0		1,583,162	1,671,356	611,572
CULTURE & RECREATION											
Library Services	31	1,518,075	834,740						2,352,815	1,695,805	1,411,955
Museum, Band and Theater	32	9,000							9,000	11,000	11,264
Parks	33	957,784	125,681						1,083,465	1,670,592	1,025,197
Recreation	34	689,599	7,547						697,146	689,196	564,222
Cemetery	35								0	0	0
Community Center, Zoo, & Marina	36	100,000							100,000	100,000	100,000
Other Culture and Recreation	37	143,715	244,050						387,765	178,598	113,732
TOTAL (lines 31 - 37)	38	3,418,173	1,212,018				0		4,630,191	4,345,191	3,226,370

EXPENDITURES SCHEDULE PAGE 2
City Name: MARSHALLTOWN
Fiscal Year July 1, 2023 - June 30, 2024

GOVERNMENT ACTIVITIES		GENERAL	SPECIAL REVENUES	TIF SPECIAL REVENUES	DEBT SERVICE	CAPITAL PROJECTS	PERMANENT	PROPRIETARY	BUDGET 2024	RE-ESTIMATED 2023	ACTUAL 2022
COMMUNITY & ECONOMIC DEVELOPMENT											
Community Beautification	39	23,989							23,989	188,999	13,997
Economic Development	40	102,202	2,548,883	628,743					3,279,828	2,207,961	1,181,081
Housing and Urban Renewal	41		1,286,473						1,286,473	1,499,878	1,229,524
Planning & Zoning	42	179,744							179,744	228,487	259,345
Other Com & Econ Development	43	336,000							336,000	552,884	604,151
TIF Rebates	44								0	0	203,489
TOTAL (lines 39 - 44)	45	641,935	3,835,356	628,743			0		5,106,034	4,678,209	3,491,587
GENERAL GOVERNMENT											
Mayor, Council, & City Manager	46	240,977	8,518						249,495	288,199	226,188
Clerk, Treasurer, & Finance Adm.	47	1,055,409	2,345						1,057,754	1,104,039	939,667
Elections	48	4,000							4,000	0	3,807
Legal Services & City Attorney	49	82,180							82,180	69,668	88,162
City Hall & General Buildings	50	294,378							294,378	211,910	158,543
Tort Liability	51								0	0	0
Other General Government	52	52,485							52,485	17,873	8,358
TOTAL (lines 46 - 52)	53	1,729,429	10,863	0			0		1,740,292	1,691,689	1,424,725
DEBT SERVICE	54				7,031,413				7,031,413	5,846,502	5,287,543
Gov Capital Projects	55					27,498,842			27,498,842	19,805,502	7,735,897
TIF Capital Projects	56								0	0	0
TOTAL CAPITAL PROJECTS	57	0	0	0		27,498,842	0		27,498,842	19,805,502	7,735,897
TOTAL Government Activities Expenditures (lines 11+22+30+38+45+53+54+57)	58	18,466,806	9,480,024	628,743	7,031,413	27,498,842	0		63,105,828	53,895,418	36,784,450
BUSINESS TYPE ACTIVITIES											
Proprietary: Enterprise & Budgeted ISF											
Water Utility	59							6,695,499	6,695,499	5,774,039	3,980,160
Sewer Utility	60							3,767,151	3,767,151	3,756,235	4,686,324
Electric Utility	61								0	0	0
Gas Utility	62								0	0	0
Airport	63								0	0	0
Landfill/Garbage	64							90,072	90,072	97,657	67,740
Transit	65							1,141,302	1,141,302	1,015,447	838,423
Cable TV, Internet & Telephone	66								0	0	0
Housing Authority	67								0	0	0
Storm Water Utility	68							837,855	837,855	954,875	1,925,713
Other Business Type (city hosp., ISF, parking, etc.)	69							40,291	40,291	42,173	43,050
Enterprise DEBT SERVICE	70							2,341,782	2,341,782	1,690,659	2,129,971
Enterprise CAPITAL PROJECTS	71							6,487,550	6,487,550	9,782,349	3,769,073
Enterprise TIF CAPITAL PROJECTS	72								0	0	0
TOTAL Business Type Expenditures (lines 59 - 72)	73							21,401,502	21,401,502	23,113,434	17,440,454
TOTAL ALL EXPENDITURES (lines 58 + 73)	74	18,466,806	9,480,024	628,743	7,031,413	27,498,842	0	21,401,502	84,507,330	77,008,852	54,224,904
Regular Transfers Out	75	391,375	11,021,819			5,772,103		2,059,424	19,244,721	16,223,769	14,446,200
Internal TIF Loan / Repayment Transfers Out	76			453,721					453,721	759,059	539,094
Total ALL Transfers Out	77	391,375	11,021,819	453,721	0	5,772,103	0	2,059,424	19,698,442	16,982,828	14,985,294
Total Expenditures & Fund Transfers Out (lines 74+77)	78	18,858,181	20,501,843	1,082,464	7,031,413	33,270,945	0	23,460,926	104,205,772	93,991,680	69,210,198
Ending Fund Balance June 30	79	6,904,991	13,269,573	18,357	300,913	1,066,035	0	33,266,950	54,826,819	69,192,114	65,234,236

REVENUES DETAIL
City Name: MARSHALLTOWN
Fiscal Year July 1, 2023 - June 30, 2024

		GENERAL	SPECIAL REVENUES	TIF SPECIAL REVENUES	DEBT SERVICE	CAPITAL PROJECTS	PERMANENT	PROPRIETARY	BUDGET 2024	RE-ESTIMATED 2023	ACTUAL 2022
REVENUES & OTHER FINANCING SOURCES											
Taxes Levied on Property	1	7,652,970	3,044,813		2,080,282	558,845			13,336,910	12,999,858	12,517,872
Less: Uncollected Property Taxes - Levy Year	2								0	0	0
Net Current Property Taxes (line 1 minus line 2)	3	7,652,970	3,044,813		2,080,282	558,845			13,336,910	12,999,858	12,517,872
Delinquent Property Taxes	4								0	0	43,820
TIF Revenues	5			1,114,341					1,114,341	485,255	922,123
Other City Taxes:											
Utility Tax Replacement Excise Taxes	6	934,530	372,666		245,692	68,398			1,621,286	1,252,637	1,403,092
Utility francise tax (Iowa Code Chapter 364.2)	7	190,000							190,000	190,000	189,316
Parimutuel wager tax	8								0	0	0
Gaming wager tax	9								0	0	0
Mobile Home Taxes	10	7,500			700				8,200	9,000	12,402
Hotel/Motel Taxes	11	600,000							600,000	600,000	486,552
Other Local Option Taxes	12		3,700,000						3,700,000	3,700,000	4,655,923
Subtotal - Other City Taxes (lines 6 thru 12)	13	1,732,030	4,072,666		246,392	68,398			6,119,486	5,751,637	6,747,285
Licenses & Permits	14	358,550						5200	363,750	333,855	265,789
Use of Money & Property	15	250,656	208,205	200	5,500	167,530		177,805	809,896	1,263,725	685,968
Intergovernmental:											
Federal Grants & Reimbursements	16		4,386,452			947,000		350,163	5,683,615	14,462,843	6,336,710
Road Use Taxes	17		3,490,000						3,490,000	3,490,000	3,813,251
Other State Grants & Reimbursements	18	585,942	872,004		86,984	223,617		245,139	2,013,686	4,009,960	1,528,943
Local Grants & Reimbursements	19	102,500	260,000			594,391			956,891	914,591	297,817
Subtotal - Intergovernmental (lines 16 thru 19)	20	688,442	9,008,456	0	86,984	1,765,008		595,302	12,144,192	22,877,394	11,976,721
Charges for Fees & Service:											
Water Utility	21							7,868,778	7,868,778	7,287,409	6,880,380
Sewer Utility	22							7,998,000	7,998,000	7,948,000	7,915,917
Electric Utility	23								0	0	0
Gas Utility	24								0	0	0
Parking	25	75,600							75,600	75,350	48,986
Airport	26	7,000							7,000	7,000	5,562
Landfill/Garbage	27	150,000						70,000	220,000	221,017	252,323
Hospital	28								0	0	0
Transit	29							129,300	129,300	124,520	122,878
Cable TV, Internet & Telephone	30								0	0	0
Housing Authority	31								0	0	0
Storm Water Utility	32							1,350,000	1,350,000	1,350,700	1,351,252
Other Fees & Charges for Service	33	947,204	25					48,000	995,229	798,763	1,143,945
Subtotal - Charges for Service (lines 21 thru 33)	34	1,179,804	25		0	0	0	17,464,078	18,643,907	17,812,759	17,721,243
Special Assessments	35					500			500	500	537
Miscellaneous	36	24,645	1,355,558			35,000		32,400	1,447,603	1,486,581	1,079,928
Other Financing Sources:											
Regular Operating Transfers In	37	7,146,780	633,150		4,379,633	6,810,158		275,000	19,244,721	16,223,769	14,446,200
Internal TIF Loan Transfers In	38	127,915			325,806				453,721	759,059	539,094
Subtotal ALL Operating Transfers In	39	7,274,695	633,150	0	4,705,439	6,810,158	0	275,000	19,698,442	16,982,828	14,985,294
Proceeds of Debt (Excluding TIF Internal Borrowing)	40					11,356,000		4,795,050	16,151,050	17,849,739	9,422,388
Proceeds of Capital Asset Sales	41	200	200			10,000			10,400	105,427	333,024
Subtotal-Other Financing Sources (lines 38 thru 40)	42	7,274,895	633,350	0	4,705,439	18,176,158	0	5,070,050	35,859,892	34,937,994	24,740,706
Total Revenues except for beginning fund balance (lines 3, 4, 5, 13, 14, 15, 20, 34, 35, 36, & 41)	43	19,161,992	18,323,073	1,114,541	7,124,597	20,771,439	0	23,344,835	89,840,477	97,949,558	76,701,992
Beginning Fund Balance July 1	44	6,601,180	15,448,343	-13,720	207,729	13,565,541	0	33,383,041	69,192,114	65,234,236	57,742,442
TOTAL REVENUES & BEGIN BALANCE (lines 42+43)	45	25,763,172	33,771,416	1,100,821	7,332,326	34,336,980	0	56,727,876	159,032,591	163,183,794	134,444,434

ADOPTED BUDGET SUMMARY
City Name: MARSHALLTOWN
Fiscal Year July 1, 2023 - June 30, 2024

		GENERAL	SPECIAL REVENUES	TIF SPECIAL REVENUES	DEBT SERVICE	CAPITAL PROJECTS	PERMANENT	PROPRIETARY	BUDGET 2024	RE-ESTIMATED 2023	ACTUAL 2022
Revenues & Other Financing Sources											
Taxes Levied on Property	1	7,652,970	3,044,813		2,080,282	558,845			13,336,910	12,999,858	12,517,872
Less: Uncollected Property Taxes-Levy Year	2	0	0		0	0			0	0	0
Net Current Property Taxes	3	7,652,970	3,044,813		2,080,282	558,845			13,336,910	12,999,858	12,517,872
Delinquent Property Taxes	4	0	0		0	0			0	0	43,820
TIF Revenues	5			1,114,341					1,114,341	485,255	922,123
Other City Taxes	6	1,732,030	4,072,666		246,392	68,398			6,119,486	5,751,637	6,747,285
Licenses & Permits	7	358,550	0					5,200	363,750	333,855	265,789
Use of Money and Property	8	250,656	208,205	200	5,500	167,530	0	177,805	809,896	1,263,725	685,968
Intergovernmental	9	688,442	9,008,456	0	86,984	1,765,008		595,302	12,144,192	22,877,394	11,976,721
Charges for Fees & Service	10	1,179,804	25		0	0	0	17,464,078	18,643,907	17,812,759	17,721,243
Special Assessments	11	0	0		0	500		0	500	500	537
Miscellaneous	12	24,645	1,355,558		0	35,000	0	32,400	1,447,603	1,486,581	1,079,928
Sub-Total Revenues	13	11,887,097	17,689,723	1,114,541	2,419,158	2,595,281	0	18,274,785	53,980,585	63,011,564	51,961,286
Other Financing Sources:											
Total Transfers In	14	7,274,695	633,150	0	4,705,439	6,810,158	0	275,000	19,698,442	16,982,828	14,985,294
Proceeds of Debt	15	0	0	0	0	11,356,000		4,795,050	16,151,050	17,849,739	9,422,388
Proceeds of Capital Asset Sales	16	200	200	0	0	10,000	0	0	10,400	105,427	333,024
Total Revenues and Other Sources	17	19,161,992	18,323,073	1,114,541	7,124,597	20,771,439	0	23,344,835	89,840,477	97,949,558	76,701,992
Expenditures & Other Financing Uses											
Public Safety	18	10,445,390	308,157	0			0		10,753,547	10,670,182	9,966,987
Public Works	19	2,231,879	2,530,468	0			0		4,762,347	5,186,787	5,039,769
Health and Social Services	20	0	1,583,162	0			0		1,583,162	1,671,356	611,572
Culture and Recreation	21	3,418,173	1,212,018	0			0		4,630,191	4,345,191	3,226,370
Community and Economic Development	22	641,935	3,835,356	628,743			0		5,106,034	4,678,209	3,491,587
General Government	23	1,729,429	10,863	0			0		1,740,292	1,691,689	1,424,725
Debt Service	24	0	0	0	7,031,413		0		7,031,413	5,846,502	5,287,543
Capital Projects	25	0	0	0		27,498,842	0		27,498,842	19,805,502	7,735,897
Total Government Activities Expenditures	26	18,466,806	9,480,024	628,743	7,031,413	27,498,842	0		63,105,828	53,895,418	36,784,450
Business Type Proprietray: Enterprise & ISF	27							21,401,502	21,401,502	23,113,434	17,440,454
Total Gov & Bus Type Expenditures	28	18,466,806	9,480,024	628,743	7,031,413	27,498,842	0	21,401,502	84,507,330	77,008,852	54,224,904
Total Transfers Out	29	391,375	11,021,819	453,721	0	5,772,103	0	2,059,424	19,698,442	16,982,828	14,985,294
Total ALL Expenditures/Fund Transfers Out	30	18,858,181	20,501,843	1,082,464	7,031,413	33,270,945	0	23,460,926	104,205,772	93,991,680	69,210,198
Excess Revenues & Other Sources Over	31										
(Under) Expenditures/Transfers Out	32	303,811	-2,178,770	32,077	93,184	-12,499,506	0	-116,091	-14,365,295	3,957,878	7,491,794
Beginning Fund Balance July 1	33	6,601,180	15,448,343	-13,720	207,729	13,565,541	0	33,383,041	69,192,114	65,234,236	57,742,442
Ending Fund Balance June 30	34	6,904,991	13,269,573	18,357	300,913	1,066,035	0	33,266,950	54,826,819	69,192,114	65,234,236

LONG TERM DEBT SCHEDULE - LT DEBT1
GENERAL OBLIGATION BONDS, TIF BONDS, REVENUE BONDS, LOANS, LEASE-PURCHASE PAYMENTS

Debt Name		Amount of Issue	Type of Debt Obligation	Debt Resolution Number	Principal Due FY	Interest Due FY	Total Obligation Due FY	Bond Reg./ Paying Agent Fees Due FY	Reductions due to Refinancing or Prepayment of Certified Debt	Paid from Funds OTHER THAN Current Year Debt Service Taxes	Amount Paid Current Year Debt Service Levy
31129 2012A General Obligation Bond	1	5,000,000	GO	2012-055	400,000	18,563	418,563	500		183,438	235,625
31134: 2015 General Obligation Corporate Purpose Bonds	2	2,000,000	GO	2015-193	225,000	5,850	230,850	500		59,908	171,442
31135: 2016A General Obligation Bonds	3	5,000,000	GO	2016-147	580,000	49,200	629,200	500		192,296	437,404
31136: 2016B General Obligation Bonds (Pol/Fire Bldg)	4	4,780,000	GO	2016-228	275,000	50,100	325,100	500			325,600
31137 2017 General Obligation Bonds (Pol&Fire Bldg)	5	12,720,000	GO	2017-246	515,000	327,000	842,000	500			842,500
31138 2018 General Obligation Bonds	6	2,400,000	GO	2018-201	350,000	68,700	418,700	600			419,300
31139: 2019 General Obligation and Refunded 2011	7	8,830,000	GO	2019-312	1,160,000	121,400	1,281,400	600		504,518	777,482
31140: 2020A General Obligation and Refunded	8	9,590,000	GO	2020-257	790,000	72,350	862,350	600		431,670	431,280
31141: 2020B General Obligation (Airport)	9	2,030,000	GO	2020-258	210,000	22,225	232,225	600			232,825
31142 2021 General Obligation Bonds	10	9,130,000	GO	2021-334	695,000	170,600	865,600	600			866,200
31143 2022A General Obligation (Tax Exempt)	11	9,555,000	GO	2022-326	210,000	565,781	775,781	600			776,381
31144 2022B General Obligation (Taxable) - D&D	12	610,000	GO	2022-327	100,000	42,944	142,944	600			143,544
	13		-				0				0
Iowa Econ Develop Authority Shared Wall Loan	14	500,000	NON-GO				0				0
	15		-				0				0
52012: 2013 Sewer Revenue Improvement	16	3,700,000	NON-GO	2013-096	269,000	27,943	296,943	500		297,443	0
59008: 2020 Sewer Revenue Refunded 2012,2014	17	5,065,000	NON-GO	2019-339	530,000	59,682	589,682	600		590,282	0
59009: 2021 Sewer Revenue refunded 2015	18	4,335,000	NON-GO	2021-070	538,000	34,133	572,133	600		572,733	0
	19		-				0				0
59016002: 2021A Sewer Rev Improve. & Refunding - SRF Manhole/Point Rep	20	3,646,000	NON-GO	2021-242	176,000	36,586	212,586			212,586	0
SAN21001&WPC21001: 2023 Sewer Rev Improve -SRF CIPP & Headworks	21	13,125,000	NON-GO	2023-007	540,000	128,738	668,738			668,738	0
	22		-				0				0
Local Options sales tax $3.7million times 78% property tax relief	23		GO	None			0			2,886,000	-2,886,000
	24		-				0				0
Local Option sales tax fund balance	25		GO	None			0			447,609	-447,609
	26		-				0				0
	27		-				0				0
	28		-				0				0
	29		-				0				0
	30		-				0				0
TOTALS					7,563,000	1,801,795	9,364,795	8,400	0	7,047,221	2,325,974

LONG TERM DEBT SCHEDULE - GRAND TOTALS

GENERAL OBLIGATION BONDS, TIF BONDS, REVENUE BONDS, LOANS, LEASE-PURCHASE PAYMENTS

	Principal Due FY 2024	Interest Due FY 2024	Total Obligation Due FY 2024	Bond Reg./ Paying Agent Fees Due FY 2024	Reductions due to Refinancing or Prepayment of Certified Debt	Paid from Sources OTHER THAN Budget Year Debt Service Levy	Amount Paid Budget Year Debt Service Levy
GO - TOTAL	5,510,000	1,514,713	7,024,713	6,700	0	4,705,439	2,325,974
NON GO - TOTAL	2,053,000	287,082	2,340,082	1,700	0	2,341,782	0
GRAND - TOTAL	7,563,000	1,801,795	9,364,795	8,400	0	7,047,221	2,325,974

TRANSFERS BETWEEN FUNDS

Fund	Transferred From	Fund	Transferred To	Explanation of activity	2023-2024
001	General fund	110	Road use tax fund	Prior year Expenses Recorded in the RUT Fund that are Gen Fund Expenditures	$ -
001	General fund	355	D&D Fund	Landfill revenue in excess of expenses for prior fiscal year	$ 20,000
001	General fund	690	Transit	Property taxes collected in general (as required) with the cash being transferred to the transit enterprise fund	$ 275,000
030	Capital Reserve	110	Road use tax fund	PD and P&R portion of Project purchased in RUT	$ 8,100
030	Capital Reserve	312	Airport Project Fund	City portion of Airport Grant Project	$ 50,000
031	Building Maint Fund	133	Grants: Other Federal	City Portion of Coliseum Generator Project	$ 26,775
031	Building Maint Fund	312	Airport Project Fund	Airport Sewer Repairs	$ 11,500
110	Road use tax fund	001	General	Reimbursement to general fund for employee wages associated with the public works department	$ 1,176,363
110	Road use tax fund	311	RISE Street Grants	Edgewood Ext Project Costs	
110	Road use tax fund	395	Economic Development Project Fund	Various street projects	
110	Road use tax fund	362	2020 GO Bonds & Projects	Railroad Quite Zone Expenses	$ 642,803
112	Employee benefits fund	001	General	Reimbursement to general fund for employee benefits: FICA, IPERS, group health insurance, workman 's comp, retirees health savings contributions (non-union payout in lieu of sick and vacation based upon guidelines for payouts)	$ 3,070,871
117	Police & fire retirement	001	General	Reimbursement to general fund for civil service retirement payments to Municipal Fire & Police Retirement System of Iowa (MFPRSI)	$ 1,180,148
119	Emergency Levy Fund	001	General	Property taxes collected in Emergency fund with the cash being transferred to the general fund	$ 262,974
121	LOST - Council Desig	001	General	FY 23: Council Designated: Reimbursement of Inflationary Payment. FY24: Council Designated to offset General Fund deficit	$ 328,526
121	LOST - Council Desig	010	Cash Flow Reserve Fund	Transfer to have Reserve Fund at 16% in FY23 and 17% in FY24, of Fund 001 budgeted expenses	$ 288,000
121	LOST - Council Desig	132	Grants: State and Local	Downtown Revitalization (DTR) grant	$ 375,000
121	LOST - Council Desig	183	Economic Development Project Fund	Clear deficit in fund now that property has sold	
121	Local Option Sales Tax	200	Debt Service Fund	Property tax relief from local option sales tax (LOST) collected to pay for bond payments	$ 3,333,609
121	LOST - Storm Sewer/Street Improvements	311	RISE Street Grants	City Portion of Project Costs, Edgewood Ext	$ 25,000
121	LOST - Council Desig	340	Bike Trail Fund	Bike Trail Engineering Expenses	

Fund	Transferred From	Fund	Transferred To	Explanation of activity	2023-2024
121	LOST - Storm Sewer/Street Improvements	363	2021 GO Bonds & Projects	Street Improvement Projects	
121	LOST - Storm Sewer/Street Improvements	364	2022 GO Bonds & Projects	Street Improvement Projects	$ 115,250
121	LOST - Storm Sewer/Street Improvements	395	Economic Development Project Fund	South 7th Ave Ext Proj Costs	
121	LOST - Council Desig	611	WPCP Revenue Fund	Council Desiginated: Reimbursement of Inflationary Payment	
121	LOST - Council Desig	690	Transit	Council Desiginated: Reimbursement of Inflationary Payment	
121	LOST - Council Desig	740	Storm Water Fund	Council Desiginated: Reimbursement of Inflationary Payment	
125	TIF tax collection fund	001	General	MCBD, Chamber, and façade/code grant expenses paid by general fund. Cash is transferred from TIF collection fund where the property taxes are collected.	$ 127,915
125	TIF tax collection fund	200	Debt Service Fund	To Pay for TIF portion of GO Debt	$ 325,806
130	City Tort Liabilty	140	PR Donation Fund	Remaining Insurance Funds	
130	City Tort Liabilty	156	Fire Donation Fund	Remaining Insurance Funds	
130	City Tort Liabilty	170	Library Donation Fund	Remaining Insurance Funds	
130	City Tort Liabilty	312	Airport Project Fund	Remaining Insurance Funds	
130	City Tort Liabilty	615	WPCP Plant & Improvement	Insurance Reimbursment For Project Expenses	
140	PR Donation Fund	133	Undesignated Federal Grants	Portion of Coliseum Generator Project	$ 82,275
140	PR Donation Fund	760	Aquatic Center Concession	Reimbursement of Aquatic Center Painting Costs	
145	Tornado Fund	110	Road use tax fund	Purchase of New Drump Truck, replacement of truck used during Tornado clean up.	$ 141,000
145	Tornado Fund	130	City Tort Liability	Tornado Related Expenditures	
149	FEMA- Winds	130	City Tort Liability	Derecho Related Expenditures	
300	CIP Tax Collection Fund	030	Capital Improvement Reserve Fund	Capital expenditures paid from governmental capital reserve fund. Cash is transferred from the capital improvement levy funds where the property taxes were receipted.	$ 696,423
300	CIP Tax Collection Fund	32	CIP Large Equipment	Capital expenditures paid from governmental capital reserve fund. Cash is transferred from the capital improvement levy funds where the property taxes were receipted. For future fire truck purchase.	$ 94,086
360	2019 GO Bonds & Projects	110	Road use tax fund	Move Bond Proceeds to Corresponding Bond Projects	

Fund	Transferred From	Fund	Transferred To	Explanation of activity	2023-2024
360	2019 GO Bonds & Projects	363	2021 GO Bonds	Move Bond Proceeds to Corresponding Bond Projects	
360	2019 GO Bonds & Projects	395	Economic Development Project Fund	Move Bond Proceeds to Corresponding Bond Projects	
363	2021 GO Bonds & Projects	110	Road use tax fund	Move Bond Proceeds to Corresponding Bond Projects	
363	2021 GO Bonds & Projects	360	2019 GO Bonds & Projects	Move Bond Proceeds to Corresponding Bond Projects	
363	2021 GO Bonds & Projects	395	Economic Development Project Fund	Move Bond Proceeds to Corresponding Bond Projects	$ 7,000
364	2022 GO Bonds & Projects	363	2021 GO Bonds & Projects	Move Bond Proceeds to Corresponding Bond Projects	$ 2,463,464
389	American Rescue Plan	001	General	Cover Budgeted General Fund Deficit	$ 49,389
389	American Rescue Plan	311	RISE Street Grants	Edgewood Ext Project Costs	
389	American Rescue Plan	363	2021 GO Bonds & Projects	State Street Reconstruction Project costs	$ 2,461,741
610	WPCP	200	Debt Service Fund	Fund WPCP GO Bond Payments	$ 504,518
611	WPCP Rev Fund	363	2021 GO Bonds & Projects	Sanitary Sewer Project Costs	$ 523,900
611	WPCP Rev Fund	395	Economic Development Project Fund	Sanitary Sewer Project Costs	
615	WPCP Plant & Improvement	364	2022 GO Bonds & Projects	Sanitary Sewer Project Costs	$ 489,500
740	Storm Sewer Utility	200	Debt Service Fund	Fund Storm Sewer GO Bond Payments	$ 541,506
740	Storm Sewer Utility	395	Economic Development Project Fund	Storm Sewer Costs for Project	
				TOTAL FOR BUDGET SUBMISSION	**$ 19,698,442**
610/611	WPCP funds	610, 612,615, 617	WPCP funds	Cover consolidation of project funds within WPCP series and move dollars from WPCP revenue fund to WPCP expenditure fund	$ 9,111,901
				TOTALS INCLUDING INTERFUND TRANSFERS	**$ 28,810,343**

MARSHALLTOWN
IOWA

Joel Greer, Mayor
Jessica Kinser, City Administrator
24 North Center Street
Marshalltown, IA 50158
PH 641.754.5701 | FX 641.754.5717

TO: Mayor and City Council
FROM: Diana Steiner, Finance Director
DATE: April 6, 2023
RE: Public Hearing and resolution to approve FY24 Budget and Certification of Property Taxes

Strategic Plan:

☐ Strategy 1: Expand and improve development in the community.
☐ Strategy 2: Enhance Marshalltown's public image.
☒ Strategy 3: Continually improve and sustain the City's infrastructure, organization, and services.
☐ Strategy 4: Partner with citizens, for-profit, non-profit, and others to improve quality of life.

Plan Objective: N/A

Recommendation: Action must be taken by Council to adopt the FY24 budget documents and certification of property taxes. The FY24 transfers between funds also need approved by Council**.**

Description/Background: The decisions Council has made during the January through March Council meetings have been incorporated into the official budget documents and the public hearing has been set for April 10, 2023. Changes can still be made at the hearing as long as the levy and expenditures are lower than what was published. In summary, the FY24 General Fund 001 budget is balanced with $328,526 of Council Designated Local Option Sales Tax (LOST) and $49,389 of American Rescue Plan funds, which maintains staffing and operations at the same level. The proposed tax levy of $16.00 for every $1,000 of taxable value maintains financial resources for future fiscal years, to prevent large tax levy fluctuations for future fiscal years. The total budget also proposes borrowing more than $9 million in fiscal year 2024 to support projects like street improvements and downtown redevelopment, which will help increase valuations and other revenues, like Local Option Sales Tax.

While the FY23 budget is showing on the budget forms, we are not doing a formal budget amendment at this time and will address this at a later date. Instead, the amounts have been re-estimated to show the projected activity.

Six reports are included in the packet which comprise the FY24 budget and background information:

The **"RESOLUTION ADOPTING THE BUDGET AND CERTIFYING TAXES FOR FY24 AND TRANSFERS"** document is the resolution and the official budget document (noted as pages 1-13) that will be certified with the County Auditor after the public hearing and Council approval on April 10, 2023. The Notice of Public Hearing (first page) was published in the Times Republican newspaper on March 31, 2023. The report is showing the proposed property tax levy rate of $16.00000 per $1,000 valuation for regular property and $3.00375 for agricultural land. Page 2 is the breakdown of each of the individual levies into the total proposed tax levy of $16.00. As background, below is the history of property tax levies since FY2019:

- FY24: $16.00 (proposed)
- FY23: $15.36
- FY22: $15.36
- FY21: $15.38
- FY20: $15.38
- FY19: $15.28

The remainder of the report includes updated fund balances, the specific levy for the Marshall County Emergency Tax Levy, re-estimated revenues and expenses for FY23 (to be amended in May), the proposed revenues and expenditures for FY24, long-term debt schedule and a long-term debt summary. Please note that $2,886,000 of LOST is reflected in the long-term debt schedule as property tax relief, along with an additional $447,609 of LOST fund balance to achieve the $16.00 tax levy.

The last 3 pages of this document reflects the money budgeted to be transferred between funds and the purpose.

The **"Revenues FY22 to FY24"** comparison report has been provided to show what is included in the different categories and the differences between the FY23 re-estimated and the FY24 proposed budget.

The **"Expenses FY22 to FY24"** comparison report has been provided to show the difference between the FY23 re-estimated and proposed FY24 budget.

The **"Budget Comparison Report all budgeted funds and functions"** report is organized first by funds and then by each function showing the revenue and expense. NOTE: THIS IS 158 PAGES.

The **Cash Balances Report** indicates the actual ending cash balances at 6/30/22, the activity for FY23 & FY24 with the projected ending cash balances for each fiscal year.

The "Marshalltown Water Works Budget" report is included since the City's official budget that is submitted to the County includes them. Their re-estimated revenues are $7,351,409 for FY23 and $7, 932,778 for FY24. Expenditures are $5,774,039 for FY23 and $6,695,499 for FY24. Their public hearing was Feb. 21, 2023 and the Board of Trustees approved. The City's official budget documents include Marshalltown Water Works under the Proprietary column.

MARSHALLTOWN MORE THAN EVER

City of Marshalltown, IA

Budget Comparison Report

Account Summary

Account Number		2021-2022 Total Activity	2022-2023 Total Budget	2022-2023 YTD Activity Through Feb	Parent Budget 2022-2023 FY2023 Amend	Comparison 1 Budget 2023-2024 FY2024 Dept Request	Comparison 1 to Parent Budget Increase / (Decrease)	%
Fund: 001 - GENERAL FUND								
Function: 1010 - Police Operations/Crime Prevention								
Revenue								
001.1010.4292.000	BIKE LICENSE/REGISTRATN	75.00	100.00	60.00	100.00	100.00	0.00	0.00%
001.1010.4326.000	STATE REIMB- IVH POLICE	39,147.00	39,147.00	39,147.00	39,147.00	39,147.00	0.00	0.00%
001.1010.4330.000	STATE OPER GRANT	0.00	2,775.00	0.00	2,775.00	2,775.00	0.00	0.00%
001.1010.4410.000	POLICE SERVICES	8,442.31	7,000.00	6,337.28	7,000.00	7,000.00	0.00	0.00%
001.1010.4411.000	POLICE SECURITY SERVICES	18,522.50	12,000.00	8,592.50	12,000.00	12,000.00	0.00	0.00%
001.1010.4412.000	Police - False Alarm	3,110.67	3,000.00	1,973.80	3,000.00	3,000.00	0.00	0.00%
001.1010.4494.000	COURT ORDER-CHRG FOR SER'	0.00	0.00	183.00	0.00	0.00	0.00	0.00%
001.1010.4498.000	Police - Towing Admin Fee	196.00	500.00	250.00	500.00	500.00	0.00	0.00%
001.1010.4510.000	COURT FINES	17,581.73	20,000.00	14,804.38	20,000.00	20,000.00	0.00	0.00%
001.1010.4515.000	COURT ORDERED-RESTITUTIOI	7,811.14	4,000.00	3,109.99	4,000.00	4,000.00	0.00	0.00%
001.1010.4616.000	INT CHRGD - ACCTS REC	640.19	0.00	450.23	150.00	0.00	-150.00	-100.00%
001.1010.4820.000	POLICE DEPT CONTRIBS	0.00	0.00	5,000.00	5,000.00	0.00	-5,000.00	-100.00%
001.1010.4875.000	RFNDS/REIMB: POLICE	9,035.17	4,000.00	4,795.83	5,000.00	4,000.00	-1,000.00	-20.00%
001.1010.4876.000	MISC REV: POLICE	61.33	500.00	0.00	500.00	500.00	0.00	0.00%
	Total Revenue:	**104,623.04**	**93,022.00**	**84,704.01**	**99,172.00**	**93,022.00**	**-6,150.00**	**-6.20%**
Expense								
001.1010.5010.010	REGULAR-NON UNION	666,002.90	696,251.00	434,272.95	672,225.00	713,132.00	40,907.00	6.09%
001.1010.5010.020	REGULAR-POLICE UNION	2,307,414.49	2,540,141.00	1,493,525.21	2,412,199.00	2,523,171.00	110,972.00	4.60%
001.1010.5020.010	OVERTIME-NON UNION	52.68	9,200.00	194.90	9,200.00	9,200.00	0.00	0.00%
001.1010.5020.020	OVERTIME-POLICE UNION	228,701.24	150,000.00	148,827.92	230,000.00	150,000.00	-80,000.00	-34.78%
001.1010.5021.010	EXTRA DUTY-NON UNION	1,215.98	500.00	1,575.00	2,000.00	500.00	-1,500.00	-75.00%
001.1010.5021.020	EXTRA DUTY-POLICE UNION	15,902.99	12,000.00	8,522.50	12,000.00	12,000.00	0.00	0.00%
001.1010.5021.070	EXTRA DUTY OVERTIME	0.00	500.00	0.00	500.00	500.00	0.00	0.00%
001.1010.5030.070	PART-TIME TEMPORARY	500.00	0.00	0.00	0.00	0.00	0.00	0.00%
001.1010.5050.060	PART-TIME REGULAR	6,999.67	10,787.00	6,200.12	11,470.00	11,537.00	67.00	0.58%
001.1010.5056.040	OTHR DEPT-PPME UNION	3,496.93	0.00	862.59	0.00	0.00	0.00	0.00%
001.1010.5057.010	CAR REIMB-NON UNION	4,333.42	4,333.00	2,333.38	4,000.00	4,333.00	333.00	8.33%
001.1010.5060.020	TERM PAYOUTS-POLICE UNIOI	15,216.56	0.00	25,188.96	0.00	0.00	0.00	0.00%
001.1010.5061.010	RHSA PAYOUTS-NON UNION	0.00	0.00	30,013.52	30,014.00	0.00	-30,014.00	-100.00%
001.1010.5101.010	SOCIAL SECURITY-NON UNION	2,860.86	3,156.00	2,005.00	3,215.00	3,316.00	101.00	3.14%

Budget Comparison Report

Account Number		2021-2022 Total Activity	2022-2023 Total Budget	2022-2023 YTD Activity Through Feb	Parent Budget 2022-2023 FY2023 Amend	Comparison 1 Budget 2023-2024 FY2024 Dept Request	Comparison 1 to Parent Budget Increase / (Decrease)	%
001.1010.5101.020	SOCIAL SECURITY-POLICE UNIC	8,370.90	9,408.00	6,265.63	9,710.00	10,046.00	336.00	3.46%
001.1010.5101.040	SOCIAL SECURITY-PPME UNIOI	203.52	0.00	52.22	0.00	0.00	0.00	0.00%
001.1010.5101.060	SOCIAL SECURITY-PT REGULAR	433.96	669.00	384.41	711.00	715.00	4.00	0.56%
001.1010.5101.070	SOCIAL SECURITY-PT TEMP	31.00	0.00	0.00	0.00	0.00	0.00	0.00%
001.1010.5102.010	MEDICARE-NON UNION	9,441.99	10,158.00	6,190.09	9,806.00	10,403.00	597.00	6.09%
001.1010.5102.020	MEDICARE-POLICE UNION	37,553.85	36,832.00	24,528.66	38,312.00	38,457.00	145.00	0.38%
001.1010.5102.040	MEDICARE-PPME UNION	47.61	0.00	12.20	0.00	0.00	0.00	0.00%
001.1010.5102.060	MEDICARE-PT REGULAR	101.54	156.00	89.91	166.00	167.00	1.00	0.60%
001.1010.5102.070	MEDICARE-TEMPORARY	7.25	0.00	0.00	0.00	0.00	0.00	0.00%
001.1010.5111.010	IPERS-NON UNION	4,563.24	4,805.00	3,140.43	4,801.00	5,048.00	247.00	5.14%
001.1010.5111.020	IPERS-POLICE UNION	14,040.28	14,324.00	9,564.03	14,501.00	15,295.00	794.00	5.48%
001.1010.5111.040	IPERS-PPME UNION	330.11	0.00	81.44	0.00	0.00	0.00	0.00%
001.1010.5111.060	IPERS-PT REGULAR	660.77	1,018.00	538.08	1,036.00	1,089.00	53.00	5.12%
001.1010.5113.010	RETIREMENT-NON UNION	161,587.16	154,239.00	94,130.67	146,834.00	151,589.00	4,755.00	3.24%
001.1010.5113.020	RETIREMENT-POLICE UNION	594,301.78	589,589.00	339,545.26	548,648.00	572,236.00	23,588.00	4.30%
001.1010.5121.010	GRP INSUR-NON UNION	88,517.10	98,771.00	60,842.11	103,854.00	110,146.00	6,292.00	6.06%
001.1010.5121.020	GRP INSUR-POLICE UNION	411,536.79	483,950.00	246,964.80	413,003.00	493,998.00	80,995.00	19.61%
001.1010.5121.040	GRP INSUR-PPME UNION	904.37	0.00	207.64	0.00	0.00	0.00	0.00%
001.1010.5122.000	RETIREES GRP HLTH INS	102,347.00	110,492.00	77,430.72	118,500.00	135,155.00	16,655.00	14.05%
001.1010.5123.010	WORKCOMP-NON UNION	8,760.69	9,118.00	6,050.93	8,684.00	9,323.00	639.00	7.36%
001.1010.5123.020	WORKCOMP-POLICE UNION	35,647.86	33,685.00	22,748.35	34,643.00	35,127.00	484.00	1.40%
001.1010.5123.040	WORKCOMP-PPME UNION	44.45	0.00	19.75	0.00	0.00	0.00	0.00%
001.1010.5123.060	WORKCOMP-PT REGULAR	99.67	267.00	141.13	272.00	286.00	14.00	5.15%
001.1010.5123.070	WORKCOMP-TEMPORARY	7.00	0.00	0.00	0.00	0.00	0.00	0.00%
001.1010.5132.000	CLOTHING EXPENSE	22,005.68	21,000.00	21,970.62	21,000.00	21,000.00	0.00	0.00%
001.1010.5151.000	PHYSICALS/IMMUNIZATIONS	1,709.00	4,000.00	4,353.50	6,000.00	4,000.00	-2,000.00	-33.33%
001.1010.5192.020	UNEMPLOYMENT-POLICE UNI(	191.00	0.00	0.00	0.00	0.00	0.00	0.00%
001.1010.5210.000	ADVERTISING & LEGAL PUB	373.27	1,500.00	229.08	1,500.00	1,500.00	0.00	0.00%
001.1010.5230.000	CONSULTING & PROF FEES	40,126.74	4,200.00	7,318.56	7,000.00	4,200.00	-2,800.00	-40.00%
001.1010.5250.000	COURT, RECORD & FILING FEE!	37.00	0.00	0.00	0.00	0.00	0.00	0.00%
001.1010.5280.000	DUES, MEMBER, SUBSCRIPTN	21,245.98	19,700.00	24,008.19	23,000.00	23,000.00	0.00	0.00%
001.1010.5290.000	INSURANCE - GENERAL	10,414.23	11,761.00	0.00	11,937.00	14,324.00	2,387.00	20.00%
001.1010.5300.000	INSURANCE - TORT LIAB	44,999.86	51,379.00	0.00	50,226.00	60,271.00	10,045.00	20.00%
001.1010.5321.000	K9 EXPENSES	531.87	1,000.00	0.00	1,000.00	1,000.00	0.00	0.00%
001.1010.5342.000	CONTRACT-OUTSIDE HELP	2,297.38	250.00	843.20	750.00	250.00	-500.00	-66.67%
001.1010.5344.000	CONTRACT-MAINTENANCE	18,506.87	23,747.00	12,719.52	23,747.00	23,747.00	0.00	0.00%
001.1010.5347.000	CONTRACT-SOFTWARE MAINT	33,493.58	34,000.00	32,236.62	34,000.00	34,000.00	0.00	0.00%
001.1010.5359.000	TOWING SERVICES	480.00	500.00	1,683.00	1,500.00	500.00	-1,000.00	-66.67%
001.1010.5360.000	POSTAGE & SHIPPING	1,107.56	700.00	433.81	700.00	700.00	0.00	0.00%

Budget Comparison Report

Account Number		2021-2022 Total Activity	2022-2023 Total Budget	2022-2023 YTD Activity Through Feb	Parent Budget 2022-2023 FY2023 Amend	Comparison 1 Budget 2023-2024 FY2024 Dept Request	Comparison 1 to Parent Budget Increase / (Decrease)	%
001.1010.5370.000	PRINTING & BINDING	578.12	500.00	877.31	500.00	500.00	0.00	0.00%
001.1010.5380.000	RENTS & LEASES	14,411.34	14,500.00	14,411.34	14,500.00	14,500.00	0.00	0.00%
001.1010.5410.000	REPAIRS & MAINTENANCE	10,285.87	18,000.00	8,265.20	18,000.00	18,000.00	0.00	0.00%
001.1010.5431.000	INTERPRETING	14,744.82	6,500.00	9,036.84	12,000.00	12,000.00	0.00	0.00%
001.1010.5450.000	TELEPHONE/OTHR COMMNCT	6,145.96	5,500.00	4,766.88	5,500.00	5,500.00	0.00	0.00%
001.1010.5451.000	OTHR COMMNCTN/AIR CARDS	8,901.10	9,100.00	7,550.08	9,100.00	9,100.00	0.00	0.00%
001.1010.5460.000	CONFERENCE EXPENSE	16,128.58	15,000.00	17,212.49	15,000.00	15,000.00	0.00	0.00%
001.1010.5461.000	TRAVEL-AIRFARE	566.40	0.00	0.00	0.00	0.00	0.00	0.00%
001.1010.5462.000	TRAVEL EXPENSE - OTHER	188.70	100.00	0.00	100.00	100.00	0.00	0.00%
001.1010.5464.000	TRAVEL-PER DIEM	1,253.71	1,000.00	560.65	1,000.00	1,000.00	0.00	0.00%
001.1010.5465.000	TRAVEL - HOTEL/MOTEL	3,480.53	2,500.00	1,547.64	2,500.00	2,500.00	0.00	0.00%
001.1010.5470.000	TRAINING-NEW OFFICER	27,467.24	18,000.00	11,868.06	30,000.00	18,000.00	-12,000.00	-40.00%
001.1010.5471.000	TRAINING	750.00	400.00	0.00	400.00	400.00	0.00	0.00%
001.1010.5472.000	MILEAGE REIMBURSE	2,923.83	1,700.00	892.50	1,700.00	1,700.00	0.00	0.00%
001.1010.5475.000	RECRUITING EXPENSES	0.00	350.00	0.00	350.00	350.00	0.00	0.00%
001.1010.5565.000	VEHICLE OPER/MAINT SPPLY	20,839.04	25,000.00	22,511.09	25,000.00	25,000.00	0.00	0.00%
001.1010.5570.000	VEHICLE GAS	70,310.18	70,000.00	54,269.32	85,000.00	85,000.00	0.00	0.00%
001.1010.5571.000	VEHICLE DIESEL FUEL	77.31	500.00	156.06	500.00	500.00	0.00	0.00%
001.1010.5600.000	OPERATING SUPPLIES	20,483.07	21,500.00	17,001.48	21,500.00	21,500.00	0.00	0.00%
001.1010.5601.000	PROMOTION/PROGRAM SPPL'	1,291.02	2,000.00	1,380.43	2,000.00	2,000.00	0.00	0.00%
001.1010.5605.000	OFFICE SUPPLIES	925.80	3,000.00	1,416.31	3,000.00	3,000.00	0.00	0.00%
001.1010.5610.000	AMMUNITION EXPENSE	12,532.23	15,000.00	10,270.91	20,000.00	20,000.00	0.00	0.00%
001.1010.5612.000	COMPUTER COMPONENTS	129.85	1,500.00	0.00	1,500.00	1,500.00	0.00	0.00%
001.1010.5702.000	MINOR OFFICE FURN/EQUIP	92.13	0.00	0.00	0.00	0.00	0.00	0.00%
001.1010.5703.000	MINOR COMPUTER	1,869.10	2,000.00	611.27	2,000.00	2,000.00	0.00	0.00%
001.1010.5718.000	MINOR EQUIP, UNCLASSFIED	6,450.82	7,500.00	4,170.45	7,500.00	7,500.00	0.00	0.00%
001.1010.5980.000	REFUNDS/REIMB	330.00	0.00	0.00	0.00	0.00	0.00	0.00%
	Total Expense:	**5,172,914.38**	**5,399,236.00**	**3,347,022.92**	**5,301,314.00**	**5,471,911.00**	**170,597.00**	**3.22%**
Total Function: 1010 - Police Operations/Crime Prevention:		**-5,068,291.34**	**-5,306,214.00**	**-3,262,318.91**	**-5,202,142.00**	**-5,378,889.00**	**-176,747.00**	**3.40%**
Function: 1011 - Automated Traffic Enforcement								
Revenue								
001.1011.4410.000	Police Services ATE	0.00	0.00	0.00	0.00	10,000.00	10,000.00	0.00%
	Total Revenue:	**0.00**	**0.00**	**0.00**	**0.00**	**10,000.00**	**10,000.00**	**0.00%**
Expense								
001.1011.5342.000	CONTRACT-OUTSIDE HELP	0.00	0.00	0.00	0.00	3,500.00	3,500.00	0.00%
	Total Expense:	**0.00**	**0.00**	**0.00**	**0.00**	**3,500.00**	**3,500.00**	**0.00%**
Total Function: 1011 - Automated Traffic Enforcement:		**0.00**	**0.00**	**0.00**	**0.00**	**6,500.00**	**6,500.00**	**0.00%**

Budget Comparison Report

Account Number		2021-2022 Total Activity	2022-2023 Total Budget	2022-2023 YTD Activity Through Feb	Parent Budget 2022-2023 FY2023 Amend	Comparison 1 Budget 2023-2024 FY2024 Dept Request	Comparison 1 to Parent Budget Increase / (Decrease)	%
Function: 1030 - Emergency Mgmt								
Revenue								
001.1030.4875.000	RFNDS/REIMB	102.90	0.00	0.00	0.00	0.00	0.00	0.00%
	Total Revenue:	**102.90**	**0.00**	**0.00**	**0.00**	**0.00**	**0.00**	**0.00%**
Expense								
001.1030.5331.000	PAYMENTS-OTHER ENTITIES	32,663.00	33,970.00	34,296.00	34,296.00	36,011.00	1,715.00	5.00%
001.1030.5481.000	ELECTRICITY (SIRENS)	1,780.65	1,800.00	1,156.78	1,800.00	1,800.00	0.00	0.00%
001.1030.5600.000	OPERATING SUPPLIES	0.00	400.00	0.00	400.00	400.00	0.00	0.00%
	Total Expense:	**34,443.65**	**36,170.00**	**35,452.78**	**36,496.00**	**38,211.00**	**1,715.00**	**4.70%**
	Total Function: 1030 - Emergency Mgmt:	**-34,340.75**	**-36,170.00**	**-35,452.78**	**-36,496.00**	**-38,211.00**	**-1,715.00**	**4.70%**
Function: 1040 - Flood Control								
Expense								
001.1040.5300.000	INSURANCE - TORT LIAB	10.65	445.00	0.00	7.00	8.00	1.00	14.29%
001.1040.5485.000	STORM WATER FEES	48.00	48.00	48.00	48.00	48.00	0.00	0.00%
	Total Expense:	**58.65**	**493.00**	**48.00**	**55.00**	**56.00**	**1.00**	**1.82%**
	Total Function: 1040 - Flood Control:	**58.65**	**493.00**	**48.00**	**55.00**	**56.00**	**1.00**	**1.82%**
Function: 1050 - Fire Department								
Revenue								
001.1050.4278.000	FIRE PERMITS & CONTRACTED	14,060.00	13,500.00	25,015.00	20,000.00	13,500.00	-6,500.00	-32.50%
001.1050.4280.000	ASSEMBLY PERMIT	100.00	0.00	0.00	0.00	0.00	0.00	0.00%
001.1050.4326.000	STATE REIM - IVH & FIRE MAR	62,761.44	58,158.00	62,661.44	62,661.00	58,158.00	-4,503.00	-7.19%
001.1050.4414.000	FIRE SERVICES/TESTING/INSPE	13,590.77	13,500.00	14,577.61	13,500.00	30,000.00	16,500.00	122.22%
001.1050.4415.000	FIRE-LEAD TESTING/INSPECTN	0.00	0.00	10.00	0.00	0.00	0.00	0.00%
001.1050.4416.000	FIRE-PLAN REV FEES	5,175.00	4,500.00	865.00	4,500.00	4,500.00	0.00	0.00%
001.1050.4492.000	FIRE MISC CHRGS	0.00	200.00	300.00	200.00	200.00	0.00	0.00%
001.1050.4499.000	FIRE- ILLEGAL BURNING	2,120.00	1,000.00	1,390.00	1,200.00	1,000.00	-200.00	-16.67%
001.1050.4616.000	INT CHRGD - ACCTS REC	434.19	0.00	604.81	250.00	0.00	-250.00	-100.00%
001.1050.4875.000	RFNDS/REIMB: FIRE	18.41	0.00	5,008.67	50.00	0.00	-50.00	-100.00%
001.1050.4879.000	REBATES	0.00	0.00	6.69	15.00	0.00	-15.00	-100.00%
001.1050.4961.000	FIRE-NONCAPLZD ASSTS	110.00	0.00	0.00	0.00	0.00	0.00	0.00%
	Total Revenue:	**98,369.81**	**90,858.00**	**110,439.22**	**102,376.00**	**107,358.00**	**4,982.00**	**4.87%**
Expense								
001.1050.5010.010	REGULAR-NON UNION	613,625.78	629,994.00	419,323.92	636,994.00	662,059.00	25,065.00	3.93%
001.1050.5010.030	REGULAR-FIRE UNION	1,400,381.25	1,460,058.00	976,630.20	1,481,058.00	1,510,960.00	29,902.00	2.02%
001.1050.5020.010	OVERTIME-NON UNION	158.75	0.00	0.00	0.00	0.00	0.00	0.00%
001.1050.5020.030	OVERTIME-FIRE UNION	65,759.40	63,000.00	47,321.89	68,000.00	68,000.00	0.00	0.00%
001.1050.5056.040	OTHR DEPT-PPME UNION	694.55	0.00	817.20	0.00	0.00	0.00	0.00%

Budget Comparison Report

Account Number		2021-2022 Total Activity	2022-2023 Total Budget	2022-2023 YTD Activity Through Feb	Parent Budget 2022-2023 FY2023 Amend	Comparison 1 Budget 2023-2024 FY2024 Dept Request	Comparison 1 to Parent Budget Increase / (Decrease)	%
001.1050.5061.010	RHSA PAYOUTS-NON UNION	32,359.67	0.00	0.00	0.00	0.00	0.00	0.00%
001.1050.5101.010	SOCIAL SECURITY-NON UNION	10,541.55	11,207.00	7,307.47	11,331.00	11,611.00	280.00	2.47%
001.1050.5101.040	SOCIAL SECURITY-PPME UNIOI	40.16	0.00	48.10	0.00	0.00	0.00	0.00%
001.1050.5102.010	MEDICARE-NON UNION	8,023.41	9,135.00	5,888.96	9,237.00	9,600.00	363.00	3.93%
001.1050.5102.030	MEDICARE-FIRE UNION	19,987.32	21,171.00	13,957.06	22,462.00	22,895.00	433.00	1.93%
001.1050.5102.040	MEDICARE-PPME UNION	9.38	0.00	11.24	0.00	0.00	0.00	0.00%
001.1050.5111.010	IPERS-NON UNION	4,326.32	4,622.00	3,008.40	4,622.00	4,863.00	241.00	5.21%
001.1050.5111.040	IPERS-PPME UNION	65.57	0.00	77.16	0.00	0.00	0.00	0.00%
001.1050.5112.010	ICMA-NON UNION	24,294.36	25,042.00	16,349.44	25,042.00	25,795.00	753.00	3.01%
001.1050.5113.010	RETIREMENT-NON UNION	115,014.54	107,366.00	70,362.99	107,366.00	109,104.00	1,738.00	1.62%
001.1050.5113.030	RETIREMENT-FIRE UNION	366,779.21	348,954.00	228,395.51	348,954.00	347,219.00	-1,735.00	-0.50%
001.1050.5121.010	GRP INSUR-NON UNION	73,997.91	83,394.00	50,530.58	87,686.00	92,997.00	5,311.00	6.06%
001.1050.5121.030	GRP INSUR-FIRE UNION	260,255.41	298,662.00	185,045.44	314,045.00	315,930.00	1,885.00	0.60%
001.1050.5121.040	GRP INSUR-PPME UNION	206.23	0.00	241.16	0.00	0.00	0.00	0.00%
001.1050.5122.000	RETIREES GRP HLTH INS	85,318.52	102,176.00	55,082.26	85,027.00	96,329.00	11,302.00	13.29%
001.1050.5123.010	WORKCOMP-NON UNION	29,662.05	29,306.00	19,189.00	29,306.00	30,794.00	1,488.00	5.08%
001.1050.5123.030	WORKCOMP-FIRE UNION	73,746.80	73,441.00	50,448.52	76,861.00	79,422.00	2,561.00	3.33%
001.1050.5123.040	WORKCOMP-PPME UNION	8.83	0.00	18.71	0.00	0.00	0.00	0.00%
001.1050.5132.000	CLOTHING EXPENSE	20,370.51	23,000.00	10,582.01	16,200.00	24,000.00	7,800.00	48.15%
001.1050.5151.000	PHYSICALS/IMMUNIZATIONS	364.00	4,000.00	937.40	2,500.00	4,000.00	1,500.00	60.00%
001.1050.5210.000	ADVERTISING & LEGAL PUB	99.00	0.00	20.00	20.00	0.00	-20.00	-100.00%
001.1050.5216.000	BACKGROUND CHECKS	40.00	0.00	0.00	0.00	0.00	0.00	0.00%
001.1050.5230.000	CONSULTING & PROF FEES	0.00	0.00	275.00	275.00	0.00	-275.00	-100.00%
001.1050.5251.000	LICENSE & PERMITS	0.00	400.00	0.00	400.00	400.00	0.00	0.00%
001.1050.5280.000	DUES, MEMBER, SUBSCRIPTN	615.80	2,600.00	2,866.55	2,100.00	2,600.00	500.00	23.81%
001.1050.5290.000	INSURANCE - GENERAL	18,369.28	25,259.00	78.00	21,912.00	26,294.00	4,382.00	20.00%
001.1050.5300.000	INSURANCE - TORT LIAB	15,441.45	16,964.00	0.00	15,449.00	18,539.00	3,090.00	20.00%
001.1050.5342.000	CONTRACT-OUTSIDE HELP	11,409.70	0.00	5,200.00	19,000.00	30,000.00	11,000.00	57.89%
001.1050.5344.000	CONTRACT-MAINTENANCE	38,972.58	22,000.00	10,791.73	22,000.00	17,200.00	-4,800.00	-21.82%
001.1050.5347.000	CONTRACT-SOFTWARE MAINT	7,497.18	9,500.00	22,244.45	26,800.00	26,800.00	0.00	0.00%
001.1050.5347.150	CONTRACT-CMPTR TECH SPPR	425.00	650.00	0.00	650.00	650.00	0.00	0.00%
001.1050.5360.000	POSTAGE & SHIPPING	216.05	150.00	320.85	300.00	550.00	250.00	83.33%
001.1050.5370.000	PRINTING & BINDING	205.00	0.00	0.00	0.00	0.00	0.00	0.00%
001.1050.5380.000	RENTS & LEASES	232.05	250.00	0.00	250.00	250.00	0.00	0.00%
001.1050.5410.000	REPAIRS & MAINTENANCE	3,247.44	5,000.00	7,357.16	5,000.00	5,000.00	0.00	0.00%
001.1050.5413.000	VEHICLE REPAIRS & MAINTEN/	15,696.63	9,500.00	18,396.32	11,500.00	11,500.00	0.00	0.00%
001.1050.5450.000	TELEPHONE/OTHR COMMNCT	6,891.11	7,000.00	5,931.84	7,000.00	7,000.00	0.00	0.00%
001.1050.5460.000	CONFERENCE EXPENSE	10,271.20	13,000.00	5,430.67	6,800.00	13,000.00	6,200.00	91.18%
001.1050.5470.000	TRAINING	3,615.66	350.00	898.96	1,550.00	1,200.00	-350.00	-22.58%

Budget Comparison Report

Account Number		2021-2022 Total Activity	2022-2023 Total Budget	2022-2023 YTD Activity Through Feb	Parent Budget 2022-2023 FY2023 Amend	Comparison 1 Budget 2023-2024 FY2024 Dept Request	Comparison 1 to Parent Budget Increase / (Decrease)	%
001.1050.5565.000	VEHICLE OPER/MAINT SPPLY	7,502.28	5,750.00	2,426.44	3,750.00	3,750.00	0.00	0.00%
001.1050.5570.000	VEHICLE GAS	4,141.32	3,700.00	3,771.79	3,700.00	4,200.00	500.00	13.51%
001.1050.5571.000	VEHICLE DIESEL FUEL	11,799.79	11,000.00	9,578.99	15,000.00	15,000.00	0.00	0.00%
001.1050.5600.000	OPERATING SUPPLIES	10,852.42	9,500.00	4,085.39	9,500.00	9,500.00	0.00	0.00%
001.1050.5601.000	PROMOTION/PROGRAM SPPL\	0.00	400.00	0.00	250.00	400.00	150.00	60.00%
001.1050.5605.000	OFFICE SUPPLIES	527.92	1,300.00	261.20	1,300.00	1,300.00	0.00	0.00%
001.1050.5630.000	EMS SUPPLIES	3,028.99	4,000.00	6,000.52	4,000.00	4,000.00	0.00	0.00%
001.1050.5703.000	MINOR COMPUTER	978.61	950.00	292.41	950.00	950.00	0.00	0.00%
001.1050.5718.000	MINOR EQUIP, UNCLASSFIED	11,412.86	10,000.00	1,545.09	7,000.00	10,000.00	3,000.00	42.86%
001.1050.5980.000	REFUNDS/REIMB	100.00	0.00	8.01	0.00	0.00	0.00	0.00%
	Total Expense:	**3,389,580.80**	**3,453,751.00**	**2,269,355.99**	**3,513,147.00**	**3,625,661.00**	**112,514.00**	**3.20%**
	Total Function: 1050 - Fire Department:	**-3,291,210.99**	**-3,362,893.00**	**-2,158,916.77**	**-3,410,771.00**	**-3,518,303.00**	**-107,532.00**	**3.15%**
Function: 1070 - Building Inspections								
Revenue								
001.1070.4261.000	BUILDING PERMITS	113,058.00	175,000.00	99,974.49	175,000.00	175,000.00	0.00	0.00%
001.1070.4262.000	ELECTRICAL PERMITS	0.00	0.00	22,570.00	30,000.00	30,000.00	0.00	0.00%
001.1070.4263.000	MECHANICAL & GAS PERMITS	19,514.87	20,000.00	12,747.05	10,000.00	10,000.00	0.00	0.00%
001.1070.4264.000	PLAN REVIEW FEES	0.00	0.00	0.00	20,000.00	60,000.00	40,000.00	200.00%
001.1070.4265.000	PLUMBING PERMITS	15,021.13	7,500.00	6,002.75	10,000.00	10,000.00	0.00	0.00%
001.1070.4266.000	DEMOL,MOVING,ENCROACHM	525.00	100.00	225.00	100.00	200.00	100.00	100.00%
001.1070.4271.000	SEPTIC TANK INSTALLATION	0.00	0.00	0.00	0.00	0.00	0.00	0.00%
001.1070.4616.000	INT CHRGD - ACCTS REC	105.04	0.00	47.18	0.00	0.00	0.00	0.00%
	Total Revenue:	**148,224.04**	**202,600.00**	**141,566.47**	**245,100.00**	**285,200.00**	**40,100.00**	**16.36%**
Expense								
001.1070.5010.010	REGULAR-NON UNION	117,029.06	65,129.00	41,147.74	53,381.00	30,975.00	-22,406.00	-41.97%
001.1070.5061.010	RHSA PAYOUTS-NON UNION	21,283.63	0.00	10,753.73	10,754.00	0.00	-10,754.00	-100.00%
001.1070.5101.010	SOCIAL SECURITY-NON UNION	7,144.10	4,038.00	2,510.53	3,310.00	1,920.00	-1,390.00	-41.99%
001.1070.5102.010	MEDICARE-NON UNION	1,670.75	944.00	587.17	775.00	449.00	-326.00	-42.06%
001.1070.5111.010	IPERS-NON UNION	11,047.44	6,148.00	3,789.93	4,945.00	2,924.00	-2,021.00	-40.87%
001.1070.5121.010	GRP INSUR-NON UNION	12,884.54	6,513.00	3,642.55	10,481.00	3,430.00	-7,051.00	-67.27%
001.1070.5122.000	RETIREES GRP HLTH INS	3,589.25	0.00	5,908.28	9,194.00	10,568.00	1,374.00	14.94%
001.1070.5123.010	WORKCOMP-NON UNION	1,511.26	1,275.00	955.45	1,027.00	607.00	-420.00	-40.90%
001.1070.5280.000	DUES, MEMBER, SUBSCRIPTN	175.00	400.00	175.00	400.00	400.00	0.00	0.00%
001.1070.5290.000	INSURANCE - GENERAL	464.21	266.00	0.00	264.00	317.00	53.00	20.08%
001.1070.5300.000	INSURANCE - TORT LIAB	915.51	1,089.00	0.00	788.00	946.00	158.00	20.05%
001.1070.5342.000	CONTRACT-OUTSIDE HELP	22,619.19	133,500.00	81,665.91	157,000.00	213,750.00	56,750.00	36.15%
001.1070.5360.000	POSTAGE & SHIPPING	8.55	100.00	0.00	100.00	100.00	0.00	0.00%
001.1070.5370.000	PRINTING & BINDING	0.00	400.00	0.00	0.00	0.00	0.00	0.00%

Account Number		2021-2022 Total Activity	2022-2023 Total Budget	2022-2023 YTD Activity Through Feb	Parent Budget 2022-2023 FY2023 Amend	Comparison 1 Budget 2023-2024 FY2024 Dept Request	Comparison 1 to Parent Budget Increase / (Decrease)	%
001.1070.5450.000	TELEPHONE/OTHR COMMNCT	833.07	750.00	427.72	500.00	500.00	0.00	0.00%
001.1070.5565.000	VEHICLE OPER/MAINT SPPLY	221.21	500.00	0.00	0.00	0.00	0.00	0.00%
001.1070.5570.000	VEHICLE GAS	1,052.80	750.00	590.57	600.00	0.00	-600.00	-100.00%
001.1070.5600.000	OPERATING SUPPLIES	79.41	250.00	4.38	300.00	0.00	-300.00	-100.00%
001.1070.5605.000	OFFICE SUPPLIES	105.70	200.00	0.00	0.00	100.00	100.00	0.00%
001.1070.5718.000	MINOR EQUIP, UNCLASSFIED	63.90	0.00	0.00	0.00	0.00	0.00	0.00%
001.1070.5980.000	REFUNDS/REIMB	0.00	0.00	120.00	0.00	0.00	0.00	0.00%
	Total Expense:	**202,698.58**	**222,252.00**	**152,278.96**	**253,819.00**	**266,986.00**	**13,167.00**	**5.19%**
	Total Function: 1070 - Building Inspections:	**-54,474.54**	**-19,652.00**	**-10,712.49**	**-8,719.00**	**18,214.00**	**26,933.00**	**-308.90%**
Function: 1071 - Rental Inspections								
Revenue								
001.1071.4420.000	RENTAL HOUSING INSPECTION	705.00	100,000.00	525.00	62,500.00	150,000.00	87,500.00	140.00%
001.1071.4421.000	REGISTRATION FEES/RENTALS	99,990.17	50,000.00	5,834.74	10,000.00	50,865.00	40,865.00	408.65%
001.1071.4422.000	RENTAL APPLICATION FEE	7,800.00	2,000.00	1,100.00	2,000.00	2,000.00	0.00	0.00%
001.1071.4423.000	RENTAL HOUSING ADMINISTR.	0.00	10,000.00	0.00	0.00	0.00	0.00	0.00%
001.1071.4616.000	INT CHRGE - ACCS REC	6,251.38	2,000.00	1,961.32	2,500.00	2,000.00	-500.00	-20.00%
001.1071.4875.000	RFNDS/REIMB:	0.00	200.00	0.00	200.00	200.00	0.00	0.00%
	Total Revenue:	**114,746.55**	**164,200.00**	**9,421.06**	**77,200.00**	**205,065.00**	**127,865.00**	**165.63%**
Expense								
001.1071.5010.010	REGULAR-NON UNION	114,347.46	58,104.00	76,611.12	86,225.00	49,560.00	-36,665.00	-42.52%
001.1071.5061.010	RHSA PAYOUTS - NON UNION	0.00	0.00	5,838.22	6,674.00	0.00	-6,674.00	-100.00%
001.1071.5101.010	SOCIAL SECURITY-NON UNION	6,760.83	3,602.00	4,549.22	5,346.00	3,073.00	-2,273.00	-42.52%
001.1071.5102.010	MEDICARE-NON UNION	1,581.22	843.00	1,063.79	1,250.00	719.00	-531.00	-42.48%
001.1071.5111.010	IPERS-NON UNION	10,794.27	5,485.00	6,486.92	7,573.00	4,678.00	-2,895.00	-38.23%
001.1071.5121.010	GRP INSUR-NON UNION	18,345.90	13,154.00	11,652.59	14,579.00	12,004.00	-2,575.00	-17.66%
001.1071.5123.010	WORKCOMP-NON UNION	1,212.79	1,126.00	1,426.41	1,561.00	804.00	-757.00	-48.49%
001.1071.5251.000	LICENSE & PERMITS	0.00	275.00	0.00	275.00	0.00	-275.00	-100.00%
001.1071.5280.000	DUES, MEMBER, SUBSCRIPTN	35.00	50.00	0.00	50.00	50.00	0.00	0.00%
001.1071.5290.000	INSURANCE - GENERAL	464.21	266.00	0.00	533.00	640.00	107.00	20.08%
001.1071.5300.000	INSURANCE - TORT LIAB	751.75	883.00	0.00	691.00	829.00	138.00	19.97%
001.1071.5342.000	CONTRACT-OUTSIDE HELP	0.00	100,000.00	270.00	62,500.00	150,000.00	87,500.00	140.00%
001.1071.5360.000	POSTAGE & SHIPPING	689.00	900.00	300.00	900.00	1,000.00	100.00	11.11%
001.1071.5410.000	REPAIRS & MAINTENANCE	575.00	50.00	0.00	50.00	0.00	-50.00	-100.00%
001.1071.5450.000	TELEPHONE/OTHR COMMNCT	1,056.26	700.00	760.13	800.00	700.00	-100.00	-12.50%
001.1071.5460.000	CONFERENCE EXPENSE	0.00	200.00	400.00	400.00	400.00	0.00	0.00%
001.1071.5565.000	VEHICLE OPER/MAINT SPPLY	61.18	500.00	0.00	500.00	500.00	0.00	0.00%
001.1071.5570.000	VEHICLE GAS	641.65	600.00	440.72	600.00	600.00	0.00	0.00%
001.1071.5600.000	OPERATING SUPPLIES	829.98	500.00	145.33	500.00	250.00	-250.00	-50.00%

Budget Comparison Report

Account Number		2021-2022 Total Activity	2022-2023 Total Budget	2022-2023 YTD Activity Through Feb	Parent Budget 2022-2023 FY2023 Amend	Comparison 1 Budget 2023-2024 FY2024 Dept Request	Comparison 1 to Parent Budget Increase / (Decrease)	%
001.1071.5605.000	OFFICE SUPPLIES	39.50	300.00	153.08	300.00	200.00	-100.00	-33.33%
001.1071.5718.000	MINOR EQUIP. UNCLASSIFIED	63.90	0.00	0.00	0.00	0.00	0.00	0.00%
	Total Expense:	**158,249.90**	**187,538.00**	**110,097.53**	**191,307.00**	**226,007.00**	**34,700.00**	**18.14%**
	Total Function: 1071 - Rental Inspections:	**-43,503.35**	**-23,338.00**	**-100,676.47**	**-114,107.00**	**-20,942.00**	**93,165.00**	**-81.65%**
Function: 1072 - Electrial Inspections								
Revenue								
001.1072.4251.000	ELECTRICIAN LICENSES	4,920.00	3,000.00	1,225.00	1,000.00	1,000.00	0.00	0.00%
001.1072.4262.000	ELECTRICAL PERMITS	8,845.00	10,000.00	1,284.00	0.00	0.00	0.00	0.00%
001.1072.4616.000	INT CHRGD - ACCTS REC	45.03	0.00	11.16	20.00	0.00	-20.00	-100.00%
001.1072.4875.000	RFNDS/REIMB:ELECTRICAL INS	-759.63	0.00	759.63	760.00	0.00	-760.00	-100.00%
	Total Revenue:	**13,050.40**	**13,000.00**	**3,279.79**	**1,780.00**	**1,000.00**	**-780.00**	**-43.82%**
Expense								
001.1072.5010.010	REGULAR-NON UNION	18,332.58	28,228.00	8,205.87	9,507.00	0.00	-9,507.00	-100.00%
001.1072.5010.040	REGULAR-PPME UNION	32,265.19	32,911.00	11,117.12	16,756.00	0.00	-16,756.00	-100.00%
001.1072.5020.010	OVERTIME-NON UNION	0.00	0.00	6.95	0.00	0.00	0.00	0.00%
001.1072.5020.040	OVERTIME-PPME UNION	441.95	0.00	0.00	0.00	0.00	0.00	0.00%
001.1072.5060.010	TERM PAYOUTS-NON UNION	2,564.31	0.00	0.00	0.00	0.00	0.00	0.00%
001.1072.5060.040	TERM PAYOUTS-PPME UNION	629.35	0.00	0.00	0.00	0.00	0.00	0.00%
001.1072.5061.040	RHSA PAYOUTS-PPME UNION	5,689.11	0.00	0.00	0.00	0.00	0.00	0.00%
001.1072.5101.010	SOCIAL SECURITY-NON UNION	1,279.45	1,750.00	509.18	590.00	0.00	-590.00	-100.00%
001.1072.5101.040	SOCIAL SECURITY-PPME UNIOI	1,948.59	2,040.00	638.55	1,039.00	0.00	-1,039.00	-100.00%
001.1072.5102.010	MEDICARE-NON UNION	299.37	409.00	119.11	138.00	0.00	-138.00	-100.00%
001.1072.5102.040	MEDICARE-PPME UNION	455.68	477.00	149.37	243.00	0.00	-243.00	-100.00%
001.1072.5111.010	IPERS-NON UNION	1,730.51	2,665.00	747.03	869.00	0.00	-869.00	-100.00%
001.1072.5111.040	IPERS-PPME UNION	2,631.64	3,107.00	1,021.18	1,553.00	0.00	-1,553.00	-100.00%
001.1072.5121.010	GRP INSUR-NON UNION	16.88	0.00	33.71	0.00	0.00	0.00	0.00%
001.1072.5121.040	GRP INSUR-PPME UNION	7,223.30	9,226.00	2,339.35	3,234.00	0.00	-3,234.00	-100.00%
001.1072.5122.000	RETIREES GRP HLTH INS	712.96	1,149.00	750.50	1,174.00	1,354.00	180.00	15.33%
001.1072.5123.010	WORKCOMP-NON UNION	423.50	1,073.00	298.92	351.00	0.00	-351.00	-100.00%
001.1072.5123.040	WORKCOMP-PPME UNION	801.22	1,251.00	414.56	626.00	0.00	-626.00	-100.00%
001.1072.5151.000	PHYSICALS/IMMUNIZATIONS	152.98	0.00	264.89	0.00	0.00	0.00	0.00%
001.1072.5210.000	ADVERTISING & LEGAL PUB	71.10	0.00	16.00	0.00	0.00	0.00	0.00%
001.1072.5216.000	BACKGROUND CHECKS	7.00	0.00	9.00	0.00	0.00	0.00	0.00%
001.1072.5280.000	DUES, MEMBER, SUBSCRIPTN	0.00	300.00	0.00	0.00	0.00	0.00	0.00%
001.1072.5300.000	INSURANCE - TORT LIAB	288.29	336.00	0.00	313.00	376.00	63.00	20.13%
001.1072.5342.000	CONTRACT-OUTSIDE HELP	2,200.00	0.00	13,520.00	0.00	0.00	0.00	0.00%
001.1072.5360.000	POSTAGE & SHIPPING	15.54	0.00	27.50	30.00	0.00	-30.00	-100.00%
001.1072.5600.000	OPERATING SUPPLIES	341.20	1,000.00	0.00	0.00	0.00	0.00	0.00%

Budget Comparison Report

Account Number		2021-2022 Total Activity	2022-2023 Total Budget	2022-2023 YTD Activity Through Feb	Parent Budget 2022-2023 FY2023 Amend	Comparison 1 Budget 2023-2024 FY2024 Dept Request	Comparison 1 to Parent Budget Increase / (Decrease)	%
001.1072.5605.000	OFFICE SUPPLIES	0.00	0.00	15.99	20.00	0.00	-20.00	-100.00%
001.1072.5704.000	MINOR SOFTWARE	0.00	0.00	137.43	140.00	0.00	-140.00	-100.00%
001.1072.5718.000	MINOR EQUIP, UNCLASSFIED	252.97	0.00	0.00	0.00	0.00	0.00	0.00%
001.1072.5720.000	MINOR BOOKS,FILM,REC	0.00	150.00	0.00	0.00	0.00	0.00	0.00%
001.1072.5980.000	REFUNDS/REIMB	0.00	0.00	215.00	115.00	0.00	-115.00	-100.00%
	Total Expense:	**80,774.67**	**86,072.00**	**40,557.21**	**36,698.00**	**1,730.00**	**-34,968.00**	**-95.29%**
	Total Function: 1072 - Electrial Inspections:	**-67,724.27**	**-73,072.00**	**-37,277.42**	**-34,918.00**	**-730.00**	**34,188.00**	**-97.91%**
Function: 1075 - Code Enforcement								
Revenue								
001.1075.4492.000	NUISANCE MISC CHRGS	23,216.90	30,000.00	14,272.56	25,000.00	25,000.00	0.00	0.00%
	Total Revenue:	**23,216.90**	**30,000.00**	**14,272.56**	**25,000.00**	**25,000.00**	**0.00**	**0.00%**
Expense								
001.1075.5010.010	REGULAR-NON UNION	56,627.54	58,228.00	39,756.32	61,988.00	64,009.00	2,021.00	3.26%
001.1075.5101.010	SOCIAL SECURITY-NON UNION	3,344.79	3,610.00	2,345.76	3,843.00	3,969.00	126.00	3.28%
001.1075.5102.010	MEDICARE-NON UNION	782.33	844.00	548.62	899.00	928.00	29.00	3.23%
001.1075.5111.010	IPERS-NON UNION	5,345.67	5,497.00	3,658.59	5,757.00	6,042.00	285.00	4.95%
001.1075.5121.010	GRP INSUR-NON UNION	14,289.38	15,376.00	10,304.48	16,977.00	18,006.00	1,029.00	6.06%
001.1075.5123.010	WORKCOMP-NON UNION	611.41	1,140.00	743.27	1,196.00	1,255.00	59.00	4.93%
001.1075.5210.000	ADVERTISING & LEGAL PUB	0.00	100.00	0.00	100.00	100.00	0.00	0.00%
001.1075.5230.000	CONSULTING & PROF FEES	805.00	0.00	0.00	0.00	0.00	0.00	0.00%
001.1075.5250.000	COURT, RECORD & FILING FEE	0.00	250.00	0.00	0.00	0.00	0.00	0.00%
001.1075.5261.000	RESIDENTIAL CLEANUP	16,190.72	20,000.00	7,689.00	15,000.00	15,000.00	0.00	0.00%
001.1075.5262.000	RESIDENTIAL SNOW REMOVAL	5,387.50	3,000.00	0.00	3,000.00	5,000.00	2,000.00	66.67%
001.1075.5263.000	RESIDENTIAL WEED CONTROL	11,610.00	15,000.00	7,345.00	15,000.00	15,000.00	0.00	0.00%
001.1075.5290.000	INSURANCE - GENERAL	396.11	268.00	0.00	269.00	323.00	54.00	20.07%
001.1075.5300.000	INSURANCE - TORT LIAB	513.59	626.00	0.00	562.00	674.00	112.00	19.93%
001.1075.5347.000	CONTRACT-SOFTWARE MAINT	5,068.46	13,290.00	6,090.00	17,967.00	12,150.00	-5,817.00	-32.38%
001.1075.5359.000	TOWING SERVICES	0.00	1,000.00	360.00	1,000.00	1,000.00	0.00	0.00%
001.1075.5360.000	POSTAGE & SHIPPING	1,007.00	2,000.00	1,302.10	2,000.00	2,000.00	0.00	0.00%
001.1075.5410.000	REPAIRS & MAINTENANCE	0.00	200.00	0.00	200.00	200.00	0.00	0.00%
001.1075.5440.000	TAXES PAID	0.00	2,000.00	0.00	2,000.00	2,000.00	0.00	0.00%
001.1075.5450.000	TELEPHONE/OTHR COMMNCT	969.83	1,200.00	647.32	1,200.00	1,200.00	0.00	0.00%
001.1075.5460.000	CONFERENCE EXPENSE	0.00	150.00	0.00	150.00	150.00	0.00	0.00%
001.1075.5483.000	WATER	0.00	500.00	0.00	500.00	500.00	0.00	0.00%
001.1075.5485.000	STORM WATER FEES	482.49	690.00	838.00	1,000.00	690.00	-310.00	-31.00%
001.1075.5565.000	VEHICLE OPER/MAINT SPPLY	10.13	500.00	0.00	500.00	500.00	0.00	0.00%
001.1075.5570.000	VEHICLE GAS	1,421.14	1,500.00	1,143.25	2,000.00	1,500.00	-500.00	-25.00%
001.1075.5600.000	OPERATING SUPPLIES	102.73	200.00	13.35	200.00	200.00	0.00	0.00%

Budget Comparison Report

Account Number		2021-2022 Total Activity	2022-2023 Total Budget	2022-2023 YTD Activity Through Feb	Parent Budget 2022-2023 FY2023 Amend	Comparison 1 Budget 2023-2024 FY2024 Dept Request	Comparison 1 to Parent Budget Increase / (Decrease)	%
001.1075.5605.000	OFFICE SUPPLIES	24.72	200.00	0.00	200.00	200.00	0.00	0.00%
001.1075.5718.000	MINOR EQUIP, UNCLASSFIED	31.95	0.00	0.00	0.00	0.00	0.00	0.00%
	Total Expense:	**125,022.49**	**147,369.00**	**82,785.06**	**153,508.00**	**152,596.00**	**-912.00**	**-0.59%**
	Total Function: 1075 - Code Enforcement:	**-101,805.59**	**-117,369.00**	**-68,512.50**	**-128,508.00**	**-127,596.00**	**912.00**	**-0.71%**
Function: 1090 - Animal Control								
Expense								
001.1090.5331.000	PAYMENTS-OTHER ENTITIES	52,000.00	52,000.00	60,000.03	80,000.00	83,200.00	3,200.00	4.00%
	Total Expense:	**52,000.00**	**52,000.00**	**60,000.03**	**80,000.00**	**83,200.00**	**3,200.00**	**4.00%**
	Total Function: 1090 - Animal Control:	**52,000.00**	**52,000.00**	**60,000.03**	**80,000.00**	**83,200.00**	**3,200.00**	**4.00%**
Function: 1099 - Police and Fire Building Exps								
Revenue								
001.1099.4620.000	RENTS - Police/Fire Building	0.00	0.00	0.00	0.00	6,000.00	6,000.00	0.00%
001.1099.4875.000	RFNDS/REIMB	4,565.81	4,212.00	0.00	4,545.00	4,545.00	0.00	0.00%
001.1099.4960.000	SALE OF F.A.	0.00	0.00	0.00	2,800.00	0.00	-2,800.00	-100.00%
	Total Revenue:	**4,565.81**	**4,212.00**	**0.00**	**7,345.00**	**10,545.00**	**3,200.00**	**43.57%**
Expense								
001.1099.5010.010	REGULAR-NON UNION	0.00	0.00	872.67	0.00	1,663.00	1,663.00	0.00%
001.1099.5101.010	SOCIAL SECURITY-NON UNION	0.00	0.00	52.12	0.00	103.00	103.00	0.00%
001.1099.5102.010	MEDICARE-NON UNION	0.00	0.00	12.23	0.00	24.00	24.00	0.00%
001.1099.5111.010	IPERS-NON UNION	0.00	0.00	77.72	0.00	157.00	157.00	0.00%
001.1099.5121.010	GRP INSUR-NON UNION	0.00	0.00	179.92	0.00	363.00	363.00	0.00%
001.1099.5123.010	WORKCOMP-NON UNION	0.00	0.00	20.35	0.00	41.00	41.00	0.00%
001.1099.5290.000	INSURANCE - GENERAL	21,777.13	24,084.00	0.00	28,600.00	34,320.00	5,720.00	20.00%
001.1099.5300.000	INSURANCE - TORT LIAB	661.78	559.00	0.00	779.00	935.00	156.00	20.03%
001.1099.5342.000	CONTRACT-OUTSIDE HELP	6,171.96	10,000.00	2,650.05	10,000.00	10,000.00	0.00	0.00%
001.1099.5344.000	CONTRACT-MAINTENANCE	5,938.91	8,647.98	2,925.15	8,648.00	8,648.00	0.00	0.00%
001.1099.5347.000	CONTRACT SOFTWARE & TECH	1,712.00	0.00	0.00	5,200.00	3,600.00	-1,600.00	-30.77%
001.1099.5386.000	CONTRACT LAWN CARE	1,066.00	1,200.00	7,957.00	16,500.00	16,500.00	0.00	0.00%
001.1099.5410.000	REPAIRS & MAINTENANCE	5,157.49	1,500.00	25,590.15	29,000.00	17,000.00	-12,000.00	-41.38%
001.1099.5450.000	TELEPHONE/OTHER COMMNC	31,683.66	30,000.00	20,325.33	31,000.00	32,000.00	1,000.00	3.23%
001.1099.5481.000	ELECTRICITY	91,505.04	75,000.00	54,322.69	93,000.00	93,000.00	0.00	0.00%
001.1099.5482.000	NATURAL GAS	28,618.42	28,000.00	15,889.37	28,000.00	30,000.00	2,000.00	7.14%
001.1099.5485.000	STORM WATER FEES	2,290.29	2,290.00	2,290.29	2,290.00	2,290.00	0.00	0.00%
001.1099.5611.000	BLDG,GRD OPER/MAINT SPLY	3,787.22	0.00	631.92	1,500.00	1,500.00	0.00	0.00%
	Total Expense:	**200,369.90**	**181,280.98**	**133,796.96**	**254,517.00**	**252,144.00**	**-2,373.00**	**-0.93%**
	Total Function: 1099 - Police and Fire Building Exps:	**-195,804.09**	**-177,068.98**	**-133,796.96**	**-247,172.00**	**-241,599.00**	**5,573.00**	**-2.25%**

Budget Comparison Report

Account Number		2021-2022 Total Activity	2022-2023 Total Budget	2022-2023 YTD Activity Through Feb	Parent Budget 2022-2023 FY2023 Amend	Comparison 1 Budget 2023-2024 FY2024 Dept Request	Comparison 1 to Parent Budget Increase / (Decrease)	%
Function: 2010 - Roads, Bridges, Sidewalks								
Revenue								
001.2010.4267.000	STREET EXCAVATN/CURB CUT	912.00	400.00	662.00	700.00	400.00	-300.00	-42.86%
001.2010.4270.000	EXCAVATION PERMITS	3,576.00	2,500.00	2,447.00	2,500.00	2,500.00	0.00	0.00%
001.2010.4272.000	Public Works - Driveway Inspe	975.00	1,350.00	1,600.00	1,550.00	1,350.00	-200.00	-12.90%
001.2010.4276.000	Public Works - Driveway Exten	0.00	0.00	97.00	97.00	0.00	-97.00	-100.00%
001.2010.4325.000	STATE PRIMARY ROAD EXTENS	0.00	40,907.00	44,215.71	44,216.00	44,216.00	0.00	0.00%
001.2010.4492.000	STREET MISC CHRGS	229.14	0.00	0.00	0.00	0.00	0.00	0.00%
001.2010.4616.000	INT CHRGD - ACCTS REC	13.21	0.00	19.97	15.00	10.00	-5.00	-33.33%
001.2010.4875.000	RFNDS/REIMB: STREETS	436.66	1,000.00	-0.06	3,500.00	0.00	-3,500.00	-100.00%
	Total Revenue:	**6,142.01**	**46,157.00**	**49,041.62**	**52,578.00**	**48,476.00**	**-4,102.00**	**-7.80%**
Expense								
001.2010.5010.010	REGULAR-NON UNION	73,096.48	77,497.00	51,432.64	78,497.00	81,981.00	3,484.00	4.44%
001.2010.5010.040	REGULAR-PPME UNION	510,255.52	660,264.00	357,703.76	670,264.00	668,532.00	-1,732.00	-0.26%
001.2010.5020.040	OVERTIME-PPME UNION	5,638.48	0.00	5,365.02	0.00	0.00	0.00	0.00%
001.2010.5030.070	PART-TIME TEMPORARY	0.00	4,000.00	0.00	4,000.00	4,000.00	0.00	0.00%
001.2010.5060.040	TERM PAYOUTS-PPME UNION	12,928.46	0.00	10,522.01	0.00	0.00	0.00	0.00%
001.2010.5061.040	RHSA PAYOUTS-PPME UNION	6,624.23	0.00	7,305.68	7,306.00	0.00	-7,306.00	-100.00%
001.2010.5101.010	SOCIAL SECURITY-NON UNION	4,383.10	4,805.00	3,083.74	4,867.00	5,083.00	216.00	4.44%
001.2010.5101.040	SOCIAL SECURITY-PPME UNIO	30,953.72	40,936.00	22,195.49	41,556.00	41,449.00	-107.00	-0.26%
001.2010.5101.070	SOCIAL SECURITY-PT TEMP	0.00	248.00	0.00	248.00	248.00	0.00	0.00%
001.2010.5102.010	MEDICARE-NON UNION	1,025.04	1,124.00	721.17	1,139.00	1,189.00	50.00	4.39%
001.2010.5102.040	MEDICARE-PPME UNION	7,239.13	9,574.00	5,190.76	9,719.00	9,694.00	-25.00	-0.26%
001.2010.5102.070	MEDICARE-TEMPORARY	0.00	58.00	0.00	58.00	58.00	0.00	0.00%
001.2010.5111.010	IPERS-NON UNION	6,900.34	7,316.00	4,760.82	7,316.00	7,739.00	423.00	5.78%
001.2010.5111.040	IPERS-PPME UNION	48,700.24	62,329.00	31,336.56	62,329.00	63,109.00	780.00	1.25%
001.2010.5121.010	GRP INSUR-NON UNION	13,970.04	15,376.00	10,044.04	16,169.00	17,149.00	980.00	6.06%
001.2010.5121.040	GRP INSUR-PPME UNION	123,425.31	164,076.00	81,758.62	172,519.00	182,587.00	10,068.00	5.84%
001.2010.5122.000	RETIREES GRP HLTH INS	30,840.06	33,853.00	22,754.54	34,406.00	39,547.00	5,141.00	14.94%
001.2010.5123.010	WORKCOMP-NON UNION	805.05	4,553.00	988.89	4,558.00	4,822.00	264.00	5.79%
001.2010.5123.040	WORKCOMP-PPME UNION	15,487.04	29,234.00	19,334.74	29,268.00	32,634.00	3,366.00	11.50%
001.2010.5123.070	WORKCOMP-TEMPORARY	0.00	235.00	0.00	235.00	235.00	0.00	0.00%
001.2010.5290.000	INSURANCE - GENERAL	23,584.49	26,122.00	178.00	31,384.00	35,666.00	4,282.00	13.64%
001.2010.5300.000	INSURANCE - TORT LIAB	9,440.13	12,859.00	0.00	10,817.00	12,980.00	2,163.00	20.00%
	Total Expense:	**925,296.86**	**1,154,459.00**	**634,676.48**	**1,186,655.00**	**1,208,702.00**	**22,047.00**	**1.86%**
	Total Function: 2010 - Roads, Bridges, Sidewalks:	**-919,154.85**	**-1,108,302.00**	**-585,634.86**	**-1,134,077.00**	**-1,160,226.00**	**-26,149.00**	**2.31%**

Budget Comparison Report

Account Number		2021-2022 Total Activity	2022-2023 Total Budget	2022-2023 YTD Activity Through Feb	Parent Budget 2022-2023 FY2023 Amend	Comparison 1 Budget 2023-2024 FY2024 Dept Request	Comparison 1 to Parent Budget Increase / (Decrease)	%
Function: 2011 - Sidewalks								
Revenue								
001.2011.4272.000	SIDEWALK INSPECTION FEES	1,360.00	1,500.00	1,111.00	1,500.00	1,500.00	0.00	0.00%
001.2011.4275.000	NON STANDARD DRVWAY FEE	1,767.00	1,500.00	204.00	300.00	0.00	-300.00	-100.00%
001.2011.4276.000	DRIVEWAY EXTENSION PERMI	4,298.00	4,000.00	2,378.00	4,000.00	4,000.00	0.00	0.00%
001.2011.4616.000	INT CHRGD - ACCTS REC	2.67	0.00	3.92	4.00	0.00	-4.00	-100.00%
	Total Revenue:	**7,427.67**	**7,000.00**	**3,696.92**	**5,804.00**	**5,500.00**	**-304.00**	**-5.24%**
Expense								
001.2011.5410.000	REPAIRS & MAINTENANCE	0.00	0.00	147.18	150.00	0.00	-150.00	-100.00%
	Total Expense:	**0.00**	**0.00**	**147.18**	**150.00**	**0.00**	**-150.00**	**-100.00%**
	Total Function: 2011 - Sidewalks:	**7,427.67**	**7,000.00**	**3,549.74**	**5,654.00**	**5,500.00**	**-154.00**	**-2.72%**
Function: 2020 - Parking								
Revenue								
001.2020.4492.000	MISC CHARGES	0.00	0.00	170.03	350.00	600.00	250.00	71.43%
001.2020.4520.000	ADM - Parking Violations	48,757.11	75,000.00	33,683.81	75,000.00	75,000.00	0.00	0.00%
001.2020.4620.000	ADM - Parking Lease	1,200.00	1,200.00	1,200.00	1,200.00	1,200.00	0.00	0.00%
	Total Revenue:	**49,957.11**	**76,200.00**	**35,053.84**	**76,550.00**	**76,800.00**	**250.00**	**0.33%**
Expense								
001.2020.5010.010	REGULAR-NON UNION	2,906.65	2,672.00	1,654.50	2,672.00	0.00	-2,672.00	-100.00%
001.2020.5010.020	REGULAR-POLICE UNION	14,063.13	35,878.00	23,355.42	37,795.00	39,036.00	1,241.00	3.28%
001.2020.5020.020	OVERTIME-POLICE UNION	0.00	0.00	115.02	0.00	0.00	0.00	0.00%
001.2020.5060.020	TERM PAYOUTS-POLICE UNIOI	2,837.74	0.00	0.00	0.00	0.00	0.00	0.00%
001.2020.5101.010	SOCIAL SECURITY-NON UNION	171.55	166.00	97.47	166.00	0.00	-166.00	-100.00%
001.2020.5101.020	SOCIAL SECURITY-POLICE UNIC	1,011.50	2,224.00	1,414.16	2,343.00	2,420.00	77.00	3.29%
001.2020.5102.010	MEDICARE-NON UNION	40.14	39.00	22.83	39.00	0.00	-39.00	-100.00%
001.2020.5102.020	MEDICARE-POLICE UNION	236.58	520.00	330.74	549.00	566.00	17.00	3.10%
001.2020.5111.010	IPERS-NON UNION	274.38	252.00	156.17	252.00	0.00	-252.00	-100.00%
001.2020.5111.020	IPERS-POLICE UNION	1,327.55	3,387.00	2,121.25	3,473.00	3,685.00	212.00	6.10%
001.2020.5121.010	GRP INSUR-NON UNION	388.00	332.00	206.80	349.00	0.00	-349.00	-100.00%
001.2020.5121.020	GRP INSUR-POLICE UNION	3,324.00	15,376.00	4,511.17	6,843.00	7,253.00	410.00	5.99%
001.2020.5122.000	RETIREES GRP HLTH INS	1,340.86	1,418.00	0.00	0.00	0.00	0.00	0.00%
001.2020.5123.010	WORKCOMP-NON UNION	2.57	4.00	2.65	4.00	0.00	-4.00	-100.00%
001.2020.5123.020	WORKCOMP-POLICE UNION	242.71	995.00	624.11	1,022.00	1,084.00	62.00	6.07%
001.2020.5132.000	CLOTHING EXPENSE	81.60	500.00	473.47	500.00	500.00	0.00	0.00%
001.2020.5290.000	INSURANCE - GENERAL	352.41	404.00	0.00	400.00	480.00	80.00	20.00%
001.2020.5300.000	INSURANCE - TORT LIAB	372.54	433.00	0.00	217.00	260.00	43.00	19.82%
001.2020.5344.000	CONTRACT-MAINTENANCE	0.00	1,200.00	690.00	690.00	750.00	60.00	8.70%
001.2020.5360.000	POSTAGE & SHIPPING	0.00	10.00	0.00	10.00	10.00	0.00	0.00%

Budget Comparison Report

Account Number		2021-2022 Total Activity	2022-2023 Total Budget	2022-2023 YTD Activity Through Feb	Parent Budget 2022-2023 FY2023 Amend	Comparison 1 Budget 2023-2024 FY2024 Dept Request	Comparison 1 to Parent Budget Increase / (Decrease)	%
001.2020.5410.000	REPAIRS & MAINTENANCE	0.00	0.00	152.99	153.00	0.00	-153.00	-100.00%
001.2020.5450.000	TELEPHONE/OTHR COMMNCT	0.00	100.00	0.00	100.00	100.00	0.00	0.00%
001.2020.5481.000	ELECTRICITY	0.00	0.00	1,270.71	2,400.00	2,400.00	0.00	0.00%
001.2020.5485.000	STORM WATER FEES	5,030.89	5,031.00	4,646.86	4,647.00	4,647.00	0.00	0.00%
001.2020.5565.000	VEHICLE OPER/MAINT SPPLY	0.00	0.00	143.25	144.00	0.00	-144.00	-100.00%
001.2020.5570.000	VEHICLE GAS	723.66	1,650.00	1,998.66	3,385.00	4,200.00	815.00	24.08%
001.2020.5600.000	OPERATING SUPPLIES	1,555.85	1,900.00	145.13	1,900.00	1,900.00	0.00	0.00%
001.2020.5980.000	REFUNDS/REIMBURSEMENTS	30.00	0.00	75.00	75.00	0.00	-75.00	-100.00%
	Total Expense:	**36,314.31**	**74,491.00**	**44,208.36**	**70,128.00**	**69,291.00**	**-837.00**	**-1.19%**
	Total Function: 2020 - Parking:	**13,642.80**	**1,709.00**	**-9,154.52**	**6,422.00**	**7,509.00**	**1,087.00**	**16.93%**
Function: 2030 - Street Lighting								
Revenue								
001.2030.4875.000	RFNDS/REIMB	-253.21	0.00	253.21	253.00	0.00	-253.00	-100.00%
	Total Revenue:	**-253.21**	**0.00**	**253.21**	**253.00**	**0.00**	**-253.00**	**-100.00%**
Expense								
001.2030.5010.010	REGULAR-NON UNION	6,111.06	9,409.00	3,826.49	6,238.00	7,724.00	1,486.00	23.82%
001.2030.5010.040	REGULAR-PPME UNION	10,755.31	10,970.00	7,164.14	23,686.00	43,039.00	19,353.00	81.71%
001.2030.5020.010	OVERTIME-NON UNION	0.00	0.00	2.32	0.00	0.00	0.00	0.00%
001.2030.5020.040	OVERTIME-PPME UNION	147.32	0.00	4.11	0.00	0.00	0.00	0.00%
001.2030.5060.010	TERM PAYOUTS-NON UNION	854.77	0.00	0.00	0.00	0.00	0.00	0.00%
001.2030.5060.040	TERM PAYOUTS-PPME UNION	209.79	0.00	0.00	0.00	0.00	0.00	0.00%
001.2030.5061.040	RHSA PAYOUTS-PPME UNION	1,896.37	0.00	0.00	0.00	0.00	0.00	0.00%
001.2030.5101.010	SOCIAL SECURITY-NON UNION	426.65	583.00	237.35	387.00	479.00	92.00	23.77%
001.2030.5101.040	SOCIAL SECURITY-PPME UNIO	649.60	680.00	406.52	1,468.00	2,668.00	1,200.00	81.74%
001.2030.5102.010	MEDICARE-NON UNION	99.61	136.00	55.58	90.00	112.00	22.00	24.44%
001.2030.5102.040	MEDICARE-PPME UNION	151.92	159.00	95.06	343.00	624.00	281.00	81.92%
001.2030.5111.010	IPERS-NON UNION	577.06	888.00	352.06	579.00	729.00	150.00	25.91%
001.2030.5111.040	IPERS-PPME UNION	877.24	1,036.00	667.30	2,227.00	4,063.00	1,836.00	82.44%
001.2030.5121.010	GRP INSUR-NON UNION	5.63	0.00	11.23	0.00	0.00	0.00	0.00%
001.2030.5121.040	GRP INSUR-PPME UNION	2,407.75	3,075.00	1,678.06	4,635.00	11,318.00	6,683.00	144.19%
001.2030.5122.000	RETIREES GRP HLTH INS	237.68	383.00	250.18	386.00	442.00	56.00	14.51%
001.2030.5123.010	WORKCOMP-NON UNION	141.21	358.00	141.19	234.00	294.00	60.00	25.64%
001.2030.5123.040	WORKCOMP-PPME UNION	267.07	417.00	270.02	898.00	1,638.00	740.00	82.41%
001.2030.5151.000	PHYSICALS/IMMUNIZATIONS	51.00	0.00	5.50	50.00	0.00	-50.00	-100.00%
001.2030.5290.000	INSURANCE - GENERAL	951.50	1,053.00	0.00	1,266.00	1,519.00	253.00	19.98%
001.2030.5300.000	INSURANCE - TORT LIAB	977.64	1,084.00	0.00	1,092.00	1,310.00	218.00	19.96%
	Total Expense:	**27,796.18**	**30,231.00**	**15,167.11**	**43,579.00**	**75,959.00**	**32,380.00**	**74.30%**
	Total Function: 2030 - Street Lighting:	**-28,049.39**	**-30,231.00**	**-14,913.90**	**-43,326.00**	**-75,959.00**	**-32,633.00**	**75.32%**

Budget Comparison Report

Account Number		2021-2022 Total Activity	2022-2023 Total Budget	2022-2023 YTD Activity Through Feb	Parent Budget 2022-2023 FY2023 Amend	Comparison 1 Budget 2023-2024 FY2024 Dept Request	Comparison 1 to Parent Budget Increase / (Decrease)	%
Function: 2040 - Traffic Safety								
Revenue								
001.2040.4875.000	REFND/REIMB: T SIGNALS	-1,519.26	0.00	1,519.26	1,519.00	0.00	-1,519.00	-100.00%
	Total Revenue:	**-1,519.26**	**0.00**	**1,519.26**	**1,519.00**	**0.00**	**-1,519.00**	**-100.00%**
Expense								
001.2040.5010.010	REGULAR-NON UNION	36,561.43	56,457.00	17,502.93	22,083.00	7,724.00	-14,359.00	-65.02%
001.2040.5010.040	REGULAR-PPME UNION	64,633.18	65,822.00	25,692.54	51,612.00	43,039.00	-8,573.00	-16.61%
001.2040.5020.010	OVERTIME-NON UNION	0.00	0.00	13.91	0.00	0.00	0.00	0.00%
001.2040.5020.040	OVERTIME-PPME UNION	883.89	0.00	4.11	0.00	0.00	0.00	0.00%
001.2040.5030.070	PART-TIME TEMPORARY	150.00	0.00	0.00	0.00	0.00	0.00	0.00%
001.2040.5060.010	TERM PAYOUTS-NON UNION	5,128.63	0.00	0.00	0.00	0.00	0.00	0.00%
001.2040.5060.040	TERM PAYOUTS-PPME UNION	1,258.68	0.00	0.00	0.00	0.00	0.00	0.00%
001.2040.5061.040	RHSA PAYOUTS-PPME UNION	11,378.22	0.00	0.00	0.00	0.00	0.00	0.00%
001.2040.5101.010	SOCIAL SECURITY-NON UNION	2,551.92	3,500.00	1,086.15	1,369.00	479.00	-890.00	-65.01%
001.2040.5101.040	SOCIAL SECURITY-PPME UNIO	3,903.23	4,081.00	1,470.60	3,200.00	2,668.00	-532.00	-16.63%
001.2040.5101.070	SOCIAL SECURITY-PT TEMP	9.30	0.00	0.00	0.00	0.00	0.00	0.00%
001.2040.5102.010	MEDICARE-NON UNION	596.85	819.00	254.01	321.00	112.00	-209.00	-65.11%
001.2040.5102.040	MEDICARE-PPME UNION	912.78	954.00	343.89	749.00	624.00	-125.00	-16.69%
001.2040.5102.070	MEDICARE-TEMPORARY	2.18	0.00	0.00	0.00	0.00	0.00	0.00%
001.2040.5111.010	IPERS-NON UNION	3,451.25	5,329.00	1,596.88	2,028.00	729.00	-1,299.00	-64.05%
001.2040.5111.040	IPERS-PPME UNION	5,273.12	6,214.00	2,369.02	4,816.00	4,063.00	-753.00	-15.64%
001.2040.5121.010	GRP INSUR-NON UNION	0.00	0.00	67.38	0.00	0.00	0.00	0.00%
001.2040.5121.040	GRP INSUR-PPME UNION	14,479.85	18,452.00	5,576.68	10,025.00	11,318.00	1,293.00	12.90%
001.2040.5122.000	RETIREES GRP HLTH INS	1,425.92	2,299.00	1,501.00	2,340.00	2,693.00	353.00	15.09%
001.2040.5123.010	WORKCOMP-NON UNION	847.24	2,147.00	639.25	818.00	294.00	-524.00	-64.06%
001.2040.5123.040	WORKCOMP-PPME UNION	1,602.02	2,503.00	960.77	1,942.00	1,638.00	-304.00	-15.65%
001.2040.5123.070	WORKCOMP-TEMPORARY	3.01	0.00	0.00	0.00	0.00	0.00	0.00%
001.2040.5132.000	CLOTHING EXPENSE	115.56	200.00	0.00	200.00	200.00	0.00	0.00%
001.2040.5151.000	PHYSICALS/IMMUNIZATIONS	305.98	0.00	33.00	50.00	0.00	-50.00	-100.00%
001.2040.5230.000	CONSULTING & PROF FEES	0.00	0.00	30.60	31.00	0.00	-31.00	-100.00%
001.2040.5290.000	INSURANCE - GENERAL	5,573.65	6,236.00	0.00	7,147.00	8,576.00	1,429.00	19.99%
001.2040.5300.000	INSURANCE - TORT LIAB	1,007.06	1,507.00	0.00	970.00	1,164.00	194.00	20.00%
	Total Expense:	**162,054.95**	**176,520.00**	**59,142.72**	**109,701.00**	**85,321.00**	**-24,380.00**	**-22.22%**
	Total Function: 2040 - Traffic Safety:	**-163,574.21**	**-176,520.00**	**-57,623.46**	**-108,182.00**	**-85,321.00**	**22,861.00**	**-21.13%**
Function: 2050 - Snow Removal								
Expense								
001.2050.5010.010	REGULAR-NON UNION	764.06	0.00	269.60	0.00	0.00	0.00	0.00%
001.2050.5010.040	REGULAR-PPME UNION	38,934.49	0.00	46,766.27	0.00	0.00	0.00	0.00%

Budget Comparison Report

Account Number		2021-2022 Total Activity	2022-2023 Total Budget	2022-2023 YTD Activity Through Feb	Parent Budget 2022-2023 FY2023 Amend	Comparison 1 Budget 2023-2024 FY2024 Dept Request	Comparison 1 to Parent Budget Increase / (Decrease)	%
001.2050.5010.090	REGULAR-P&R UNION	3,192.51	0.00	5,286.40	0.00	0.00	0.00	0.00%
001.2050.5020.010	OVERTIME-NON UNION	0.00	0.00	462.45	0.00	0.00	0.00	0.00%
001.2050.5020.040	OVERTIME-PPME UNION	7,130.00	40,000.00	19,613.15	40,000.00	40,000.00	0.00	0.00%
001.2050.5020.090	OVERTIME-P&R UNION	0.00	0.00	449.07	0.00	0.00	0.00	0.00%
001.2050.5101.010	SOCIAL SECURITY-NON UNION	45.90	0.00	43.60	0.00	0.00	0.00	0.00%
001.2050.5101.040	SOCIAL SECURITY-PPME UNIOI	2,690.52	3,060.00	3,927.57	3,060.00	3,060.00	0.00	0.00%
001.2050.5101.090	SOCIAL SECURITY-P&R UNION	180.68	0.00	327.02	0.00	0.00	0.00	0.00%
001.2050.5102.010	MEDICARE-NON UNION	10.74	0.00	10.20	0.00	0.00	0.00	0.00%
001.2050.5102.040	MEDICARE-PPME UNION	629.21	580.00	918.68	580.00	580.00	0.00	0.00%
001.2050.5102.090	MEDICARE-P&R UNION	42.26	0.00	76.49	0.00	0.00	0.00	0.00%
001.2050.5111.010	IPERS-NON UNION	72.13	0.00	69.10	0.00	0.00	0.00	0.00%
001.2050.5111.040	IPERS-PPME UNION	4,348.48	0.00	6,167.27	0.00	0.00	0.00	0.00%
001.2050.5111.090	IPERS-P&R UNION	301.34	0.00	541.46	0.00	0.00	0.00	0.00%
001.2050.5121.010	GRP INSUR-NON UNION	68.65	0.00	107.45	0.00	0.00	0.00	0.00%
001.2050.5121.040	GRP INSUR-PPME UNION	11,594.37	0.00	15,788.72	0.00	0.00	0.00	0.00%
001.2050.5121.090	GRP INSUR-P&R UNION	889.87	0.00	1,991.57	0.00	0.00	0.00	0.00%
001.2050.5123.010	WORKCOMP-NON UNION	15.16	0.00	29.78	0.00	0.00	0.00	0.00%
001.2050.5123.040	WORKCOMP-PPME UNION	1,032.76	0.00	2,703.25	0.00	0.00	0.00	0.00%
001.2050.5123.090	WORKCOMP-P&R UNION	71.55	0.00	233.35	0.00	0.00	0.00	0.00%
001.2050.5300.000	INSURANCE - TORT LIAB	1,817.67	1,294.00	0.00	1,154.00	1,385.00	231.00	20.02%
	Total Expense:	**73,832.35**	**44,934.00**	**105,782.45**	**44,794.00**	**45,025.00**	**231.00**	**0.52%**
	Total Function: 2050 - Snow Removal:	**73,832.35**	**44,934.00**	**105,782.45**	**44,794.00**	**45,025.00**	**231.00**	**0.52%**
Function: 2055 - Tree Removal								
Expense								
001.2055.5010.010	REGULAR-NON UNION	2,678.51	0.00	1,867.09	0.00	0.00	0.00	0.00%
001.2055.5101.010	SOCIAL SECURITY-NON UNION	157.88	0.00	110.56	0.00	0.00	0.00	0.00%
001.2055.5102.010	MEDICARE-NON UNION	36.90	0.00	25.94	0.00	0.00	0.00	0.00%
001.2055.5111.010	IPERS-NON UNION	252.88	0.00	172.59	0.00	0.00	0.00	0.00%
001.2055.5121.010	GRP INSUR-NON UNION	558.92	0.00	401.78	0.00	0.00	0.00	0.00%
001.2055.5123.010	WORKCOMP-NON UNION	43.28	0.00	53.08	0.00	0.00	0.00	0.00%
	Total Expense:	**3,728.37**	**0.00**	**2,631.04**	**0.00**	**0.00**	**0.00**	**0.00%**
	Total Function: 2055 - Tree Removal:	**3,728.37**	**0.00**	**2,631.04**	**0.00**	**0.00**	**0.00**	**0.00%**
Function: 2060 - Highway Engineering								
Revenue								
001.2060.4267.000	STREET EXCVN/CURB CUT	0.00	0.00	26.00	0.00	0.00	0.00	0.00%
001.2060.4270.000	EXCAVATION PERMITS	0.00	0.00	270.00	0.00	0.00	0.00	0.00%
001.2060.4276.000	DRIVEWAY PERMIT	0.00	0.00	68.00	0.00	0.00	0.00	0.00%

Budget Comparison Report

Account Number		2021-2022 Total Activity	2022-2023 Total Budget	2022-2023 YTD Activity Through Feb	Parent Budget 2022-2023 FY2023 Amend	Comparison 1 Budget 2023-2024 FY2024 Dept Request	Comparison 1 to Parent Budget Increase / (Decrease)	%
001.2060.4487.000	ENGINEERING SERVICES	1,041.00	800.00	1,376.00	1,400.00	800.00	-600.00	-42.86%
	Total Revenue:	**1,041.00**	**800.00**	**1,740.00**	**1,400.00**	**800.00**	**-600.00**	**-42.86%**
Expense								
001.2060.5010.010	REGULAR-NON UNION	309,451.70	281,058.00	150,941.50	249,287.00	296,628.00	47,341.00	18.99%
001.2060.5030.070	PART-TIME TEMPORARY	14,793.50	6,000.00	8,141.25	15,500.00	15,000.00	-500.00	-3.23%
001.2060.5060.010	TERM PAYOUTS-NON UNION	5,588.53	0.00	0.00	0.00	0.00	0.00	0.00%
001.2060.5101.010	SOCIAL SECURITY-NON UNION	18,746.66	17,426.00	9,014.06	15,456.00	18,391.00	2,935.00	18.99%
001.2060.5101.070	SOCIAL SECURITY-PT TEMP	917.23	372.00	504.79	961.00	930.00	-31.00	-3.23%
001.2060.5102.010	MEDICARE-NON UNION	4,384.26	4,075.00	2,108.22	3,615.00	4,301.00	686.00	18.98%
001.2060.5102.070	MEDICARE-TEMPORARY	214.56	87.00	118.05	225.00	218.00	-7.00	-3.11%
001.2060.5111.010	IPERS-NON UNION	29,212.43	26,532.00	13,859.16	23,143.00	28,002.00	4,859.00	21.00%
001.2060.5111.070	IPERS-PT TEMP	615.13	566.00	446.67	1,416.00	661.00	-755.00	-53.32%
001.2060.5121.010	GRP INSUR-NON UNION	54,781.08	54,772.00	25,768.15	46,813.00	61,082.00	14,269.00	30.48%
001.2060.5123.010	WORKCOMP-NON UNION	3,110.24	4,999.00	2,591.39	4,301.00	5,282.00	981.00	22.81%
001.2060.5123.070	WORKCOMP-TEMPORARY	96.98	10.00	64.80	25.00	25.00	0.00	0.00%
001.2060.5230.000	CONSULTING & PROF FEES	1,305.00	3,500.00	1,620.00	3,500.00	3,500.00	0.00	0.00%
001.2060.5290.000	INSURANCE - GENERAL	1,836.07	2,002.00	0.00	2,359.00	2,831.00	472.00	20.01%
001.2060.5300.000	INSURANCE - TORT LIAB	2,465.34	3,029.00	0.00	2,426.00	2,911.00	485.00	19.99%
001.2060.5344.000	CONTRACT-MAINTENANCE	293.24	250.00	158.94	250.00	250.00	0.00	0.00%
001.2060.5360.000	POSTAGE & SHIPPING	0.00	0.00	27.50	40.00	50.00	10.00	25.00%
	Total Expense:	**447,811.95**	**404,678.00**	**215,364.48**	**369,317.00**	**440,062.00**	**70,745.00**	**19.16%**
	Total Function: 2060 - Highway Engineering:	**-446,770.95**	**-403,878.00**	**-213,624.48**	**-367,917.00**	**-439,262.00**	**-71,345.00**	**19.39%**
Function: 2080 - Airport								
Revenue								
001.2080.4310.000	AIRPORT-FED OPER GRNT/REII	45,000.00	0.00	0.00	0.00	0.00	0.00	0.00%
001.2080.4453.000	AIRPORT SERVICES & USES	5,561.64	6,000.00	6,181.92	6,500.00	6,500.00	0.00	0.00%
001.2080.4492.000	AIRPORT MISC CHRGS	0.00	0.00	500.00	500.00	500.00	0.00	0.00%
001.2080.4622.000	ADM - Rent - Farm - Airport	21,256.45	20,700.00	5,984.10	26,093.00	23,442.00	-2,651.00	-10.16%
001.2080.4623.000	AIRPORT RENTAL	27,823.06	28,000.00	19,064.00	28,000.00	28,000.00	0.00	0.00%
001.2080.4875.000	RFNDS/REIMB: AIRPORT	1,732.31	0.00	19.00	19.00	0.00	-19.00	-100.00%
	Total Revenue:	**101,373.46**	**54,700.00**	**31,749.02**	**61,112.00**	**58,442.00**	**-2,670.00**	**-4.37%**
Expense								
001.2080.5230.000	CONSULTING & PROF FEES	360.00	0.00	0.00	0.00	0.00	0.00	0.00%
001.2080.5251.000	LICENSE & PERMITS	130.00	705.00	130.00	130.00	130.00	0.00	0.00%
001.2080.5290.000	INSURANCE - GENERAL	12,408.67	14,392.00	6,769.00	22,215.00	26,658.00	4,443.00	20.00%
001.2080.5300.000	INSURANCE - TORT LIAB	307.10	282.00	0.00	311.00	373.00	62.00	19.94%
001.2080.5342.000	CONTRACT-OUTSIDE HELP	18,157.28	31,000.00	18,664.00	31,000.00	32,500.00	1,500.00	4.84%
001.2080.5344.000	CONTRACT-MAINTENANCE	8,649.00	30,000.00	17,264.00	30,000.00	30,000.00	0.00	0.00%

Budget Comparison Report

Account Number		2021-2022 Total Activity	2022-2023 Total Budget	2022-2023 YTD Activity Through Feb	Parent Budget 2022-2023 FY2023 Amend	Comparison 1 Budget 2023-2024 FY2024 Dept Request	Comparison 1 to Parent Budget Increase / (Decrease)	%
001.2080.5410.000	REPAIRS & MAINTENANCE	19,592.61	15,000.00	4,725.01	15,000.00	15,000.00	0.00	0.00%
001.2080.5440.000	TAXES PAID	0.00	2,200.00	0.00	0.00	0.00	0.00	0.00%
001.2080.5450.000	TELEPHONE/OTHR COMMNCT	1,290.21	450.00	240.40	400.00	450.00	50.00	12.50%
001.2080.5481.000	ELECTRICITY	2,220.87	5,000.00	5,929.44	10,000.00	10,000.00	0.00	0.00%
001.2080.5483.000	WATER	2,032.02	2,000.00	1,112.32	2,000.00	2,000.00	0.00	0.00%
001.2080.5484.000	PROPANE	3,998.09	3,000.00	10,232.00	9,000.00	9,000.00	0.00	0.00%
001.2080.5565.000	VEHICLE OPER/MAINT SPPLY	1,404.28	2,200.00	1,507.85	2,200.00	2,200.00	0.00	0.00%
001.2080.5571.000	VEHICLE DIESEL FUEL	4,873.85	5,000.00	4,416.57	6,500.00	6,500.00	0.00	0.00%
001.2080.5600.000	OPERATING SUPPLIES	4,611.01	3,000.00	257.25	3,000.00	3,000.00	0.00	0.00%
001.2080.5718.000	MINOR EQUIP, UNCLASSIFIED	3,462.25	0.00	0.00	0.00	0.00	0.00	0.00%
001.2080.5776.000	BUILDINGS & IMPROVEMENTS	6,873.13	2,000.00	175.00	2,000.00	2,000.00	0.00	0.00%
001.2080.5980.000	REFUNDS/REIMB	0.00	0.00	277.15	278.00	0.00	-278.00	-100.00%
	Total Expense:	**90,370.37**	**116,229.00**	**71,699.99**	**134,034.00**	**139,811.00**	**5,777.00**	**4.31%**
	Total Function: 2080 - Airport:	**11,003.09**	**-61,529.00**	**-39,950.97**	**-72,922.00**	**-81,369.00**	**-8,447.00**	**11.58%**
Function: 2090 - Garbage								
Revenue								
001.2090.4277.000	GARBAGE LICENSES	100.00	0.00	0.00	0.00	0.00	0.00	0.00%
001.2090.4446.000	SOLID WASTE FEES	147,660.31	150,000.00	98,917.61	150,000.00	150,000.00	0.00	0.00%
	Total Revenue:	**147,760.31**	**150,000.00**	**98,917.61**	**150,000.00**	**150,000.00**	**0.00**	**0.00%**
Expense								
001.2090.5220.000	COLLECTION COSTS/REFUNDS	3,070.20	3,500.00	1,811.85	3,500.00	3,500.00	0.00	0.00%
001.2090.5331.000	PAYMENTS-OTHER ENTITIES	110,364.00	110,208.00	55,182.00	110,208.00	110,208.00	0.00	0.00%
	Total Expense:	**113,434.20**	**113,708.00**	**56,993.85**	**113,708.00**	**113,708.00**	**0.00**	**0.00%**
	Total Function: 2090 - Garbage:	**34,326.11**	**36,292.00**	**41,923.76**	**36,292.00**	**36,292.00**	**0.00**	**0.00%**
Function: 2095 - Mosquito/Pest Control								
Revenue								
001.2095.4875.000	RFNDS/REIMB	0.00	0.00	536.12	536.00	0.00	-536.00	-100.00%
	Total Revenue:	**0.00**	**0.00**	**536.12**	**536.00**	**0.00**	**-536.00**	**-100.00%**
Expense								
001.2095.5616.000	MOSQUITO SPRAYING	0.00	4,000.00	0.00	4,000.00	4,000.00	0.00	0.00%
	Total Expense:	**0.00**	**4,000.00**	**0.00**	**4,000.00**	**4,000.00**	**0.00**	**0.00%**
	Total Function: 2095 - Mosquito/Pest Control:	**0.00**	**-4,000.00**	**536.12**	**-3,464.00**	**-4,000.00**	**-536.00**	**15.47%**
Function: 2900 - Other Public Works								
Revenue								
001.2900.4266.000	DEMOL,MOVING,ENCROACHM	50.00	100.00	100.00	100.00	100.00	0.00	0.00%
001.2900.4271.000	SEPTIC TANK INSTALLATION	0.00	0.00	59.00	59.00	0.00	-59.00	-100.00%
001.2900.4491.000	MAPS/BLUE PRTS/SALES/CHR(	11.00	14.00	4.00	14.00	14.00	0.00	0.00%

Budget Comparison Report

Account Number		2021-2022 Total Activity	2022-2023 Total Budget	2022-2023 YTD Activity Through Feb	Parent Budget 2022-2023 FY2023 Amend	Comparison 1 Budget 2023-2024 FY2024 Dept Request	Comparison 1 to Parent Budget Increase / (Decrease)	%
001.2900.4492.000	PUBLIC WORKS MISC. CHARGE	1,449.84	1,500.00	139.00	200.00	200.00	0.00	0.00%
001.2900.4616.000	INT CHRGD - ACCTS REC	3.61	0.00	10.52	10.00	0.00	-10.00	-100.00%
001.2900.4875.000	REFNDS/REIMB	0.00	0.00	0.00	0.00	0.00	0.00	0.00%
	Total Revenue:	**1,514.45**	**1,614.00**	**312.52**	**383.00**	**314.00**	**-69.00**	**-18.02%**
	Total Function: 2900 - Other Public Works:	**1,514.45**	**1,614.00**	**312.52**	**383.00**	**314.00**	**-69.00**	**-18.02%**
Function: 4010 - Library Services								
Revenue								
001.4010.4011.000	DELIQUENT PROPERTY TAXES	766.81	0.00	146.70	0.00	0.00	0.00	0.00%
001.4010.4040.000	PROPERTY TAXES CURRENT LIE	203,589.22	227,998.00	121,505.18	227,998.00	223,538.00	-4,460.00	-1.96%
001.4010.4110.000	UTILITY EXCISE TAX	24,661.13	22,016.00	11,864.46	22,016.00	27,359.00	5,343.00	24.27%
001.4010.4150.000	CURRENT MOBILE HOME TAXE	205.65	260.00	142.27	260.00	260.00	0.00	0.00%
001.4010.4151.000	DELIQ MOBILE HOME TAXES	12.27	0.00	16.07	0.00	0.00	0.00	0.00%
001.4010.4330.000	STATE OPER GRANT	14,804.79	14,932.00	14,419.83	14,932.00	14,932.00	0.00	0.00%
001.4010.4332.000	AGED INCOME CREDIT	229.38	0.00	202.91	0.00	0.00	0.00	0.00%
001.4010.4333.000	DISABLED HOMESTEAD CREDI	705.72	0.00	332.49	0.00	0.00	0.00	0.00%
001.4010.4335.000	HOMESTEAD CREDIT	7,423.96	0.00	3,662.83	0.00	0.00	0.00	0.00%
001.4010.4336.000	MILITARY CREDIT	0.00	0.00	78.99	0.00	0.00	0.00	0.00%
001.4010.4337.000	MOBILE HOME CREDIT	0.00	0.00	0.48	0.00	0.00	0.00	0.00%
001.4010.4338.000	BUSINESS PROP TAX CREDIT	6,981.14	0.00	3,630.32	0.00	7,071.00	7,071.00	0.00%
001.4010.4339.000	SF295 BACKFILL	6,679.56	5,894.00	2,943.32	5,886.00	4,992.00	-894.00	-15.19%
001.4010.4350.000	LOCAL/COUNTY GRANTS	36,182.59	35,966.00	39,510.00	39,410.00	37,500.00	-1,910.00	-4.85%
001.4010.4493.000	LIBRARY BOOK CHRGS	8,267.79	7,100.00	2,389.29	7,100.00	8,280.00	1,180.00	16.62%
001.4010.4550.000	LIBRARY FINES	1,842.23	400.00	542.80	400.00	660.00	260.00	65.00%
001.4010.4875.000	RFNDS/REIMB: LIBRARY	359.85	100.00	1,283.38	1,300.00	100.00	-1,200.00	-92.31%
001.4010.4876.000	MISC REV	5,820.80	9,000.00	5,039.92	9,000.00	7,800.00	-1,200.00	-13.33%
	Total Revenue:	**318,532.89**	**323,666.00**	**207,711.24**	**328,302.00**	**332,492.00**	**4,190.00**	**1.28%**
Expense								
001.4010.5010.010	REGULAR-NON UNION	527,676.95	550,914.00	361,660.13	558,914.00	571,108.00	12,194.00	2.18%
001.4010.5050.060	PART-TIME REGULAR	152,227.12	239,906.00	124,243.94	243,477.00	242,875.00	-602.00	-0.25%
001.4010.5060.010	TERM PAYOUTS-NON UNION	0.00	0.00	3,412.58	0.00	0.00	0.00	0.00%
001.4010.5061.010	RHSA PAYOUTS-NON UNION	0.00	0.00	0.00	9,400.00	0.00	-9,400.00	-100.00%
001.4010.5101.010	SOCIAL SECURITY-NON UNION	31,352.77	34,157.00	21,740.88	34,653.00	35,409.00	756.00	2.18%
001.4010.5101.060	SOCIAL SECURITY-PT REGULAR	9,447.80	14,874.00	7,721.63	15,096.00	15,058.00	-38.00	-0.25%
001.4010.5101.070	SOCIAL SECURITY-PT TEMP	5.39	0.00	0.00	0.00	0.00	0.00	0.00%
001.4010.5102.010	MEDICARE-NON UNION	7,332.47	7,988.00	5,084.57	8,104.00	8,281.00	177.00	2.18%
001.4010.5102.060	MEDICARE-PT REGULAR	2,209.62	3,479.00	1,805.95	3,530.00	3,522.00	-8.00	-0.23%
001.4010.5102.070	MEDICARE-TEMPORARY	1.26	0.00	0.00	0.00	0.00	0.00	0.00%
001.4010.5111.010	IPERS-NON UNION	49,812.71	52,006.00	33,385.29	52,006.00	53,913.00	1,907.00	3.67%

Budget Comparison Report

Account Number		2021-2022 Total Activity	2022-2023 Total Budget	2022-2023 YTD Activity Through Feb	Parent Budget 2022-2023 FY2023 Amend	Comparison 1 Budget 2023-2024 FY2024 Dept Request	Comparison 1 to Parent Budget Increase / (Decrease)	%
001.4010.5111.060	IPERS-PT REGULAR	13,779.19	22,647.00	10,567.26	22,418.00	22,927.00	509.00	2.27%
001.4010.5111.070	IPERS-PT TEMP	-43.57	0.00	0.00	0.00	0.00	0.00	0.00%
001.4010.5121.010	GRP INSUR-NON UNION	71,496.12	78,693.00	48,673.72	82,721.00	87,713.00	4,992.00	6.03%
001.4010.5122.000	RETIREES GRP HLTH INS	3,480.72	3,831.00	2,501.62	3,893.00	4,474.00	581.00	14.92%
001.4010.5123.010	WORKCOMP-NON UNION	469.52	899.00	583.59	900.00	933.00	33.00	3.67%
001.4010.5123.060	WORKCOMP-PT REGULAR	135.69	392.00	193.78	388.00	397.00	9.00	2.32%
001.4010.5123.070	WORKCOMP-TEMPORARY	0.08	0.00	0.00	0.00	0.00	0.00	0.00%
001.4010.5151.000	PHYSICALS/IMMUNIZATIONS	1,063.00	800.00	601.00	800.00	800.00	0.00	0.00%
001.4010.5210.000	ADVERTISING & LEGAL PUB	95.76	200.00	870.00	200.00	200.00	0.00	0.00%
001.4010.5215.000	BANK CHARGES	831.65	700.00	152.63	700.00	700.00	0.00	0.00%
001.4010.5216.000	BACKGROUND CHECKS	138.00	120.00	90.00	120.00	120.00	0.00	0.00%
001.4010.5251.000	LICENSE & PERMITS	469.00	750.00	2,106.00	2,850.00	750.00	-2,100.00	-73.68%
001.4010.5280.000	DUES, MEMBER, SUBSCRIPTN	1,326.00	1,600.00	503.00	1,600.00	1,600.00	0.00	0.00%
001.4010.5290.000	INSURANCE - GENERAL	14,436.36	18,972.00	0.00	22,746.00	27,295.00	4,549.00	20.00%
001.4010.5300.000	INSURANCE - TORT LIAB	5,096.59	6,294.00	0.00	5,195.00	6,234.00	1,039.00	20.00%
001.4010.5342.000	CONTRACT-OUTSIDE HELP	25,460.69	28,600.00	17,560.24	28,600.00	28,600.00	0.00	0.00%
001.4010.5343.000	CONTRACT-PROMOTIONS/PGI	6,248.06	6,500.00	1,178.76	6,500.00	6,500.00	0.00	0.00%
001.4010.5344.000	CONTRACT-MAINTENANCE	26,582.94	20,000.00	16,128.63	20,000.00	20,000.00	0.00	0.00%
001.4010.5347.000	CONTRACT-SOFTWARE MAINT	14,369.61	15,000.00	7,190.04	15,000.00	15,000.00	0.00	0.00%
001.4010.5360.000	POSTAGE & SHIPPING	2,050.10	2,000.00	86.39	2,000.00	2,000.00	0.00	0.00%
001.4010.5370.000	PRINTING & BINDING	70.45	300.00	0.00	300.00	300.00	0.00	0.00%
001.4010.5380.000	RENTS & LEASES	360.00	400.00	0.00	400.00	400.00	0.00	0.00%
001.4010.5386.000	CONTRACT LAWN CARE	4,000.80	4,400.00	2,180.00	4,400.00	4,400.00	0.00	0.00%
001.4010.5410.000	REPAIRS & MAINTENANCE	8,837.61	9,000.00	2,913.09	9,000.00	9,000.00	0.00	0.00%
001.4010.5450.000	TELEPHONE/OTHR COMMNCT	6,365.47	6,800.00	4,672.23	6,800.00	6,800.00	0.00	0.00%
001.4010.5460.000	CONFERENCE EXPENSE	705.00	500.00	436.37	500.00	500.00	0.00	0.00%
001.4010.5461.000	TRAVEL-AIRFARE	497.20	0.00	0.00	0.00	0.00	0.00	0.00%
001.4010.5464.000	TRAVEL-PER DIEM	0.00	200.00	0.00	200.00	200.00	0.00	0.00%
001.4010.5465.000	TRAVEL - HOTEL/MOTEL	0.00	500.00	378.82	500.00	500.00	0.00	0.00%
001.4010.5481.000	ELECTRICITY	41,254.69	40,000.00	30,498.17	45,000.00	45,000.00	0.00	0.00%
001.4010.5482.000	NATURAL GAS	7,692.84	9,500.00	4,067.21	10,500.00	10,500.00	0.00	0.00%
001.4010.5485.000	STORM WATER FEES	1,100.79	1,101.00	1,100.79	1,101.00	1,101.00	0.00	0.00%
001.4010.5565.000	VEHICLE OPER/MAINT SPPLY	0.00	1,000.00	0.00	1,000.00	2,000.00	1,000.00	100.00%
001.4010.5570.000	VEHICLE GAS	0.00	3,000.00	0.00	3,000.00	5,000.00	2,000.00	66.67%
001.4010.5600.000	OPERATING SUPPLIES	17,859.59	26,000.00	8,635.17	24,000.00	24,000.00	0.00	0.00%
001.4010.5601.000	PROMOTION/PROGRAM SPPL'	3,045.65	2,500.00	1,924.20	2,500.00	2,500.00	0.00	0.00%
001.4010.5605.000	OFFICE SUPPLIES	1,623.52	1,500.00	1,033.62	1,500.00	1,500.00	0.00	0.00%
001.4010.5611.000	BLDG,GRD OPER/MAINT SPLY	1,500.24	0.00	475.75	1,500.00	1,500.00	0.00	0.00%
001.4010.5612.000	COMPUTER COMPONENTS	43.50	500.00	0.00	500.00	500.00	0.00	0.00%

Budget Comparison Report

Account Number		2021-2022 Total Activity	2022-2023 Total Budget	2022-2023 YTD Activity Through Feb	Parent Budget 2022-2023 FY2023 Amend	Comparison 1 Budget 2023-2024 FY2024 Dept Request	Comparison 1 to Parent Budget Increase / (Decrease)	%
001.4010.5703.000	MINOR COMPUTER	11,786.98	7,000.00	2,864.63	7,000.00	7,000.00	0.00	0.00%
001.4010.5704.000	MINOR SOFTWARE <$5,000	445.00	0.00	1,908.57	2,000.00	0.00	-2,000.00	-100.00%
001.4010.5718.000	MINOR EQUIP, UNCLASSFIED	30,523.58	13,930.00	3,241.64	13,930.00	13,930.00	0.00	0.00%
001.4010.5730.000	REFERENCE MATERIALS	8,470.01	8,500.00	2,822.49	8,500.00	8,500.00	0.00	0.00%
001.4010.5731.000	LIBRARY PERIODICALS	6,460.73	9,000.00	3,731.77	9,000.00	9,000.00	0.00	0.00%
001.4010.5732.000	LIBRARY BOOKS, FILM RCRD	101,782.44	111,000.00	49,148.09	111,000.00	111,000.00	0.00	0.00%
001.4010.5734.000	LOST BOOKS	9,095.79	7,100.00	3,657.77	7,100.00	7,100.00	0.00	0.00%
001.4010.5736.000	LIBRARY DATABASES	29,086.52	24,000.00	9,438.20	24,000.00	24,000.00	0.00	0.00%
001.4010.5980.000	REFUNDS/REIMB	183.13	0.00	171.51	125.00	0.00	-125.00	-100.00%
001.4010.5990.000	CASH SHORT & (OVER)	-6.91	0.00	0.03	0.00	0.00	0.00	0.00%
	Total Expense:	**1,260,336.22**	**1,399,053.00**	**803,341.75**	**1,437,167.00**	**1,452,640.00**	**15,473.00**	**1.08%**
	Total Function: 4010 - Library Services:	**-941,803.33**	**-1,075,387.00**	**-595,630.51**	**-1,108,865.00**	**-1,120,148.00**	**-11,283.00**	**1.02%**
Function: 4020 - Museum, Band, Theater								
Expense								
001.4020.5331.000	PAYMENTS-OTHER ENTITIES	11,263.76	11,000.00	6,093.96	11,000.00	9,000.00	-2,000.00	-18.18%
	Total Expense:	**11,263.76**	**11,000.00**	**6,093.96**	**11,000.00**	**9,000.00**	**-2,000.00**	**-18.18%**
	Total Function: 4020 - Museum, Band, Theater:	**11,263.76**	**11,000.00**	**6,093.96**	**11,000.00**	**9,000.00**	**-2,000.00**	**-18.18%**
Function: 4030 - Parks								
Revenue								
001.4030.4472.000	PARK FEES & RENTALS	68,631.66	60,000.00	51,467.48	68,000.00	68,000.00	0.00	0.00%
001.4030.4473.000	RECREATION FEES	-7.21	0.00	0.00	0.00	0.00	0.00	0.00%
001.4030.4492.000	P&R MISC CHRGS	0.00	0.00	60.00	0.00	0.00	0.00	0.00%
001.4030.4540.000	PENALTIES/DELIQUENT	8.95	0.00	0.00	0.00	0.00	0.00	0.00%
001.4030.4616.000	INT CHRGD - ACCS REC	-3.45	0.00	10.36	0.00	0.00	0.00	0.00%
001.4030.4875.000	RFNDS/REIMB: P&R	1,195.57	1,500.00	80.94	1,000.00	1,000.00	0.00	0.00%
001.4030.4879.000	REBATES	0.00	0.00	70.15	0.00	0.00	0.00	0.00%
001.4030.4960.000	SALE OF F.A.-PARKS	0.00	200.00	1.00	200.00	200.00	0.00	0.00%
	Total Revenue:	**69,825.52**	**61,700.00**	**51,689.93**	**69,200.00**	**69,200.00**	**0.00**	**0.00%**
Expense								
001.4030.5010.010	REGULAR-NON UNION	112,758.71	107,883.00	79,222.42	123,499.00	128,879.00	5,380.00	4.36%
001.4030.5010.090	REGULAR-P&R UNION	185,539.50	187,876.00	119,809.97	202,770.00	207,265.00	4,495.00	2.22%
001.4030.5020.090	OVERTIME-P&R UNION	329.50	1,000.00	301.34	1,000.00	1,000.00	0.00	0.00%
001.4030.5030.070	PART-TIME TEMPORARY	23,553.44	28,000.00	17,014.93	39,313.00	39,786.00	473.00	1.20%
001.4030.5050.060	PART-TIME REGULAR	0.00	12,874.00	225.11	0.00	0.00	0.00	0.00%
001.4030.5056.040	OTHR DEPT-PPME UNION	2,281.03	0.00	962.51	0.00	0.00	0.00	0.00%
001.4030.5060.090	TERM PAYOUTS-P&R UNION	0.00	0.00	716.09	0.00	0.00	0.00	0.00%
001.4030.5101.010	SOCIAL SECURITY-NON UNION	6,773.81	6,689.00	4,738.83	7,657.00	7,991.00	334.00	4.36%
001.4030.5101.040	SOCIAL SECURITY-PPME UNIO	135.71	0.00	58.22	0.00	0.00	0.00	0.00%

Budget Comparison Report

Account Number		2021-2022 Total Activity	2022-2023 Total Budget	2022-2023 YTD Activity Through Feb	Parent Budget 2022-2023 FY2023 Amend	Comparison 1 Budget 2023-2024 FY2024 Dept Request	Comparison 1 to Parent Budget Increase / (Decrease)	%
001.4030.5101.060	SOCIAL SECURITY-PT REGULAR	0.00	798.00	13.96	0.00	0.00	0.00	0.00%
001.4030.5101.070	SOCIAL SECURITY-PT TEMP	1,460.30	1,736.00	1,054.95	2,437.00	2,467.00	30.00	1.23%
001.4030.5101.090	SOCIAL SECURITY-P&R UNION	10,719.06	11,648.00	6,927.93	12,572.00	12,850.00	278.00	2.21%
001.4030.5102.010	MEDICARE-NON UNION	1,584.31	1,565.00	1,108.26	1,790.00	1,869.00	79.00	4.41%
001.4030.5102.040	MEDICARE-PPME UNION	31.75	0.00	13.61	0.00	0.00	0.00	0.00%
001.4030.5102.060	MEDICARE-PT REGULAR	0.00	187.00	3.26	0.00	0.00	0.00	0.00%
001.4030.5102.070	MEDICARE-TEMPORARY	341.52	406.00	246.71	570.00	577.00	7.00	1.23%
001.4030.5102.090	MEDICARE-P&R UNION	2,506.96	2,723.00	1,620.33	2,940.00	3,005.00	65.00	2.21%
001.4030.5111.010	IPERS-NON UNION	10,721.77	10,184.00	7,323.85	11,500.00	12,166.00	666.00	5.79%
001.4030.5111.040	IPERS-PPME UNION	215.34	0.00	90.87	0.00	0.00	0.00	0.00%
001.4030.5111.060	IPERS-PT REGULAR	0.00	1,215.00	0.00	0.00	0.00	0.00	0.00%
001.4030.5111.070	IPERS-PT TEMP	934.25	0.00	567.03	567.00	1,113.00	546.00	96.30%
001.4030.5111.090	IPERS-P&R UNION	17,545.89	17,736.00	10,960.87	18,764.00	19,566.00	802.00	4.27%
001.4030.5121.010	GRP INSUR-NON UNION	19,261.05	19,289.00	13,962.38	23,187.00	24,555.00	1,368.00	5.90%
001.4030.5121.040	GRP INSUR-PPME UNION	446.44	0.00	211.51	0.00	0.00	0.00	0.00%
001.4030.5121.090	GRP INSUR-P&R UNION	46,937.45	49,565.00	33,633.59	54,556.00	66,822.00	12,266.00	22.48%
001.4030.5122.000	RETIREES GRP HLTH INS	15,190.46	15,325.00	10,614.56	18,553.00	22,371.00	3,818.00	20.58%
001.4030.5123.010	WORKCOMP-NON UNION	1,081.35	2,486.00	1,342.04	2,895.00	3,069.00	174.00	6.01%
001.4030.5123.040	WORKCOMP-PPME UNION	29.02	0.00	22.02	0.00	0.00	0.00	0.00%
001.4030.5123.060	WORKCOMP-PT REGULAR	0.00	374.00	5.57	0.00	0.00	0.00	0.00%
001.4030.5123.070	WORKCOMP-TEMPORARY	336.24	813.00	468.83	1,143.00	1,157.00	14.00	1.22%
001.4030.5123.090	WORKCOMP-P&R UNION	2,999.97	5,457.00	3,397.61	5,781.00	6,028.00	247.00	4.27%
001.4030.5132.000	CLOTHING EXPENSE	2,943.46	2,000.00	1,755.74	2,000.00	2,000.00	0.00	0.00%
001.4030.5132.010	CIOTHING EXPENSES NON UNI	145.94	200.00	0.00	200.00	200.00	0.00	0.00%
001.4030.5151.000	PHYSICALS/IMMUNIZATIONS	0.00	500.00	143.00	500.00	500.00	0.00	0.00%
001.4030.5192.070	UNEMPLOYMENT-TEMPORAR	0.00	3,000.00	2,940.00	3,000.00	3,000.00	0.00	0.00%
001.4030.5215.000	BANK CHARGES	7,406.72	5,000.00	-2,790.86	7,000.00	5,000.00	-2,000.00	-28.57%
001.4030.5216.000	BACKGROUND CHECKS	0.00	150.00	0.00	150.00	150.00	0.00	0.00%
001.4030.5230.000	CONSULTING & PROF FEES	630.00	4,000.00	1,935.00	4,000.00	4,000.00	0.00	0.00%
001.4030.5251.000	LICENSE & PERMITS	1,058.00	500.00	376.50	500.00	500.00	0.00	0.00%
001.4030.5280.000	DUES, MEMBER, SUBSCRIPTN	815.00	500.00	180.00	500.00	500.00	0.00	0.00%
001.4030.5290.000	INSURANCE - GENERAL	14,664.19	15,971.00	0.00	15,476.00	18,571.00	3,095.00	20.00%
001.4030.5300.000	INSURANCE - TORT LIAB	5,521.89	5,592.00	0.00	6,631.00	7,957.00	1,326.00	20.00%
001.4030.5339.000	MEDICAL CLAIMS PAID BY CIT	313.20	200.00	237.76	200.00	200.00	0.00	0.00%
001.4030.5342.000	CONTRACT-OUTSIDE HELP	22,899.74	17,500.00	9,873.92	17,500.00	17,500.00	0.00	0.00%
001.4030.5344.000	CONTRACT-MAINTENANCE	2,125.46	1,900.00	1,651.32	1,900.00	1,900.00	0.00	0.00%
001.4030.5360.000	POSTAGE & SHIPPING	19.95	50.00	0.00	50.00	50.00	0.00	0.00%
001.4030.5370.000	PRINTING & BINDING	310.50	350.00	0.00	350.00	350.00	0.00	0.00%
001.4030.5380.000	RENTS & LEASES	1,725.00	1,000.00	2,269.00	2,500.00	1,000.00	-1,500.00	-60.00%

Budget Comparison Report

Account Number		2021-2022 Total Activity	2022-2023 Total Budget	2022-2023 YTD Activity Through Feb	Parent Budget 2022-2023 FY2023 Amend	Comparison 1 Budget 2023-2024 FY2024 Dept Request	Comparison 1 to Parent Budget Increase / (Decrease)	%
001.4030.5386.000	CONTRACT LAWN CARE	27,269.03	38,000.00	25,480.80	38,000.00	36,400.00	-1,600.00	-4.21%
001.4030.5410.000	REPAIRS & MAINTENANCE	5,461.15	5,000.00	1,832.88	3,500.00	4,000.00	500.00	14.29%
001.4030.5450.000	TELEPHONE/OTHR COMMNCT	533.01	400.00	587.28	500.00	500.00	0.00	0.00%
001.4030.5460.000	CONFERENCE EXPENSE	18.51	1,000.00	640.00	1,000.00	1,000.00	0.00	0.00%
001.4030.5463.000	TRAVEL-MOVING REIMBRSMT	819.04	0.00	0.00	0.00	0.00	0.00	0.00%
001.4030.5465.000	TRAVEL- HOTEL/MOTEL	800.30	350.00	0.00	350.00	350.00	0.00	0.00%
001.4030.5481.000	ELECTRICITY	17,254.59	13,000.00	11,643.35	20,000.00	20,000.00	0.00	0.00%
001.4030.5482.000	NATURAL GAS	2,969.90	2,600.00	2,170.40	3,000.00	3,000.00	0.00	0.00%
001.4030.5483.000	WATER	649.31	1,200.00	37.96	1,200.00	1,200.00	0.00	0.00%
001.4030.5485.000	STORM WATER FEES	6,230.31	6,065.00	6,118.51	6,120.00	6,120.00	0.00	0.00%
001.4030.5489.000	SAFETY EQUIP/SUPPLIES	959.10	500.00	201.44	500.00	500.00	0.00	0.00%
001.4030.5562.000	GROUNDS EQUIP MAINT SPLY	1,549.26	1,500.00	309.91	1,500.00	1,500.00	0.00	0.00%
001.4030.5565.000	VEHICLE OPER/MAINT SPPLY	8,506.84	7,500.00	9,644.71	10,000.00	10,000.00	0.00	0.00%
001.4030.5570.000	VEHICLE GAS	9,634.33	7,000.00	8,336.64	9,000.00	10,000.00	1,000.00	11.11%
001.4030.5571.000	VEHICLE DIESEL FUEL	4,419.14	5,000.00	4,925.49	5,000.00	5,000.00	0.00	0.00%
001.4030.5600.000	OPERATING SUPPLIES	14,966.55	6,500.00	4,295.17	5,500.00	5,500.00	0.00	0.00%
001.4030.5601.000	PROMOTION/PROGRAM SPPL\	1,200.00	0.00	0.00	0.00	0.00	0.00	0.00%
001.4030.5605.000	OFFICE SUPPLIES	31.89	0.00	49.99	0.00	0.00	0.00	0.00%
001.4030.5609.000	AGRICULTURAL SUPPLIES	2,878.83	1,300.00	14.99	1,300.00	1,300.00	0.00	0.00%
001.4030.5611.000	BLDG,GRD OPER/MAINT SPLY	10,629.63	11,000.00	4,094.12	10,000.00	11,000.00	1,000.00	10.00%
001.4030.5612.000	COMPUTER COMPONENTS	0.00	0.00	178.83	0.00	0.00	0.00	0.00%
001.4030.5702.000	MINOR OFFICE FURN/EQUIP	659.96	0.00	0.00	0.00	0.00	0.00	0.00%
001.4030.5718.000	MINOR EQUIP, UNCLASSFIED	2,050.14	3,000.00	5,206.51	3,000.00	3,000.00	0.00	0.00%
001.4030.5980.000	REFUNDS/REIMB	865.00	1,500.00	1,475.00	1,500.00	1,500.00	0.00	0.00%
	Total Expense:	**644,649.70**	**656,657.00**	**422,454.52**	**714,921.00**	**747,784.00**	**32,863.00**	**4.60%**
	Total Function: 4030 - Parks:	**-574,824.18**	**-594,957.00**	**-370,764.59**	**-645,721.00**	**-678,584.00**	**-32,863.00**	**5.09%**
Function: 4040 - Recreation								
Revenue								
001.4040.4470.000	GIFT CERTIFICATES	1,135.29	250.00	2,500.00	250.00	250.00	0.00	0.00%
001.4040.4472.000	PARK FEES & RENTALS	10.00	0.00	10.00	0.00	0.00	0.00	0.00%
001.4040.4473.000	RECREATION FEES	17,043.24	12,000.00	11,911.63	17,000.00	20,000.00	3,000.00	17.65%
001.4040.4875.000	P&R REFUNDS & REIMBURSMI	1,173.00	1,000.00	9.30	1,000.00	1,000.00	0.00	0.00%
	Total Revenue:	**19,361.53**	**13,250.00**	**14,430.93**	**18,250.00**	**21,250.00**	**3,000.00**	**16.44%**
Expense								
001.4040.5010.010	REGULAR-NON UNION	107,458.14	111,206.00	75,893.93	113,506.00	119,467.00	5,961.00	5.25%
001.4040.5030.070	PART-TIME TEMPORARY	0.00	2,000.00	0.00	0.00	0.00	0.00	0.00%
001.4040.5101.010	SOCIAL SECURITY-NON UNION	6,572.80	6,895.00	4,555.93	7,038.00	7,407.00	369.00	5.24%
001.4040.5101.070	SOCIAL SECURITY-PT TEMP	0.00	124.00	0.00	124.00	0.00	-124.00	-100.00%

Budget Comparison Report

Account Number		2021-2022 Total Activity	2022-2023 Total Budget	2022-2023 YTD Activity Through Feb	Parent Budget 2022-2023 FY2023 Amend	Comparison 1 Budget 2023-2024 FY2024 Dept Request	Comparison 1 to Parent Budget Increase / (Decrease)	%
001.4040.5102.010	MEDICARE-NON UNION	1,537.28	1,612.00	1,065.61	1,645.00	1,732.00	87.00	5.29%
001.4040.5102.070	MEDICARE-TEMPORARY	0.00	29.00	0.00	29.00	0.00	-29.00	-100.00%
001.4040.5111.010	IPERS-NON UNION	10,360.72	10,498.00	6,947.44	10,498.00	11,278.00	780.00	7.43%
001.4040.5121.010	GRP INSUR-NON UNION	14,214.74	15,675.00	10,238.52	16,481.00	17,478.00	997.00	6.05%
001.4040.5123.010	WORKCOMP-NON UNION	279.93	2,587.00	341.26	2,590.00	2,800.00	210.00	8.11%
001.4040.5123.070	WORKCOMP-TEMPORARY	0.00	58.00	0.00	58.00	0.00	-58.00	-100.00%
001.4040.5132.000	CLOTHING EXPENSE	475.97	200.00	0.00	200.00	200.00	0.00	0.00%
001.4040.5210.000	ADVERTISING & LEGAL PUB	133.30	300.00	28.28	300.00	300.00	0.00	0.00%
001.4040.5216.000	BACKGROUND CHECKS	45.00	50.00	85.00	50.00	50.00	0.00	0.00%
001.4040.5230.000	CONSULTING & PROF FEES	275.00	0.00	275.00	275.00	275.00	0.00	0.00%
001.4040.5280.000	DUES, MEMBER, SUBSCRIPTN	78.33	750.00	355.00	750.00	750.00	0.00	0.00%
001.4040.5342.000	CONTRACT-OUTSIDE HELP	0.00	0.00	1,755.00	1,755.00	0.00	-1,755.00	-100.00%
001.4040.5344.000	CONTRACT-MAINTENANCE	4,614.00	4,500.00	0.00	4,500.00	4,500.00	0.00	0.00%
001.4040.5358.000	RECR SRV-INSTRUCTR	10,707.50	9,000.00	4,745.00	9,000.00	9,000.00	0.00	0.00%
001.4040.5360.000	POSTAGE & SHIPPING	27.56	100.00	141.00	100.00	100.00	0.00	0.00%
001.4040.5370.000	PRINTING & BINDING	0.00	400.00	0.00	400.00	400.00	0.00	0.00%
001.4040.5380.000	RENTS & LEASES	0.00	500.00	0.00	500.00	500.00	0.00	0.00%
001.4040.5410.000	REPAIRS & MAINTENANCE	0.00	100.00	13.62	100.00	100.00	0.00	0.00%
001.4040.5441.000	SALES TAXES PAID/RECEIVED	-2,383.03	0.00	2,361.55	2,400.00	2,400.00	0.00	0.00%
001.4040.5442.000	LOST TAXES PAID/RECEIVED	-210.48	0.00	38.50	200.00	250.00	50.00	25.00%
001.4040.5443.000	WATER EXCISE TAX	626.60	0.00	-626.60	0.00	750.00	750.00	0.00%
001.4040.5450.000	TELEPHONE/OTHR COMMNCT	383.86	500.00	257.12	500.00	500.00	0.00	0.00%
001.4040.5460.000	CONFERENCE EXPENSE	0.00	1,250.00	240.00	1,250.00	1,250.00	0.00	0.00%
001.4040.5463.000	TRAVEL-MOVING REIMBRSMT	2,293.31	0.00	0.00	0.00	0.00	0.00	0.00%
001.4040.5600.000	OPERATING SUPPLIES	237.01	1,000.00	922.59	1,000.00	1,000.00	0.00	0.00%
001.4040.5601.000	PROMOTION/PROGRAM SPPL\	180.80	400.00	450.36	400.00	400.00	0.00	0.00%
001.4040.5605.000	OFFICE SUPPLIES	0.00	500.00	0.00	500.00	500.00	0.00	0.00%
001.4040.5613.000	MERCHANDISE FOR RESALE	1,168.50	2,000.00	0.00	2,000.00	2,000.00	0.00	0.00%
001.4040.5718.000	MINOR EQUIP, UNCLASSFIED	0.00	500.00	389.96	500.00	500.00	0.00	0.00%
001.4040.5980.000	REFUNDS/REIMB	886.00	750.00	658.00	750.00	750.00	0.00	0.00%
	Total Expense:	**159,962.84**	**173,484.00**	**111,132.07**	**179,399.00**	**186,637.00**	**7,238.00**	**4.03%**
	Total Function: 4040 - Recreation:	**-140,601.31**	**-160,234.00**	**-96,701.14**	**-161,149.00**	**-165,387.00**	**-4,238.00**	**2.63%**
Function: 4041 - Youth Recreation & Camps								
Revenue								
001.4041.4350.000	LOCAL/COUNTY - COMM SCH(	50,499.03	65,000.00	47,814.18	65,000.00	65,000.00	0.00	0.00%
001.4041.4479.000	YOUTH REC FEES	130,412.65	149,500.00	73,337.93	157,500.00	180,000.00	22,500.00	14.29%
001.4041.4875.000	RFNDS/REIMB	1,548.50	0.00	52.70	0.00	0.00	0.00	0.00%
	Total Revenue:	**182,460.18**	**214,500.00**	**121,204.81**	**222,500.00**	**245,000.00**	**22,500.00**	**10.11%**

Budget Comparison Report

Account Number		2021-2022 Total Activity	2022-2023 Total Budget	2022-2023 YTD Activity Through Feb	Parent Budget 2022-2023 FY2023 Amend	Comparison 1 Budget 2023-2024 FY2024 Dept Request	Comparison 1 to Parent Budget Increase / (Decrease)	%
Expense								
001.4041.5010.010	REGULAR-NON UNION	78,960.88	81,605.00	53,258.34	81,605.00	84,262.00	2,657.00	3.26%
001.4041.5030.070	PART-TIME TEMPORARY	62,213.09	92,000.00	57,936.90	75,000.00	75,000.00	0.00	0.00%
001.4041.5101.010	SOCIAL SECURITY-NON UNION	4,336.58	5,060.00	2,965.28	5,060.00	5,224.00	164.00	3.24%
001.4041.5101.070	SOCIAL SECURITY-PT TEMP	3,857.19	5,704.00	3,592.15	4,650.00	4,650.00	0.00	0.00%
001.4041.5102.010	MEDICARE-NON UNION	1,014.12	1,183.00	693.51	1,183.00	1,222.00	39.00	3.30%
001.4041.5102.070	MEDICARE-TEMPORARY	902.15	1,334.00	840.06	1,088.00	1,088.00	0.00	0.00%
001.4041.5111.010	IPERS-NON UNION	7,453.81	7,704.00	5,027.46	7,704.00	7,954.00	250.00	3.25%
001.4041.5111.070	IPERS-PT TEMP	772.41	0.00	0.00	0.00	0.00	0.00	0.00%
001.4041.5121.010	GRP INSUR-NON UNION	13,057.92	14,372.00	9,387.98	15,112.00	16,027.00	915.00	6.05%
001.4041.5123.010	WORKCOMP-NON UNION	1,104.08	2,049.00	1,339.09	2,051.00	2,113.00	62.00	3.02%
001.4041.5123.070	WORKCOMP-TEMPORARY	1,004.10	2,673.00	1,684.93	2,181.00	2,181.00	0.00	0.00%
001.4041.5132.000	CLOTHING EXPENSE	1,042.69	300.00	0.00	300.00	300.00	0.00	0.00%
001.4041.5151.000	PHYSICALS/IMMUNIZATIONS	0.00	200.00	0.00	200.00	200.00	0.00	0.00%
001.4041.5210.000	ADVERTISING & LEGAL PUB	133.30	500.00	129.08	500.00	500.00	0.00	0.00%
001.4041.5216.000	BACKGROUND CHECKS	950.70	500.00	368.00	500.00	500.00	0.00	0.00%
001.4041.5251.000	LICENSE & PERMITS	123.55	0.00	0.00	0.00	0.00	0.00	0.00%
001.4041.5280.000	DUES, MEMBER, SUBSCRIPTN	668.00	700.00	680.00	700.00	700.00	0.00	0.00%
001.4041.5331.000	PAYMENTS-OTHER ENTITIES	4,948.70	7,000.00	6,441.79	7,000.00	7,000.00	0.00	0.00%
001.4041.5342.000	CONTRACT-OUTSIDE HELP	1,216.85	600.00	1,230.46	2,500.00	600.00	-1,900.00	-76.00%
001.4041.5357.000	RECR SRV-ADMISSION	13,891.41	15,000.00	10,321.68	15,000.00	15,000.00	0.00	0.00%
001.4041.5358.000	RECR SRV-INSTRUCTR	2,970.00	2,000.00	1,620.00	2,000.00	2,000.00	0.00	0.00%
001.4041.5360.000	POSTAGE & SHIPPING	0.00	100.00	0.00	100.00	100.00	0.00	0.00%
001.4041.5370.000	PRINTING & BINDING	0.00	500.00	0.00	500.00	500.00	0.00	0.00%
001.4041.5380.000	RENTS & LEASES	2,912.50	2,500.00	2,150.50	2,500.00	2,500.00	0.00	0.00%
001.4041.5460.000	CONFERENCE EXPENSE	160.00	200.00	70.00	200.00	200.00	0.00	0.00%
001.4041.5600.000	OPERATING SUPPLIES	1,674.19	1,500.00	420.36	1,500.00	1,500.00	0.00	0.00%
001.4041.5601.000	PROMOTION/PROGRAM SPPL'	13,952.04	6,000.00	9,774.49	10,000.00	9,000.00	-1,000.00	-10.00%
001.4041.5613.000	MERCHANDISE FOR RESALE	1,377.10	3,000.00	9,854.60	7,900.00	5,000.00	-2,900.00	-36.71%
001.4041.5718.000	MINOR EQUIP, UNCLASSFIED	1,368.17	0.00	0.00	0.00	0.00	0.00	0.00%
001.4041.5980.000	REFUNDS/REIMB	200.00	200.00	260.00	200.00	200.00	0.00	0.00%
	Total Expense:	**222,265.53**	**254,484.00**	**180,046.66**	**247,234.00**	**245,521.00**	**-1,713.00**	**-0.69%**
	Total Function: 4041 - Youth Recreation & Camps:	**-39,805.35**	**-39,984.00**	**-58,841.85**	**-24,734.00**	**-521.00**	**24,213.00**	**-97.89%**
Function: 4045 - Swimming Pools								
Revenue								
001.4045.4474.002	AQUATIC CTR FEES, DAILY	62,076.35	80,000.00	24,304.44	80,000.00	80,000.00	0.00	0.00%
001.4045.4474.004	AQUATIC POOL PASS	12,907.90	29,000.00	193.21	29,000.00	29,000.00	0.00	0.00%
001.4045.4474.005	AQUATIC SCAN CARD	4,120.00	8,000.00	2,320.00	8,000.00	8,000.00	0.00	0.00%
001.4045.4474.006	AQUATIC SWIM TICKETS	2,753.73	4,000.00	378.52	4,000.00	4,000.00	0.00	0.00%

Budget Comparison Report

Account Number		2021-2022 Total Activity	2022-2023 Total Budget	2022-2023 YTD Activity Through Feb	Parent Budget 2022-2023 FY2023 Amend	Comparison 1 Budget 2023-2024 FY2024 Dept Request	Comparison 1 to Parent Budget Increase / (Decrease)	%
001.4045.4474.008	SWIMMING LESSON FEES	9,802.54	15,000.00	3,333.00	15,000.00	15,000.00	0.00	0.00%
001.4045.4474.009	AQUATIC POOL RENTALS	0.00	5,000.00	0.00	0.00	0.00	0.00	0.00%
001.4045.4875.000	RFNDS/REIMB: POOLS	20.66	100.00	55.00	100.00	100.00	0.00	0.00%
001.4045.4876.000	MISC REV: POOLS	1,690.73	0.00	1,300.00	0.00	0.00	0.00	0.00%
	Total Revenue:	**93,371.91**	**141,100.00**	**31,884.17**	**136,100.00**	**136,100.00**	**0.00**	**0.00%**
Expense								
001.4045.5010.090	REGULAR-P&R UNION	0.00	2,405.00	0.00	0.00	0.00	0.00	0.00%
001.4045.5030.070	PART-TIME TEMPORARY	78,302.03	163,635.00	39,178.11	110,000.00	110,000.00	0.00	0.00%
001.4045.5050.060	PART-TIME REGULAR	1,182.70	0.00	7,778.11	11,764.00	12,102.00	338.00	2.87%
001.4045.5101.060	SOCIAL SECURITY-PT REGULAR	73.34	0.00	482.32	730.00	750.00	20.00	2.74%
001.4045.5101.070	SOCIAL SECURITY-PT TEMP	4,855.13	10,145.00	2,429.17	6,820.00	6,820.00	0.00	0.00%
001.4045.5101.090	SOCIAL SECURITY-P&R UNION	0.00	149.11	0.00	0.00	0.00	0.00	0.00%
001.4045.5102.060	MEDICARE-PT REGULAR	17.16	0.00	112.77	171.00	175.00	4.00	2.34%
001.4045.5102.070	MEDICARE-TEMPORARY	1,135.61	2,373.00	568.16	1,595.00	1,595.00	0.00	0.00%
001.4045.5102.090	MEDICARE-P&R UNION	0.00	34.87	0.00	0.00	0.00	0.00	0.00%
001.4045.5111.060	IPERS-PT REGULAR	111.65	0.00	710.77	1,087.00	1,142.00	55.00	5.06%
001.4045.5111.070	IPERS-PT TEMP	629.21	0.00	0.00	0.00	0.00	0.00	0.00%
001.4045.5111.090	IPERS-P&R UNION	0.00	227.03	0.00	0.00	0.00	0.00	0.00%
001.4045.5121.090	GRP INSUR-P&R UNION	0.00	541.24	0.00	0.00	0.00	0.00	0.00%
001.4045.5123.060	WORKCOMP-PT REGULAR	19.08	0.00	218.96	335.00	300.00	-35.00	-10.45%
001.4045.5123.070	WORKCOMP-TEMPORARY	1,231.86	4,046.00	969.80	2,723.00	2,723.00	0.00	0.00%
001.4045.5123.090	WORKCOMP-P&R UNION	0.00	62.00	0.00	0.00	0.00	0.00	0.00%
001.4045.5132.000	CLOTHING EXPENSE	0.00	2,200.00	0.00	2,200.00	2,200.00	0.00	0.00%
001.4045.5151.000	PHYSICALS/IMMUNIZATIONS	127.00	0.00	0.00	0.00	0.00	0.00	0.00%
001.4045.5210.000	ADVERTISING & LEGAL PUB	0.00	500.00	0.00	500.00	500.00	0.00	0.00%
001.4045.5216.000	BACKGROUND CHECKS	405.35	600.00	0.00	600.00	600.00	0.00	0.00%
001.4045.5251.000	LICENSE & PERMITS	1,371.90	1,500.00	851.12	1,500.00	1,500.00	0.00	0.00%
001.4045.5280.000	DUES,MEMBER,SUBSCRIPTN	475.04	0.00	0.00	475.00	475.00	0.00	0.00%
001.4045.5290.000	INSURANCE - GENERAL	6,048.60	6,695.00	0.00	8,040.00	9,648.00	1,608.00	20.00%
001.4045.5300.000	INSURANCE - TORT LIAB	5,207.02	6,564.00	0.00	5,176.00	6,211.00	1,035.00	20.00%
001.4045.5331.000	PAYMENTS-OTHER ENTITIES	396.00	1,500.00	300.00	1,500.00	1,500.00	0.00	0.00%
001.4045.5342.000	CONTRACT-OUTSIDE HELP	2,814.25	1,200.00	1,431.63	3,000.00	3,000.00	0.00	0.00%
001.4045.5344.000	CONTRACT-MAINTENANCE	2,052.00	1,000.00	862.63	1,000.00	1,000.00	0.00	0.00%
001.4045.5380.000	RENTS & LEASES	560.00	600.00	56.26	600.00	600.00	0.00	0.00%
001.4045.5386.000	CONTRACT LAWN CARE	4,880.00	4,500.00	2,850.00	4,800.00	4,800.00	0.00	0.00%
001.4045.5410.000	REPAIRS & MAINTENANCE	1,372.07	5,000.00	684.75	5,000.00	5,000.00	0.00	0.00%
001.4045.5450.000	TELEPHONE/OTHR COMMNCT	1,095.69	1,300.00	720.78	1,300.00	1,300.00	0.00	0.00%
001.4045.5460.000	CONFERENCE EXPENSE	910.00	250.00	0.00	250.00	250.00	0.00	0.00%
001.4045.5470.000	TRAINING	545.00	300.00	0.00	300.00	300.00	0.00	0.00%

Budget Comparison Report

Account Number		2021-2022 Total Activity	2022-2023 Total Budget	2022-2023 YTD Activity Through Feb	Parent Budget 2022-2023 FY2023 Amend	Comparison 1 Budget 2023-2024 FY2024 Dept Request	Comparison 1 to Parent Budget Increase / (Decrease)	%
001.4045.5481.000	ELECTRICITY	24,754.51	28,500.00	22,301.59	28,500.00	28,500.00	0.00	0.00%
001.4045.5482.000	NATURAL GAS	9,309.08	10,000.00	2,912.92	10,000.00	10,000.00	0.00	0.00%
001.4045.5600.000	OPERATING SUPPLIES	5,051.30	6,000.00	1,533.38	6,000.00	6,000.00	0.00	0.00%
001.4045.5601.000	PROMOTION/PROGRAM SPPL\	0.00	0.00	60.15	100.00	0.00	-100.00	-100.00%
001.4045.5605.000	OFFICE SUPPLIES	0.00	100.00	0.00	100.00	100.00	0.00	0.00%
001.4045.5607.000	CHEMICAL SPPLY	17,366.10	12,000.00	5,851.37	12,000.00	12,000.00	0.00	0.00%
001.4045.5611.000	BLDG,GRD OPER/MAINT SPLY	2,109.86	3,000.00	994.62	3,000.00	3,000.00	0.00	0.00%
001.4045.5613.000	MERCHANDISE FOR RESALE	0.00	200.00	72.35	200.00	200.00	0.00	0.00%
001.4045.5704.000	MINOR SOFTWARE <$5,000	369.00	0.00	0.00	0.00	0.00	0.00	0.00%
001.4045.5718.000	MINOR EQUIP, UNCLASSFIED	1,297.44	3,000.00	998.89	3,000.00	3,000.00	0.00	0.00%
001.4045.5980.000	REFUNDS/REIMB	726.74	150.00	148.00	150.00	150.00	0.00	0.00%
001.4045.5990.000	CASH SHORT & (OVER)	1.00	0.00	1.00	0.00	0.00	0.00	0.00%
	Total Expense:	**176,802.72**	**280,277.25**	**95,079.61**	**234,516.00**	**237,441.00**	**2,925.00**	**1.25%**
	Total Function: 4045 - Swimming Pools:	**-83,430.81**	**-139,177.25**	**-63,195.44**	**-98,416.00**	**-101,341.00**	**-2,925.00**	**2.97%**
Function: 4060 - Community Center								
Expense								
001.4060.5331.000	PAYMENTS-OTHER ENTITIES	100,000.00	100,000.00	74,999.97	100,000.00	100,000.00	0.00	0.00%
	Total Expense:	**100,000.00**	**100,000.00**	**74,999.97**	**100,000.00**	**100,000.00**	**0.00**	**0.00%**
	Total Function: 4060 - Community Center:	**100,000.00**	**100,000.00**	**74,999.97**	**100,000.00**	**100,000.00**	**0.00**	**0.00%**
Function: 4065 - Coliseum								
Revenue								
001.4065.4472.000	FEES & RENTALS	19,437.76	20,000.00	16,006.02	20,000.00	20,000.00	0.00	0.00%
001.4065.4483.000	CONCESSIONS	10.00	0.00	0.00	0.00	0.00	0.00	0.00%
001.4065.4820.000	COLISEUM CONTRIBS	0.00	0.00	1,000.00	1,000.00	0.00	-1,000.00	-100.00%
001.4065.4875.000	RFNDS/REIMB: COLISEUM	213.91	200.00	0.00	0.00	200.00	200.00	0.00%
	Total Revenue:	**19,661.67**	**20,200.00**	**17,006.02**	**21,000.00**	**20,200.00**	**-800.00**	**-3.81%**
Expense								
001.4065.5010.010	REGULAR-NON UNION	0.00	0.00	2,488.58	200.00	6,653.00	6,453.00	3,226.50%
001.4065.5030.070	PART-TIME TEMPORARY	12,156.56	0.00	743.58	2,000.00	2,000.00	0.00	0.00%
001.4065.5050.060	PART-TIME REGULAR	3,802.69	34,530.00	11,061.34	27,613.00	28,621.00	1,008.00	3.65%
001.4065.5101.010	SOCIAL SECURITY-NON UNION	0.00	0.00	148.74	12.00	412.00	400.00	3,333.33%
001.4065.5101.060	SOCIAL SECURITY-PT REGULAR	239.42	2,141.00	685.72	1,712.00	1,774.00	62.00	3.62%
001.4065.5101.070	SOCIAL SECURITY-PT TEMP	753.74	0.00	46.09	124.00	124.00	0.00	0.00%
001.4065.5102.010	MEDICARE-NON UNION	0.00	0.00	34.79	3.00	96.00	93.00	3,100.00%
001.4065.5102.060	MEDICARE-PT REGULAR	56.00	501.00	160.36	401.00	415.00	14.00	3.49%
001.4065.5102.070	MEDICARE-TEMPORARY	176.27	0.00	10.80	29.00	29.00	0.00	0.00%
001.4065.5111.010	IPERS-NON UNION	0.00	0.00	216.08	0.00	628.00	628.00	0.00%
001.4065.5111.060	IPERS-PT REGULAR	270.94	3,260.00	1,020.54	2,583.00	2,702.00	119.00	4.61%

Account Number		2021-2022 Total Activity	2022-2023 Total Budget	2022-2023 YTD Activity Through Feb	Parent Budget 2022-2023 FY2023 Amend	Comparison 1 Budget 2023-2024 FY2024 Dept Request	Comparison 1 to Parent Budget Increase / (Decrease)	%
001.4065.5111.070	IPERS-PT TEMP	1,114.54	0.00	70.20	0.00	0.00	0.00	0.00%
001.4065.5121.010	GRP INSUR-NON UNION	0.00	0.00	507.72	0.00	1,451.00	1,451.00	0.00%
001.4065.5123.010	WORKCOMP-NON UNION	0.00	0.00	56.63	0.00	165.00	165.00	0.00%
001.4065.5123.060	WORKCOMP-PT REGULAR	57.23	1,003.00	300.23	796.00	708.00	-88.00	-11.06%
001.4065.5123.070	WORKCOMP-TEMPORARY	235.36	0.00	18.40	58.00	58.00	0.00	0.00%
001.4065.5151.000	PHYSICALS/IMMUNIZATIONS	317.00	0.00	0.00	0.00	0.00	0.00	0.00%
001.4065.5210.000	ADVERTISING & LEGAL PUB	200.00	1,000.00	0.00	1,000.00	1,000.00	0.00	0.00%
001.4065.5216.000	BACKGROUND CHECKS	0.00	200.00	0.00	200.00	200.00	0.00	0.00%
001.4065.5251.000	LICENSE & PERMITS	2,153.70	0.00	150.00	2,300.00	2,300.00	0.00	0.00%
001.4065.5290.000	INSURANCE - GENERAL	6,600.44	7,352.00	0.00	8,764.00	10,517.00	1,753.00	20.00%
001.4065.5300.000	INSURANCE - TORT LIAB	647.84	495.00	0.00	853.00	1,024.00	171.00	20.05%
001.4065.5342.000	CONTRACT-OUTSIDE HELP	1,270.83	1,200.00	487.78	1,200.00	1,200.00	0.00	0.00%
001.4065.5344.000	CONTRACT-MAINTENANCE	1,491.95	1,000.00	1,515.00	1,000.00	1,000.00	0.00	0.00%
001.4065.5380.000	RENTS & LEASES	420.00	300.00	0.00	300.00	300.00	0.00	0.00%
001.4065.5410.000	REPAIRS & MAINTENANCE	343.86	1,000.00	3,895.34	1,000.00	3,000.00	2,000.00	200.00%
001.4065.5450.000	TELEPHONE/OTHR COMMNCT	2,088.61	2,000.00	1,397.61	2,000.00	2,000.00	0.00	0.00%
001.4065.5481.000	ELECTRICITY	50,293.43	31,200.00	31,395.26	45,000.00	45,000.00	0.00	0.00%
001.4065.5482.000	NATURAL GAS	6,517.15	2,000.00	6,191.33	6,000.00	6,000.00	0.00	0.00%
001.4065.5483.000	WATER	496.34	1,800.00	416.74	1,800.00	1,800.00	0.00	0.00%
001.4065.5488.000	SEWER	301.54	0.00	158.16	300.00	300.00	0.00	0.00%
001.4065.5600.000	OPERATING SUPPLIES	3,183.59	2,000.00	884.48	2,000.00	2,000.00	0.00	0.00%
001.4065.5611.000	BLDG,GRD OPER/MAINT SPLY	2,048.82	1,000.00	1,802.70	2,000.00	3,000.00	1,000.00	50.00%
001.4065.5718.000	MINOR EQUIP, UNCLASSFIED	1,448.31	1,800.00	123.18	1,800.00	1,800.00	0.00	0.00%
001.4065.5980.000	REFUNDS/REIMB	0.00	500.00	0.00	500.00	500.00	0.00	0.00%
	Total Expense:	**98,686.16**	**96,282.00**	**65,987.38**	**113,548.00**	**128,777.00**	**15,229.00**	**13.41%**
	Total Function: 4065 - Coliseum:	**-79,024.49**	**-76,082.00**	**-48,981.36**	**-92,548.00**	**-108,577.00**	**-16,029.00**	**17.32%**
Function: 4066 - Coliseum Concessions								
Revenue								
001.4066.4483.000	CONCESSIONS	12,600.25	14,000.00	17,943.15	16,000.00	16,000.00	0.00	0.00%
	Total Revenue:	**12,600.25**	**14,000.00**	**17,943.15**	**16,000.00**	**16,000.00**	**0.00**	**0.00%**
Expense								
001.4066.5030.070	PART-TIME TEMPORARY	0.00	1,500.00	661.50	1,500.00	1,500.00	0.00	0.00%
001.4066.5101.070	SOCIAL SECURITY-PT TEMP	0.00	93.00	41.01	93.00	93.00	0.00	0.00%
001.4066.5102.070	MEDICARE-TEMPORARY	0.00	22.00	9.60	22.00	22.00	0.00	0.00%
001.4066.5111.070	IPERS-PT TEMP	0.00	0.00	0.00	0.00	0.00	0.00	0.00%
001.4066.5123.070	WORKCOMP-TEMPORARY	0.00	44.00	16.38	44.00	44.00	0.00	0.00%
001.4066.5251.000	LICENSE & PERMITS	411.50	0.00	0.00	0.00	0.00	0.00	0.00%
001.4066.5280.000	DUES, MEMBER, SUBSCRIPTN	0.00	0.00	50.00	0.00	0.00	0.00	0.00%

Account Number		2021-2022 Total Activity	2022-2023 Total Budget	2022-2023 YTD Activity Through Feb	Parent Budget 2022-2023 FY2023 Amend	Comparison 1 Budget 2023-2024 FY2024 Dept Request	Comparison 1 to Parent Budget Increase / (Decrease)	%
001.4066.5290.000	INSURANCE - GENERAL	500.00	627.00	0.00	600.00	720.00	120.00	20.00%
001.4066.5300.000	INSURANCE - TORT LIAB	0.00	0.00	0.00	49.00	59.00	10.00	20.41%
001.4066.5600.000	OPERATING SUPPLIES	481.45	500.00	486.03	500.00	500.00	0.00	0.00%
001.4066.5611.000	BLDG.GRD OPER/MAINT SPLY	0.00	0.00	301.83	0.00	0.00	0.00	0.00%
001.4066.5613.000	MERCHANDISE FOR RESALE	11,331.69	11,000.00	9,884.36	11,000.00	11,000.00	0.00	0.00%
001.4066.5703.000	MINOR COMPUTER	1,218.28	0.00	0.00	0.00	0.00	0.00	0.00%
001.4066.5718.000	MINOR EQUIP, UNCLASSFIED	1,102.93	1,000.00	0.00	1,000.00	1,000.00	0.00	0.00%
	Total Expense:	**15,045.85**	**14,786.00**	**11,450.71**	**14,808.00**	**14,938.00**	**130.00**	**0.88%**
	Total Function: 4066 - Coliseum Concessions:	**-2,445.60**	**-786.00**	**6,492.44**	**1,192.00**	**1,062.00**	**-130.00**	**-10.91%**
Function: 5010 - Community Beautification								
Expense								
001.5010.5010.010	REGULAR-NON UNION	5,224.79	5,387.00	3,639.86	5,437.00	5,870.00	433.00	7.96%
001.5010.5101.010	SOCIAL SECURITY-NON UNION	326.87	334.00	220.65	337.00	364.00	27.00	8.01%
001.5010.5102.010	MEDICARE-NON UNION	76.32	78.00	51.54	79.00	85.00	6.00	7.59%
001.5010.5111.010	IPERS-NON UNION	508.50	508.00	338.76	508.00	554.00	46.00	9.06%
001.5010.5121.010	GRP INSUR-NON UNION	696.55	769.00	502.12	808.00	857.00	49.00	6.06%
001.5010.5123.010	WORKCOMP-NON UNION	4.86	156.00	5.82	157.00	171.00	14.00	8.92%
001.5010.5300.000	INSURANCE - TORT LIAB	86.15	161.00	0.00	73.00	88.00	15.00	20.55%
001.5010.5342.000	CONTRACT-OUTSIDE HELP	1,800.00	4,000.00	1,551.42	2,400.00	4,800.00	2,400.00	100.00%
001.5010.5410.000	REPAIRS & MAINTENANCE	0.00	4,000.00	100.00	4,000.00	4,000.00	0.00	0.00%
001.5010.5463.000	TRAVEL-MOVING REIMBRSMT	163.80	0.00	0.00	0.00	0.00	0.00	0.00%
001.5010.5562.000	GROUNDS EQUIP MAINT SPLY	0.00	4,000.00	0.00	4,000.00	4,000.00	0.00	0.00%
001.5010.5600.000	OPERATING SUPPLIES	0.00	3,200.00	176.68	585.00	3,200.00	2,615.00	447.01%
001.5010.5602.000	SUPPLIES - BANNERS	91.64	0.00	2,873.85	2,615.00	0.00	-2,615.00	-100.00%
	Total Expense:	**8,979.48**	**22,593.00**	**9,460.70**	**20,999.00**	**23,989.00**	**2,990.00**	**14.24%**
	Total Function: 5010 - Community Beautification:	**8,979.48**	**22,593.00**	**9,460.70**	**20,999.00**	**23,989.00**	**2,990.00**	**14.24%**
Function: 5020 - Economic Development								
Expense								
001.5020.5230.000	CONSULTING & PROF FEES	3,387.00	0.00	270.00	270.00	0.00	-270.00	-100.00%
001.5020.5234.000	LEGAL EXPENSES	15,331.50	0.00	0.00	0.00	0.00	0.00	0.00%
001.5020.5300.000	INSURANCE - TORT LIAB	2,158.02	1,741.00	0.00	1,835.00	2,202.00	367.00	20.00%
001.5020.5331.000	PAYMENTS-OTHER ENTITIES	85,000.00	90,000.00	65,000.00	90,000.00	50,000.00	-40,000.00	-44.44%
001.5020.5342.000	CONTRACT-OUTSIDE HELP	0.00	0.00	205.38	205.00	0.00	-205.00	-100.00%
001.5020.5410.000	REPAIRS & MAINTENANCE	39,901.60	50,000.00	36,249.66	233,952.00	50,000.00	-183,952.00	-78.63%
001.5020.5440.000	TAXES PAID	0.00	0.00	19.00	19.00	0.00	-19.00	-100.00%
	Total Expense:	**145,778.12**	**141,741.00**	**101,744.04**	**326,281.00**	**102,202.00**	**-224,079.00**	**-68.68%**
	Total Function: 5020 - Economic Development:	**145,778.12**	**141,741.00**	**101,744.04**	**326,281.00**	**102,202.00**	**-224,079.00**	**-68.68%**

Budget Comparison Report

Account Number		2021-2022 Total Activity	2022-2023 Total Budget	2022-2023 YTD Activity Through Feb	Parent Budget 2022-2023 FY2023 Amend	Comparison 1 Budget 2023-2024 FY2024 Dept Request	Comparison 1 to Parent Budget Increase / (Decrease)	%
Function: 5040 - Planning & Zoning								
Revenue								
001.5040.4231.000	ZONING LIC/PERMITS	6,919.99	6,000.00	4,333.30	6,000.00	6,000.00	0.00	0.00%
001.5040.4875.000	RFNDS/REIMB	0.00	0.00	0.00	0.00	0.00	0.00	0.00%
	Total Revenue:	**6,919.99**	**6,000.00**	**4,333.30**	**6,000.00**	**6,000.00**	**0.00**	**0.00%**
Expense								
001.5040.5010.010	REGULAR-NON UNION	128,727.36	140,502.00	92,230.57	151,164.00	125,464.00	-25,700.00	-17.00%
001.5040.5060.010	TERM PAYOUTS-NON UNION	2,847.45	0.00	0.00	0.00	0.00	0.00	0.00%
001.5040.5101.010	SOCIAL SECURITY-NON UNION	7,782.22	8,711.00	5,618.23	9,372.00	7,779.00	-1,593.00	-17.00%
001.5040.5102.010	MEDICARE-NON UNION	1,820.16	2,037.00	1,313.91	2,192.00	1,819.00	-373.00	-17.02%
001.5040.5111.010	IPERS-NON UNION	12,151.65	13,263.00	8,612.07	14,175.00	11,844.00	-2,331.00	-16.44%
001.5040.5121.010	GRP INSUR-NON UNION	17,964.81	22,296.00	6,720.34	27,487.00	11,147.00	-16,340.00	-59.45%
001.5040.5123.010	WORKCOMP-NON UNION	467.77	2,752.00	822.09	2,944.00	1,060.00	-1,884.00	-63.99%
001.5040.5151.000	PHYSICALS/IMMUNIZATIONS	0.00	0.00	179.00	179.00	0.00	-179.00	-100.00%
001.5040.5210.000	ADVERTISING & LEGAL PUB	96.92	600.00	0.00	300.00	300.00	0.00	0.00%
001.5040.5216.000	BACKROUND CHECKS	0.00	0.00	15.00	15.00	0.00	-15.00	-100.00%
001.5040.5230.000	CONSULTING & PROF FEES	7,607.50	5,000.00	900.00	500.00	0.00	-500.00	-100.00%
001.5040.5250.000	COURT, RECORD & FILING FEE	0.00	100.00	0.00	100.00	100.00	0.00	0.00%
001.5040.5280.000	DUES, MEMBER, SUBSCRIPTN	14,268.50	17,500.00	13,894.50	17,500.00	17,500.00	0.00	0.00%
001.5040.5300.000	INSURANCE - TORT LIAB	900.57	801.00	0.00	859.00	1,031.00	172.00	20.02%
001.5040.5347.000	CONTRACT-SOFTWARE MAINT	399.90	400.00	1,550.00	400.00	400.00	0.00	0.00%
001.5040.5360.000	POSTAGE & SHIPPING	55.00	200.00	0.00	200.00	200.00	0.00	0.00%
001.5040.5460.000	CONFERENCE EXPENSE	1,095.00	800.00	825.00	800.00	800.00	0.00	0.00%
001.5040.5600.000	OPERATING SUPPLIES	230.91	200.00	85.10	200.00	200.00	0.00	0.00%
001.5040.5605.000	OFFICE SUPPLIES	19.43	100.00	33.88	100.00	100.00	0.00	0.00%
	Total Expense:	**196,435.15**	**215,262.00**	**132,799.69**	**228,487.00**	**179,744.00**	**-48,743.00**	**-21.33%**
	Total Function: 5040 - Planning & Zoning:	**-189,515.16**	**-209,262.00**	**-128,466.39**	**-222,487.00**	**-173,744.00**	**48,743.00**	**-21.91%**
Function: 5900 - Other Community and Economic Dev.								
Revenue								
001.5900.4620.000	RENTS	1,800.00	2,000.00	1,500.00	2,000.00	2,000.00	0.00	0.00%
001.5900.4960.000	SALE OF F.A.	0.00	0.00	74,615.00	74,615.00	0.00	-74,615.00	-100.00%
	Total Revenue:	**1,800.00**	**2,000.00**	**76,115.00**	**76,615.00**	**2,000.00**	**-74,615.00**	**-97.39%**
Expense								
001.5900.5331.000	PAYMENTS-OTHER ENTITIES	325,989.77	268,800.00	207,495.92	336,000.00	336,000.00	0.00	0.00%
001.5900.5565.000	VEHICLE OPER/MAINT SUPPLY	103.94	0.00	1,065.00	1,065.00	0.00	-1,065.00	-100.00%

Account Number		2021-2022 Total Activity	2022-2023 Total Budget	2022-2023 YTD Activity Through Feb	Parent Budget 2022-2023 FY2023 Amend	Comparison 1 Budget 2023-2024 FY2024 Dept Request	Comparison 1 to Parent Budget Increase / (Decrease)	%
001.5900.5781.000	LAND ACQUISITION	74,000.00	0.00	600.00	600.00	0.00	-600.00	-100.00%
	Total Expense:	**400,093.71**	**268,800.00**	**209,160.92**	**337,665.00**	**336,000.00**	**-1,665.00**	**-0.49%**
Total Function: 5900 - Other Community and Economic Dev.:		**-398,293.71**	**-266,800.00**	**-133,045.92**	**-261,050.00**	**-334,000.00**	**-72,950.00**	**27.94%**
Function: 6010 - Mayor								
Expense								
001.6010.5030.070	PART-TIME TEMPORARY	9,257.60	11,000.00	7,191.20	11,000.00	11,000.00	0.00	0.00%
001.6010.5102.070	MEDICARE-TEMPORARY	134.33	160.00	104.33	160.00	160.00	0.00	0.00%
001.6010.5111.070	IPERS-PT TEMP	873.95	1,038.00	678.85	1,038.00	1,038.00	0.00	0.00%
001.6010.5123.070	WORKCOMP-TEMPORARY	8.33	18.00	11.73	18.00	18.00	0.00	0.00%
001.6010.5210.000	ADVERTISING & LEGAL PUB	0.00	0.00	5.29	20.00	0.00	-20.00	-100.00%
001.6010.5280.000	DUES, MEMBER, SUBSCRIPTN	30.00	500.00	0.00	500.00	500.00	0.00	0.00%
001.6010.5300.000	INSURANCE - TORT LIAB	106.95	186.00	0.00	118.00	142.00	24.00	20.34%
001.6010.5450.000	TELEPHONE/OTHR COMMNCT	383.86	400.00	257.12	400.00	400.00	0.00	0.00%
001.6010.5460.000	CONFERENCE EXPENSE	70.00	1,000.00	25.00	500.00	1,000.00	500.00	100.00%
001.6010.5600.000	OPERATING SUPPLIES	58.64	250.00	30.99	250.00	250.00	0.00	0.00%
	Total Expense:	**10,923.66**	**14,552.00**	**8,304.51**	**14,004.00**	**14,508.00**	**504.00**	**3.60%**
	Total Function: 6010 - Mayor:	**10,923.66**	**14,552.00**	**8,304.51**	**14,004.00**	**14,508.00**	**504.00**	**3.60%**
Function: 6011 - Council								
Expense								
001.6011.5030.070	PART-TIME TEMPORARY	29,720.80	38,500.00	25,194.40	38,500.00	38,500.00	0.00	0.00%
001.6011.5101.070	SOCIAL SECURITY-PT TEMP	725.13	682.00	669.24	1,044.00	1,044.00	0.00	0.00%
001.6011.5102.070	MEDICARE-TEMPORARY	430.49	558.00	365.05	558.00	558.00	0.00	0.00%
001.6011.5111.070	IPERS-PT TEMP	1,603.34	2,596.00	1,359.24	2,596.00	2,596.00	0.00	0.00%
001.6011.5123.070	WORKCOMP-TEMPORARY	26.39	63.00	41.72	63.00	63.00	0.00	0.00%
001.6011.5230.000	CONSULTING & PROF FEES	1,345.00	1,500.00	2,350.00	2,350.00	2,350.00	0.00	0.00%
001.6011.5300.000	INSURANCE - TORT LIAB	591.15	1,085.00	0.00	670.00	804.00	134.00	20.00%
001.6011.5331.000	PAYMENTS - OTHER ENTITIES	140.00	500.00	84.00	250.00	250.00	0.00	0.00%
001.6011.5344.000	CONTRACT-MAINTENANCE	37.45	0.00	0.00	0.00	0.00	0.00	0.00%
001.6011.5460.000	CONFERENCE EXPENSE	240.00	1,750.00	25.00	1,000.00	1,750.00	750.00	75.00%
001.6011.5600.000	OPERATING SUPPLIES	470.34	200.00	117.13	200.00	200.00	0.00	0.00%
001.6011.5605.000	OFFICE SUPPLIES	53.99	0.00	0.00	0.00	0.00	0.00	0.00%
	Total Expense:	**35,384.08**	**47,434.00**	**30,205.78**	**47,231.00**	**48,115.00**	**884.00**	**1.87%**
	Total Function: 6011 - Council:	**35,384.08**	**47,434.00**	**30,205.78**	**47,231.00**	**48,115.00**	**884.00**	**1.87%**
Function: 6012 - City Administrator/Manager								
Revenue								
001.6012.4492.000	CITY ADM MISC CHRGS	0.00	1.00	0.00	0.00	0.00	0.00	0.00%

Budget Comparison Report

Account Number		2021-2022 Total Activity	2022-2023 Total Budget	2022-2023 YTD Activity Through Feb	Parent Budget 2022-2023 FY2023 Amend	Comparison 1 Budget 2023-2024 FY2024 Dept Request	Comparison 1 to Parent Budget Increase / (Decrease)	%
001.6012.4875.000	REFND/REIMB: C.A.	0.00	0.00	910.00	910.00	0.00	-910.00	-100.00%
	Total Revenue:	**0.00**	**1.00**	**910.00**	**910.00**	**0.00**	**-910.00**	**-100.00%**
Expense								
001.6012.5010.010	REGULAR-NON UNION	130,995.49	140,343.00	90,228.11	136,902.00	140,327.00	3,425.00	2.50%
001.6012.5057.010	CAR REIMB-NON UNION	2,925.00	2,700.00	1,575.00	2,700.00	2,700.00	0.00	0.00%
001.6012.5101.010	SOCIAL SECURITY-NON UNION	6,597.54	7,003.00	3,792.12	6,743.00	7,574.00	831.00	12.32%
001.6012.5102.010	MEDICARE-NON UNION	1,923.81	2,074.00	1,319.23	2,024.00	2,074.00	50.00	2.47%
001.6012.5111.010	IPERS-NON UNION	12,373.88	13,503.00	8,448.36	13,108.00	13,502.00	394.00	3.01%
001.6012.5121.010	GRP INSUR-NON UNION	4,301.96	4,885.00	3,137.35	5,132.00	5,440.00	308.00	6.00%
001.6012.5123.010	WORKCOMP-NON UNION	119.33	229.00	148.85	222.00	229.00	7.00	3.15%
001.6012.5230.000	CONSULTING & PROF FEES	4,720.00	500.00	375.00	500.00	500.00	0.00	0.00%
001.6012.5280.000	DUES, MEMBER, SUBSCRIPTN	2,107.04	1,750.00	1,700.00	1,750.00	1,750.00	0.00	0.00%
001.6012.5300.000	INSURANCE - TORT LIAB	773.06	763.00	0.00	715.00	858.00	143.00	20.00%
001.6012.5331.000	PAYMENTS-OTHER ENTITIES	28.00	0.00	0.00	0.00	0.00	0.00	0.00%
001.6012.5450.000	TELEPHONE/OTHR COMMNCT	863.86	900.00	737.12	900.00	900.00	0.00	0.00%
001.6012.5460.000	CONFERENCE EXPENSE	790.00	1,000.00	1,533.00	1,750.00	1,000.00	-750.00	-42.86%
001.6012.5465.000	TRAVEL - HOTEL/MOTEL	643.56	1,000.00	0.00	500.00	1,000.00	500.00	100.00%
001.6012.5600.000	OPERATING SUPPLIES	0.00	250.00	0.00	250.00	250.00	0.00	0.00%
001.6012.5605.000	OFFICE SUPPLIES	7.99	250.00	0.00	250.00	250.00	0.00	0.00%
001.6012.5703.000	MINOR COMPUTER	29.98	0.00	0.00	0.00	0.00	0.00	0.00%
	Total Expense:	**169,200.50**	**177,150.00**	**112,994.14**	**173,446.00**	**178,354.00**	**4,908.00**	**2.83%**
Total Function: 6012 - City Administrator/Manager:		**-169,200.50**	**-177,149.00**	**-112,084.14**	**-172,536.00**	**-178,354.00**	**-5,818.00**	**3.37%**
Function: 6020 - Clerk								
Revenue								
001.6020.4212.000	LIQUOR LICENSES	55,986.26	32,000.00	19,530.32	32,000.00	32,000.00	0.00	0.00%
001.6020.4220.000	CIGARETTE PERMITS	3,450.00	3,100.00	0.00	3,100.00	3,100.00	0.00	0.00%
001.6020.4230.000	MISC BUSNESS LIC/PRMTS	3,642.00	1,600.00	3,620.00	3,800.00	3,800.00	0.00	0.00%
001.6020.4492.000	CITY CLERK MISC CHRGS	4,887.10	5,000.00	1,876.37	5,000.00	5,000.00	0.00	0.00%
001.6020.4616.000	INT CHRGD - ACCTS REC	2,439.29	3,000.00	789.13	3,000.00	3,000.00	0.00	0.00%
001.6020.4875.000	REFND/REIMB: CLERK	412.00	500.00	500.00	500.00	0.00	-500.00	-100.00%
	Total Revenue:	**70,816.65**	**45,200.00**	**26,315.82**	**47,400.00**	**46,900.00**	**-500.00**	**-1.05%**
Expense								
001.6020.5010.010	REGULAR-NON UNION	69,512.44	73,836.00	48,458.61	74,836.00	76,557.00	1,721.00	2.30%
001.6020.5101.010	SOCIAL SECURITY-NON UNION	3,992.79	4,578.00	2,775.62	4,640.00	4,747.00	107.00	2.31%
001.6020.5102.010	MEDICARE-NON UNION	933.72	1,071.00	649.16	1,086.00	1,110.00	24.00	2.21%
001.6020.5111.010	IPERS-NON UNION	6,561.93	6,970.00	4,480.05	6,970.00	7,227.00	257.00	3.69%
001.6020.5121.010	GRP INSUR-NON UNION	13,970.04	15,376.00	10,044.04	16,169.00	17,149.00	980.00	6.06%
001.6020.5122.000	RETIREES GRP HLTH INS	6,961.44	7,662.00	5,003.22	7,786.00	8,949.00	1,163.00	14.94%

Budget Comparison Report

Account Number		2021-2022 Total Activity	2022-2023 Total Budget	2022-2023 YTD Activity Through Feb	Parent Budget 2022-2023 FY2023 Amend	Comparison 1 Budget 2023-2024 FY2024 Dept Request	Comparison 1 to Parent Budget Increase / (Decrease)	%
001.6020.5123.010	WORKCOMP-NON UNION	61.85	121.00	77.57	121.00	125.00	4.00	3.31%
001.6020.5210.000	ADVERTISING & LEGAL PUB	8,489.51	8,500.00	5,763.02	8,750.00	8,750.00	0.00	0.00%
001.6020.5230.000	CONSULTING & PROF FEES	1,649.00	2,500.00	9,343.28	11,850.00	2,500.00	-9,350.00	-78.90%
001.6020.5250.000	COURT, RECORD & FILING FEE	1,216.20	900.00	1,275.00	1,500.00	1,500.00	0.00	0.00%
001.6020.5280.000	DUES, MEMBER, SUBSCRIPTN	670.00	11,200.00	10,645.00	11,200.00	11,200.00	0.00	0.00%
001.6020.5300.000	INSURANCE - TORT LIAB	654.85	756.00	0.00	560.00	672.00	112.00	20.00%
001.6020.5344.000	CONTRACT-MAINTENANCE	1,613.83	2,000.00	486.88	2,000.00	2,000.00	0.00	0.00%
001.6020.5347.000	CONTRACT-SOFTWARE MAINT	450.00	450.00	450.00	450.00	450.00	0.00	0.00%
001.6020.5360.000	POSTAGE & SHIPPING	5,940.85	7,000.00	-55.00	500.00	3,000.00	2,500.00	500.00%
001.6020.5410.000	REPAIRS & MAINTENANCE	0.00	100.00	0.00	100.00	100.00	0.00	0.00%
001.6020.5450.000	TELEPHONE/OTHR COMMNCT	383.86	400.00	257.12	400.00	400.00	0.00	0.00%
001.6020.5460.000	CONFERENCE EXPENSE	1,104.00	624.00	80.00	500.00	500.00	0.00	0.00%
001.6020.5464.000	TRAVEL-PER DIEM	8.00	24.00	20.00	20.00	40.00	20.00	100.00%
001.6020.5472.000	MILEAGE REIMBURSE	122.62	0.00	19.50	75.00	150.00	75.00	100.00%
001.6020.5600.000	OPERATING SUPPLIES	71.89	0.00	0.00	0.00	0.00	0.00	0.00%
001.6020.5605.000	OFFICE SUPPLIES	169.41	800.00	407.07	800.00	800.00	0.00	0.00%
001.6020.5980.000	REFUNDS/REIMB	21.00	0.00	7.00	7.00	0.00	-7.00	-100.00%
	Total Expense:	**124,559.23**	**144,868.00**	**100,187.14**	**150,320.00**	**147,926.00**	**-2,394.00**	**-1.59%**
	Total Function: 6020 - Clerk:	**-53,742.58**	**-99,668.00**	**-73,871.32**	**-102,920.00**	**-101,026.00**	**1,894.00**	**-1.84%**
Function: 6021 - Finance								
Revenue								
001.6021.4010.000	PROPERTY TAXES-CURRENT	6,107,662.04	6,839,933.00	3,645,148.23	6,839,933.00	6,706,145.00	-133,788.00	-1.96%
001.6021.4011.000	DELIQUENT PROPERTY TAXES	24,762.52	0.00	4,741.47	0.00	0.00	0.00	0.00%
001.6021.4012.000	PROP TAXES - BAND	9,123.79	10,032.00	5,347.86	10,032.00	8,023.00	-2,009.00	-20.03%
001.6021.4016.000	PROP TAXES,FISHER CM CTR	82,963.87	91,191.00	48,612.09	91,191.00	89,092.00	-2,099.00	-2.30%
001.6021.4018.000	PROP TAXES, TRANSIT	125,838.09	227,981.00	120,740.52	227,981.00	245,014.00	17,033.00	7.47%
001.6021.4020.000	PROP TAX CURR EMERGENCY I	27,087.47	30,982.00	16,505.95	30,982.00	32,372.00	1,390.00	4.49%
001.6021.4021.000	DELINQ EMERGENCY MGNT	98.62	0.00	18.96	0.00	0.00	0.00	0.00%
001.6021.4030.000	PROPERTY TAX CURR AG LAND	16,698.27	17,017.00	10,278.77	17,017.00	17,395.00	378.00	2.22%
001.6021.4031.000	DELINQ AG LAND TAXES	0.00	0.00	0.36	0.00	0.00	0.00	0.00%
001.6021.4070.000	PROP TAX CURR TORT LIAB INS	178,187.06	268,075.00	142,283.02	268,075.00	331,391.00	63,316.00	23.62%
001.6021.4110.000	UTILITY EXCISE TAX	790,982.67	721,171.00	388,626.90	721,171.00	907,171.00	186,000.00	25.79%
001.6021.4120.000	UTILITY FRANCHISE FEES	189,316.13	190,000.00	139,133.77	190,000.00	190,000.00	0.00	0.00%
001.6021.4140.000	HOTEL/MOTEL TAXES	486,551.89	480,000.00	475,887.36	600,000.00	600,000.00	0.00	0.00%
001.6021.4150.000	CURRENT MOBILE HOME TAXE	6,601.64	7,240.00	4,655.93	7,240.00	7,240.00	0.00	0.00%
001.6021.4151.000	DELIQ MOBILE HOME TAXES	397.83	0.00	524.46	800.00	0.00	-800.00	-100.00%
001.6021.4268.000	URBAN REVIT. PERMITS	2,250.00	1,000.00	6,700.00	6,100.00	4,000.00	-2,100.00	-34.43%
001.6021.4331.000	AG LAND CREDIT	125.59	0.00	961.16	0.00	0.00	0.00	0.00%
001.6021.4332.000	AGED INCOME CREDIT	7,436.37	0.00	6,507.98	0.00	0.00	0.00	0.00%

Budget Comparison Report

Account Number		2021-2022 Total Activity	2022-2023 Total Budget	2022-2023 YTD Activity Through Feb	Parent Budget 2022-2023 FY2023 Amend	Comparison 1 Budget 2023-2024 FY2024 Dept Request	Comparison 1 to Parent Budget Increase / (Decrease)	%
001.6021.4333.000	DISABLED HOMESTEAD CREDI	22,635.48	0.00	10,891.12	0.00	0.00	0.00	0.00%
001.6021.4334.000	FAMILY FARM CREDIT	0.00	0.00	139.33	0.00	0.00	0.00	0.00%
001.6021.4335.000	HOMESTEAD CREDIT	238,116.54	0.00	119,978.01	0.00	0.00	0.00	0.00%
001.6021.4336.000	MILITARY CREDIT	2,785.15	0.00	2,587.35	0.00	0.00	0.00	0.00%
001.6021.4337.000	MOBILE HOME CREDIT	0.00	0.00	15.64	0.00	0.00	0.00	0.00%
001.6021.4338.000	BUSINESS PROP TAX CREDIT	223,912.74	0.00	118,912.50	0.00	234,935.00	234,935.00	0.00%
001.6021.4339.000	SF295 BACKFILL	214,239.35	193,048.00	96,610.73	193,048.00	165,536.00	-27,512.00	-14.25%
001.6021.4361.000	MONEYS AND CREDITS ON CRI	14,179.32	14,180.00	16,721.94	16,722.00	14,180.00	-2,542.00	-15.20%
001.6021.4490.000	ACCOUNTING SERVICES	110,008.00	137,308.00	91,774.80	137,674.00	142,935.00	5,261.00	3.82%
001.6021.4492.000	FINANCE MISC CHARGES	6,092.79	2,000.00	1,793.19	2,000.00	2,000.00	0.00	0.00%
001.6021.4540.000	PENALTIES/DELIQUENT	2,427.00	2,000.00	860.00	2,000.00	2,000.00	0.00	0.00%
001.6021.4610.000	INTEREST ON INVESTMENTS	118,868.09	114,000.00	72,571.93	119,000.00	119,001.00	1.00	0.00%
001.6021.4616.000	INT CHRGD - ACCTS REC	3,505.75	3,003.00	0.00	3,003.00	3,003.00	0.00	0.00%
001.6021.4999.000	CREDIT MEMO HOLDING	-1,054.14	0.00	-8,543.36	0.00	0.00	0.00	0.00%
	Total Revenue:	**9,011,799.92**	**9,350,161.00**	**5,540,987.97**	**9,483,969.00**	**9,821,433.00**	**337,464.00**	**3.56%**
Expense								
001.6021.5010.010	REGULAR-NON UNION	351,679.96	368,812.00	243,022.29	371,812.00	383,865.00	12,053.00	3.24%
001.6021.5020.010	OVERTIME-NON UNION	0.00	3,000.00	0.00	3,000.00	3,000.00	0.00	0.00%
001.6021.5101.010	SOCIAL SECURITY-NON UNION	20,043.08	22,866.00	13,919.07	23,052.00	23,800.00	748.00	3.24%
001.6021.5102.010	MEDICARE-NON UNION	4,687.43	5,348.00	3,255.34	5,392.00	5,566.00	174.00	3.23%
001.6021.5111.010	IPERS-NON UNION	33,198.72	34,816.00	22,469.33	34,627.00	36,237.00	1,610.00	4.65%
001.6021.5121.010	GRP INSUR-NON UNION	61,114.93	67,540.00	43,750.94	71,015.00	75,848.00	4,833.00	6.81%
001.6021.5122.000	RETIREES GRP HLTH INS	2,283.14	2,414.00	0.00	0.00	0.00	0.00	0.00%
001.6021.5123.010	WORKCOMP-NON UNION	312.88	602.00	389.07	599.00	627.00	28.00	4.67%
001.6021.5210.000	ADVERTISING & LEGAL PUB	203.86	0.00	11.07	11.00	0.00	-11.00	-100.00%
001.6021.5215.000	BANK CHARGES	1,991.34	1,600.00	1,281.35	2,000.00	2,000.00	0.00	0.00%
001.6021.5230.000	CONSULTING & PROF FEES	1,732.50	6,850.00	6,255.00	6,775.00	9,350.00	2,575.00	38.01%
001.6021.5232.000	AUDITING FEES	37,209.00	40,086.00	39,933.00	39,933.00	41,538.00	1,605.00	4.02%
001.6021.5280.000	DUES, MEMBER, SUBSCRIPTN	1,125.00	1,200.00	1,075.00	1,200.00	1,200.00	0.00	0.00%
001.6021.5300.000	INSURANCE - TORT LIAB	2,603.68	2,886.00	0.00	2,580.00	3,096.00	516.00	20.00%
001.6021.5342.000	CONTRACT-OUTSIDE HELP	9.00	0.00	0.00	0.00	0.00	0.00	0.00%
001.6021.5344.000	CONTRACT-MAINTENANCE	128.63	200.00	239.01	450.00	450.00	0.00	0.00%
001.6021.5347.000	CONTRACT-SOFTWARE MAINT	43,787.19	49,000.00	42,149.76	46,000.00	48,000.00	2,000.00	4.35%
001.6021.5360.000	POSTAGE & SHIPPING	0.00	300.00	2,168.40	2,353.00	2,200.00	-153.00	-6.50%
001.6021.5410.000	REPAIRS & MAINTENANCE	103.07	100.00	0.00	100.00	100.00	0.00	0.00%
001.6021.5450.000	TELEPHONE/OTHR COMMNCT	1,534.81	1,800.00	972.26	1,600.00	1,600.00	0.00	0.00%
001.6021.5460.000	CONFERENCE EXPENSE	125.00	500.00	50.00	500.00	500.00	0.00	0.00%
001.6021.5470.000	TRAINING	0.00	200.00	0.00	200.00	200.00	0.00	0.00%
001.6021.5472.000	MILEAGE REIMBURSE	161.78	0.00	0.00	0.00	0.00	0.00	0.00%

Budget Comparison Report

Account Number		2021-2022 Total Activity	2022-2023 Total Budget	2022-2023 YTD Activity Through Feb	Parent Budget 2022-2023 FY2023 Amend	Comparison 1 Budget 2023-2024 FY2024 Dept Request	Comparison 1 to Parent Budget Increase / (Decrease)	%
001.6021.5600.000	OPERATING SUPPLIES	158.55	100.00	0.00	100.00	100.00	0.00	0.00%
001.6021.5605.000	OFFICE SUPPLIES	1,493.68	2,551.00	819.01	2,000.00	2,000.00	0.00	0.00%
001.6021.5612.000	COMPUTER COMPONENTS	114.14	500.00	0.00	500.00	500.00	0.00	0.00%
001.6021.5702.000	MINOR OFFICE FURN/EQUIP	845.06	100.00	682.09	800.00	100.00	-700.00	-87.50%
001.6021.5703.000	MINOR COMPUTER	23.50	200.00	0.00	200.00	200.00	0.00	0.00%
001.6021.5704.000	MINOR SOFTWARE <$5,000	488.39	20.00	0.00	20.00	20.00	0.00	0.00%
001.6021.5718.000	MINOR EQUIP, UNCLASSFIED	0.00	100.00	0.00	100.00	100.00	0.00	0.00%
001.6021.5870.000	FINES & SERVICE CHRGS	0.00	25.00	17,928.87	17,929.00	25.00	-17,904.00	-99.86%
001.6021.5990.000	CASH SHORT & (OVER)	-110.40	10.00	-20.91	10.00	10.00	0.00	0.00%
	Total Expense:	**567,047.92**	**613,726.00**	**440,349.95**	**634,858.00**	**642,232.00**	**7,374.00**	**1.16%**
	Total Function: 6021 - Finance:	**8,444,752.00**	**8,736,435.00**	**5,100,638.02**	**8,849,111.00**	**9,179,201.00**	**330,090.00**	**3.73%**
Function: 6025 - HR								
Revenue								
001.6025.4492.000	PERSONNEL MISC CHRGS	15,000.00	15,000.00	7,500.00	15,000.00	25,000.00	10,000.00	66.67%
001.6025.4875.000	RFNDS/REIMB:	220.00	0.00	0.00	0.00	0.00	0.00	0.00%
	Total Revenue:	**15,220.00**	**15,000.00**	**7,500.00**	**15,000.00**	**25,000.00**	**10,000.00**	**66.67%**
Expense								
001.6025.5010.010	REGULAR-NON UNION	88,193.35	90,907.00	60,207.45	91,767.00	93,634.00	1,867.00	2.03%
001.6025.5101.010	SOCIAL SECURITY-NON UNION	5,188.82	5,636.00	3,549.51	5,689.00	5,805.00	116.00	2.04%
001.6025.5102.010	MEDICARE-NON UNION	1,213.55	1,318.00	830.17	1,330.00	1,358.00	28.00	2.11%
001.6025.5111.010	IPERS-NON UNION	8,325.45	8,582.00	5,602.43	8,582.00	8,839.00	257.00	2.99%
001.6025.5121.010	GRP INSUR-NON UNION	12,014.26	13,224.00	8,637.93	13,905.00	14,748.00	843.00	6.06%
001.6025.5123.010	WORKCOMP-NON UNION	78.36	148.00	96.97	149.00	153.00	4.00	2.68%
001.6025.5230.000	CONSULTING & PROF FEES	337.50	0.00	0.00	0.00	0.00	0.00	0.00%
001.6025.5280.000	DUES, MEMBER, SUBSCRIPTN	1,179.00	1,000.00	265.00	1,000.00	1,000.00	0.00	0.00%
001.6025.5300.000	INSURANCE - TORT LIAB	551.76	576.00	0.00	528.00	634.00	106.00	20.08%
001.6025.5342.000	CONTRACT-OUTSIDE HELP	0.00	1,000.00	1,635.25	1,000.00	1,000.00	0.00	0.00%
001.6025.5360.000	POSTAGE & SHIPPING	20.96	0.00	0.00	0.00	0.00	0.00	0.00%
001.6025.5450.000	TELEPHONE/OTHR COMMNCT	383.86	500.00	257.12	500.00	500.00	0.00	0.00%
001.6025.5460.000	CONFERENCE EXPENSE	886.75	2,000.00	1,014.41	2,000.00	2,000.00	0.00	0.00%
001.6025.5472.000	MILEAGE REIMBURSE	29.25	0.00	0.00	0.00	0.00	0.00	0.00%
001.6025.5600.000	OPERATING SUPPLIES	0.00	100.00	0.00	100.00	100.00	0.00	0.00%
001.6025.5605.000	OFFICE SUPPLIES	567.23	2,000.00	307.60	2,000.00	2,000.00	0.00	0.00%
	Total Expense:	**118,970.10**	**126,991.00**	**82,403.84**	**128,550.00**	**131,771.00**	**3,221.00**	**2.51%**
	Total Function: 6025 - HR:	**-103,750.10**	**-111,991.00**	**-74,903.84**	**-113,550.00**	**-106,771.00**	**6,779.00**	**-5.97%**

Budget Comparison Report

Account Number		2021-2022 Total Activity	2022-2023 Total Budget	2022-2023 YTD Activity Through Feb	Parent Budget 2022-2023 FY2023 Amend	Comparison 1 Budget 2023-2024 FY2024 Dept Request	Comparison 1 to Parent Budget Increase / (Decrease)	%
Function: 6030 - Elections								
Expense								
001.6030.5365.000	ELECTION EXPENSE	3,806.70	0.00	0.00	0.00	4,000.00	4,000.00	0.00%
	Total Expense:	**3,806.70**	**0.00**	**0.00**	**0.00**	**4,000.00**	**4,000.00**	**0.00%**
	Total Function: 6030 - Elections:	**3,806.70**	**0.00**	**0.00**	**0.00**	**4,000.00**	**4,000.00**	**0.00%**
Function: 6040 - Legal Services								
Revenue								
001.6040.4875.000	REFND/REIMB: LEGAL	0.00	0.00	292.00	292.00	0.00	-292.00	-100.00%
	Total Revenue:	**0.00**	**0.00**	**292.00**	**292.00**	**0.00**	**-292.00**	**-100.00%**
Expense								
001.6040.5230.000	CONSULTING & PROF FEES	8,448.50	5,000.00	4,005.00	3,500.00	5,000.00	1,500.00	42.86%
001.6040.5234.000	LEGAL EXPENSES	63,955.77	40,000.00	37,509.20	50,000.00	40,000.00	-10,000.00	-20.00%
001.6040.5235.000	UNION NEGOTIATING FEES	1,455.10	0.00	60.00	60.00	20,000.00	19,940.00	33,233.33%
001.6040.5236.000	LEGAL-PERSONNEL	3,630.80	6,000.00	504.00	5,000.00	6,000.00	1,000.00	20.00%
001.6040.5250.000	COURT, RECORD & FILING FEE	105.00	250.00	2.75	250.00	250.00	0.00	0.00%
001.6040.5300.000	INSURANCE - TORT LIAB	342.79	373.00	0.00	358.00	430.00	72.00	20.11%
001.6040.5331.000	PAYMENTS-OTHER ENTITIES	10,000.00	10,000.00	7,500.00	10,000.00	10,000.00	0.00	0.00%
001.6040.5342.000	CONTRACT-OUTSIDE HELP	0.00	0.00	0.00	0.00	0.00	0.00	0.00%
001.6040.5360.000	POSTAGE & SHIPPING	0.00	0.00	39.47	0.00	0.00	0.00	0.00%
001.6040.5460.000	CONFERENCE EXPENSE	224.00	0.00	0.00	0.00	0.00	0.00	0.00%
001.6040.5472.000	MILEAGE REIMBUSMENT	0.00	0.00	84.24	500.00	500.00	0.00	0.00%
	Total Expense:	**88,161.96**	**61,623.00**	**49,704.66**	**69,668.00**	**82,180.00**	**12,512.00**	**17.96%**
	Total Function: 6040 - Legal Services:	**-88,161.96**	**-61,623.00**	**-49,412.66**	**-69,376.00**	**-82,180.00**	**-12,804.00**	**18.46%**
Function: 6050 - City Hall & Gen Buildings								
Revenue								
001.6050.4875.000	REFUNDS/REIMB	1,959.33	3,700.00	1,811.12	1,900.00	3,700.00	1,800.00	94.74%
001.6050.4879.000	REBATES	0.00	0.00	41.54	0.00	0.00	0.00	0.00%
	Total Revenue:	**1,959.33**	**3,700.00**	**1,852.66**	**1,900.00**	**3,700.00**	**1,800.00**	**94.74%**
Expense								
001.6050.5010.010	REGULAR-NON UNION	0.00	25,021.00	20,243.78	46,688.00	81,748.00	35,060.00	75.09%
001.6050.5010.040	REGULAR-PPME UNION	0.00	0.00	3,563.21	18,650.00	44,343.00	25,693.00	137.76%
001.6050.5020.040	OVERTIME-PPME UNION	0.00	0.00	4.23	0.00	0.00	0.00	0.00%
001.6050.5050.060	PART-TIME REGULAR	5,091.09	0.00	546.53	547.00	0.00	-547.00	-100.00%
001.6050.5060.060	TERM PAYOUTS-PT REG	76.23	0.00	0.00	0.00	0.00	0.00	0.00%
001.6050.5101.010	SOCIAL SECURITY-NON UNION	0.00	1,551.00	1,227.72	2,895.00	5,068.00	2,173.00	75.06%
001.6050.5101.040	SOCIAL SECURITY-PPME UNIO	0.00	0.00	199.57	1,156.00	2,749.00	1,593.00	137.80%
001.6050.5101.060	SOCIAL SECURITY-PT REGULAR	320.36	0.00	33.89	34.00	0.00	-34.00	-100.00%

Budget Comparison Report

Account Number		2021-2022 Total Activity	2022-2023 Total Budget	2022-2023 YTD Activity Through Feb	Parent Budget 2022-2023 FY2023 Amend	Comparison 1 Budget 2023-2024 FY2024 Dept Request	Comparison 1 to Parent Budget Increase / (Decrease)	%
001.6050.5102.010	MEDICARE-NON UNION	0.00	363.00	287.10	677.00	1,185.00	508.00	75.04%
001.6050.5102.040	MEDICARE-PPME UNION	0.00	0.00	46.70	270.00	643.00	373.00	138.15%
001.6050.5102.060	MEDICARE-PT REGULAR	74.91	0.00	7.92	8.00	0.00	-8.00	-100.00%
001.6050.5111.010	IPERS-NON UNION	0.00	2,362.00	1,850.53	4,342.00	7,717.00	3,375.00	77.73%
001.6050.5111.040	IPERS-PPME UNION	0.00	0.00	336.79	1,761.00	4,186.00	2,425.00	137.71%
001.6050.5111.060	IPERS-PT REGULAR	480.60	0.00	51.59	0.00	0.00	0.00	0.00%
001.6050.5121.010	GRP INSUR-NON UNION	0.00	11,994.00	2,508.44	5,338.00	4,352.00	-986.00	-18.47%
001.6050.5121.040	GRP INSUR-PPME UNION	0.00	0.00	925.44	3,665.00	11,661.00	7,996.00	218.17%
001.6050.5123.010	WORKCOMP-NON UNION	0.00	619.00	601.44	1,139.00	2,846.00	1,707.00	149.87%
001.6050.5123.040	WORKCOMP-PPME UNION	0.00	0.00	135.84	710.00	1,688.00	978.00	137.75%
001.6050.5123.060	WORKCOMP-PT REGULAR	73.58	0.00	13.54	0.00	0.00	0.00	0.00%
001.6050.5251.000	LICENSE & PERMITS	0.00	325.00	0.00	300.00	300.00	0.00	0.00%
001.6050.5290.000	INSURANCE - GENERAL	6,702.25	7,206.00	0.00	11,326.00	13,591.00	2,265.00	20.00%
001.6050.5300.000	INSURANCE - TORT LIAB	272.83	261.00	0.00	190.00	228.00	38.00	20.00%
001.6050.5331.000	PAYMENTS-OTHER ENTITIES	0.00	3,000.00	0.00	0.00	0.00	0.00	0.00%
001.6050.5342.000	CONTRACT-OUTSIDE HELP	3,354.21	3,300.00	1,538.84	3,300.00	3,300.00	0.00	0.00%
001.6050.5344.000	CONTRACT-MAINTENANCE	4,106.54	5,600.00	2,293.20	5,600.00	9,500.00	3,900.00	69.64%
001.6050.5360.000	POSTAGE & SHIPPING	7.20	0.00	0.00	0.00	0.00	0.00	0.00%
001.6050.5410.000	REPAIRS & MAINTENANCE	8,756.28	3,300.00	8,269.62	10,000.00	10,000.00	0.00	0.00%
001.6050.5450.000	TELEPHONE/OTHR COMMNCT	3,874.56	4,000.00	2,590.45	4,000.00	4,000.00	0.00	0.00%
001.6050.5480.000	UTILITIES	0.00	0.00	0.00	0.00	0.00	0.00	0.00%
001.6050.5481.000	ELECTRICITY	1,611.41	3,000.00	1,154.05	3,000.00	3,000.00	0.00	0.00%
001.6050.5482.000	NATURAL GAS	0.00	0.00	10,267.38	17,500.00	9,000.00	-8,500.00	-48.57%
001.6050.5570.000	VEHICLE GAS	0.00	0.00	1,033.19	2,400.00	3,600.00	1,200.00	50.00%
001.6050.5600.000	OPERATING SUPPLIES	2,824.14	6,000.00	1,945.31	4,000.00	5,000.00	1,000.00	25.00%
001.6050.5605.000	OFFICE SUPPLIES	67.97	800.00	0.00	800.00	800.00	0.00	0.00%
001.6050.5611.000	BLDG,GRD OPER/MAINT SPLY	1,452.00	2,000.00	2,405.23	5,000.00	5,000.00	0.00	0.00%
001.6050.5704.000	MINOR SOFTWARE	0.00	0.00	137.43	150.00	150.00	0.00	0.00%
001.6050.5718.000	MINOR EQUIP, UNCLASSFIED	547.11	1,200.00	2,080.38	3,000.00	2,000.00	-1,000.00	-33.33%
001.6050.5776.000	BUILDINGS & IMPROVEMENTS	0.00	0.00	4.11	5.00	0.00	-5.00	-100.00%
	Total Expense:	**39,693.27**	**81,902.00**	**66,303.45**	**158,451.00**	**237,655.00**	**79,204.00**	**49.99%**
	Total Function: 6050 - City Hall & Gen Buildings:	**-37,733.94**	**-78,202.00**	**-64,450.79**	**-156,551.00**	**-233,955.00**	**-77,404.00**	**49.44%**
Function: 6051 - Carnegie Bldg								
Revenue								
001.6051.4875.000	RFNDS/REIMB	20.66	0.00	0.00	0.00	0.00	0.00	0.00%
	Total Revenue:	**20.66**	**0.00**	**0.00**	**0.00**	**0.00**	**0.00**	**0.00%**
Expense								
001.6051.5290.000	INSURANCE - GENERAL	2,497.40	2,774.00	0.00	3,292.00	3,950.00	658.00	19.99%

Account Number		2021-2022 Total Activity	2022-2023 Total Budget	2022-2023 YTD Activity Through Feb	Parent Budget 2022-2023 FY2023 Amend	Comparison 1 Budget 2023-2024 FY2024 Dept Request	Comparison 1 to Parent Budget Increase / (Decrease)	%
001.6051.5300.000	INSURANCE - TORT LIAB	134.36	125.00	0.00	111.00	133.00	22.00	19.82%
001.6051.5342.000	CONTRACT-OUTSIDE HELP	331.54	1,340.00	172.40	1,340.00	1,340.00	0.00	0.00%
001.6051.5344.000	CONTRACT-MAINTENANCE	3,483.39	5,100.00	2,979.02	5,100.00	5,100.00	0.00	0.00%
001.6051.5410.000	REPAIRS & MAINTENANCE	1,618.74	1,600.00	3,302.27	6,000.00	6,000.00	0.00	0.00%
001.6051.5481.000	ELECTRICITY	14,584.88	13,000.00	9,824.64	15,000.00	15,500.00	500.00	3.33%
001.6051.5482.000	NATURAL GAS	4,898.93	3,500.00	3,908.97	5,000.00	5,200.00	200.00	4.00%
001.6051.5600.000	OPERATING SUPPLIES	836.23	500.00	1,100.89	2,700.00	2,700.00	0.00	0.00%
001.6051.5611.000	BLDG,GRD OPER/MAINT SPLY	221.79	500.00	431.97	1,000.00	1,000.00	0.00	0.00%
001.6051.5718.000	MINOR EQUIP, UNCLASSIFIED	5,866.35	0.00	249.99	800.00	800.00	0.00	0.00%
	Total Expense:	**34,473.61**	**28,439.00**	**21,970.15**	**40,343.00**	**41,723.00**	**1,380.00**	**3.42%**
	Total Function: 6051 - Carnegie Bldg:	**-34,452.95**	**-28,439.00**	**-21,970.15**	**-40,343.00**	**-41,723.00**	**-1,380.00**	**3.42%**
Function: 6070 - Data Processing,IT								
Revenue								
001.6070.4875.000	RFNDS/REIMB: D.PROC	0.00	0.00	31.45	0.00	0.00	0.00	0.00%
	Total Revenue:	**0.00**	**0.00**	**31.45**	**0.00**	**0.00**	**0.00**	**0.00%**
Expense								
001.6070.5230.000	CONSULTING & PROF FEES	0.00	0.00	0.00	0.00	0.00	0.00	0.00%
001.6070.5300.000	INSURANCE - TORT LIAB	258.19	255.00	0.00	233.00	280.00	47.00	20.17%
001.6070.5342.000	CONTRACT-OUTSIDE HELP	20.00	500.00	440.00	2,000.00	2,000.00	0.00	0.00%
001.6070.5347.000	CONTRACT-SOFTWARE MAINT	59,522.91	59,000.00	53,173.98	80,000.00	70,000.00	-10,000.00	-12.50%
001.6070.5612.000	COMPUTER COMPONENTS	0.00	1,500.00	0.00	1,500.00	1,500.00	0.00	0.00%
001.6070.5703.000	MINOR COMPUTER	2,939.64	1,000.00	0.00	1,000.00	1,000.00	0.00	0.00%
001.6070.5704.000	MINOR SOFTWARE <$5,000	0.00	1,200.00	0.00	1,200.00	1,200.00	0.00	0.00%
001.6070.5718.000	MINOR EQUIP, UNCLASSFIED	0.00	0.00	1,659.00	1,659.00	0.00	-1,659.00	-100.00%
	Total Expense:	**62,740.74**	**63,455.00**	**55,272.98**	**87,592.00**	**75,980.00**	**-11,612.00**	**-13.26%**
	Total Function: 6070 - Data Processing,IT:	**-62,740.74**	**-63,455.00**	**-55,241.53**	**-87,592.00**	**-75,980.00**	**11,612.00**	**-13.26%**
Function: 6075 - Cable TV								
Expense								
001.6075.5300.000	INSURANCE - TORT LIAB	293.02	0.00	0.00	0.00	0.00	0.00	0.00%
	Total Expense:	**293.02**	**0.00**	**0.00**	**0.00**	**0.00**	**0.00**	**0.00%**
	Total Function: 6075 - Cable TV:	**293.02**	**0.00**	**0.00**	**0.00**	**0.00**	**0.00**	**0.00%**
Function: 6900 - Other Gen Gov								
Revenue								
001.6900.4620.000	RENTS	6.00	0.00	0.00	0.00	0.00	0.00	0.00%
001.6900.4875.000	RFNDS/REIMB: GEN GVT	2,039.45	1,000.00	3,505.40	1,000.00	1,000.00	0.00	0.00%
001.6900.4876.000	MISC REV	802.65	500.00	741.24	500.00	500.00	0.00	0.00%

Budget Comparison Report

Account Number		2021-2022 Total Activity	2022-2023 Total Budget	2022-2023 YTD Activity Through Feb	Parent Budget 2022-2023 FY2023 Amend	Comparison 1 Budget 2023-2024 FY2024 Dept Request	Comparison 1 to Parent Budget Increase / (Decrease)	%
001.6900.4960.000	SALE OF F.A.-GEN GOVT	2.00	0.00	0.00	0.00	0.00	0.00	0.00%
	Total Revenue:	**2,850.10**	**1,500.00**	**4,246.64**	**1,500.00**	**1,500.00**	**0.00**	**0.00%**
Expense								
001.6900.5061.000	RHSA PAYOUTS	0.00	71,450.00	0.00	7,508.00	40,065.00	32,557.00	433.63%
001.6900.5290.000	INSURANCE - GENERAL	0.25	534.00	0.00	0.00	668.00	668.00	0.00%
001.6900.5300.000	INSURANCE - TORT LIAB	1.94	33.00	0.00	0.00	2.00	2.00	0.00%
001.6900.5341.000	FLEXIBLE BENEFIT CLAIMS	2,487.30	0.00	0.00	0.00	0.00	0.00	0.00%
001.6900.5342.000	CONTRACT-OUTSIDE HELP	3,675.48	600.00	1,552.87	6,215.00	7,600.00	1,385.00	22.28%
001.6900.5485.000	STORM WATER FEES	799.01	799.00	799.01	800.00	800.00	0.00	0.00%
001.6900.5570.000	VEHICLE GAS	0.00	1,200.00	0.00	1,200.00	1,200.00	0.00	0.00%
001.6900.5600.000	OPERATING SUPPLIES	548.31	0.00	882.78	1,000.00	1,000.00	0.00	0.00%
001.6900.5700.000	MINOR EQUIP 500-4999	0.00	1,000.00	0.00	1,000.00	1,000.00	0.00	0.00%
001.6900.5991.000	CHECKS RETURNED & COLLECT	22.60	150.00	0.00	150.00	150.00	0.00	0.00%
	Total Expense:	**7,534.89**	**75,766.00**	**3,234.66**	**17,873.00**	**52,485.00**	**34,612.00**	**193.66%**
	Total Function: 6900 - Other Gen Gov:	**-4,684.79**	**-74,266.00**	**1,011.98**	**-16,373.00**	**-50,985.00**	**-34,612.00**	**211.40%**
Function: 8016 - Sanitary Sewer								
Revenue								
001.8016.4616.000	INT CHRGD - ACCTS REC	14.38	0.00	0.94	0.00	0.00	0.00	0.00%
	Total Revenue:	**14.38**	**0.00**	**0.94**	**0.00**	**0.00**	**0.00**	**0.00%**
	Total Function: 8016 - Sanitary Sewer:	**14.38**	**0.00**	**0.94**	**0.00**	**0.00**	**0.00**	**0.00%**
Function: 9000 - 9000								
Revenue								
001.9000.6500.110	TR FRM ROAD USE TAX	1,116,774.01	1,211,244.00	577,154.24	1,161,940.00	1,176,363.00	14,423.00	1.24%
001.9000.6500.112	TR FRM EMPLOYEE BNFT	2,608,912.25	2,935,235.00	1,323,503.77	2,898,190.00	3,070,871.00	172,681.00	5.96%
001.9000.6500.117	TR FRM POLICE RETIRE	1,237,682.69	1,200,148.00	560,984.78	1,151,802.00	1,180,148.00	28,346.00	2.46%
001.9000.6500.119	TR FROM EMEG	251,339.05	255,879.00	131,473.54	255,908.00	262,974.00	7,066.00	2.76%
001.9000.6500.121	TR FRM LOCAL OPTION	0.00	0.00	126,160.00	126,160.00	328,526.00	202,366.00	160.40%
001.9000.6500.125	TR FRM TIF	136,401.60	188,743.00	110,749.66	372,694.00	127,915.00	-244,779.00	-65.68%
001.9000.6500.152	TRANSFER IN - FUND 152	20.00	0.00	0.00	0.00	0.00	0.00	0.00%
001.9000.6500.389	TRANSFER IN - ARPA	187,901.62	288,147.00	0.00	288,147.00	49,389.00	-238,758.00	-82.86%
	Total Revenue:	**5,539,031.22**	**6,079,396.00**	**2,830,025.99**	**6,254,841.00**	**6,196,186.00**	**-58,655.00**	**-0.94%**
Expense								
001.9000.7500.110	TRANSFER OUT - RUT	0.00	0.00	2,231.36	2,232.00	0.00	-2,232.00	-100.00%
001.9000.7500.125	Transfer to TIF	8,601.50	0.00	0.00	0.00	0.00	0.00	0.00%
001.9000.7500.145	TRANSFER OUT - TORNADO GE	0.99	0.00	0.00	0.00	0.00	0.00	0.00%
001.9000.7500.149	TRANSFER OUT - FUND 149	4,558.93	0.00	0.00	0.00	0.00	0.00	0.00%
001.9000.7500.355	TRANSFER OUT - D&D	18,034.62	20,000.00	0.00	20,000.00	20,000.00	0.00	0.00%

Account Number		2021-2022 Total Activity	2022-2023 Total Budget	2022-2023 YTD Activity Through Feb	Parent Budget 2022-2023 FY2023 Amend	Comparison 1 Budget 2023-2024 FY2024 Dept Request	Comparison 1 to Parent Budget Increase / (Decrease)	%
001.9000.7500.690	TRANSFER OUT - TRANSIT	155,551.67	250,000.00	121,074.97	250,000.00	275,000.00	25,000.00	10.00%
	Total Expense:	**186,747.71**	**270,000.00**	**123,306.33**	**272,232.00**	**295,000.00**	**22,768.00**	**8.36%**
	Total Function: 9000 - 9000:	**5,352,283.51**	**5,809,396.00**	**2,706,719.66**	**5,982,609.00**	**5,901,186.00**	**-81,423.00**	**-1.36%**
	Total Fund: 001 - GENERAL FUND:	**0.00**	**-0.23**	**-1,214,213.42**	**-49,633.00**	**0.00**	**49,633.00**	**-100.00%**
Fund: 010 - CASH FLOW RESERVE FUND								
Function: 6021 - Finance								
Revenue								
010.6021.4610.000	INTEREST ON INVESTMENTS	22,088.96	23,000.00	31,058.68	55,000.00	60,000.00	5,000.00	9.09%
	Total Revenue:	**22,088.96**	**23,000.00**	**31,058.68**	**55,000.00**	**60,000.00**	**5,000.00**	**9.09%**
	Total Function: 6021 - Finance:	**22,088.96**	**23,000.00**	**31,058.68**	**55,000.00**	**60,000.00**	**5,000.00**	**9.09%**
Function: 9000 - 9000								
Revenue								
010.9000.6500.121	TR FROM LOCAL OPTION	99,023.00	91,512.00	0.00	91,512.00	288,000.00	196,488.00	214.71%
	Total Revenue:	**99,023.00**	**91,512.00**	**0.00**	**91,512.00**	**288,000.00**	**196,488.00**	**214.71%**
	Total Function: 9000 - 9000:	**99,023.00**	**91,512.00**	**0.00**	**91,512.00**	**288,000.00**	**196,488.00**	**214.71%**
	Total Fund: 010 - CASH FLOW RESERVE FUND:	**121,111.96**	**114,512.00**	**31,058.68**	**146,512.00**	**348,000.00**	**201,488.00**	**137.52%**
Fund: 030 - CAPITAL RESERVE								
Function: 1010 - Police Operations/Crime Prevention								
Revenue								
030.1010.4875.000	RFNDS/REIMB	760.00	0.00	606.00	606.00	0.00	-606.00	-100.00%
	Total Revenue:	**760.00**	**0.00**	**606.00**	**606.00**	**0.00**	**-606.00**	**-100.00%**
Expense								
030.1010.5410.000	REPAIRS & MAINTENANCE	2,200.00	0.00	0.00	0.00	0.00	0.00	0.00%
030.1010.5565.000	VEHICLE OPER/MAINT SPPLY	1,508.80	0.00	850.00	0.00	0.00	0.00	0.00%
030.1010.5703.000	MINOR COMPUTER	6,682.23	0.00	7,003.54	0.00	0.00	0.00	0.00%
030.1010.5718.000	MINOR EQUIP, UNCLASSFIED	21,447.46	32,400.00	17,943.67	32,400.00	41,000.00	8,600.00	26.54%
030.1010.5740.000	COMPUTER EQUIP > $5,000	7,523.80	0.00	0.00	0.00	0.00	0.00	0.00%
030.1010.5750.000	OTHER CAP EQUIP > $5,000	96,919.78	130,000.00	60,387.01	190,000.00	198,000.00	8,000.00	4.21%
	Total Expense:	**136,282.07**	**162,400.00**	**86,184.22**	**222,400.00**	**239,000.00**	**16,600.00**	**7.46%**
	Total Function: 1010 - Police Operations/Crime Prevention:	**-135,522.07**	**-162,400.00**	**-85,578.22**	**-221,794.00**	**-239,000.00**	**-17,206.00**	**7.76%**
Function: 1050 - Fire Department								
Expense								
030.1050.5718.000	MINOR EQUIP, UNCLASSFIED	499.99	0.00	0.00	0.00	0.00	0.00	0.00%

Budget Comparison Report

Account Number		2021-2022 Total Activity	2022-2023 Total Budget	2022-2023 YTD Activity Through Feb	Parent Budget 2022-2023 FY2023 Amend	Comparison 1 Budget 2023-2024 FY2024 Dept Request	Comparison 1 to Parent Budget Increase / (Decrease)	%
030.1050.5750.000	OTHER CAP EQUIP > $5,000	27,840.00	35,600.00	29,454.91	38,843.00	41,388.00	2,545.00	6.55%
	Total Expense:	**28,339.99**	**35,600.00**	**29,454.91**	**38,843.00**	**41,388.00**	**2,545.00**	**6.55%**
	Total Function: 1050 - Fire Department:	**28,339.99**	**35,600.00**	**29,454.91**	**38,843.00**	**41,388.00**	**2,545.00**	**6.55%**
Function: 1070 - Building Inspections								
Expense								
030.1070.5750.000	OTHER CAP EQUIP > $5,000	0.00	2,500.00	2,500.00	2,500.00	0.00	-2,500.00	-100.00%
	Total Expense:	**0.00**	**2,500.00**	**2,500.00**	**2,500.00**	**0.00**	**-2,500.00**	**-100.00%**
	Total Function: 1070 - Building Inspections:	**0.00**	**2,500.00**	**2,500.00**	**2,500.00**	**0.00**	**-2,500.00**	**-100.00%**
Function: 1071 - Rental Inspections								
Expense								
030.1071.5750.000	OTHER CAP EQUIP > $5,000	0.00	2,500.00	2,500.00	2,500.00	0.00	-2,500.00	-100.00%
	Total Expense:	**0.00**	**2,500.00**	**2,500.00**	**2,500.00**	**0.00**	**-2,500.00**	**-100.00%**
	Total Function: 1071 - Rental Inspections:	**0.00**	**2,500.00**	**2,500.00**	**2,500.00**	**0.00**	**-2,500.00**	**-100.00%**
Function: 2080 - Airport								
Expense								
030.2080.5233.000	ENGINEERING FEES	0.00	0.00	0.00	0.00	50,000.00	50,000.00	0.00%
030.2080.5410.000	REPAIRS & MAINTENANCE	0.00	0.00	0.00	10,000.00	0.00	-10,000.00	-100.00%
	Total Expense:	**0.00**	**0.00**	**0.00**	**10,000.00**	**50,000.00**	**40,000.00**	**400.00%**
	Total Function: 2080 - Airport:	**0.00**	**0.00**	**0.00**	**10,000.00**	**50,000.00**	**40,000.00**	**400.00%**
Function: 4010 - Library Services								
Expense								
030.4010.5347.000	CONTRACT-SOFTWARE MAINT	1,000.00	0.00	19,461.92	19,462.00	20,435.00	973.00	5.00%
030.4010.5600.000	OPERATING SUPPLIES	6,316.00	0.00	0.00	0.00	0.00	0.00	0.00%
030.4010.5703.000	MINOR COMPUTER	9,089.90	0.00	0.00	0.00	0.00	0.00	0.00%
030.4010.5741.000	COMPUTER SOFTWARE > 5,00	18,552.84	19,110.00	0.00	0.00	0.00	0.00	0.00%
030.4010.5750.000	OTHER CAP EQUIP > $5,000	87,105.50	61,489.00	0.00	61,489.00	0.00	-61,489.00	-100.00%
	Total Expense:	**122,064.24**	**80,599.00**	**19,461.92**	**80,951.00**	**20,435.00**	**-60,516.00**	**-74.76%**
	Total Function: 4010 - Library Services:	**122,064.24**	**80,599.00**	**19,461.92**	**80,951.00**	**20,435.00**	**-60,516.00**	**-74.76%**
Function: 4030 - Parks								
Revenue								
030.4030.4960.000	SALE OF F.A.-PARKS	0.00	0.00	6,000.00	6,000.00	0.00	-6,000.00	-100.00%
	Total Revenue:	**0.00**	**0.00**	**6,000.00**	**6,000.00**	**0.00**	**-6,000.00**	**-100.00%**
Expense								
030.4030.5233.000	ENGINEERING FEES	0.00	0.00	3,995.78	0.00	0.00	0.00	0.00%
030.4030.5342.000	CONTRACT-OUTSIDE HELP	29,422.59	215,000.00	80,775.05	322,641.00	0.00	-322,641.00	-100.00%
030.4030.5410.000	REPAIRS & MAINTENANCE	0.00	0.00	0.00	0.00	15,000.00	15,000.00	0.00%

Budget Comparison Report

Account Number		2021-2022 Total Activity	2022-2023 Total Budget	2022-2023 YTD Activity Through Feb	Parent Budget 2022-2023 FY2023 Amend	Comparison 1 Budget 2023-2024 FY2024 Dept Request	Comparison 1 to Parent Budget Increase / (Decrease)	%
030.4030.5611.000	BLDG,GRD OPER/MAINT SPLY	1,479.00	0.00	5,123.07	0.00	0.00	0.00	0.00%
030.4030.5718.000	MINOR EQUIP, UNCLASSFIED	0.00	0.00	1,456.97	0.00	0.00	0.00	0.00%
030.4030.5750.000	OTHER CAP EQUIP > $5,000	50,908.84	87,000.00	162,632.20	107,750.00	75,000.00	-32,750.00	-30.39%
030.4030.5776.000	BUILDINGS & IMPROVEMENTS	12,735.60	25,000.00	17,472.12	12,736.00	120,000.00	107,264.00	842.21%
	Total Expense:	**94,546.03**	**327,000.00**	**271,455.19**	**443,127.00**	**210,000.00**	**-233,127.00**	**-52.61%**
	Total Function: 4030 - Parks:	**-94,546.03**	**-327,000.00**	**-265,455.19**	**-437,127.00**	**-210,000.00**	**227,127.00**	**-51.96%**
Function: 4045 - Swimming Pools								
Expense								
030.4045.5342.000	CONTRACT-OUTSIDE HELP	0.00	20,000.00	0.00	20,000.00	20,000.00	0.00	0.00%
030.4045.5600.000	OPERATING SUPPLIES	0.00	0.00	4,056.12	0.00	0.00	0.00	0.00%
030.4045.5718.000	MINOR EQUIP, UNCLASSFIED	4,954.27	0.00	0.00	0.00	0.00	0.00	0.00%
	Total Expense:	**4,954.27**	**20,000.00**	**4,056.12**	**20,000.00**	**20,000.00**	**0.00**	**0.00%**
	Total Function: 4045 - Swimming Pools:	**4,954.27**	**20,000.00**	**4,056.12**	**20,000.00**	**20,000.00**	**0.00**	**0.00%**
Function: 5900 - Other Community and Economic Dev.								
Expense								
030.5900.5750.000	OTHER CAP EQUIP > $5,000	222.49	0.00	0.00	0.00	0.00	0.00	0.00%
	Total Expense:	**222.49**	**0.00**	**0.00**	**0.00**	**0.00**	**0.00**	**0.00%**
Total Function: 5900 - Other Community and Economic Dev.:		**222.49**	**0.00**	**0.00**	**0.00**	**0.00**	**0.00**	**0.00%**
Function: 6020 - Clerk								
Expense								
030.6020.5750.000	OTHER CAP EQUIP > $5,000	0.00	5,500.00	5,474.00	5,474.00	0.00	-5,474.00	-100.00%
	Total Expense:	**0.00**	**5,500.00**	**5,474.00**	**5,474.00**	**0.00**	**-5,474.00**	**-100.00%**
	Total Function: 6020 - Clerk:	**0.00**	**5,500.00**	**5,474.00**	**5,474.00**	**0.00**	**-5,474.00**	**-100.00%**
Function: 6021 - Finance								
Revenue								
030.6021.4610.000	INTEREST ON INVESTMENTS	0.00	0.00	13.09	0.00	0.00	0.00	0.00%
	Total Revenue:	**0.00**	**0.00**	**13.09**	**0.00**	**0.00**	**0.00**	**0.00%**
	Total Function: 6021 - Finance:	**0.00**	**0.00**	**13.09**	**0.00**	**0.00**	**0.00**	**0.00%**
Function: 6070 - Data Processing,IT								
Expense								
030.6070.5612.000	COMPUTER COMPONENTS	138.00	0.00	0.00	0.00	0.00	0.00	0.00%
030.6070.5703.000	MINOR COMPUTER	12,259.47	22,500.00	2,567.55	22,500.00	22,500.00	0.00	0.00%
030.6070.5718.000	MINOR EQUIP, UNCLASSFIED	0.00	0.00	4,797.60	10,000.00	0.00	-10,000.00	-100.00%

Account Number		2021-2022 Total Activity	2022-2023 Total Budget	2022-2023 YTD Activity Through Feb	Parent Budget 2022-2023 FY2023 Amend	Comparison 1 Budget 2023-2024 FY2024 Dept Request	Comparison 1 to Parent Budget Increase / (Decrease)	%
030.6070.5740.000	COMPUTER EQUIP > $5,000	39,613.30	28,000.00	0.00	39,000.00	35,000.00	-4,000.00	-10.26%
	Total Expense:	**52,010.77**	**50,500.00**	**7,365.15**	**71,500.00**	**57,500.00**	**-14,000.00**	**-19.58%**
	Total Function: 6070 - Data Processing,IT:	**52,010.77**	**50,500.00**	**7,365.15**	**71,500.00**	**57,500.00**	**-14,000.00**	**-19.58%**
Function: 6900 - Other Gen Gov								
Revenue								
030.6900.4875.000	RFNDS/REIMB: GEN GVT	61.18	0.00	0.00	0.00	0.00	0.00	0.00%
	Total Revenue:	**61.18**	**0.00**	**0.00**	**0.00**	**0.00**	**0.00**	**0.00%**
	Total Function: 6900 - Other Gen Gov:	**61.18**	**0.00**	**0.00**	**0.00**	**0.00**	**0.00**	**0.00%**
Function: 9000 - 9000								
Revenue								
030.9000.6500.300	TR FRM CIP (CAP IMPR	437,598.68	796,599.00	319,252.34	890,689.00	696,423.00	-194,266.00	-21.81%
	Total Revenue:	**437,598.68**	**796,599.00**	**319,252.34**	**890,689.00**	**696,423.00**	**-194,266.00**	**-21.81%**
Expense								
030.9000.7500.110	TRANSFER OUT - FUND 110 RL	0.00	0.00	0.00	0.00	8,100.00	8,100.00	0.00%
030.9000.7500.132	Transfer Out - Grants	0.00	110,000.00	0.00	0.00	0.00	0.00	0.00%
030.9000.7500.312	TRANSFER OUT - AIRPORT CAF	0.00	0.00	0.00	0.00	50,000.00	50,000.00	0.00%
	Total Expense:	**0.00**	**110,000.00**	**0.00**	**0.00**	**58,100.00**	**58,100.00**	**0.00%**
	Total Function: 9000 - 9000:	**437,598.68**	**686,599.00**	**319,252.34**	**890,689.00**	**638,323.00**	**-252,366.00**	**-28.33%**
	Total Fund: 030 - CAPITAL RESERVE:	**0.00**	**0.00**	**-102,580.08**	**0.00**	**0.00**	**0.00**	**0.00%**
Fund: 031 - CAPITAL RSRV-BLDG MAINT								
Function: 1099 - Police and Fire Building Exps								
Expense								
031.1099.5776.000	BUILDING & IMPROVEMENTS	0.00	0.00	0.00	0.00	43,000.00	43,000.00	0.00%
	Total Expense:	**0.00**	**0.00**	**0.00**	**0.00**	**43,000.00**	**43,000.00**	**0.00%**
	Total Function: 1099 - Police and Fire Building Exps:	**0.00**	**0.00**	**0.00**	**0.00**	**43,000.00**	**43,000.00**	**0.00%**
Function: 4010 - Library Services								
Expense								
031.4010.5410.000	REPAIRS & MAINTENANCE	0.00	0.00	0.00	0.00	45,000.00	45,000.00	0.00%
031.4010.5750.000	OTHER CAP EQUIP > $5,000	0.00	0.00	0.00	0.00	0.00	0.00	0.00%
	Total Expense:	**0.00**	**0.00**	**0.00**	**0.00**	**45,000.00**	**45,000.00**	**0.00%**
	Total Function: 4010 - Library Services:	**0.00**	**0.00**	**0.00**	**0.00**	**45,000.00**	**45,000.00**	**0.00%**

Budget Comparison Report

Account Number		2021-2022 Total Activity	2022-2023 Total Budget	2022-2023 YTD Activity Through Feb	Parent Budget 2022-2023 FY2023 Amend	Comparison 1 Budget 2023-2024 FY2024 Dept Request	Comparison 1 to Parent Budget Increase / (Decrease)	%
Function: 4065 - Coliseum								
Expense								
031.4065.5233.000	ENGINEERING	0.00	0.00	4,950.00	7,242.00	0.00	-7,242.00	-100.00%
	Total Expense:	**0.00**	**0.00**	**4,950.00**	**7,242.00**	**0.00**	**-7,242.00**	**-100.00%**
	Total Function: 4065 - Coliseum:	**0.00**	**0.00**	**4,950.00**	**7,242.00**	**0.00**	**-7,242.00**	**-100.00%**
Function: 6021 - Finance								
Revenue								
031.6021.4610.000	INTEREST ON INVESTMENTS	2,941.22	1,500.00	2,669.69	5,000.00	3,000.00	-2,000.00	-40.00%
	Total Revenue:	**2,941.22**	**1,500.00**	**2,669.69**	**5,000.00**	**3,000.00**	**-2,000.00**	**-40.00%**
	Total Function: 6021 - Finance:	**2,941.22**	**1,500.00**	**2,669.69**	**5,000.00**	**3,000.00**	**-2,000.00**	**-40.00%**
Function: 6050 - City Hall & Gen Buildings								
Expense								
031.6050.5410.000	REPAIRS & MAINTENANCE	0.00	0.00	12,615.94	12,616.00	0.00	-12,616.00	-100.00%
031.6050.5776.000	BUILDINGS & IMPROVEMENTS	79,831.65	12,500.00	-360.58	0.00	0.00	0.00	0.00%
	Total Expense:	**79,831.65**	**12,500.00**	**12,255.36**	**12,616.00**	**0.00**	**-12,616.00**	**-100.00%**
	Total Function: 6050 - City Hall & Gen Buildings:	**79,831.65**	**12,500.00**	**12,255.36**	**12,616.00**	**0.00**	**-12,616.00**	**-100.00%**
Function: 6051 - Carnegie Bldg								
Expense								
031.6051.5410.000	REPAIRS & MAINTENANCE	4,544.16	0.00	0.00	0.00	0.00	0.00	0.00%
031.6051.5776.000	BUILDINGS & IMPROVEMENTS	0.00	12,500.00	0.00	0.00	15,000.00	15,000.00	0.00%
	Total Expense:	**4,544.16**	**12,500.00**	**0.00**	**0.00**	**15,000.00**	**15,000.00**	**0.00%**
	Total Function: 6051 - Carnegie Bldg:	**4,544.16**	**12,500.00**	**0.00**	**0.00**	**15,000.00**	**15,000.00**	**0.00%**
Function: 6900 - Other Gen Gov								
Revenue								
031.6900.4875.000	REFUNDS/REIMB	14.33	0.00	0.00	0.00	0.00	0.00	0.00%
	Total Revenue:	**14.33**	**0.00**	**0.00**	**0.00**	**0.00**	**0.00**	**0.00%**
	Total Function: 6900 - Other Gen Gov:	**14.33**	**0.00**	**0.00**	**0.00**	**0.00**	**0.00**	**0.00%**
Function: 9000 - 9000								
Expense								
031.9000.7500.133	TRANSFER OUT - FUND 133	0.00	33,750.00	0.00	0.00	26,775.00	26,775.00	0.00%
031.9000.7500.312	TRANSFER OUT - FUND 312	0.00	0.00	0.00	0.00	11,500.00	11,500.00	0.00%
	Total Expense:	**0.00**	**33,750.00**	**0.00**	**0.00**	**38,275.00**	**38,275.00**	**0.00%**
	Total Function: 9000 - 9000:	**0.00**	**33,750.00**	**0.00**	**0.00**	**38,275.00**	**38,275.00**	**0.00%**
	Total Fund: 031 - CAPITAL RSRV-BLDG MAINT:	**-81,420.26**	**-57,250.00**	**-14,535.67**	**-14,858.00**	**-138,275.00**	**-123,417.00**	**830.64%**

Budget Comparison Report

Account Number		2021-2022 Total Activity	2022-2023 Total Budget	2022-2023 YTD Activity Through Feb	Parent Budget 2022-2023 FY2023 Amend	Comparison 1 Budget 2023-2024 FY2024 Dept Request	Comparison 1 to Parent Budget Increase / (Decrease)	%
Fund: 032 - CIP LARGE VEHICLE/EQUIPMENT								
Function: 1050 - Fire Department								
Revenue								
032.1050.4960.000	SALE OF F.A.	62,008.85	0.00	0.00	0.00	0.00	0.00	0.00%
	Total Revenue:	**62,008.85**	**0.00**	**0.00**	**0.00**	**0.00**	**0.00**	**0.00%**
Expense								
032.1050.5703.000	MINOR COMPUTER	4,638.27	0.00	0.00	0.00	0.00	0.00	0.00%
032.1050.5718.000	MINOR EQUIP,UNCLASSIFIED	565.17	0.00	0.00	0.00	0.00	0.00	0.00%
032.1050.5750.000	OTHER CAP EQUIP > $5,000	1,913.78	0.00	0.00	0.00	0.00	0.00	0.00%
	Total Expense:	**7,117.22**	**0.00**	**0.00**	**0.00**	**0.00**	**0.00**	**0.00%**
	Total Function: 1050 - Fire Department:	**54,891.63**	**0.00**	**0.00**	**0.00**	**0.00**	**0.00**	**0.00%**
Function: 9000 - 9000								
Revenue								
032.9000.6500.156	TRANS IN FIRE DEPT DONATIO	15,000.00	0.00	0.00	0.00	0.00	0.00	0.00%
032.9000.6500.300	TR FRM CIP (CAP IMPR	40,485.52	0.00	0.00	93,755.00	94,086.00	331.00	0.35%
	Total Revenue:	**55,485.52**	**0.00**	**0.00**	**93,755.00**	**94,086.00**	**331.00**	**0.35%**
	Total Function: 9000 - 9000:	**55,485.52**	**0.00**	**0.00**	**93,755.00**	**94,086.00**	**331.00**	**0.35%**
	Total Fund: 032 - CIP LARGE VEHICLE/EQUIPMENT:	**110,377.15**	**0.00**	**0.00**	**93,755.00**	**94,086.00**	**331.00**	**0.35%**
Fund: 110 - ROAD USE TAX								
Function: 2010 - Roads, Bridges, Sidewalks								
Revenue								
110.2010.4320.000	STATE ROAD USE TAXES	3,813,251.23	3,490,000.00	2,536,488.85	3,490,000.00	3,490,000.00	0.00	0.00%
110.2010.4875.000	RFNDS/REIMB	585.67	0.00	4,931.65	5,000.00	0.00	-5,000.00	-100.00%
110.2010.4879.000	REBATES	0.00	0.00	180.39	250.00	100.00	-150.00	-60.00%
110.2010.4960.000	SALE OF FA	0.00	0.00	29,000.00	29,000.00	0.00	-29,000.00	-100.00%
110.2010.4961.000	PW-NONCAPLZD ASSTS	0.00	0.00	179.95	850.00	200.00	-650.00	-76.47%
	Total Revenue:	**3,813,836.90**	**3,490,000.00**	**2,570,780.84**	**3,525,100.00**	**3,490,300.00**	**-34,800.00**	**-0.99%**
Expense								
110.2010.5010.010	REGULAR-NON UNION	11,618.61	14,382.00	8,476.85	14,038.00	13,666.00	-372.00	-2.65%
110.2010.5101.010	SOCIAL SECURITY-NON UNION	691.71	892.00	506.26	870.00	847.00	-23.00	-2.64%
110.2010.5102.010	MEDICARE-NON UNION	161.78	209.00	118.40	204.00	198.00	-6.00	-2.94%
110.2010.5111.010	IPERS-NON UNION	1,096.76	1,358.00	800.21	1,325.00	1,290.00	-35.00	-2.64%
110.2010.5121.010	GRP INSUR-NON UNION	1,183.40	2,456.00	994.54	1,882.00	1,741.00	-141.00	-7.49%
110.2010.5123.010	WORKCOMP-NON UNION	9.61	79.00	28.23	71.00	53.00	-18.00	-25.35%
110.2010.5132.000	CLOTHING EXPENSE	11,960.05	9,500.00	6,965.70	12,000.00	9,500.00	-2,500.00	-20.83%
110.2010.5151.000	PHYSICALS/IMMUNIZATIONS	0.00	1,000.00	0.00	1,000.00	1,000.00	0.00	0.00%
110.2010.5210.000	ADVERTISING & LEGAL PUB	0.00	0.00	15.00	15.00	0.00	-15.00	-100.00%

Budget Comparison Report

Account Number		2021-2022 Total Activity	2022-2023 Total Budget	2022-2023 YTD Activity Through Feb	Parent Budget 2022-2023 FY2023 Amend	Comparison 1 Budget 2023-2024 FY2024 Dept Request	Comparison 1 to Parent Budget Increase / (Decrease)	%
110.2010.5230.000	CONSULTING & PROF FEES	31,022.00	35,000.00	2,117.50	7,200.00	5,000.00	-2,200.00	-30.56%
110.2010.5231.000	ACCOUNTING FEES	0.00	18,256.00	12,170.80	18,256.00	19,100.00	844.00	4.62%
110.2010.5233.000	ENGINEERING FEES	720.00	1,000.00	0.00	1,000.00	1,000.00	0.00	0.00%
110.2010.5234.000	LEGAL EXP	0.00	0.00	832.50	2,000.00	2,000.00	0.00	0.00%
110.2010.5251.000	LICENSE & PERMITS	1,495.00	250.00	178.50	250.00	250.00	0.00	0.00%
110.2010.5280.000	DUES, MEMBER, SUBSCRIPTN	0.00	0.00	277.50	300.00	300.00	0.00	0.00%
110.2010.5290.000	INSURANCE - GENERAL	0.00	372.00	-138.00	0.00	0.00	0.00	0.00%
110.2010.5342.000	CONTRACT-OUTSIDE HELP	170,533.12	75,000.00	296,916.02	419,524.00	75,000.00	-344,524.00	-82.12%
110.2010.5344.000	CONTRACT-MAINTENANCE	1,822.00	3,500.00	1,522.02	3,500.00	3,500.00	0.00	0.00%
110.2010.5347.000	CONTRACT-SOFTWARE MAINT	2,753.98	3,000.00	2,981.53	3,150.00	3,150.00	0.00	0.00%
110.2010.5352.000	CONTRACT-TREE REMOVAL	63,820.00	120,000.00	2,700.00	120,000.00	40,000.00	-80,000.00	-66.67%
110.2010.5359.000	TOWING SERVICES	1,540.00	3,500.00	0.00	3,500.00	3,500.00	0.00	0.00%
110.2010.5360.000	POSTAGE & SHIPPING	66.42	100.00	0.00	100.00	100.00	0.00	0.00%
110.2010.5380.000	RENTS & LEASES	1,607.71	800.00	672.73	1,200.00	1,200.00	0.00	0.00%
110.2010.5386.000	CONTRACT LAWN CARE	9,836.00	13,000.00	7,766.00	13,000.00	12,500.00	-500.00	-3.85%
110.2010.5410.000	REPAIRS & MAINTENANCE	13,929.34	10,000.00	7,049.11	11,000.00	12,000.00	1,000.00	9.09%
110.2010.5450.000	TELEPHONE/OTHR COMMNCT	2,158.12	2,500.00	1,796.73	2,500.00	2,500.00	0.00	0.00%
110.2010.5460.000	CONFERENCE EXPENSE	525.00	4,500.00	0.00	1,500.00	1,500.00	0.00	0.00%
110.2010.5470.000	TRAINING	20.00	0.00	0.00	0.00	0.00	0.00	0.00%
110.2010.5481.000	ELECTRICITY	11,888.12	12,000.00	8,663.29	13,000.00	13,500.00	500.00	3.85%
110.2010.5482.000	NATURAL GAS	7,347.99	9,000.00	5,483.07	9,000.00	9,000.00	0.00	0.00%
110.2010.5489.000	SAFETY EQUIP/SUPPLIES	383.39	1,000.00	1,539.34	2,000.00	1,500.00	-500.00	-25.00%
110.2010.5565.000	VEHICLE OPER/MAINT SPPLY	56,656.29	75,000.00	35,032.52	75,000.00	75,000.00	0.00	0.00%
110.2010.5570.000	VEHICLE GAS	12,460.67	10,000.00	9,264.49	17,000.00	17,000.00	0.00	0.00%
110.2010.5571.000	VEHICLE DIESEL FUEL	20,650.54	30,000.00	25,669.08	40,000.00	40,000.00	0.00	0.00%
110.2010.5600.000	OPERATING SUPPLIES	56,087.05	46,000.00	39,744.00	58,000.00	60,000.00	2,000.00	3.45%
110.2010.5605.000	OFFICE SUPPLIES	48.90	500.00	0.00	500.00	500.00	0.00	0.00%
110.2010.5611.000	BLDG,GRD OPER/MAINT SPLY	21,553.09	25,000.00	4,866.01	25,000.00	25,000.00	0.00	0.00%
110.2010.5612.000	COMPUTER COMPONENTS	854.34	1,000.00	0.00	1,000.00	1,000.00	0.00	0.00%
110.2010.5617.000	RM-OTHER	13,917.37	10,000.00	20,107.21	33,000.00	25,000.00	-8,000.00	-24.24%
110.2010.5618.000	RM-COLDMIX	31,890.08	30,000.00	9,493.08	30,000.00	30,000.00	0.00	0.00%
110.2010.5619.000	RM-HOTMIX	17,793.36	30,000.00	0.00	25,000.00	25,000.00	0.00	0.00%
110.2010.5620.000	RM-CRUSHED ROCK	41,869.67	15,000.00	17,812.51	40,000.00	40,000.00	0.00	0.00%
110.2010.5621.000	SR-SAND	624.18	200.00	0.00	200.00	200.00	0.00	0.00%
110.2010.5626.000	TS-SIGNS, POSTS & SPPLYS	12,487.98	20,000.00	12,412.17	20,000.00	20,000.00	0.00	0.00%
110.2010.5627.000	TS-BARRICADES, SUPPLIES	9,952.98	7,000.00	1,300.12	7,000.00	7,000.00	0.00	0.00%
110.2010.5628.000	TS-PAVEMENT MARKING	55,944.44	30,000.00	355.70	45,000.00	45,000.00	0.00	0.00%
110.2010.5703.000	MINOR COMPUTER	484.99	1,000.00	26.00	7,500.00	2,000.00	-5,500.00	-73.33%
110.2010.5704.000	MINOR SOFTWARE <$5,000	713.42	750.00	0.00	750.00	750.00	0.00	0.00%

Budget Comparison Report

Account Number		2021-2022 Total Activity	2022-2023 Total Budget	2022-2023 YTD Activity Through Feb	Parent Budget 2022-2023 FY2023 Amend	Comparison 1 Budget 2023-2024 FY2024 Dept Request	Comparison 1 to Parent Budget Increase / (Decrease)	%
110.2010.5718.000	MINOR EQUIP, UNCLASSFIED	43,586.32	35,000.00	21,589.34	35,000.00	35,000.00	0.00	0.00%
110.2010.5750.000	OTHER CAP EQUIP > $5,000	478,136.80	795,000.00	540,637.16	552,487.00	449,588.00	-102,899.00	-18.62%
110.2010.5776.000	BUILDINGS & IMPROVEMENTS	173.16	0.00	0.00	0.00	65,000.00	65,000.00	0.00%
	Total Expense:	**1,224,075.74**	**1,504,104.00**	**1,108,743.22**	**1,675,822.00**	**1,197,933.00**	**-477,889.00**	**-28.52%**
	Total Function: 2010 - Roads, Bridges, Sidewalks:	**2,589,761.16**	**1,985,896.00**	**1,462,037.62**	**1,849,278.00**	**2,292,367.00**	**443,089.00**	**23.96%**
Function: 2011 - Sidewalks								
Expense								
110.2011.5342.000	CONTRACT OUTSIDE HELP	78,636.21	0.00	10,712.22	10,712.00	0.00	-10,712.00	-100.00%
110.2011.5351.000	CONTRACT-CONCRETE REPAIR	0.00	0.00	0.00	0.00	0.00	0.00	0.00%
	Total Expense:	**78,636.21**	**0.00**	**10,712.22**	**10,712.00**	**0.00**	**-10,712.00**	**-100.00%**
	Total Function: 2011 - Sidewalks:	**78,636.21**	**0.00**	**10,712.22**	**10,712.00**	**0.00**	**-10,712.00**	**-100.00%**
Function: 2012 - Street Construction								
Expense								
110.2012.5233.000	ENGINEERING FEES	61,086.36	0.00	0.00	0.00	0.00	0.00	0.00%
110.2012.5331.000	PAYMENTS-OTHER ENTITIES	0.00	383,500.00	0.00	240,650.00	383,500.00	142,850.00	59.36%
110.2012.5348.000	CONTRACT-OTHER	0.00	428,520.00	0.00	0.00	0.00	0.00	0.00%
110.2012.5349.000	CONTRACT-BRIDGE & CULVRT	13,592.27	0.00	0.00	0.00	0.00	0.00	0.00%
110.2012.5600.000	OPERATING SUPPLIES	415.69	0.00	0.00	0.00	0.00	0.00	0.00%
	Total Expense:	**75,094.32**	**812,020.00**	**0.00**	**240,650.00**	**383,500.00**	**142,850.00**	**59.36%**
	Total Function: 2012 - Street Construction:	**75,094.32**	**812,020.00**	**0.00**	**240,650.00**	**383,500.00**	**142,850.00**	**59.36%**
Function: 2030 - Street Lighting								
Revenue								
110.2030.4875.000	RFNDS/REIMB	515.23	0.00	182.30	250.00	0.00	-250.00	-100.00%
	Total Revenue:	**515.23**	**0.00**	**182.30**	**250.00**	**0.00**	**-250.00**	**-100.00%**
Expense								
110.2030.5151.000	Physicals/Immunizations	0.00	0.00	82.79	83.00	0.00	-83.00	-100.00%
110.2030.5210.000	ADVERTISING & LEGAL PUB	0.00	0.00	5.33	6.00	0.00	-6.00	-100.00%
110.2030.5216.000	BACKGROUND CHECKS	9.00	0.00	3.00	3.00	0.00	-3.00	-100.00%
110.2030.5342.000	CONTRACT-OUTSIDE HELP	6,104.40	2,000.00	1,426.99	2,000.00	2,000.00	0.00	0.00%
110.2030.5410.000	REPAIRS AND MAINTENANCE	0.00	0.00	202.56	150.00	1,000.00	850.00	566.67%
110.2030.5481.000	ELECTRICITY	240,641.86	230,000.00	165,630.03	250,000.00	260,000.00	10,000.00	4.00%
110.2030.5600.000	OPERATING SUPPLIES	312.26	3,000.00	72.83	2,000.00	2,500.00	500.00	25.00%
110.2030.5718.000	MINOR EQUIP, UNCLASSFIED	77.42	0.00	151.65	300.00	300.00	0.00	0.00%
	Total Expense:	**247,144.94**	**235,000.00**	**167,575.18**	**254,542.00**	**265,800.00**	**11,258.00**	**4.42%**
	Total Function: 2030 - Street Lighting:	**-246,629.71**	**-235,000.00**	**-167,392.88**	**-254,292.00**	**-265,800.00**	**-11,508.00**	**4.53%**

Budget Comparison Report

Account Number		2021-2022 Total Activity	2022-2023 Total Budget	2022-2023 YTD Activity Through Feb	Parent Budget 2022-2023 FY2023 Amend	Comparison 1 Budget 2023-2024 FY2024 Dept Request	Comparison 1 to Parent Budget Increase / (Decrease)	%
Function: 2040 - Traffic Safety								
Revenue								
110.2040.4875.000	RFNDS/REIMB	519.90	0.00	3,704.27	56.00	0.00	-56.00	-100.00%
110.2040.4960.000	SALE OF FA	0.00	0.00	400.00	0.00	0.00	0.00	0.00%
	Total Revenue:	**519.90**	**0.00**	**4,104.27**	**56.00**	**0.00**	**-56.00**	**-100.00%**
Expense								
110.2040.5132.000	CLOTHING EXPENSE	2,877.03	3,000.00	1,082.00	3,000.00	3,000.00	0.00	0.00%
110.2040.5151.000	PHYSICALS/IMMUNIZATIONS	0.00	0.00	514.68	515.00	0.00	-515.00	-100.00%
110.2040.5210.000	ADVERTISING & LEGAL PUB	165.90	0.00	16.99	17.00	0.00	-17.00	-100.00%
110.2040.5216.000	BACKGROUND CHECKS	24.00	0.00	18.00	18.00	0.00	-18.00	-100.00%
110.2040.5230.000	CONSULTING & PROF FEES	634.60	500.00	405.50	500.00	500.00	0.00	0.00%
110.2040.5233.000	ENGINEERING FEES	0.00	0.00	0.00	0.00	15,000.00	15,000.00	0.00%
110.2040.5251.000	LICENSE & PERMITS	12.00	100.00	454.30	455.00	100.00	-355.00	-78.02%
110.2040.5280.000	DUES, MEMBER, SUBSCRIPTN	336.00	0.00	277.50	278.00	0.00	-278.00	-100.00%
110.2040.5342.000	CONTRACT-OUTSIDE HELP	881.90	1,500.00	0.00	1,500.00	15,000.00	13,500.00	900.00%
110.2040.5344.000	CONTRACT-MAINTENANCE	4,800.00	7,000.00	0.00	5,000.00	5,000.00	0.00	0.00%
110.2040.5347.000	CONTRACT-CMPTR TECH SPPR	0.00	0.00	0.00	0.00	0.00	0.00	0.00%
110.2040.5360.000	POSTAGE & SHIPPING	0.00	10.00	0.00	10.00	10.00	0.00	0.00%
110.2040.5410.000	REPAIRS & MAINTENANCE	132.50	1,500.00	3,747.92	4,000.00	1,500.00	-2,500.00	-62.50%
110.2040.5450.000	TELEPHONE/OTHR COMMNCT	2,028.13	2,300.00	1,332.32	2,300.00	2,300.00	0.00	0.00%
110.2040.5460.000	CONFERENCE EXPENSE	275.00	250.00	0.00	275.00	275.00	0.00	0.00%
110.2040.5481.000	ELECTRICITY	13,676.01	18,000.00	9,769.90	18,000.00	18,000.00	0.00	0.00%
110.2040.5482.000	NATURAL GAS	338.78	600.00	0.00	600.00	600.00	0.00	0.00%
110.2040.5565.000	VEHICLE OPER/MAINT SPPLY	2,409.69	3,000.00	3,402.36	3,000.00	3,000.00	0.00	0.00%
110.2040.5570.000	VEHICLE GAS	3,805.82	3,500.00	1,758.80	3,500.00	3,500.00	0.00	0.00%
110.2040.5571.000	VEHICLE DIESEL FUEL	92.83	400.00	0.00	400.00	400.00	0.00	0.00%
110.2040.5600.000	OPERATING SUPPLIES	1,888.08	5,000.00	823.25	5,000.00	5,000.00	0.00	0.00%
110.2040.5605.000	OFFICE SUPPLIES	49.75	100.00	60.24	100.00	100.00	0.00	0.00%
110.2040.5702.000	MINOR OFFICE FURN/EQUIP	40.00	0.00	0.00	0.00	0.00	0.00	0.00%
110.2040.5703.000	MINOR COMPUTER	84.00	0.00	0.00	2,000.00	2,000.00	0.00	0.00%
110.2040.5704.000	MINOR SOFTWARE <$5,000	0.00	0.00	137.44	150.00	150.00	0.00	0.00%
110.2040.5718.000	MINOR EQUIP, UNCLASSFIED	12,282.10	10,000.00	128.22	10,000.00	10,000.00	0.00	0.00%
110.2040.5750.000	OTHER CAP EQUIP > $5,000	9,500.00	32,000.00	0.00	14,000.00	15,000.00	1,000.00	7.14%
110.2040.5780.000	TRAFFIC SIGNALS	0.00	0.00	3,634.00	5,000.00	5,000.00	0.00	0.00%
	Total Expense:	**56,334.12**	**88,760.00**	**27,563.42**	**79,618.00**	**105,435.00**	**25,817.00**	**32.43%**
	Total Function: 2040 - Traffic Safety:	**-55,814.22**	**-88,760.00**	**-23,459.15**	**-79,562.00**	**-105,435.00**	**-25,873.00**	**32.52%**

Budget Comparison Report

Account Number		2021-2022 Total Activity	2022-2023 Total Budget	2022-2023 YTD Activity Through Feb	Parent Budget 2022-2023 FY2023 Amend	Comparison 1 Budget 2023-2024 FY2024 Dept Request	Comparison 1 to Parent Budget Increase / (Decrease)	%
Function: 2050 - Snow Removal								
Revenue								
110.2050.4875.000	RFNDS/REIMB	861.90	0.00	0.00	0.00	0.00	0.00	0.00%
	Total Revenue:	**861.90**	**0.00**	**0.00**	**0.00**	**0.00**	**0.00**	**0.00%**
Expense								
110.2050.5342.000	CONTRACT-OUTSIDE HELP	0.00	8,000.00	0.00	0.00	0.00	0.00	0.00%
110.2050.5344.000	CONTRACT-MAINTENANCE	4,500.00	4,500.00	3,334.94	4,500.00	4,500.00	0.00	0.00%
110.2050.5380.000	RENTS & LEASES	9,980.00	0.00	2,857.75	3,000.00	4,000.00	1,000.00	33.33%
110.2050.5410.000	REPAIRS & MAINTENANCE	165.00	1,000.00	909.51	2,000.00	1,000.00	-1,000.00	-50.00%
110.2050.5565.000	VEHICLE OPER/MAINT SPPLY	23,931.62	13,000.00	11,350.35	13,000.00	13,000.00	0.00	0.00%
110.2050.5570.000	VEHICLE GAS	450.76	4,000.00	438.30	4,000.00	4,000.00	0.00	0.00%
110.2050.5571.000	VEHICLE DIESEL FUEL	10,365.50	25,000.00	15,634.76	25,000.00	25,000.00	0.00	0.00%
110.2050.5600.000	OPERATING SUPPLIES	5,009.92	5,000.00	11,221.79	10,000.00	6,000.00	-4,000.00	-40.00%
110.2050.5622.000	SR-SODIUM CHLORIDE	149,050.95	150,000.00	148,464.58	148,465.00	155,000.00	6,535.00	4.40%
110.2050.5623.000	SR-CALCIUM CHLORIDE	0.00	5,000.00	0.00	5,000.00	5,000.00	0.00	0.00%
110.2050.5625.000	SR-ANTI ICING-NEW STRTS	0.00	5,000.00	0.00	5,000.00	5,000.00	0.00	0.00%
110.2050.5718.000	MINOR EQUIP, UNCLASSFIED	0.00	0.00	526.59	1,000.00	1,000.00	0.00	0.00%
110.2050.5750.000	OTHER CAP EQUIP > $5,000	0.00	0.00	5,500.00	5,500.00	50,000.00	44,500.00	809.09%
	Total Expense:	**203,453.75**	**220,500.00**	**200,238.57**	**226,465.00**	**273,500.00**	**47,035.00**	**20.77%**
	Total Function: 2050 - Snow Removal:	**-202,591.85**	**-220,500.00**	**-200,238.57**	**-226,465.00**	**-273,500.00**	**-47,035.00**	**20.77%**
Function: 2060 - Highway Engineering								
Revenue								
110.2060.4875.000	RFNDS/REIMB	0.00	0.00	3,520.00	3,520.00	0.00	-3,520.00	-100.00%
110.2060.4960.000	SALE OF F.A.-ENGINEERING	0.00	0.00	14,551.45	14,551.00	0.00	-14,551.00	-100.00%
	Total Revenue:	**0.00**	**0.00**	**18,071.45**	**18,071.00**	**0.00**	**-18,071.00**	**-100.00%**
Expense								
110.2060.5132.000	CLOTHING EXPENSE	0.00	200.00	0.00	200.00	200.00	0.00	0.00%
110.2060.5151.000	PHYSICALS/IMMUNIZATIONS	0.00	100.00	0.00	100.00	100.00	0.00	0.00%
110.2060.5210.000	ADVERTISING & LEGAL PUB	368.07	600.00	129.08	600.00	600.00	0.00	0.00%
110.2060.5230.000	CONSULTING & PROF FEES	21,740.00	30,000.00	10,655.00	50,000.00	50,000.00	0.00	0.00%
110.2060.5233.000	ENGINEERING FEES	630.00	8,000.00	0.00	8,000.00	8,000.00	0.00	0.00%
110.2060.5251.000	LICENSE & PERMITS	62.90	300.00	100.00	300.00	300.00	0.00	0.00%
110.2060.5280.000	DUES, MEMBER, SUBSCRIPTN	4,540.00	2,500.00	830.00	2,500.00	2,500.00	0.00	0.00%
110.2060.5344.000	CONTRACT-MAINTENANCE	95.85	1,000.00	1,113.90	1,500.00	1,500.00	0.00	0.00%
110.2060.5347.000	CONTRACT-SOFTWARE MAINT	19,716.98	20,300.00	3,419.60	5,500.00	5,500.00	0.00	0.00%
110.2060.5351.000	CONTRACT-CONCRETE REPAIR	1,900.00	2,000.00	0.00	0.00	0.00	0.00	0.00%
110.2060.5360.000	POSTAGE & SHIPPING	49.78	250.00	0.00	250.00	250.00	0.00	0.00%
110.2060.5410.000	REPAIRS & MAINTENANCE	1,017.00	2,000.00	0.00	2,000.00	2,000.00	0.00	0.00%

Budget Comparison Report

Account Number		2021-2022 Total Activity	2022-2023 Total Budget	2022-2023 YTD Activity Through Feb	Parent Budget 2022-2023 FY2023 Amend	Comparison 1 Budget 2023-2024 FY2024 Dept Request	Comparison 1 to Parent Budget Increase / (Decrease)	%
110.2060.5450.000	TELEPHONE/OTHR COMMNCT	5,883.21	8,900.00	1,964.45	4,500.00	5,000.00	500.00	11.11%
110.2060.5460.000	CONFERENCE EXPENSE	0.00	7,500.00	275.00	500.00	4,500.00	4,000.00	800.00%
110.2060.5462.000	TRAVEL - OTHER	10.00	250.00	0.00	250.00	250.00	0.00	0.00%
110.2060.5465.000	TRAVEL - HOTEL/MOTEL	221.76	500.00	0.00	500.00	500.00	0.00	0.00%
110.2060.5471.000	TRAINING	480.00	0.00	300.00	1,000.00	0.00	-1,000.00	-100.00%
110.2060.5472.000	MILEAGE REIMBURSE	141.96	0.00	0.00	0.00	0.00	0.00	0.00%
110.2060.5485.000	STORM WATER FEES	3,180.53	4,500.00	3,180.53	3,600.00	3,600.00	0.00	0.00%
110.2060.5565.000	VEHICLE OPER/MAINT SPPLY	1,029.24	2,000.00	434.84	2,000.00	2,000.00	0.00	0.00%
110.2060.5570.000	VEHICLE GAS	3,718.68	4,000.00	3,043.30	5,500.00	5,500.00	0.00	0.00%
110.2060.5600.000	OPERATING SUPPLIES	449.75	3,000.00	332.79	3,000.00	3,000.00	0.00	0.00%
110.2060.5605.000	OFFICE SUPPLIES	556.65	500.00	421.38	500.00	500.00	0.00	0.00%
110.2060.5612.000	COMPUTER COMPONENTS	55.00	1,500.00	0.00	1,500.00	1,500.00	0.00	0.00%
110.2060.5685.000	SURVEY SUPPLIES	139.48	1,500.00	12.99	1,500.00	1,500.00	0.00	0.00%
110.2060.5702.000	MINOR OFFICE FURN/EQUIP	0.00	2,000.00	0.00	2,000.00	2,000.00	0.00	0.00%
110.2060.5703.000	MINOR COMPUTER	51.39	9,000.00	211.95	14,000.00	2,000.00	-12,000.00	-85.71%
110.2060.5704.000	MINOR SOFTWARE <$5,000	198.00	2,000.00	1,299.00	2,000.00	2,000.00	0.00	0.00%
110.2060.5718.000	MINOR EQUIP, UNCLASSFIED	127.52	5,000.00	491.91	5,000.00	5,000.00	0.00	0.00%
110.2060.5740.000	COMPUTER EQUIP > $5,000	0.00	0.00	0.00	0.00	6,500.00	6,500.00	0.00%
110.2060.5741.000	COMPUTER SOFTWARE > 5,00	0.00	6,000.00	12,889.12	12,889.00	0.00	-12,889.00	-100.00%
110.2060.5750.000	OTHER CAP EQUIP > $5,000	34,752.04	16,000.00	0.00	0.00	20,000.00	20,000.00	0.00%
	Total Expense:	**101,115.79**	**141,400.00**	**41,104.84**	**131,189.00**	**136,300.00**	**5,111.00**	**3.90%**
	Total Function: 2060 - Highway Engineering:	**-101,115.79**	**-141,400.00**	**-23,033.39**	**-113,118.00**	**-136,300.00**	**-23,182.00**	**20.49%**
Function: 2070 - Street Cleaning								
Expense								
110.2070.5410.000	REPAIRS & MAINTENANCE	0.00	0.00	146.00	500.00	0.00	-500.00	-100.00%
110.2070.5565.000	VEHICLE OPER/MAINT SPPLY	5,785.23	5,000.00	2,074.36	4,500.00	5,000.00	500.00	11.11%
110.2070.5571.000	VEHICLE DIESEL FUEL	5,766.66	4,500.00	4,617.96	9,000.00	9,000.00	0.00	0.00%
110.2070.5600.000	OPERATING SUPPLIES	0.00	2,500.00	2,672.00	2,672.00	2,500.00	-172.00	-6.44%
	Total Expense:	**11,551.89**	**12,000.00**	**9,510.32**	**16,672.00**	**16,500.00**	**-172.00**	**-1.03%**
	Total Function: 2070 - Street Cleaning:	**11,551.89**	**12,000.00**	**9,510.32**	**16,672.00**	**16,500.00**	**-172.00**	**-1.03%**
Function: 6021 - Finance								
Revenue								
110.6021.4610.000	INTEREST ON INVESTMENTS	0.00	0.00	72,130.54	100,000.00	90,000.00	-10,000.00	-10.00%
	Total Revenue:	**0.00**	**0.00**	**72,130.54**	**100,000.00**	**90,000.00**	**-10,000.00**	**-10.00%**
	Total Function: 6021 - Finance:	**0.00**	**0.00**	**72,130.54**	**100,000.00**	**90,000.00**	**-10,000.00**	**-10.00%**

Budget Comparison Report

Account Number		2021-2022 Total Activity	2022-2023 Total Budget	2022-2023 YTD Activity Through Feb	Parent Budget 2022-2023 FY2023 Amend	Comparison 1 Budget 2023-2024 FY2024 Dept Request	Comparison 1 to Parent Budget Increase / (Decrease)	%
Function: 9000 - 9000								
Revenue								
110.9000.6500.001	TRANSFER IN - GF	0.00	0.00	2,231.36	2,232.00	0.00	-2,232.00	-100.00%
110.9000.6500.030	TRANSFER IN - FUND 145 RUT	0.00	0.00	0.00	0.00	8,100.00	8,100.00	0.00%
110.9000.6500.145	TRANSFER IN - FUND 145	0.00	0.00	0.00	0.00	141,000.00	141,000.00	0.00%
110.9000.6500.360	TRANSFER IN - FUND 360	0.00	0.00	244,285.24	245,729.00	0.00	-245,729.00	-100.00%
110.9000.6500.363	TRANSFER IN - FUND 363 BON	0.00	0.00	0.00	352,323.00	0.00	-352,323.00	-100.00%
	Total Revenue:	**0.00**	**0.00**	**246,516.60**	**600,284.00**	**149,100.00**	**-451,184.00**	**-75.16%**
Expense								
110.9000.7500.001	TRANSFER OUT - GENERAL	1,116,774.01	1,211,244.00	577,154.24	1,161,940.00	1,176,363.00	14,423.00	1.24%
110.9000.7500.132	TRANSFER OUT - GRANT STATI	0.00	0.00	0.00	0.00	0.00	0.00	0.00%
110.9000.7500.311	TRANSFER OUT - FUND 311 RIS	0.00	0.00	0.00	104,620.00	0.00	-104,620.00	-100.00%
110.9000.7500.362	TRANSFER OUT - FUND 362	0.00	375,223.00	0.00	0.00	642,803.00	642,803.00	0.00%
110.9000.7500.395	TRANSFER OUT - FUND 395	0.00	428,520.00	0.00	149,881.00	0.00	-149,881.00	-100.00%
	Total Expense:	**1,116,774.01**	**2,014,987.00**	**577,154.24**	**1,416,441.00**	**1,819,166.00**	**402,725.00**	**28.43%**
	Total Function: 9000 - 9000:	**-1,116,774.01**	**-2,014,987.00**	**-330,637.64**	**-816,157.00**	**-1,670,066.00**	**-853,909.00**	**104.63%**
	Total Fund: 110 - ROAD USE TAX:	**701,553.16**	**-1,538,771.00**	**769,183.99**	**191,650.00**	**-468,734.00**	**-660,384.00**	**-344.58%**
Fund: 112 - EMPLOYEE BENEFITS FUND								
Function: 6021 - Finance								
Revenue								
112.6021.4010.000	PROPERTY TAXES-CURRENT	2,308,587.95	2,674,253.00	1,425,712.14	2,674,253.00	1,980,772.00	-693,481.00	-25.93%
112.6021.4011.000	DELIQUENT PROPERTY TAXES	8,693.18	0.00	1,678.20	0.00	0.00	0.00	0.00%
112.6021.4110.000	UTILITY EXCISE TAX	279,638.78	258,239.00	139,291.00	258,239.00	242,432.00	-15,807.00	-6.12%
112.6021.4150.000	CURRENT MOBILE HOME TAXE	2,331.59	0.00	1,667.67	0.00	0.00	0.00	0.00%
112.6021.4151.000	DELIQ MOBILE HOME TAXES	137.30	0.00	186.64	0.00	0.00	0.00	0.00%
112.6021.4332.000	AGED INCOME CREDIT	2,604.62	0.00	2,300.78	0.00	0.00	0.00	0.00%
112.6021.4333.000	DISABLED HOMESTEAD CREDI	8,002.40	0.00	3,903.58	0.00	0.00	0.00	0.00%
112.6021.4335.000	HOMESTEAD CREDIT	84,182.16	0.00	43,002.31	0.00	0.00	0.00	0.00%
112.6021.4336.000	MILITARY CREDIT	954.88	0.00	927.35	0.00	0.00	0.00	0.00%
112.6021.4337.000	MOBILE HOME CREDIT	0.00	0.00	5.61	0.00	0.00	0.00	0.00%
112.6021.4338.000	BUSINESS PROP TAX CREDIT	79,160.70	0.00	42,620.41	0.00	62,780.00	62,780.00	0.00%
112.6021.4339.000	SF295 BACKFILL	75,740.81	69,131.00	34,523.14	69,131.00	44,237.00	-24,894.00	-36.01%
	Total Revenue:	**2,850,034.37**	**3,001,623.00**	**1,695,818.83**	**3,001,623.00**	**2,330,221.00**	**-671,402.00**	**-22.37%**
	Total Function: 6021 - Finance:	**2,850,034.37**	**3,001,623.00**	**1,695,818.83**	**3,001,623.00**	**2,330,221.00**	**-671,402.00**	**-22.37%**

Account Number		2021-2022 Total Activity	2022-2023 Total Budget	2022-2023 YTD Activity Through Feb	Parent Budget 2022-2023 FY2023 Amend	Comparison 1 Budget 2023-2024 FY2024 Dept Request	Comparison 1 to Parent Budget Increase / (Decrease)	%
Function: 9000 - 9000								
Expense								
112.9000.7500.001	TRANSFER OUT - GENERAL	2,608,912.25	2,935,235.00	1,323,503.77	2,898,190.00	3,070,871.00	172,681.00	5.96%
	Total Expense:	**2,608,912.25**	**2,935,235.00**	**1,323,503.77**	**2,898,190.00**	**3,070,871.00**	**172,681.00**	**5.96%**
	Total Function: 9000 - 9000:	**2,608,912.25**	**2,935,235.00**	**1,323,503.77**	**2,898,190.00**	**3,070,871.00**	**172,681.00**	**5.96%**
	Total Fund: 112 - EMPLOYEE BENEFITS FUND:	**241,122.12**	**66,388.00**	**372,315.06**	**103,433.00**	**-740,650.00**	**-844,083.00**	**-816.07%**
Fund: 117 - POLICE/FIRE RETIREMENT								
Function: 1010 - Police Operations/Crime Prevention								
Expense								
117.1010.5114.000	CITY SHARE PENSION	7,012.88	10,900.00	0.00	0.00	0.00	0.00	0.00%
	Total Expense:	**7,012.88**	**10,900.00**	**0.00**	**0.00**	**0.00**	**0.00**	**0.00%**
	Total Function: 1010 - Police Operations/Crime Prevention:	**7,012.88**	**10,900.00**	**0.00**	**0.00**	**0.00**	**0.00**	**0.00%**
Function: 6021 - Finance								
Revenue								
117.6021.4010.000	PROPERTY TAXES-CURRENT	1,036,187.64	1,095,799.00	583,232.76	1,095,799.00	840,503.00	-255,296.00	-23.30%
117.6021.4011.000	DELIQUENT PROPERTY TAXES	3,643.45	0.00	688.22	0.00	0.00	0.00	0.00%
117.6021.4110.000	UTILITY EXCISE TAX	125,634.82	105,819.00	56,893.51	105,819.00	102,875.00	-2,944.00	-2.78%
117.6021.4150.000	CURRENT MOBILE HOME TAXE	1,042.36	0.00	683.97	0.00	0.00	0.00	0.00%
117.6021.4151.000	DELIQ MOBILE HOME TAXES	60.11	0.00	77.00	0.00	0.00	0.00	0.00%
117.6021.4332.000	AGED INCOME CREDIT	1,085.72	0.00	1,033.69	0.00	0.00	0.00	0.00%
117.6021.4333.000	DISABLED HOMESTEAD CREDI	3,595.28	0.00	1,594.42	0.00	0.00	0.00	0.00%
117.6021.4335.000	HOMESTEAD CREDIT	37,820.97	0.00	17,564.32	0.00	0.00	0.00	0.00%
117.6021.4336.000	MILITARY CREDIT	429.00	0.00	378.78	0.00	0.00	0.00	0.00%
117.6021.4337.000	MOBILE HOME CREDIT	0.00	0.00	2.29	0.00	0.00	0.00	0.00%
117.6021.4338.000	BUSINESS PROP TAX CREDIT	35,564.94	0.00	17,408.34	0.00	26,639.00	26,639.00	0.00%
117.6021.4339.000	SF295 BACKFILL	34,028.48	28,327.00	14,146.20	28,327.00	18,771.00	-9,556.00	-33.73%
117.6021.4610.000	INTEREST ON INVESTMENTS	5,783.57	5,000.00	7,073.63	5,000.00	5,000.00	0.00	0.00%
	Total Revenue:	**1,284,876.34**	**1,234,945.00**	**700,777.13**	**1,234,945.00**	**993,788.00**	**-241,157.00**	**-19.53%**
	Total Function: 6021 - Finance:	**1,284,876.34**	**1,234,945.00**	**700,777.13**	**1,234,945.00**	**993,788.00**	**-241,157.00**	**-19.53%**
Function: 9000 - 9000								
Expense								
117.9000.7500.001	TR TO GENERAL	1,237,682.69	1,200,148.00	560,984.78	1,151,802.00	1,180,148.00	28,346.00	2.46%
	Total Expense:	**1,237,682.69**	**1,200,148.00**	**560,984.78**	**1,151,802.00**	**1,180,148.00**	**28,346.00**	**2.46%**
	Total Function: 9000 - 9000:	**1,237,682.69**	**1,200,148.00**	**560,984.78**	**1,151,802.00**	**1,180,148.00**	**28,346.00**	**2.46%**
	Total Fund: 117 - POLICE/FIRE RETIREMENT:	**40,180.77**	**23,897.00**	**139,792.35**	**83,143.00**	**-186,360.00**	**-269,503.00**	**-324.14%**

Budget Comparison Report

Account Number		2021-2022 Total Activity	2022-2023 Total Budget	2022-2023 YTD Activity Through Feb	Parent Budget 2022-2023 FY2023 Amend	Comparison 1 Budget 2023-2024 FY2024 Dept Request	Comparison 1 to Parent Budget Increase / (Decrease)	%
Fund: 119 - EMERGENCY FUND								
Function: 6021 - Finance								
Revenue								
119.6021.4010.000	PROPERTY TAXES-CURRENT	203,589.22	227,998.00	121,505.18	227,998.00	223,538.00	-4,460.00	-1.96%
119.6021.4011.000	DELIQUENT PROPERTY TAXES	766.81	0.00	146.70	0.00	0.00	0.00	0.00%
119.6021.4110.000	UTILITY EXCISE TAX	24,661.13	22,016.00	11,864.46	22,016.00	27,359.00	5,343.00	24.27%
119.6021.4150.000	CURRENT MOBILE HOME TAXE	205.65	0.00	142.27	0.00	0.00	0.00	0.00%
119.6021.4151.000	DELIQ MOBILE HOME TAXES	12.27	0.00	16.07	0.00	0.00	0.00	0.00%
119.6021.4332.000	AGED INCOME CREDIT	229.38	0.00	202.91	0.00	0.00	0.00	0.00%
119.6021.4333.000	DISABLED HOMESTEAD CREDI	705.72	0.00	332.49	0.00	0.00	0.00	0.00%
119.6021.4335.000	HOMESTEAD CREDIT	7,423.96	0.00	3,662.83	0.00	0.00	0.00	0.00%
119.6021.4336.000	MILITARY CREDIT	84.21	0.00	78.99	0.00	0.00	0.00	0.00%
119.6021.4337.000	MOBILE HOME CREDIT	0.00	0.00	0.48	0.00	0.00	0.00	0.00%
119.6021.4338.000	BUSINESS PROP TAX CREDIT	6,981.14	0.00	3,630.32	0.00	7,085.00	7,085.00	0.00%
119.6021.4339.000	SF295 BACKFILL	6,679.56	5,894.00	2,943.32	5,894.00	4,992.00	-902.00	-15.30%
	Total Revenue:	**251,339.05**	**255,908.00**	**144,526.02**	**255,908.00**	**262,974.00**	**7,066.00**	**2.76%**
	Total Function: 6021 - Finance:	**251,339.05**	**255,908.00**	**144,526.02**	**255,908.00**	**262,974.00**	**7,066.00**	**2.76%**
Function: 9000 - 9000								
Expense								
119.9000.7500.001	TR TO GENERAL	251,339.05	255,879.00	131,473.54	255,908.00	262,974.00	7,066.00	2.76%
	Total Expense:	**251,339.05**	**255,879.00**	**131,473.54**	**255,908.00**	**262,974.00**	**7,066.00**	**2.76%**
	Total Function: 9000 - 9000:	**251,339.05**	**255,879.00**	**131,473.54**	**255,908.00**	**262,974.00**	**7,066.00**	**2.76%**
	Total Fund: 119 - EMERGENCY FUND:	**0.00**	**29.00**	**13,052.48**	**0.00**	**0.00**	**0.00**	**0.00%**
Fund: 121 - LOCAL OPTION SALES TAX								
Function: 1010 - Police Operations/Crime Prevention								
Expense								
121.1010.5230.000	CONSULTING & PROF FEES	2,500.00	0.00	2,500.00	2,500.00	0.00	-2,500.00	-100.00%
121.1010.5750.000	OTHER CAP EQUIP > $5,000	0.00	0.00	0.00	150,000.00	0.00	-150,000.00	-100.00%
	Total Expense:	**2,500.00**	**0.00**	**2,500.00**	**152,500.00**	**0.00**	**-152,500.00**	**-100.00%**
	Total Function: 1010 - Police Operations/Crime Prevention:	**2,500.00**	**0.00**	**2,500.00**	**152,500.00**	**0.00**	**-152,500.00**	**-100.00%**
Function: 1050 - Fire Department								
Expense								
121.1050.5230.000	CONSULTING & PROF FEES	2,500.00	0.00	2,500.00	2,500.00	0.00	-2,500.00	-100.00%
	Total Expense:	**2,500.00**	**0.00**	**2,500.00**	**2,500.00**	**0.00**	**-2,500.00**	**-100.00%**
	Total Function: 1050 - Fire Department:	**2,500.00**	**0.00**	**2,500.00**	**2,500.00**	**0.00**	**-2,500.00**	**-100.00%**

Budget Comparison Report

Account Number		2021-2022 Total Activity	2022-2023 Total Budget	2022-2023 YTD Activity Through Feb	Parent Budget 2022-2023 FY2023 Amend	Comparison 1 Budget 2023-2024 FY2024 Dept Request	Comparison 1 to Parent Budget Increase / (Decrease)	%
Function: 2011 - Sidewalks								
Expense								
121.2011.5331.000	PAYMENTS-OTHER ENTITIES	0.00	0.00	0.00	50,000.00	0.00	-50,000.00	-100.00%
121.2011.5980.000	REFUNDS/REIMB	0.00	0.00	0.00	0.00	0.00	0.00	0.00%
	Total Expense:	**0.00**	**0.00**	**0.00**	**50,000.00**	**0.00**	**-50,000.00**	**-100.00%**
	Total Function: 2011 - Sidewalks:	**0.00**	**0.00**	**0.00**	**50,000.00**	**0.00**	**-50,000.00**	**-100.00%**
Function: 2012 - Street Construction								
Expense								
121.2012.5718.000	MINOR EQUIPMENT	0.00	0.00	33,697.29	0.00	0.00	0.00	0.00%
	Total Expense:	**0.00**	**0.00**	**33,697.29**	**0.00**	**0.00**	**0.00**	**0.00%**
	Total Function: 2012 - Street Construction:	**0.00**	**0.00**	**33,697.29**	**0.00**	**0.00**	**0.00**	**0.00%**
Function: 2020 - Parking								
Expense								
121.2020.5342.000	CONTRACT - OUTSIDE HELP	0.00	0.00	0.00	71,500.00	0.00	-71,500.00	-100.00%
121.2020.5785.000	LAND IMPROVEMENTS	0.00	71,500.00	0.00	0.00	0.00	0.00	0.00%
	Total Expense:	**0.00**	**71,500.00**	**0.00**	**71,500.00**	**0.00**	**-71,500.00**	**-100.00%**
	Total Function: 2020 - Parking:	**0.00**	**71,500.00**	**0.00**	**71,500.00**	**0.00**	**-71,500.00**	**-100.00%**
Function: 4030 - Parks								
Expense								
121.4030.5233.000	ENGINEERING FEES	29,500.00	0.00	0.00	0.00	0.00	0.00	0.00%
121.4030.5342.000	CONTRACT-OUTSIDE HELP	0.00	0.00	0.00	336,340.00	0.00	-336,340.00	-100.00%
	Total Expense:	**29,500.00**	**0.00**	**0.00**	**336,340.00**	**0.00**	**-336,340.00**	**-100.00%**
	Total Function: 4030 - Parks:	**29,500.00**	**0.00**	**0.00**	**336,340.00**	**0.00**	**-336,340.00**	**-100.00%**
Function: 4065 - Coliseum								
Expense								
121.4065.5342.000	CONTRACT - OUTSIDE HELP	0.00	0.00	12,000.00	43,000.00	0.00	-43,000.00	-100.00%
	Total Expense:	**0.00**	**0.00**	**12,000.00**	**43,000.00**	**0.00**	**-43,000.00**	**-100.00%**
	Total Function: 4065 - Coliseum:	**0.00**	**0.00**	**12,000.00**	**43,000.00**	**0.00**	**-43,000.00**	**-100.00%**
Function: 5010 - Community Beautification								
Expense								
121.5010.5230.000	CONSULTING & PROF FEES	5,000.00	0.00	0.00	0.00	0.00	0.00	0.00%
121.5010.5331.000	PAYMENTS-OTHER ENTITIES	0.00	0.00	8,000.00	8,000.00	0.00	-8,000.00	-100.00%
121.5010.5718.000	MINOR EQUIPMENT	0.00	0.00	0.00	160,000.00	0.00	-160,000.00	-100.00%
	Total Expense:	**5,000.00**	**0.00**	**8,000.00**	**168,000.00**	**0.00**	**-168,000.00**	**-100.00%**
	Total Function: 5010 - Community Beautification:	**5,000.00**	**0.00**	**8,000.00**	**168,000.00**	**0.00**	**-168,000.00**	**-100.00%**

Budget Comparison Report

Account Number		2021-2022 Total Activity	2022-2023 Total Budget	2022-2023 YTD Activity Through Feb	Parent Budget 2022-2023 FY2023 Amend	Comparison 1 Budget 2023-2024 FY2024 Dept Request	Comparison 1 to Parent Budget Increase / (Decrease)	%
Function: 5020 - Economic Development								
Revenue								
121.5020.4960.000	SALE OF F.A.	247,700.00	0.00	0.00	0.00	0.00	0.00	0.00%
	Total Revenue:	**247,700.00**	**0.00**	**0.00**	**0.00**	**0.00**	**0.00**	**0.00%**
Expense								
121.5020.5230.000	CONSULTING & PROF FEES	0.00	0.00	14,495.00	119,995.00	0.00	-119,995.00	-100.00%
121.5020.5331.000	PAYMENTS-OTHER ENTITIES	250,000.00	0.00	0.00	0.00	95,000.00	95,000.00	0.00%
121.5020.5781.000	LAND ACQ	0.00	0.00	79,689.15	79,690.00	0.00	-79,690.00	-100.00%
121.5020.5980.000	REFUNDS/REIMB	0.00	0.00	0.00	0.00	0.00	0.00	0.00%
	Total Expense:	**250,000.00**	**0.00**	**94,184.15**	**199,685.00**	**95,000.00**	**-104,685.00**	**-52.43%**
	Total Function: 5020 - Economic Development:	**-2,300.00**	**0.00**	**-94,184.15**	**-199,685.00**	**-95,000.00**	**104,685.00**	**-52.43%**
Function: 5030 - Housing & Urban Renewal								
Expense								
121.5030.5331.000	PAYMENTS-OTHER ENTITIES	0.00	0.00	5,000.00	250,000.00	0.00	-250,000.00	-100.00%
	Total Expense:	**0.00**	**0.00**	**5,000.00**	**250,000.00**	**0.00**	**-250,000.00**	**-100.00%**
	Total Function: 5030 - Housing & Urban Renewal:	**0.00**	**0.00**	**5,000.00**	**250,000.00**	**0.00**	**-250,000.00**	**-100.00%**
Function: 5040 - Planning & Zoning								
Expense								
121.5040.5230.000	CONSULTING & PROF FEES	62,910.50	0.00	0.00	0.00	0.00	0.00	0.00%
	Total Expense:	**62,910.50**	**0.00**	**0.00**	**0.00**	**0.00**	**0.00**	**0.00%**
	Total Function: 5040 - Planning & Zoning:	**62,910.50**	**0.00**	**0.00**	**0.00**	**0.00**	**0.00**	**0.00%**
Function: 5900 - Other Community and Economic Dev.								
Expense								
121.5900.5230.000	CONSULTING & PROF FEES	24,781.00	0.00	14,950.00	15,219.00	0.00	-15,219.00	-100.00%
121.5900.5331.000	PAYMENTS-OTHER ENTITIES	115,000.00	0.00	0.00	200,000.00	0.00	-200,000.00	-100.00%
	Total Expense:	**139,781.00**	**0.00**	**14,950.00**	**215,219.00**	**0.00**	**-215,219.00**	**-100.00%**
Total Function: 5900 - Other Community and Economic Dev.:		**139,781.00**	**0.00**	**14,950.00**	**215,219.00**	**0.00**	**-215,219.00**	**-100.00%**
Function: 6011 - Council								
Expense								
121.6011.5230.000	CONSULTING AND PROF FEES	0.00	20,495.00	0.00	0.00	0.00	0.00	0.00%
121.6011.5331.000	PAYMENTS-OTHER ENTITIES	5,000.00	5,000.00	0.00	50,000.00	5,000.00	-45,000.00	-90.00%
	Total Expense:	**5,000.00**	**25,495.00**	**0.00**	**50,000.00**	**5,000.00**	**-45,000.00**	**-90.00%**
	Total Function: 6011 - Council:	**5,000.00**	**25,495.00**	**0.00**	**50,000.00**	**5,000.00**	**-45,000.00**	**-90.00%**
Function: 6021 - Finance								
Revenue								
121.6021.4170.000	LOCAL OPTION TAXES	4,655,923.28	4,200,000.00	2,617,204.00	3,700,000.00	3,700,000.00	0.00	0.00%

Account Number		2021-2022 Total Activity	2022-2023 Total Budget	2022-2023 YTD Activity Through Feb	Parent Budget 2022-2023 FY2023 Amend	Comparison 1 Budget 2023-2024 FY2024 Dept Request	Comparison 1 to Parent Budget Increase / (Decrease)	%
121.6021.4610.000	INTEREST ON INVESTMENTS	56,659.73	34,000.00	82,735.12	100,000.00	100,000.00	0.00	0.00%
	Total Revenue:	**4,712,583.01**	**4,234,000.00**	**2,699,939.12**	**3,800,000.00**	**3,800,000.00**	**0.00**	**0.00%**
	Total Function: 6021 - Finance:	**4,712,583.01**	**4,234,000.00**	**2,699,939.12**	**3,800,000.00**	**3,800,000.00**	**0.00**	**0.00%**
Function: 6025 - HR								
Expense								
121.6025.5230.000	CONSULTING & PROF FEES	0.00	0.00	0.00	23,400.00	0.00	-23,400.00	-100.00%
	Total Expense:	**0.00**	**0.00**	**0.00**	**23,400.00**	**0.00**	**-23,400.00**	**-100.00%**
	Total Function: 6025 - HR:	**0.00**	**0.00**	**0.00**	**23,400.00**	**0.00**	**-23,400.00**	**-100.00%**
Function: 6070 - Data Processing,IT								
Expense								
121.6070.5741.000	COMPUTER SOFTWARE . $5,0(	12,867.75	0.00	0.00	0.00	0.00	0.00	0.00%
	Total Expense:	**12,867.75**	**0.00**	**0.00**	**0.00**	**0.00**	**0.00**	**0.00%**
	Total Function: 6070 - Data Processing,IT:	**12,867.75**	**0.00**	**0.00**	**0.00**	**0.00**	**0.00**	**0.00%**
Function: 9000 - 9000								
Expense								
121.9000.7500.001	TR TO GENERAL	0.00	0.00	126,160.00	126,160.00	328,526.00	202,366.00	160.40%
121.9000.7500.010	TR TO CASH FLOW RESERVE	99,023.00	91,512.00	0.00	91,512.00	288,000.00	196,488.00	214.71%
121.9000.7500.132	TR TO GRANTS STATE/LOCAL	32,908.71	220,000.00	0.00	92,091.00	375,000.00	282,909.00	307.21%
121.9000.7500.149	TRANSFER OUT - FEMA WINDS	0.00	0.00	0.00	0.00	0.00	0.00	0.00%
121.9000.7500.183	TRANSFER OUT - FUND 183 ED	0.00	0.00	0.00	12,364.00	0.00	-12,364.00	-100.00%
121.9000.7500.200	TRANSFER OUT - DEBT SERV	2,879,760.00	3,641,775.00	1,494,226.76	3,641,775.00	3,333,609.00	-308,166.00	-8.46%
121.9000.7500.311	TRANSFER OUT - FUND 311	248,836.75	689,030.00	0.00	1,053,079.00	25,000.00	-1,028,079.00	-97.63%
121.9000.7500.340	TR TO BIKE PATH	0.00	0.00	0.00	56,599.00	0.00	-56,599.00	-100.00%
121.9000.7500.363	TRANSFER OUT - FUND 363 G(	0.00	0.00	0.00	128,026.00	0.00	-128,026.00	-100.00%
121.9000.7500.364	TRANSFER OUT - FUND 364 G(	0.00	0.00	0.00	100,000.00	115,250.00	15,250.00	15.25%
121.9000.7500.395	TR TO ECON DEVEL PROJECT	22,779.20	284,235.00	0.00	284,235.00	0.00	-284,235.00	-100.00%
121.9000.7500.611	TRANSSFER OUT - FUND 611	0.00	0.00	18,580.00	18,580.00	0.00	-18,580.00	-100.00%
121.9000.7500.690	TRANSFER OUT - FUND 690	0.00	0.00	8,090.00	8,090.00	0.00	-8,090.00	-100.00%
121.9000.7500.740	TRANSFER OUT - FUND 740	0.00	0.00	4,170.00	4,170.00	0.00	-4,170.00	-100.00%
	Total Expense:	**3,283,307.66**	**4,926,552.00**	**1,651,226.76**	**5,616,681.00**	**4,465,385.00**	**-1,151,296.00**	**-20.50%**
	Total Function: 9000 - 9000:	**3,283,307.66**	**4,926,552.00**	**1,651,226.76**	**5,616,681.00**	**4,465,385.00**	**-1,151,296.00**	**-20.50%**
	Total Fund: 121 - LOCAL OPTION SALES TAX:	**1,166,916.10**	**-789,547.00**	**875,880.92**	**-3,378,825.00**	**-765,385.00**	**2,613,440.00**	**-77.35%**
Fund: 125 - TAX INCREMENT FINANCING								
Function: 5020 - Economic Development								
Expense								
125.5020.5331.000	PAYMENTS-OTHER ENTITIES	203,489.20	186,090.00	76,310.59	215,212.00	628,743.00	413,531.00	192.15%

Budget Comparison Report

Account Number		2021-2022 Total Activity	2022-2023 Total Budget	2022-2023 YTD Activity Through Feb	Parent Budget 2022-2023 FY2023 Amend	Comparison 1 Budget 2023-2024 FY2024 Dept Request	Comparison 1 to Parent Budget Increase / (Decrease)	%
125.5020.5980.000	REFUNDS/REIMB	37,009.13	0.00	0.00	0.00	0.00	0.00	0.00%
	Total Expense:	**240,498.33**	**186,090.00**	**76,310.59**	**215,212.00**	**628,743.00**	**413,531.00**	**192.15%**
	Total Function: 5020 - Economic Development:	**240,498.33**	**186,090.00**	**76,310.59**	**215,212.00**	**628,743.00**	**413,531.00**	**192.15%**
Function: 6021 - Finance								
Revenue								
125.6021.4091.000	PROP TAXES, TIF REG	831,641.82	485,255.00	276,837.80	485,255.00	1,114,341.00	629,086.00	129.64%
125.6021.4093.000	PROP TAXES, TIF DELINQUENT	4,379.38	0.00	1,055.62	0.00	0.00	0.00	0.00%
125.6021.4332.000	AGED INCOME CREDIT	503.83	0.00	898.05	0.00	0.00	0.00	0.00%
125.6021.4333.000	DISABLED HOMESTEAD CREDI	222.04	0.00	137.99	0.00	0.00	0.00	0.00%
125.6021.4335.000	HOMESTEAD CREDIT	9,712.51	0.00	2,320.17	0.00	0.00	0.00	0.00%
125.6021.4338.000	BUSINESS PROP TAX CREDIT	75,663.21	0.00	16,087.84	0.00	0.00	0.00	0.00%
125.6021.4610.000	INTEREST ON INVESTMENTS	5,457.56	2,772.00	5,997.55	6,000.00	200.00	-5,800.00	-96.67%
	Total Revenue:	**927,580.35**	**488,027.00**	**303,335.02**	**491,255.00**	**1,114,541.00**	**623,286.00**	**126.88%**
	Total Function: 6021 - Finance:	**927,580.35**	**488,027.00**	**303,335.02**	**491,255.00**	**1,114,541.00**	**623,286.00**	**126.88%**
Function: 9000 - 9000								
Revenue								
125.9000.6500.001	Transfer from GF	8,601.50	0.00	0.00	0.00	0.00	0.00	0.00%
125.9000.6500.126	TRANSFER IN - FUND 126	913.11	0.00	0.00	0.00	0.00	0.00	0.00%
	Total Revenue:	**9,514.61**	**0.00**	**0.00**	**0.00**	**0.00**	**0.00**	**0.00%**
Expense								
125.9000.7500.001	TR TO GENERAL	136,401.60	188,743.00	110,749.66	372,694.00	127,915.00	-244,779.00	-65.68%
125.9000.7500.200	TR TO GO DEBT SRV	394,090.85	386,365.00	0.00	386,365.00	325,806.00	-60,559.00	-15.67%
	Total Expense:	**530,492.45**	**575,108.00**	**110,749.66**	**759,059.00**	**453,721.00**	**-305,338.00**	**-40.23%**
	Total Function: 9000 - 9000:	**-520,977.84**	**-575,108.00**	**-110,749.66**	**-759,059.00**	**-453,721.00**	**305,338.00**	**-40.23%**
	Total Fund: 125 - TAX INCREMENT FINANCING:	**166,104.18**	**-273,171.00**	**116,274.77**	**-483,016.00**	**32,077.00**	**515,093.00**	**-106.64%**
Fund: 126 - TIF-LMI								
Function: 5020 - Economic Development								
Expense								
126.5020.5980.000	REFUNDS/REIMB	27,044.99	0.00	0.00	0.00	0.00	0.00	0.00%
	Total Expense:	**27,044.99**	**0.00**	**0.00**	**0.00**	**0.00**	**0.00**	**0.00%**
	Total Function: 5020 - Economic Development:	**27,044.99**	**0.00**	**0.00**	**0.00**	**0.00**	**0.00**	**0.00%**

Budget Comparison Report

Account Number		2021-2022 Total Activity	2022-2023 Total Budget	2022-2023 YTD Activity Through Feb	Parent Budget 2022-2023 FY2023 Amend	Comparison 1 Budget 2023-2024 FY2024 Dept Request	Comparison 1 to Parent Budget Increase / (Decrease)	%
Function: 6021 - Finance								
Revenue								
126.6021.4610.000	INTEREST ON INVESTMENTS	152.00	0.00	0.00	0.00	0.00	0.00	0.00%
	Total Revenue:	**152.00**	**0.00**	**0.00**	**0.00**	**0.00**	**0.00**	**0.00%**
	Total Function: 6021 - Finance:	**152.00**	**0.00**	**0.00**	**0.00**	**0.00**	**0.00**	**0.00%**
Function: 9000 - 9000								
Expense								
126.9000.7500.125	TRANSFER OUT - FUND 125	913.11	0.00	0.00	0.00	0.00	0.00	0.00%
	Total Expense:	**913.11**	**0.00**	**0.00**	**0.00**	**0.00**	**0.00**	**0.00%**
	Total Function: 9000 - 9000:	**913.11**	**0.00**	**0.00**	**0.00**	**0.00**	**0.00**	**0.00%**
	Total Fund: 126 - TIF-LMI:	**-27,806.10**	**0.00**	**0.00**	**0.00**	**0.00**	**0.00**	**0.00%**
Fund: 130 - CITY TORT LIABILITY								
Function: 1010 - Police Operations/Crime Prevention								
Revenue								
130.1010.4875.000	RFNDS/REIMB: POLICE	19,259.15	30,000.00	23,889.66	30,000.00	30,000.00	0.00	0.00%
	Total Revenue:	**19,259.15**	**30,000.00**	**23,889.66**	**30,000.00**	**30,000.00**	**0.00**	**0.00%**
Expense								
130.1010.5260.000	DAMAGES/TORT LIAB CLAIMS	17,555.14	30,000.00	5,000.00	10,000.00	30,000.00	20,000.00	200.00%
130.1010.5410.000	REPAIRS & MAINTENANCE	33,833.27	0.00	24,376.19	30,000.00	0.00	-30,000.00	-100.00%
130.1010.5565.000	VEHICLE OPER/MAINT SPPLY	4,130.81	0.00	0.00	0.00	0.00	0.00	0.00%
130.1010.5600.000	OPERATING SUPPLIES	4,452.62	0.00	0.00	0.00	0.00	0.00	0.00%
130.1010.5718.000	MINOR EQUIP, UNCLASSFIED	0.00	0.00	2,407.03	10,000.00	0.00	-10,000.00	-100.00%
	Total Expense:	**59,971.84**	**30,000.00**	**31,783.22**	**50,000.00**	**30,000.00**	**-20,000.00**	**-40.00%**
	Total Function: 1010 - Police Operations/Crime Prevention:	**-40,712.69**	**0.00**	**-7,893.56**	**-20,000.00**	**0.00**	**20,000.00**	**-100.00%**
Function: 1050 - Fire Department								
Revenue								
130.1050.4875.000	REFND/REIMB: FIRE	1,501.00	0.00	0.00	0.00	0.00	0.00	0.00%
	Total Revenue:	**1,501.00**	**0.00**	**0.00**	**0.00**	**0.00**	**0.00**	**0.00%**
Expense								
130.1050.5342.000	CONTRACT-OUTSIDE HELP	1,800.00	0.00	0.00	0.00	0.00	0.00	0.00%
130.1050.5413.000	VEHICLE REPAIRS & MAINTEN/	1,501.00	0.00	0.00	0.00	0.00	0.00	0.00%
130.1050.5718.000	MINOR EQUIP, UNCLASSFIED	0.00	0.00	4,540.00	4,540.00	0.00	-4,540.00	-100.00%
	Total Expense:	**3,301.00**	**0.00**	**4,540.00**	**4,540.00**	**0.00**	**-4,540.00**	**-100.00%**
	Total Function: 1050 - Fire Department:	**-1,800.00**	**0.00**	**-4,540.00**	**-4,540.00**	**0.00**	**4,540.00**	**-100.00%**

Budget Comparison Report

Account Number		2021-2022 Total Activity	2022-2023 Total Budget	2022-2023 YTD Activity Through Feb	Parent Budget 2022-2023 FY2023 Amend	Comparison 1 Budget 2023-2024 FY2024 Dept Request	Comparison 1 to Parent Budget Increase / (Decrease)	%
Function: 1075 - Code Enforcement								
Revenue								
130.1075.4875.000	RFNDS/REIMB	0.00	0.00	4,118.78	4,119.00	0.00	-4,119.00	-100.00%
	Total Revenue:	**0.00**	**0.00**	**4,118.78**	**4,119.00**	**0.00**	**-4,119.00**	**-100.00%**
Expense								
130.1075.5410.000	REPAIRS & MAINTENANCE	0.00	0.00	4,118.78	4,119.00	0.00	-4,119.00	-100.00%
	Total Expense:	**0.00**	**0.00**	**4,118.78**	**4,119.00**	**0.00**	**-4,119.00**	**-100.00%**
	Total Function: 1075 - Code Enforcement:	**0.00**	**0.00**	**0.00**	**0.00**	**0.00**	**0.00**	**0.00%**
Function: 1099 - Police and Fire Building Exps								
Revenue								
130.1099.4875.000	RFNDS/REIMB: POLICE & FIRE	12,829.11	0.00	0.00	0.00	0.00	0.00	0.00%
	Total Revenue:	**12,829.11**	**0.00**	**0.00**	**0.00**	**0.00**	**0.00**	**0.00%**
Expense								
130.1099.5342.000	CONTRACT-OUTSIDE HELP	1,248.75	0.00	3,746.25	3,750.00	0.00	-3,750.00	-100.00%
130.1099.5410.000	REPAIRS & MAINTENANCE	0.00	0.00	11,025.00	11,025.00	0.00	-11,025.00	-100.00%
	Total Expense:	**1,248.75**	**0.00**	**14,771.25**	**14,775.00**	**0.00**	**-14,775.00**	**-100.00%**
	Total Function: 1099 - Police and Fire Building Exps:	**11,580.36**	**0.00**	**-14,771.25**	**-14,775.00**	**0.00**	**14,775.00**	**-100.00%**
Function: 2010 - Roads, Bridges, Sidewalks								
Revenue								
130.2010.4616.000	INT CHRGD - ACCTS REC	5.37	0.00	17.16	20.00	0.00	-20.00	-100.00%
130.2010.4875.000	RFNDS/REIMB: STREETS	7,467.28	10,000.00	4,832.98	10,000.00	10,000.00	0.00	0.00%
	Total Revenue:	**7,472.65**	**10,000.00**	**4,850.14**	**10,020.00**	**10,000.00**	**-20.00**	**-0.20%**
Expense								
130.2010.5260.000	DAMAGES/TORT LIAB CLAIMS	470.05	10,000.00	0.00	0.00	10,000.00	10,000.00	0.00%
130.2010.5410.000	REPAIRS & MAINTENANCE	13,435.69	0.00	4,677.95	10,000.00	0.00	-10,000.00	-100.00%
	Total Expense:	**13,905.74**	**10,000.00**	**4,677.95**	**10,000.00**	**10,000.00**	**0.00**	**0.00%**
	Total Function: 2010 - Roads, Bridges, Sidewalks:	**-6,433.09**	**0.00**	**172.19**	**20.00**	**0.00**	**-20.00**	**-100.00%**
Function: 2030 - Street Lighting								
Revenue								
130.2030.4875.000	RFDS:REIMB/TRAFFIC SIGNALS	5,339.15	0.00	614.63	1,000.00	0.00	-1,000.00	-100.00%
	Total Revenue:	**5,339.15**	**0.00**	**614.63**	**1,000.00**	**0.00**	**-1,000.00**	**-100.00%**
Expense								
130.2030.5600.000	OPERATING SUPPLIES	8,364.71	0.00	0.00	0.00	0.00	0.00	0.00%
	Total Expense:	**8,364.71**	**0.00**	**0.00**	**0.00**	**0.00**	**0.00**	**0.00%**
	Total Function: 2030 - Street Lighting:	**-3,025.56**	**0.00**	**614.63**	**1,000.00**	**0.00**	**-1,000.00**	**-100.00%**

Budget Comparison Report

Account Number		2021-2022 Total Activity	2022-2023 Total Budget	2022-2023 YTD Activity Through Feb	Parent Budget 2022-2023 FY2023 Amend	Comparison 1 Budget 2023-2024 FY2024 Dept Request	Comparison 1 to Parent Budget Increase / (Decrease)	%
Function: 2040 - Traffic Safety								
Revenue								
130.2040.4875.000	REFND/REIMB: T SIGNALS	72,697.67	0.00	9,631.50	15,000.00	0.00	-15,000.00	-100.00%
	Total Revenue:	**72,697.67**	**0.00**	**9,631.50**	**15,000.00**	**0.00**	**-15,000.00**	**-100.00%**
Expense								
130.2040.5010.010	REGULAR-NON UNION	834.48	0.00	0.00	0.00	0.00	0.00	0.00%
130.2040.5010.040	REGULAR - PPME UNION	1,725.96	0.00	0.00	0.00	0.00	0.00	0.00%
130.2040.5101.010	SOCIAL SECURITY-NON UNION	50.94	0.00	0.00	0.00	0.00	0.00	0.00%
130.2040.5101.040	SOCIAL SECURITY - PPME UNIC	99.06	0.00	0.00	0.00	0.00	0.00	0.00%
130.2040.5102.010	MEDICARE-NON UNION	11.91	0.00	0.00	0.00	0.00	0.00	0.00%
130.2040.5102.040	MEDICARE-PPME UNION	23.17	0.00	0.00	0.00	0.00	0.00	0.00%
130.2040.5111.010	IPERS-NON UNION	78.77	0.00	0.00	0.00	0.00	0.00	0.00%
130.2040.5111.040	IPERS-PPME UNION	162.93	0.00	0.00	0.00	0.00	0.00	0.00%
130.2040.5121.040	GRP INSUR-PPME UNION	436.28	0.00	0.00	0.00	0.00	0.00	0.00%
130.2040.5410.000	REPAIRS & MAINTENANCE	315.00	0.00	0.00	0.00	0.00	0.00	0.00%
130.2040.5600.000	OPERATING SUPPLIES	1,500.00	0.00	0.00	0.00	0.00	0.00	0.00%
130.2040.5780.000	TRAFFIC SIGNALS	48,500.00	0.00	0.00	0.00	0.00	0.00	0.00%
	Total Expense:	**53,738.50**	**0.00**	**0.00**	**0.00**	**0.00**	**0.00**	**0.00%**
	Total Function: 2040 - Traffic Safety:	**18,959.17**	**0.00**	**9,631.50**	**15,000.00**	**0.00**	**-15,000.00**	**-100.00%**
Function: 2050 - Snow Removal								
Expense								
130.2050.5260.000	DAMAGES/TORT LIAB CLAIMS	75.00	0.00	0.00	0.00	0.00	0.00	0.00%
	Total Expense:	**75.00**	**0.00**	**0.00**	**0.00**	**0.00**	**0.00**	**0.00%**
	Total Function: 2050 - Snow Removal:	**75.00**	**0.00**	**0.00**	**0.00**	**0.00**	**0.00**	**0.00%**
Function: 2080 - Airport								
Revenue								
130.2080.4875.000	RFNDS/REIMB	25,130.57	0.00	182,411.85	182,412.00	0.00	-182,412.00	-100.00%
	Total Revenue:	**25,130.57**	**0.00**	**182,411.85**	**182,412.00**	**0.00**	**-182,412.00**	**-100.00%**
Expense								
130.2080.5260.000	DAMAGES/TORT LIAB CLAIMS	11,380.00	0.00	0.00	0.00	0.00	0.00	0.00%
130.2080.5342.000	CONTRACT-OUTSIDE HELP	326,372.25	0.00	29,211.35	29,212.00	0.00	-29,212.00	-100.00%
130.2080.5410.000	REPAIRS & MAINTENANCE	305,903.50	0.00	0.00	0.00	0.00	0.00	0.00%
130.2080.5600.000	OPERATING SUPPLIES	0.00	0.00	0.00	4,000.00	0.00	-4,000.00	-100.00%
130.2080.5980.000	REFUNDS/REIMB - AIRPORT	0.00	0.00	180.00	180.00	0.00	-180.00	-100.00%
	Total Expense:	**643,655.75**	**0.00**	**29,391.35**	**33,392.00**	**0.00**	**-33,392.00**	**-100.00%**
	Total Function: 2080 - Airport:	**-618,525.18**	**0.00**	**153,020.50**	**149,020.00**	**0.00**	**-149,020.00**	**-100.00%**

Budget Comparison Report

Account Number		2021-2022 Total Activity	2022-2023 Total Budget	2022-2023 YTD Activity Through Feb	Parent Budget 2022-2023 FY2023 Amend	Comparison 1 Budget 2023-2024 FY2024 Dept Request	Comparison 1 to Parent Budget Increase / (Decrease)	%
Function: 4010 - Library Services								
Expense								
130.4010.5410.000	REPAIRS & MAINTENANCE	7,500.00	0.00	0.00	0.00	0.00	0.00	0.00%
	Total Expense:	**7,500.00**	**0.00**	**0.00**	**0.00**	**0.00**	**0.00**	**0.00%**
	Total Function: 4010 - Library Services:	**7,500.00**	**0.00**	**0.00**	**0.00**	**0.00**	**0.00**	**0.00%**
Function: 4030 - Parks								
Revenue								
130.4030.4875.000	RFNDS/REIMB: P&R	116,473.19	0.00	5,194.53	5,200.00	0.00	-5,200.00	-100.00%
	Total Revenue:	**116,473.19**	**0.00**	**5,194.53**	**5,200.00**	**0.00**	**-5,200.00**	**-100.00%**
Expense								
130.4030.5342.000	CONTRACT-OUTSIDE HELP	36,618.58	0.00	4,580.00	5,200.00	0.00	-5,200.00	-100.00%
130.4030.5410.000	REPAIRS & MAINTENANCE	5,275.00	0.00	0.00	0.00	0.00	0.00	0.00%
	Total Expense:	**41,893.58**	**0.00**	**4,580.00**	**5,200.00**	**0.00**	**-5,200.00**	**-100.00%**
	Total Function: 4030 - Parks:	**74,579.61**	**0.00**	**614.53**	**0.00**	**0.00**	**0.00**	**0.00%**
Function: 4045 - Swimming Pools								
Revenue								
130.4045.4875.000	RFNDS/REIMB:	9,891.10	0.00	0.00	0.00	0.00	0.00	0.00%
	Total Revenue:	**9,891.10**	**0.00**	**0.00**	**0.00**	**0.00**	**0.00**	**0.00%**
	Total Function: 4045 - Swimming Pools:	**9,891.10**	**0.00**	**0.00**	**0.00**	**0.00**	**0.00**	**0.00%**
Function: 6021 - Finance								
Revenue								
130.6021.4610.000	INTEREST ON INVESTMENTS	2,977.76	1,000.00	1,709.42	2,000.00	1,000.00	-1,000.00	-50.00%
	Total Revenue:	**2,977.76**	**1,000.00**	**1,709.42**	**2,000.00**	**1,000.00**	**-1,000.00**	**-50.00%**
	Total Function: 6021 - Finance:	**2,977.76**	**1,000.00**	**1,709.42**	**2,000.00**	**1,000.00**	**-1,000.00**	**-50.00%**
Function: 6050 - City Hall & Gen Buildings								
Revenue								
130.6050.4875.000	REFNDS/REIMB	819.93	0.00	0.00	0.00	0.00	0.00	0.00%
	Total Revenue:	**819.93**	**0.00**	**0.00**	**0.00**	**0.00**	**0.00**	**0.00%**
Expense								
130.6050.5410.000	REPAIRS & MAINTENANCE	530.00	0.00	0.00	0.00	0.00	0.00	0.00%
	Total Expense:	**530.00**	**0.00**	**0.00**	**0.00**	**0.00**	**0.00**	**0.00%**
	Total Function: 6050 - City Hall & Gen Buildings:	**289.93**	**0.00**	**0.00**	**0.00**	**0.00**	**0.00**	**0.00%**

Budget Comparison Report

Account Number		2021-2022 Total Activity	2022-2023 Total Budget	2022-2023 YTD Activity Through Feb	Parent Budget 2022-2023 FY2023 Amend	Comparison 1 Budget 2023-2024 FY2024 Dept Request	Comparison 1 to Parent Budget Increase / (Decrease)	%
Function: 6900 - Other Gen Gov								
Revenue								
130.6900.4875.000	RFNDS/REIMB: GEN GVT	29.89	0.00	0.00	0.00	0.00	0.00	0.00%
	Total Revenue:	**29.89**	**0.00**	**0.00**	**0.00**	**0.00**	**0.00**	**0.00%**
	Total Function: 6900 - Other Gen Gov:	**29.89**	**0.00**	**0.00**	**0.00**	**0.00**	**0.00**	**0.00%**
Function: 8016 - Sanitary Sewer								
Revenue								
130.8016.4875.000	REFUNDS:REIMBURSEMENTS	15,935.35	0.00	0.00	0.00	0.00	0.00	0.00%
	Total Revenue:	**15,935.35**	**0.00**	**0.00**	**0.00**	**0.00**	**0.00**	**0.00%**
	Total Function: 8016 - Sanitary Sewer:	**15,935.35**	**0.00**	**0.00**	**0.00**	**0.00**	**0.00**	**0.00%**
Function: 8050 - Transit								
Revenue								
130.8050.4875.000	REFUNDS:REIMB	33,567.47	0.00	0.00	0.00	0.00	0.00	0.00%
	Total Revenue:	**33,567.47**	**0.00**	**0.00**	**0.00**	**0.00**	**0.00**	**0.00%**
Expense								
130.8050.5410.000	REPAIRS & MAINT	67,134.94	0.00	0.00	0.00	0.00	0.00	0.00%
	Total Expense:	**67,134.94**	**0.00**	**0.00**	**0.00**	**0.00**	**0.00**	**0.00%**
	Total Function: 8050 - Transit:	**-33,567.47**	**0.00**	**0.00**	**0.00**	**0.00**	**0.00**	**0.00%**
Function: 9000 - 9000								
Revenue								
130.9000.6500.145	TRANSFER IN - FUND 145	0.00	0.00	7,450.00	7,450.00	0.00	-7,450.00	-100.00%
130.9000.6500.149	TRANSFER IN - FUND 149	0.00	0.00	614.96	615.00	0.00	-615.00	-100.00%
	Total Revenue:	**0.00**	**0.00**	**8,064.96**	**8,065.00**	**0.00**	**-8,065.00**	**-100.00%**
Expense								
130.9000.7500.140	TRANSFER OUT P&R DONATIO	0.00	0.00	0.00	41,614.00	0.00	-41,614.00	-100.00%
130.9000.7500.156	TRANSFER OUT - FUND 156	0.00	0.00	0.00	54,124.00	0.00	-54,124.00	-100.00%
130.9000.7500.170	TRANSFER OUT - FUND 170	0.00	0.00	0.00	3,091.00	0.00	-3,091.00	-100.00%
130.9000.7500.312	TRANSFER OUT - FUND 312	0.00	0.00	8,380.38	8,381.00	0.00	-8,381.00	-100.00%
130.9000.7500.615	TRANSFER OUT - FUND 615	0.00	0.00	43,016.27	43,017.00	0.00	-43,017.00	-100.00%
	Total Expense:	**0.00**	**0.00**	**51,396.65**	**150,227.00**	**0.00**	**-150,227.00**	**-100.00%**
	Total Function: 9000 - 9000:	**0.00**	**0.00**	**-43,331.69**	**-142,162.00**	**0.00**	**142,162.00**	**-100.00%**
	Total Fund: 130 - CITY TORT LIABILITY:	**-577,395.82**	**1,000.00**	**95,226.27**	**-14,437.00**	**1,000.00**	**15,437.00**	**-106.93%**

Budget Comparison Report

Account Number		2021-2022 Total Activity	2022-2023 Total Budget	2022-2023 YTD Activity Through Feb	Parent Budget 2022-2023 FY2023 Amend	Comparison 1 Budget 2023-2024 FY2024 Dept Request	Comparison 1 to Parent Budget Increase / (Decrease)	%
Fund: 132 - GRANTS-STATE/LOCAL AGENCIES								
Function: 2040 - Traffic Safety								
Revenue								
132.2040.4330.000	STATE OPERATING GRANT	0.00	0.00	0.00	0.00	60,000.00	60,000.00	0.00%
	Total Revenue:	**0.00**	**0.00**	**0.00**	**0.00**	**60,000.00**	**60,000.00**	**0.00%**
Expense								
132.2040.5780.000	TRAFFIC SIGNALS	0.00	0.00	0.00	60,000.00	0.00	-60,000.00	-100.00%
	Total Expense:	**0.00**	**0.00**	**0.00**	**60,000.00**	**0.00**	**-60,000.00**	**-100.00%**
	Total Function: 2040 - Traffic Safety:	**0.00**	**0.00**	**0.00**	**-60,000.00**	**60,000.00**	**120,000.00**	**-200.00%**
Function: 4030 - Parks								
Revenue								
132.4030.4310.000	P&R FED OPER GRNT	0.00	0.00	1,302.00	62,362.00	0.00	-62,362.00	-100.00%
132.4030.4330.000	STATE OPER GRANT	0.00	66,250.00	0.00	0.00	0.00	0.00	0.00%
132.4030.4350.000	LOCAL GRANTS	28,000.00	0.00	0.00	0.00	0.00	0.00	0.00%
	Total Revenue:	**28,000.00**	**66,250.00**	**1,302.00**	**62,362.00**	**0.00**	**-62,362.00**	**-100.00%**
Expense								
132.4030.5233.000	ENGINEERING FEES	148,485.97	0.00	0.00	3,996.00	0.00	-3,996.00	-100.00%
132.4030.5342.000	CONTRACT-OUTSIDE HELP	3,959.96	176,250.00	60,098.48	62,362.00	0.00	-62,362.00	-100.00%
	Total Expense:	**152,445.93**	**176,250.00**	**60,098.48**	**66,358.00**	**0.00**	**-66,358.00**	**-100.00%**
	Total Function: 4030 - Parks:	**-124,445.93**	**-110,000.00**	**-58,796.48**	**-3,996.00**	**0.00**	**3,996.00**	**-100.00%**
Function: 5010 - Community Beautification								
Revenue								
132.5010.4350.000	LOCAL/COUNTY GRANTS	10,000.00	0.00	0.00	0.00	0.00	0.00	0.00%
	Total Revenue:	**10,000.00**	**0.00**	**0.00**	**0.00**	**0.00**	**0.00**	**0.00%**
	Total Function: 5010 - Community Beautification:	**10,000.00**	**0.00**	**0.00**	**0.00**	**0.00**	**0.00**	**0.00%**
Function: 5020 - Economic Development								
Revenue								
132.5020.4310.000	FED OPER GRANT	158,736.00	1,568,000.00	112,533.00	703,214.00	1,058,360.00	355,146.00	50.50%
132.5020.4330.000	STATE OPER GRANT	350,000.00	1,080,646.00	0.00	632,832.00	620,000.00	-12,832.00	-2.03%
132.5020.4350.000	LOCAL/COUNTY GRANTS	0.00	200,000.00	0.00	0.00	200,000.00	200,000.00	0.00%
132.5020.4820.000	ECONOMIC CONTRIBS	11,876.00	230,000.00	0.00	0.00	396,000.00	396,000.00	0.00%
132.5020.4875.000	REFUNDS/REIMB	0.00	335,971.00	200,192.00	358,972.00	0.00	-358,972.00	-100.00%
	Total Revenue:	**520,612.00**	**3,414,617.00**	**312,725.00**	**1,695,018.00**	**2,274,360.00**	**579,342.00**	**34.18%**
Expense								
132.5020.5331.000	PAYMENTS-OTHER ENTITIES	533,357.80	2,470,572.00	495,427.50	1,379,692.00	1,303,883.00	-75,809.00	-5.49%

Account Number		2021-2022 Total Activity	2022-2023 Total Budget	2022-2023 YTD Activity Through Feb	Parent Budget 2022-2023 FY2023 Amend	Comparison 1 Budget 2023-2024 FY2024 Dept Request	Comparison 1 to Parent Budget Increase / (Decrease)	%
132.5020.5342.000	CONTRACT-OUTSIDE HELP	251,945.71	1,150,000.00	36,508.20	87,091.00	1,150,000.00	1,062,909.00	1,220.46%
	Total Expense:	**785,303.51**	**3,620,572.00**	**531,935.70**	**1,466,783.00**	**2,453,883.00**	**987,100.00**	**67.30%**
	Total Function: 5020 - Economic Development:	**-264,691.51**	**-205,955.00**	**-219,210.70**	**228,235.00**	**-179,523.00**	**-407,758.00**	**-178.66%**
Function: 9000 - 9000								
Revenue								
132.9000.6500.030	Transfer to Grant Funds	0.00	110,000.00	0.00	0.00	0.00	0.00	0.00%
132.9000.6500.110	TRANSFER IN - RUT	0.00	0.00	0.00	0.00	0.00	0.00	0.00%
132.9000.6500.121	TR FROM LOCAL OPTION	32,908.71	220,000.00	0.00	92,091.00	375,000.00	282,909.00	307.21%
132.9000.6500.300	TRANSFER IN - FUND 300	69,853.97	0.00	0.00	0.00	0.00	0.00	0.00%
132.9000.6500.740	TRANSFER IN - STORM WATER	54,617.00	0.00	0.00	0.00	0.00	0.00	0.00%
	Total Revenue:	**157,379.68**	**330,000.00**	**0.00**	**92,091.00**	**375,000.00**	**282,909.00**	**307.21%**
	Total Function: 9000 - 9000:	**157,379.68**	**330,000.00**	**0.00**	**92,091.00**	**375,000.00**	**282,909.00**	**307.21%**
	Total Fund: 132 - GRANTS-STATE/LOCAL AGENCIES:	**-221,757.76**	**14,045.00**	**-278,007.18**	**256,330.00**	**255,477.00**	**-853.00**	**-0.33%**
Fund: 133 - UNDESIGNATED FEDERAL GRANTS								
Function: 2900 - Other Public Works								
Revenue								
133.2900.4310.000	FEDERAL OPERATING GRANT	0.00	200,000.00	100,612.34	150,000.00	150,000.00	0.00	0.00%
	Total Revenue:	**0.00**	**200,000.00**	**100,612.34**	**150,000.00**	**150,000.00**	**0.00**	**0.00%**
Expense								
133.2900.5010.010	REGULAR-NON UNION	697.68	0.00	2,874.24	0.00	0.00	0.00	0.00%
133.2900.5101.010	SOCIAL SECURITY-NON UNION	41.94	0.00	172.34	0.00	0.00	0.00	0.00%
133.2900.5102.010	MEDICARE-NON UNION	9.79	0.00	40.31	0.00	0.00	0.00	0.00%
133.2900.5111.010	IPERS-NON UNION	65.87	0.00	271.33	0.00	0.00	0.00	0.00%
133.2900.5121.010	GRP INSUR-NON UNION	81.09	0.00	366.11	0.00	0.00	0.00	0.00%
133.2900.5123.010	WORKCOMP-NON UNION	0.62	0.00	4.70	0.00	0.00	0.00	0.00%
133.2900.5342.000	CONTRACT - OUTSIDE HELP	26,688.31	181,000.00	88,054.27	140,000.00	140,000.00	0.00	0.00%
133.2900.5460.000	CONFERENCE EXPENSE	200.00	1,000.00	163.31	500.00	500.00	0.00	0.00%
133.2900.5465.000	TRAVEL -HOTEL/MOTEL	0.00	0.00	583.40	584.00	1,000.00	416.00	71.23%
	Total Expense:	**27,785.30**	**182,000.00**	**92,530.01**	**141,084.00**	**141,500.00**	**416.00**	**0.29%**
	Total Function: 2900 - Other Public Works:	**-27,785.30**	**18,000.00**	**8,082.33**	**8,916.00**	**8,500.00**	**-416.00**	**-4.67%**
Function: 4065 - Coliseum								
Revenue								
133.4065.4310.000	FED OPER GRANT	0.00	0.00	0.00	0.00	135,000.00	135,000.00	0.00%
	Total Revenue:	**0.00**	**0.00**	**0.00**	**0.00**	**135,000.00**	**135,000.00**	**0.00%**
Expense								
133.4065.5342.000	CONTRACT - OUTSIDE HELP	0.00	0.00	0.00	0.00	244,050.00	244,050.00	0.00%

Account Number		2021-2022 Total Activity	2022-2023 Total Budget	2022-2023 YTD Activity Through Feb	Parent Budget 2022-2023 FY2023 Amend	Comparison 1 Budget 2023-2024 FY2024 Dept Request	Comparison 1 to Parent Budget Increase / (Decrease)	%
133.4065.5750.000	OTHER CAP EQUIP > $5,000	0.00	0.00	0.00	0.00	0.00	0.00	0.00%
	Total Expense:	**0.00**	**0.00**	**0.00**	**0.00**	**244,050.00**	**244,050.00**	**0.00%**
	Total Function: 4065 - Coliseum:	**0.00**	**0.00**	**0.00**	**0.00**	**-109,050.00**	**-109,050.00**	**0.00%**
Function: 9000 - 9000								
Revenue								
133.9000.6500.031	TRANSFER IN - FUND 031	0.00	33,750.00	0.00	0.00	26,775.00	26,775.00	0.00%
133.9000.6500.140	TRANSFER IN - FUND 140	0.00	0.00	0.00	0.00	82,275.00	82,275.00	0.00%
	Total Revenue:	**0.00**	**33,750.00**	**0.00**	**0.00**	**109,050.00**	**109,050.00**	**0.00%**
	Total Function: 9000 - 9000:	**0.00**	**33,750.00**	**0.00**	**0.00**	**109,050.00**	**109,050.00**	**0.00%**
	Total Fund: 133 - UNDESIGNATED FEDERAL GRANTS:	**-27,785.30**	**51,750.00**	**8,082.33**	**8,916.00**	**8,500.00**	**-416.00**	**-4.67%**
Fund: 140 - PARK & REC DONATION FUND								
Function: 4030 - Parks								
Revenue								
140.4030.4820.000	PARK & REC CONTRIBS	166,242.18	50,000.00	68,928.71	50,000.00	50,000.00	0.00	0.00%
140.4030.4875.000	RFNDS/REIMB: P&R	185.96	0.00	0.00	0.00	0.00	0.00	0.00%
	Total Revenue:	**166,428.14**	**50,000.00**	**68,928.71**	**50,000.00**	**50,000.00**	**0.00**	**0.00%**
Expense								
140.4030.5342.000	CONTRACT-OUTSIDE HELP	4,334.98	50,000.00	8,478.64	50,000.00	50,000.00	0.00	0.00%
140.4030.5380.000	RENTS & LEASES	0.00	0.00	65.00	65.00	0.00	-65.00	-100.00%
140.4030.5410.000	REPAIRS & MAINTENANCE	0.00	0.00	2,351.83	500.00	0.00	-500.00	-100.00%
140.4030.5450.000	TELEPHONE/OTHR COMMNCT	1,559.40	0.00	1,039.60	1,700.00	0.00	-1,700.00	-100.00%
140.4030.5600.000	OPERATING SUPPLIES	3,035.05	0.00	10,119.07	6,000.00	0.00	-6,000.00	-100.00%
140.4030.5609.000	AGRICULTURAL SUPPLIES	0.00	2,000.00	0.00	2,000.00	2,000.00	0.00	0.00%
140.4030.5611.000	BLDG,GRD OPER/MAINT SPLY	6,378.97	2,000.00	6,757.70	10,000.00	2,000.00	-8,000.00	-80.00%
140.4030.5718.000	MINOR EQUIP, UNCLASSFIED	10,296.49	900.00	4,810.00	2,000.00	900.00	-1,100.00	-55.00%
	Total Expense:	**25,604.89**	**54,900.00**	**33,621.84**	**72,265.00**	**54,900.00**	**-17,365.00**	**-24.03%**
	Total Function: 4030 - Parks:	**140,823.25**	**-4,900.00**	**35,306.87**	**-22,265.00**	**-4,900.00**	**17,365.00**	**-77.99%**
Function: 4040 - Recreation								
Revenue								
140.4040.4820.000	PARK & REC CONTRIBUTIONS	0.00	0.00	500.00	500.00	0.00	-500.00	-100.00%
	Total Revenue:	**0.00**	**0.00**	**500.00**	**500.00**	**0.00**	**-500.00**	**-100.00%**
	Total Function: 4040 - Recreation:	**0.00**	**0.00**	**500.00**	**500.00**	**0.00**	**-500.00**	**-100.00%**
Function: 4041 - Youth Recreation & Camps								
Revenue								
140.4041.4820.000	CONTRIBUTIONS	0.00	0.00	675.00	675.00	0.00	-675.00	-100.00%
	Total Revenue:	**0.00**	**0.00**	**675.00**	**675.00**	**0.00**	**-675.00**	**-100.00%**

Budget Comparison Report

Account Number		2021-2022 Total Activity	2022-2023 Total Budget	2022-2023 YTD Activity Through Feb	Parent Budget 2022-2023 FY2023 Amend	Comparison 1 Budget 2023-2024 FY2024 Dept Request	Comparison 1 to Parent Budget Increase / (Decrease)	%
Expense								
140.4041.5600.000	OPERATING SUPPLIES	0.00	0.00	174.90	500.00	0.00	-500.00	-100.00%
140.4041.5601.000	PROMOTION/PROGRAM SPPL\	0.00	0.00	338.36	0.00	0.00	0.00	0.00%
140.4041.5613.000	MERCHANDISE FOR RESALE	0.00	0.00	63.36	0.00	0.00	0.00	0.00%
	Total Expense:	**0.00**	**0.00**	**576.62**	**500.00**	**0.00**	**-500.00**	**-100.00%**
	Total Function: 4041 - Youth Recreation & Camps:	**0.00**	**0.00**	**98.38**	**175.00**	**0.00**	**-175.00**	**-100.00%**
Function: 4065 - Coliseum								
Revenue								
140.4065.4820.000	COLISEUM CONTRIBUTIONS	0.00	0.00	150.00	150.00	0.00	-150.00	-100.00%
	Total Revenue:	**0.00**	**0.00**	**150.00**	**150.00**	**0.00**	**-150.00**	**-100.00%**
	Total Function: 4065 - Coliseum:	**0.00**	**0.00**	**150.00**	**150.00**	**0.00**	**-150.00**	**-100.00%**
Function: 6021 - Finance								
Revenue								
140.6021.4610.000	INTEREST ON INVESTMENTS	1,587.71	900.00	3,330.98	5,000.00	2,000.00	-3,000.00	-60.00%
	Total Revenue:	**1,587.71**	**900.00**	**3,330.98**	**5,000.00**	**2,000.00**	**-3,000.00**	**-60.00%**
	Total Function: 6021 - Finance:	**1,587.71**	**900.00**	**3,330.98**	**5,000.00**	**2,000.00**	**-3,000.00**	**-60.00%**
Function: 9000 - 9000								
Revenue								
140.9000.6500.130	TRANSFER IN - INSURANCE 13(	0.00	0.00	0.00	41,614.00	0.00	-41,614.00	-100.00%
	Total Revenue:	**0.00**	**0.00**	**0.00**	**41,614.00**	**0.00**	**-41,614.00**	**-100.00%**
Expense								
140.9000.7500.133	TRANSFER OUT - FUND 133	0.00	0.00	0.00	0.00	82,275.00	82,275.00	0.00%
140.9000.7500.760	TRANSFER OUT - P&R CONCES	0.00	0.00	0.00	20,000.00	0.00	-20,000.00	-100.00%
	Total Expense:	**0.00**	**0.00**	**0.00**	**20,000.00**	**82,275.00**	**62,275.00**	**311.38%**
	Total Function: 9000 - 9000:	**0.00**	**0.00**	**0.00**	**21,614.00**	**-82,275.00**	**-103,889.00**	**-480.66%**
	Total Fund: 140 - PARK & REC DONATION FUND:	**142,410.96**	**-4,000.00**	**39,386.23**	**5,174.00**	**-85,175.00**	**-90,349.00**	**-1,746.21%**
Fund: 141 - MTOWN TENNIS ASSOC								
Function: 6021 - Finance								
Revenue								
141.6021.4610.000	INTEREST ON INVESTMENTS	26.59	20.00	30.51	50.00	20.00	-30.00	-60.00%
	Total Revenue:	**26.59**	**20.00**	**30.51**	**50.00**	**20.00**	**-30.00**	**-60.00%**
	Total Function: 6021 - Finance:	**26.59**	**20.00**	**30.51**	**50.00**	**20.00**	**-30.00**	**-60.00%**
	Total Fund: 141 - MTOWN TENNIS ASSOC:	**26.59**	**20.00**	**30.51**	**50.00**	**20.00**	**-30.00**	**-60.00%**

Budget Comparison Report

Account Number		2021-2022 Total Activity	2022-2023 Total Budget	2022-2023 YTD Activity Through Feb	Parent Budget 2022-2023 FY2023 Amend	Comparison 1 Budget 2023-2024 FY2024 Dept Request	Comparison 1 to Parent Budget Increase / (Decrease)	%
Fund: 142 - SOFTBALL ASSOCIATION FUND								
Function: 4030 - Parks								
Revenue								
142.4030.4875.000	RFNDS/REIMB: P&R	323.99	30,780.00	30,011.27	32,381.00	30,781.00	-1,600.00	-4.94%
	Total Revenue:	**323.99**	**30,780.00**	**30,011.27**	**32,381.00**	**30,781.00**	**-1,600.00**	**-4.94%**
Expense								
142.4030.5010.090	REGULAR-P&R UNION	0.00	0.00	0.00	0.00	0.00	0.00	0.00%
142.4030.5030.070	PART-TIME TEMPORARY	7,662.88	14,500.00	8,501.77	14,500.00	14,500.00	0.00	0.00%
142.4030.5101.070	SOCIAL SECURITY-PT TEMP	475.10	899.00	527.10	899.00	899.00	0.00	0.00%
142.4030.5101.090	SOCIAL SECURITY-P&R UNION	0.00	0.00	0.00	0.00	0.00	0.00	0.00%
142.4030.5102.070	MEDICARE-TEMPORARY	111.10	210.00	123.28	210.00	210.00	0.00	0.00%
142.4030.5102.090	MEDICARE-P&R UNION	0.00	0.00	0.00	0.00	0.00	0.00	0.00%
142.4030.5111.090	IPERS-P&R UNION	0.00	0.00	0.00	0.00	0.00	0.00	0.00%
142.4030.5121.090	GRP INSUR-P&R UNION	0.00	0.00	0.00	0.00	0.00	0.00	0.00%
142.4030.5123.070	WORKCOMP-TEMPORARY	123.69	421.00	247.27	422.00	422.00	0.00	0.00%
142.4030.5123.090	WORKCOMP-P&R UNION	0.00	0.00	0.00	0.00	0.00	0.00	0.00%
142.4030.5342.000	CONTRACT-OUTSIDE HELP	7,266.55	6,000.00	2,656.25	6,000.00	6,000.00	0.00	0.00%
142.4030.5344.000	CONTRACT-MAINTENANCE	1,647.25	200.00	99.50	200.00	200.00	0.00	0.00%
142.4030.5410.000	REPAIRS & MAINTENANCE	246.49	600.00	140.00	600.00	600.00	0.00	0.00%
142.4030.5481.000	ELECTRICITY	6,802.17	5,800.00	4,181.28	5,800.00	5,800.00	0.00	0.00%
142.4030.5562.000	GROUNDS EQUIP MAINT SPLY	1,319.62	900.00	0.00	900.00	900.00	0.00	0.00%
142.4030.5600.000	OPERATING SUPPLIES	0.00	700.00	0.00	700.00	700.00	0.00	0.00%
142.4030.5611.000	BLDG,GRD OPER/MAINT SPLY	1,754.76	400.00	1,090.01	2,000.00	400.00	-1,600.00	-80.00%
142.4030.5620.000	RM-CRUSHED ROCK	216.32	0.00	0.00	0.00	0.00	0.00	0.00%
142.4030.5718.000	MINOR EQUIP, UNCLASSFIED	288.76	150.00	0.00	150.00	150.00	0.00	0.00%
	Total Expense:	**27,914.69**	**30,780.00**	**17,566.46**	**32,381.00**	**30,781.00**	**-1,600.00**	**-4.94%**
	Total Function: 4030 - Parks:	**-27,590.70**	**0.00**	**12,444.81**	**0.00**	**0.00**	**0.00**	**0.00%**
Total Fund: 142 - SOFTBALL ASSOCIATION FUND:		**-27,590.70**	**0.00**	**12,444.81**	**0.00**	**0.00**	**0.00**	**0.00%**
Fund: 144 - LIVE HEALTHY IOWA								
Function: 4040 - Recreation								
Revenue								
144.4040.4820.000	HERSEY CONTRIBUTIONS	985.00	7,500.00	0.00	7,447.00	7,447.00	0.00	0.00%
	Total Revenue:	**985.00**	**7,500.00**	**0.00**	**7,447.00**	**7,447.00**	**0.00**	**0.00%**
Expense								
144.4040.5030.070	PART-TIME TEMPORARY	0.00	500.00	0.00	500.00	500.00	0.00	0.00%
144.4040.5101.070	SOCIAL SECURITY-PT TEMP	0.00	31.00	0.00	31.00	31.00	0.00	0.00%
144.4040.5102.070	MEDICARE-TEMPORARY	0.00	7.00	0.00	7.00	7.00	0.00	0.00%
144.4040.5123.070	WORKCOMP-TEMPORARY	0.00	15.00	0.00	15.00	15.00	0.00	0.00%

Account Number		2021-2022 Total Activity	2022-2023 Total Budget	2022-2023 YTD Activity Through Feb	Parent Budget 2022-2023 FY2023 Amend	Comparison 1 Budget 2023-2024 FY2024 Dept Request	Comparison 1 to Parent Budget Increase / (Decrease)	%
144.4040.5132.000	CLOTHING EXPENSE	0.00	5,000.00	0.00	5,000.00	5,000.00	0.00	0.00%
144.4040.5342.000	CONTRACT-OUTSIDE HELP	0.00	1,300.00	0.00	1,300.00	1,300.00	0.00	0.00%
144.4040.5600.000	OPERATING SUPPLIES	0.00	694.00	0.00	694.00	694.00	0.00	0.00%
	Total Expense:	**0.00**	**7,547.00**	**0.00**	**7,547.00**	**7,547.00**	**0.00**	**0.00%**
	Total Function: 4040 - Recreation:	**985.00**	**-47.00**	**0.00**	**-100.00**	**-100.00**	**0.00**	**0.00%**
Function: 6021 - Finance								
Revenue								
144.6021.4610.000	INTEREST ON INVESTMENTS	57.74	40.00	66.25	100.00	100.00	0.00	0.00%
	Total Revenue:	**57.74**	**40.00**	**66.25**	**100.00**	**100.00**	**0.00**	**0.00%**
	Total Function: 6021 - Finance:	**57.74**	**40.00**	**66.25**	**100.00**	**100.00**	**0.00**	**0.00%**
	Total Fund: 144 - LIVE HEALTHY IOWA :	**1,042.74**	**-7.00**	**66.25**	**0.00**	**0.00**	**0.00**	**0.00%**
Fund: 145 - TORNADO GENERAL								
Function: 2010 - Roads, Bridges, Sidewalks								
Revenue								
145.2010.4310.000	FEMA - FEDERAL GRANT REIM	0.00	0.00	63,396.56	63,397.00	0.00	-63,397.00	-100.00%
	Total Revenue:	**0.00**	**0.00**	**63,396.56**	**63,397.00**	**0.00**	**-63,397.00**	**-100.00%**
	Total Function: 2010 - Roads, Bridges, Sidewalks:	**0.00**	**0.00**	**63,396.56**	**63,397.00**	**0.00**	**-63,397.00**	**-100.00%**
Function: 2060 - Highway Engineering								
Revenue								
145.2060.4310.000	FEMA - FEDERAL GRANT	100,574.16	0.00	0.00	0.00	0.00	0.00	0.00%
145.2060.4330.000	STATE OPER GRANT	37,376.53	0.00	0.00	0.00	0.00	0.00	0.00%
	Total Revenue:	**137,950.69**	**0.00**	**0.00**	**0.00**	**0.00**	**0.00**	**0.00%**
	Total Function: 2060 - Highway Engineering:	**137,950.69**	**0.00**	**0.00**	**0.00**	**0.00**	**0.00**	**0.00%**
Function: 4030 - Parks								
Expense								
145.4030.5750.000	OTHER CAP EQUIP > $5,000	0.00	0.00	0.00	0.00	40,000.00	40,000.00	0.00%
	Total Expense:	**0.00**	**0.00**	**0.00**	**0.00**	**40,000.00**	**40,000.00**	**0.00%**
	Total Function: 4030 - Parks:	**0.00**	**0.00**	**0.00**	**0.00**	**40,000.00**	**40,000.00**	**0.00%**
Function: 6900 - Other Gen Gov								
Revenue								
145.6900.4310.000	FEMA - FEDERAL GRANT REIM	47,921.45	0.00	0.00	0.00	0.00	0.00	0.00%
	Total Revenue:	**47,921.45**	**0.00**	**0.00**	**0.00**	**0.00**	**0.00**	**0.00%**
	Total Function: 6900 - Other Gen Gov:	**47,921.45**	**0.00**	**0.00**	**0.00**	**0.00**	**0.00**	**0.00%**

Budget Comparison Report

Account Number		2021-2022 Total Activity	2022-2023 Total Budget	2022-2023 YTD Activity Through Feb	Parent Budget 2022-2023 FY2023 Amend	Comparison 1 Budget 2023-2024 FY2024 Dept Request	Comparison 1 to Parent Budget Increase / (Decrease)	%
Function: 9000 - 9000								
Revenue								
145.9000.6500.001	TRANSFER IN - GEN FUND	0.99	0.00	0.00	0.00	0.00	0.00	0.00%
	Total Revenue:	**0.99**	**0.00**	**0.00**	**0.00**	**0.00**	**0.00**	**0.00%**
Expense								
145.9000.7500.110	TRANSFER OUT - FUND 145	0.00	0.00	0.00	0.00	141,000.00	141,000.00	0.00%
145.9000.7500.130	TRANSFER OUT - FUND 130	0.00	0.00	7,450.00	7,450.00	0.00	-7,450.00	-100.00%
145.9000.7500.618	TRANSFER OUT - WPCP TORN	0.00	0.00	0.00	0.00	0.00	0.00	0.00%
145.9000.7500.742	TRANSFER OUT - STORM/SEW	0.00	0.00	0.00	0.00	0.00	0.00	0.00%
	Total Expense:	**0.00**	**0.00**	**7,450.00**	**7,450.00**	**141,000.00**	**133,550.00**	**1,792.62%**
	Total Function: 9000 - 9000:	**0.99**	**0.00**	**-7,450.00**	**-7,450.00**	**-141,000.00**	**-133,550.00**	**1,792.62%**
	Total Fund: 145 - TORNADO GENERAL:	**185,873.13**	**0.00**	**55,946.56**	**55,947.00**	**-181,000.00**	**-236,947.00**	**-423.52%**
Fund: 146 - FEMA VALOR								
Function: 5900 - Other Community and Economic Dev.								
Revenue								
146.5900.4310.000	FED OPER GRANT	55,164.71	0.00	0.00	0.00	0.00	0.00	0.00%
	Total Revenue:	**55,164.71**	**0.00**	**0.00**	**0.00**	**0.00**	**0.00**	**0.00%**
Total Function: 5900 - Other Community and Economic Dev.:		**55,164.71**	**0.00**	**0.00**	**0.00**	**0.00**	**0.00**	**0.00%**
	Total Fund: 146 - FEMA VALOR:	**55,164.71**	**0.00**	**0.00**	**0.00**	**0.00**	**0.00**	**0.00%**
Fund: 147 - FEMA DEMO								
Function: 1075 - Code Enforcement								
Revenue								
147.1075.4310.000	FED OPER GRANT	16,074.93	0.00	0.00	0.00	0.00	0.00	0.00%
	Total Revenue:	**16,074.93**	**0.00**	**0.00**	**0.00**	**0.00**	**0.00**	**0.00%**
	Total Function: 1075 - Code Enforcement:	**16,074.93**	**0.00**	**0.00**	**0.00**	**0.00**	**0.00**	**0.00%**
	Total Fund: 147 - FEMA DEMO:	**16,074.93**	**0.00**	**0.00**	**0.00**	**0.00**	**0.00**	**0.00%**
Fund: 148 - FEMA-COVID19								
Function: 1010 - Police Operations/Crime Prevention								
Expense								
148.1010.5600.000	OPERATING SUPPLIES	0.00	0.00	0.00	0.00	0.00	0.00	0.00%
	Total Expense:	**0.00**	**0.00**	**0.00**	**0.00**	**0.00**	**0.00**	**0.00%**
Total Function: 1010 - Police Operations/Crime Prevention:		**0.00**	**0.00**	**0.00**	**0.00**	**0.00**	**0.00**	**0.00%**
Function: 1050 - Fire Department								
Expense								
148.1050.5600.000	OPERATING SUPPLIES	2,700.55	0.00	1,368.10	2,700.00	0.00	-2,700.00	-100.00%

Budget Comparison Report

Account Number		2021-2022 Total Activity	2022-2023 Total Budget	2022-2023 YTD Activity Through Feb	Parent Budget 2022-2023 FY2023 Amend	Comparison 1 Budget 2023-2024 FY2024 Dept Request	Comparison 1 to Parent Budget Increase / (Decrease)	%
148.1050.5630.000	EMS SUPPLIES	4,939.92	0.00	912.26	1,800.00	0.00	-1,800.00	-100.00%
	Total Expense:	**7,640.47**	**0.00**	**2,280.36**	**4,500.00**	**0.00**	**-4,500.00**	**-100.00%**
	Total Function: 1050 - Fire Department:	**7,640.47**	**0.00**	**2,280.36**	**4,500.00**	**0.00**	**-4,500.00**	**-100.00%**
Function: 2010 - Roads, Bridges, Sidewalks								
Expense								
148.2010.5600.000	OPERATING SUPPLIES	77.34	0.00	0.00	0.00	0.00	0.00	0.00%
148.2010.5611.000	BLDG,GRD OPER/MAINT SPLY	0.00	0.00	233.85	500.00	0.00	-500.00	-100.00%
	Total Expense:	**77.34**	**0.00**	**233.85**	**500.00**	**0.00**	**-500.00**	**-100.00%**
	Total Function: 2010 - Roads, Bridges, Sidewalks:	**77.34**	**0.00**	**233.85**	**500.00**	**0.00**	**-500.00**	**-100.00%**
Function: 4010 - Library Services								
Expense								
148.4010.5600.000	OPERATING SUPPLIES	2,216.11	0.00	0.00	0.00	0.00	0.00	0.00%
	Total Expense:	**2,216.11**	**0.00**	**0.00**	**0.00**	**0.00**	**0.00**	**0.00%**
	Total Function: 4010 - Library Services:	**2,216.11**	**0.00**	**0.00**	**0.00**	**0.00**	**0.00**	**0.00%**
Function: 6021 - Finance								
Expense								
148.6021.5010.010	REGULAR-NON UNION	372.55	0.00	1,214.46	0.00	0.00	0.00	0.00%
148.6021.5101.010	SOCIAL SECURITY-NON UNION	21.31	0.00	69.42	0.00	0.00	0.00	0.00%
148.6021.5102.010	MEDICARE-NON UNION	4.99	0.00	16.25	0.00	0.00	0.00	0.00%
148.6021.5111.010	IPERS-NON UNION	35.17	0.00	114.65	0.00	0.00	0.00	0.00%
148.6021.5121.010	GRP INSUR-NON UNION	80.09	0.00	255.51	0.00	0.00	0.00	0.00%
148.6021.5123.010	WORKCOMP-NON UNION	0.33	0.00	1.99	0.00	0.00	0.00	0.00%
148.6021.5600.000	OPERATING SUPPLIES	38.55	0.00	0.00	0.00	0.00	0.00	0.00%
	Total Expense:	**552.99**	**0.00**	**1,672.28**	**0.00**	**0.00**	**0.00**	**0.00%**
	Total Function: 6021 - Finance:	**552.99**	**0.00**	**1,672.28**	**0.00**	**0.00**	**0.00**	**0.00%**
Function: 6025 - HR								
Expense								
148.6025.5600.000	OPERATING SUPPLIES	842.35	0.00	0.00	0.00	0.00	0.00	0.00%
	Total Expense:	**842.35**	**0.00**	**0.00**	**0.00**	**0.00**	**0.00**	**0.00%**
	Total Function: 6025 - HR:	**842.35**	**0.00**	**0.00**	**0.00**	**0.00**	**0.00**	**0.00%**
Function: 6050 - City Hall & Gen Buildings								
Revenue								
148.6050.4310.000	FED OPERATING GRANT	10,556.73	7,500.00	8,121.47	8,122.00	12,435.00	4,313.00	53.10%
148.6050.4330.000	STATE OPER GRANT	0.00	1,000.00	0.00	0.00	1,000.00	1,000.00	0.00%
	Total Revenue:	**10,556.73**	**8,500.00**	**8,121.47**	**8,122.00**	**13,435.00**	**5,313.00**	**65.41%**

Budget Comparison Report

Account Number		2021-2022 Total Activity	2022-2023 Total Budget	2022-2023 YTD Activity Through Feb	Parent Budget 2022-2023 FY2023 Amend	Comparison 1 Budget 2023-2024 FY2024 Dept Request	Comparison 1 to Parent Budget Increase / (Decrease)	%
Expense								
148.6050.5600.000	OPERATING SUPPLIES	0.00	0.00	180.24	500.00	0.00	-500.00	-100.00%
	Total Expense:	**0.00**	**0.00**	**180.24**	**500.00**	**0.00**	**-500.00**	**-100.00%**
	Total Function: 6050 - City Hall & Gen Buildings:	**10,556.73**	**8,500.00**	**7,941.23**	**7,622.00**	**13,435.00**	**5,813.00**	**76.27%**
Function: 8015 - Sewer & Sewage Disposal								
Expense								
148.8015.5600.000	OPERATING SUPPLIES	25.68	0.00	0.00	0.00	0.00	0.00	0.00%
	Total Expense:	**25.68**	**0.00**	**0.00**	**0.00**	**0.00**	**0.00**	**0.00%**
	Total Function: 8015 - Sewer & Sewage Disposal:	**25.68**	**0.00**	**0.00**	**0.00**	**0.00**	**0.00**	**0.00%**
	Total Fund: 148 - FEMA-COVID19:	**-798.21**	**8,500.00**	**3,754.74**	**2,622.00**	**13,435.00**	**10,813.00**	**412.40%**
Fund: 149 - FEMA - WINDS								
Function: 1010 - Police Operations/Crime Prevention								
Revenue								
149.1010.4310.000	FEMA - FEDERAL GRANT REIM	2,278.85	0.00	0.00	0.00	0.00	0.00	0.00%
149.1010.4330.000	STATE OPER GRANT	0.00	0.00	0.00	0.00	0.00	0.00	0.00%
	Total Revenue:	**2,278.85**	**0.00**	**0.00**	**0.00**	**0.00**	**0.00**	**0.00%**
	Total Function: 1010 - Police Operations/Crime Prevention:	**2,278.85**	**0.00**	**0.00**	**0.00**	**0.00**	**0.00**	**0.00%**
Function: 1050 - Fire Department								
Revenue								
149.1050.4310.000	FEMA - FEDERAL GRANT REIM	8,650.87	0.00	0.00	0.00	0.00	0.00	0.00%
	Total Revenue:	**8,650.87**	**0.00**	**0.00**	**0.00**	**0.00**	**0.00**	**0.00%**
	Total Function: 1050 - Fire Department:	**8,650.87**	**0.00**	**0.00**	**0.00**	**0.00**	**0.00**	**0.00%**
Function: 1075 - Code Enforcement								
Expense								
149.1075.5010.010	REGULAR-NON UNION	173.00	0.00	0.00	0.00	0.00	0.00	0.00%
149.1075.5101.010	SOCIAL SECURITY-NON UNION	10.37	0.00	0.00	0.00	0.00	0.00	0.00%
149.1075.5102.010	MEDICARE-NON UNION	2.43	0.00	0.00	0.00	0.00	0.00	0.00%
149.1075.5111.010	IPERS-NON UNION	16.33	0.00	0.00	0.00	0.00	0.00	0.00%
149.1075.5121.010	GRP INSUR-NON UNION	21.02	0.00	0.00	0.00	0.00	0.00	0.00%
149.1075.5123.010	WORKCOMP-NON UNION	0.15	0.00	0.00	0.00	0.00	0.00	0.00%
	Total Expense:	**223.30**	**0.00**	**0.00**	**0.00**	**0.00**	**0.00**	**0.00%**
	Total Function: 1075 - Code Enforcement:	**223.30**	**0.00**	**0.00**	**0.00**	**0.00**	**0.00**	**0.00%**

Budget Comparison Report

Account Number		2021-2022 Total Activity	2022-2023 Total Budget	2022-2023 YTD Activity Through Feb	Parent Budget 2022-2023 FY2023 Amend	Comparison 1 Budget 2023-2024 FY2024 Dept Request	Comparison 1 to Parent Budget Increase / (Decrease)	%
Function: 1099 - Police and Fire Building Exps								
Revenue								
149.1099.4310.000	FEMA - FEDERAL GRANT REIM	8,821.33	0.00	0.00	0.00	0.00	0.00	0.00%
	Total Revenue:	**8,821.33**	**0.00**	**0.00**	**0.00**	**0.00**	**0.00**	**0.00%**
	Total Function: 1099 - Police and Fire Building Exps:	**8,821.33**	**0.00**	**0.00**	**0.00**	**0.00**	**0.00**	**0.00%**
Function: 2010 - Roads, Bridges, Sidewalks								
Revenue								
149.2010.4310.000	FEMA - FEDERAL GRANT REIM	42,446.43	0.00	3,310,009.85	4,413,347.00	0.00	-4,413,347.00	-100.00%
149.2010.4330.000	STATE OPER GRANT	0.00	0.00	0.00	505,179.00	0.00	-505,179.00	-100.00%
	Total Revenue:	**42,446.43**	**0.00**	**3,310,009.85**	**4,918,526.00**	**0.00**	**-4,918,526.00**	**-100.00%**
Expense								
149.2010.5342.000	CONTRACT-OUTSIDE HELP	340,989.50	0.00	0.00	0.00	0.00	0.00	0.00%
	Total Expense:	**340,989.50**	**0.00**	**0.00**	**0.00**	**0.00**	**0.00**	**0.00%**
	Total Function: 2010 - Roads, Bridges, Sidewalks:	**-298,543.07**	**0.00**	**3,310,009.85**	**4,918,526.00**	**0.00**	**-4,918,526.00**	**-100.00%**
Function: 2060 - Highway Engineering								
Expense								
149.2060.5010.010	REGULAR-NON UNION	121.18	0.00	0.00	0.00	0.00	0.00	0.00%
149.2060.5101.010	SOCIAL SECURITY-NON UNION	6.93	0.00	0.00	0.00	0.00	0.00	0.00%
149.2060.5102.010	MEDICARE-NON UNION	1.62	0.00	0.00	0.00	0.00	0.00	0.00%
149.2060.5111.010	IPERS-NON UNION	11.44	0.00	0.00	0.00	0.00	0.00	0.00%
149.2060.5121.010	GRP INSUR-NON UNION	13.85	0.00	0.00	0.00	0.00	0.00	0.00%
149.2060.5123.010	WORKCOMP-NON UNION	1.33	0.00	0.00	0.00	0.00	0.00	0.00%
	Total Expense:	**156.35**	**0.00**	**0.00**	**0.00**	**0.00**	**0.00**	**0.00%**
	Total Function: 2060 - Highway Engineering:	**156.35**	**0.00**	**0.00**	**0.00**	**0.00**	**0.00**	**0.00%**
Function: 2900 - Other Public Works								
Revenue								
149.2900.4310.600	FEMA - FEDERAL GRANT REIM	5,333.58	0.00	88,717.07	88,717.00	0.00	-88,717.00	-100.00%
149.2900.4330.600	STATE OPER GRANT	0.00	0.00	0.00	9,858.00	0.00	-9,858.00	-100.00%
	Total Revenue:	**5,333.58**	**0.00**	**88,717.07**	**98,575.00**	**0.00**	**-98,575.00**	**-100.00%**
Expense								
149.2900.5331.600	PAYMENTS-OTHER ENTITIES-M	5,333.58	0.00	88,717.07	98,575.00	0.00	-98,575.00	-100.00%
	Total Expense:	**5,333.58**	**0.00**	**88,717.07**	**98,575.00**	**0.00**	**-98,575.00**	**-100.00%**
	Total Function: 2900 - Other Public Works:	**0.00**	**0.00**	**0.00**	**0.00**	**0.00**	**0.00**	**0.00%**
Function: 4030 - Parks								
Expense								
149.4030.5010.010	REGULAR-NON UNION	64.06	0.00	0.00	0.00	0.00	0.00	0.00%

Budget Comparison Report

Account Number		2021-2022 Total Activity	2022-2023 Total Budget	2022-2023 YTD Activity Through Feb	Parent Budget 2022-2023 FY2023 Amend	Comparison 1 Budget 2023-2024 FY2024 Dept Request	Comparison 1 to Parent Budget Increase / (Decrease)	%
149.4030.5101.010	SOCIAL SECURITY-NON UNION	3.87	0.00	0.00	0.00	0.00	0.00	0.00%
149.4030.5102.010	MEDICARE-NON UNION	0.91	0.00	0.00	0.00	0.00	0.00	0.00%
149.4030.5111.010	IPERS-NON UNION	6.05	0.00	0.00	0.00	0.00	0.00	0.00%
149.4030.5121.010	GRP INSUR-NON UNION	9.54	0.00	0.00	0.00	0.00	0.00	0.00%
149.4030.5123.010	WORKCOMP-NON UNION	0.06	0.00	0.00	0.00	0.00	0.00	0.00%
149.4030.5342.000	CONTRACT-OUTSIDE HELP	8,556.99	0.00	0.00	0.00	0.00	0.00	0.00%
	Total Expense:	**8,641.48**	**0.00**	**0.00**	**0.00**	**0.00**	**0.00**	**0.00%**
	Total Function: 4030 - Parks:	**8,641.48**	**0.00**	**0.00**	**0.00**	**0.00**	**0.00**	**0.00%**
Function: 4040 - Recreation								
Expense								
149.4040.5010.010	REGULAR-NON UNION	179.38	0.00	0.00	0.00	0.00	0.00	0.00%
149.4040.5101.010	SOCIAL SECURITY-NON UNION	10.83	0.00	0.00	0.00	0.00	0.00	0.00%
149.4040.5102.010	MEDICARE-NON UNION	2.53	0.00	0.00	0.00	0.00	0.00	0.00%
149.4040.5111.010	IPERS-NON UNION	16.93	0.00	0.00	0.00	0.00	0.00	0.00%
149.4040.5121.010	GRP INSUR-NON UNION	26.70	0.00	0.00	0.00	0.00	0.00	0.00%
149.4040.5123.010	WORKCOMP-NON UNION	0.16	0.00	0.00	0.00	0.00	0.00	0.00%
	Total Expense:	**236.53**	**0.00**	**0.00**	**0.00**	**0.00**	**0.00**	**0.00%**
	Total Function: 4040 - Recreation:	**236.53**	**0.00**	**0.00**	**0.00**	**0.00**	**0.00**	**0.00%**
Function: 5010 - Community Beautification								
Expense								
149.5010.5010.010	REGULAR-NON UNION	12.81	0.00	0.00	0.00	0.00	0.00	0.00%
149.5010.5101.010	SOCIAL SECURITY-NON UNION	0.77	0.00	0.00	0.00	0.00	0.00	0.00%
149.5010.5102.010	MEDICARE-NON UNION	0.18	0.00	0.00	0.00	0.00	0.00	0.00%
149.5010.5111.010	IPERS-NON UNION	1.21	0.00	0.00	0.00	0.00	0.00	0.00%
149.5010.5121.010	GRP INSUR-NON UNION	1.90	0.00	0.00	0.00	0.00	0.00	0.00%
149.5010.5123.010	WORKCOMP-NON UNION	0.01	0.00	0.00	0.00	0.00	0.00	0.00%
	Total Expense:	**16.88**	**0.00**	**0.00**	**0.00**	**0.00**	**0.00**	**0.00%**
	Total Function: 5010 - Community Beautification:	**16.88**	**0.00**	**0.00**	**0.00**	**0.00**	**0.00**	**0.00%**
Function: 5030 - Housing & Urban Renewal								
Expense								
149.5030.5010.010	REGULAR-NON UNION	0.00	0.00	808.38	2,000.00	2,000.00	0.00	0.00%
149.5030.5101.010	SOCIAL SECURITY-NON UNION	0.00	0.00	48.23	124.00	124.00	0.00	0.00%
149.5030.5102.010	MEDICARE-NON UNION	0.00	0.00	11.29	29.00	29.00	0.00	0.00%
149.5030.5111.010	IPERS-NON UNION	0.00	0.00	76.31	189.00	189.00	0.00	0.00%
149.5030.5121.010	GRP INSUR-NON UNION	0.00	0.00	114.84	0.00	0.00	0.00	0.00%

Budget Comparison Report

Account Number		2021-2022 Total Activity	2022-2023 Total Budget	2022-2023 YTD Activity Through Feb	Parent Budget 2022-2023 FY2023 Amend	Comparison 1 Budget 2023-2024 FY2024 Dept Request	Comparison 1 to Parent Budget Increase / (Decrease)	%
149.5030.5123.010	WORKCOMP-NON UNION	0.00	0.00	1.32	3.00	3.00	0.00	0.00%
	Total Expense:	**0.00**	**0.00**	**1,060.37**	**2,345.00**	**2,345.00**	**0.00**	**0.00%**
	Total Function: 5030 - Housing & Urban Renewal:	**0.00**	**0.00**	**1,060.37**	**2,345.00**	**2,345.00**	**0.00**	**0.00%**
Function: 5040 - Planning & Zoning								
Expense								
149.5040.5010.010	REGULAR-NON UNION	0.00	0.00	116.20	0.00	0.00	0.00	0.00%
149.5040.5101.010	SOCIAL SECURITY-NON UNION	0.00	0.00	7.20	0.00	0.00	0.00	0.00%
149.5040.5102.010	MEDICARE-NON UNION	0.00	0.00	1.69	0.00	0.00	0.00	0.00%
149.5040.5111.010	IPERS-NON UNION	0.00	0.00	10.97	0.00	0.00	0.00	0.00%
149.5040.5123.010	WORKCOMP-NON UNION	0.00	0.00	2.28	0.00	0.00	0.00	0.00%
	Total Expense:	**0.00**	**0.00**	**138.34**	**0.00**	**0.00**	**0.00**	**0.00%**
	Total Function: 5040 - Planning & Zoning:	**0.00**	**0.00**	**138.34**	**0.00**	**0.00**	**0.00**	**0.00%**
Function: 6012 - City Administrator/Manager								
Expense								
149.6012.5010.010	REGULAR-NON UNION	4,725.27	0.00	1,850.90	3,000.00	3,000.00	0.00	0.00%
149.6012.5101.010	SOCIAL SECURITY-NON UNION	278.97	0.00	113.45	186.00	186.00	0.00	0.00%
149.6012.5102.010	MEDICARE-NON UNION	67.87	0.00	26.54	44.00	44.00	0.00	0.00%
149.6012.5111.010	IPERS-NON UNION	436.67	0.00	172.73	283.00	283.00	0.00	0.00%
149.6012.5121.010	GRP INSUR-NON UNION	167.06	0.00	69.67	0.00	0.00	0.00	0.00%
149.6012.5123.010	WORKCOMP-NON UNION	4.20	0.00	3.03	5.00	5.00	0.00	0.00%
	Total Expense:	**5,680.04**	**0.00**	**2,236.32**	**3,518.00**	**3,518.00**	**0.00**	**0.00%**
	Total Function: 6012 - City Administrator/Manager:	**5,680.04**	**0.00**	**2,236.32**	**3,518.00**	**3,518.00**	**0.00**	**0.00%**
Function: 6021 - Finance								
Expense								
149.6021.5010.010	REGULAR-NON UNION	58.15	0.00	374.25	2,000.00	2,000.00	0.00	0.00%
149.6021.5101.010	SOCIAL SECURITY-NON UNION	3.44	0.00	22.12	124.00	124.00	0.00	0.00%
149.6021.5102.010	MEDICARE-NON UNION	0.80	0.00	5.17	29.00	29.00	0.00	0.00%
149.6021.5111.010	IPERS-NON UNION	5.49	0.00	35.33	189.00	189.00	0.00	0.00%
149.6021.5121.010	GRP INSUR-NON UNION	6.92	0.00	48.11	0.00	0.00	0.00	0.00%
149.6021.5123.010	WORKCOMP-NON UNION	0.05	0.00	0.62	3.00	3.00	0.00	0.00%
	Total Expense:	**74.85**	**0.00**	**485.60**	**2,345.00**	**2,345.00**	**0.00**	**0.00%**
	Total Function: 6021 - Finance:	**74.85**	**0.00**	**485.60**	**2,345.00**	**2,345.00**	**0.00**	**0.00%**

Budget Comparison Report

Account Number		2021-2022 Total Activity	2022-2023 Total Budget	2022-2023 YTD Activity Through Feb	Parent Budget 2022-2023 FY2023 Amend	Comparison 1 Budget 2023-2024 FY2024 Dept Request	Comparison 1 to Parent Budget Increase / (Decrease)	%
Function: 6050 - City Hall & Gen Buildings								
Revenue								
149.6050.4310.000	FEMA - FEDERAL GRANT REIM	3,312.58	0.00	0.00	0.00	0.00	0.00	0.00%
	Total Revenue:	**3,312.58**	**0.00**	**0.00**	**0.00**	**0.00**	**0.00**	**0.00%**
	Total Function: 6050 - City Hall & Gen Buildings:	**3,312.58**	**0.00**	**0.00**	**0.00**	**0.00**	**0.00**	**0.00%**
Function: 6051 - Carnegie Bldg								
Revenue								
149.6051.4310.000	FEMA - FEDERAL GRANT REIM	4,708.80	0.00	0.00	0.00	0.00	0.00	0.00%
	Total Revenue:	**4,708.80**	**0.00**	**0.00**	**0.00**	**0.00**	**0.00**	**0.00%**
	Total Function: 6051 - Carnegie Bldg:	**4,708.80**	**0.00**	**0.00**	**0.00**	**0.00**	**0.00**	**0.00%**
Function: 6900 - Other Gen Gov								
Revenue								
149.6900.4310.000	FEMA - FEDERAL GRANT REIM	0.00	0.00	0.00	0.00	58,500.00	58,500.00	0.00%
149.6900.4330.000	STATE OPER GRANT	0.00	0.00	0.00	0.00	6,500.00	6,500.00	0.00%
	Total Revenue:	**0.00**	**0.00**	**0.00**	**0.00**	**65,000.00**	**65,000.00**	**0.00%**
	Total Function: 6900 - Other Gen Gov:	**0.00**	**0.00**	**0.00**	**0.00**	**65,000.00**	**65,000.00**	**0.00%**
Function: 8015 - Sewer & Sewage Disposal								
Expense								
149.8015.5010.010	REGULAR-NON UNION	342.04	0.00	0.00	0.00	0.00	0.00	0.00%
149.8015.5101.010	SOCIAL SECURITY-NON UNION	21.01	0.00	0.00	0.00	0.00	0.00	0.00%
149.8015.5102.010	MEDICARE-NON UNION	4.91	0.00	0.00	0.00	0.00	0.00	0.00%
149.8015.5111.010	IPERS-NON UNION	31.60	0.00	0.00	0.00	0.00	0.00	0.00%
149.8015.5121.010	GRP INSUR-NON UNION	12.51	0.00	0.00	0.00	0.00	0.00	0.00%
149.8015.5123.010	WORKCOMP-NON UNION	0.31	0.00	0.00	0.00	0.00	0.00	0.00%
	Total Expense:	**412.38**	**0.00**	**0.00**	**0.00**	**0.00**	**0.00**	**0.00%**
	Total Function: 8015 - Sewer & Sewage Disposal:	**412.38**	**0.00**	**0.00**	**0.00**	**0.00**	**0.00**	**0.00%**
Function: 8016 - Sanitary Sewer								
Revenue								
149.8016.4310.000	FEMA - FEDERAL GRANT REIM	55,588.48	0.00	0.00	0.00	0.00	0.00	0.00%
	Total Revenue:	**55,588.48**	**0.00**	**0.00**	**0.00**	**0.00**	**0.00**	**0.00%**
	Total Function: 8016 - Sanitary Sewer:	**55,588.48**	**0.00**	**0.00**	**0.00**	**0.00**	**0.00**	**0.00%**
Function: 8065 - Storm Water								
Revenue								
149.8065.4310.000	FEMA - FEDERAL GRANT REIM	2,130.14	0.00	0.00	0.00	0.00	0.00	0.00%
	Total Revenue:	**2,130.14**	**0.00**	**0.00**	**0.00**	**0.00**	**0.00**	**0.00%**

Budget Comparison Report

Account Number		2021-2022 Total Activity	2022-2023 Total Budget	2022-2023 YTD Activity Through Feb	Parent Budget 2022-2023 FY2023 Amend	Comparison 1 Budget 2023-2024 FY2024 Dept Request	Comparison 1 to Parent Budget Increase / (Decrease)	%
Expense								
149.8065.5010.010	REGULAR-NON UNION	56.56	0.00	0.00	0.00	0.00	0.00	0.00%
149.8065.5101.010	SOCIAL SECURITY-NON UNION	3.47	0.00	0.00	0.00	0.00	0.00	0.00%
149.8065.5102.010	MEDICARE-NON UNION	0.80	0.00	0.00	0.00	0.00	0.00	0.00%
149.8065.5111.010	IPERS-NON UNION	5.23	0.00	0.00	0.00	0.00	0.00	0.00%
149.8065.5121.010	GRP INSUR-NON UNION	2.01	0.00	0.00	0.00	0.00	0.00	0.00%
149.8065.5123.010	WORKCOMP-NON UNION	0.05	0.00	0.00	0.00	0.00	0.00	0.00%
	Total Expense:	**68.12**	**0.00**	**0.00**	**0.00**	**0.00**	**0.00**	**0.00%**
	Total Function: 8065 - Storm Water:	**2,062.02**	**0.00**	**0.00**	**0.00**	**0.00**	**0.00**	**0.00%**
Function: 9000 - 9000								
Revenue								
149.9000.6500.001	TRANSFER IN - GEN FUND	4,558.93	0.00	0.00	0.00	0.00	0.00	0.00%
149.9000.6500.121	TR FRM LOCAL OPTION	0.00	0.00	0.00	0.00	0.00	0.00	0.00%
	Total Revenue:	**4,558.93**	**0.00**	**0.00**	**0.00**	**0.00**	**0.00**	**0.00%**
Expense								
149.9000.7500.130	TRANSFER OUT - FUND 130	0.00	0.00	614.96	615.00	0.00	-615.00	-100.00%
	Total Expense:	**0.00**	**0.00**	**614.96**	**615.00**	**0.00**	**-615.00**	**-100.00%**
	Total Function: 9000 - 9000:	**4,558.93**	**0.00**	**-614.96**	**-615.00**	**0.00**	**615.00**	**-100.00%**
	Total Fund: 149 - FEMA - WINDS:	**-224,003.02**	**0.00**	**3,305,474.26**	**4,909,703.00**	**56,792.00**	**-4,852,911.00**	**-98.84%**
Fund: 150 - LOCAL PD GRANTS								
Function: 1010 - Police Operations/Crime Prevention								
Revenue								
150.1010.4350.000	LOCAL/COUNTY GRANTS	41,967.92	55,000.00	38,656.12	55,000.00	60,000.00	5,000.00	9.09%
	Total Revenue:	**41,967.92**	**55,000.00**	**38,656.12**	**55,000.00**	**60,000.00**	**5,000.00**	**9.09%**
Expense								
150.1010.5010.020	REGULAR-POLICE UNION	45,255.44	37,838.00	37,606.01	34,125.00	60,000.00	25,875.00	75.82%
150.1010.5020.020	OVERTIME-POLICE UNION	0.00	0.00	188.34	0.00	0.00	0.00	0.00%
150.1010.5102.020	MEDICARE-POLICE UNION	-35.08	549.00	181.91	495.00	0.00	-495.00	-100.00%
150.1010.5113.020	RETIREMENT-POLICE UNION	-601.43	9,043.00	2,702.78	8,156.00	0.00	-8,156.00	-100.00%
150.1010.5121.020	GRP INSUR-POLICE UNION	-548.49	7,688.00	2,817.60	8,084.00	0.00	-8,084.00	-100.00%
150.1010.5123.020	WORKCOMP-POLICE UNION	-35.23	530.00	185.51	478.00	0.00	-478.00	-100.00%
150.1010.5703.000	MINOR COMPUTER	0.00	67.00	0.00	67.00	0.00	-67.00	-100.00%
	Total Expense:	**44,035.21**	**55,715.00**	**43,682.15**	**51,405.00**	**60,000.00**	**8,595.00**	**16.72%**
	Total Function: 1010 - Police Operations/Crime Prevention:	**-2,067.29**	**-715.00**	**-5,026.03**	**3,595.00**	**0.00**	**-3,595.00**	**-100.00%**
	Total Fund: 150 - LOCAL PD GRANTS:	**-2,067.29**	**-715.00**	**-5,026.03**	**3,595.00**	**0.00**	**-3,595.00**	**-100.00%**

Budget Comparison Report

Account Number		2021-2022 Total Activity	2022-2023 Total Budget	2022-2023 YTD Activity Through Feb	Parent Budget 2022-2023 FY2023 Amend	Comparison 1 Budget 2023-2024 FY2024 Dept Request	Comparison 1 to Parent Budget Increase / (Decrease)	%
Fund: 151 - DEPT OF JUSTICE GRANTS								
Function: 1010 - Police Operations/Crime Prevention								
Revenue								
151.1010.4310.000	POLICE FED OPER GRNT/REIMI	15,971.19	109,560.00	37,290.12	142,250.00	40,560.00	-101,690.00	-71.49%
151.1010.4315.000	POLICE FED CAP GRT	15,146.51	16,240.00	16,240.00	16,240.00	16,240.00	0.00	0.00%
	Total Revenue:	**31,117.70**	**125,800.00**	**53,530.12**	**158,490.00**	**56,800.00**	**-101,690.00**	**-64.16%**
Expense								
151.1010.5230.000	CONSULTING & PROF FEES	39,902.65	105,000.00	52,516.48	103,000.00	36,000.00	-67,000.00	-65.05%
151.1010.5331.000	PAYMENTS-OTHER ENTITIES	8,013.50	8,120.00	8,120.00	8,120.00	8,120.00	0.00	0.00%
151.1010.5600.000	OPERATING SUPPLIES	0.00	0.00	0.00	0.00	0.00	0.00	0.00%
151.1010.5718.000	MINOR EQUIP, UNCLASSFIED	6,841.50	10,400.00	15,763.95	15,010.00	12,680.00	-2,330.00	-15.52%
	Total Expense:	**54,757.65**	**123,520.00**	**76,400.43**	**126,130.00**	**56,800.00**	**-69,330.00**	**-54.97%**
Total Function: 1010 - Police Operations/Crime Prevention:		**-23,639.95**	**2,280.00**	**-22,870.31**	**32,360.00**	**0.00**	**-32,360.00**	**-100.00%**
Total Fund: 151 - DEPT OF JUSTICE GRANTS:		**-23,639.95**	**2,280.00**	**-22,870.31**	**32,360.00**	**0.00**	**-32,360.00**	**-100.00%**
Fund: 152 - POLICE UNDESIGNATED GRANTS								
Function: 1010 - Police Operations/Crime Prevention								
Revenue								
152.1010.4310.000	POLICE FED OPER GRNT/REIMI	83,571.05	91,979.00	66,831.20	121,205.00	89,507.00	-31,698.00	-26.15%
152.1010.4326.000	STATE REIMB	19,468.19	20,000.00	21,665.47	21,666.00	20,000.00	-1,666.00	-7.69%
	Total Revenue:	**103,039.24**	**111,979.00**	**88,496.67**	**142,871.00**	**109,507.00**	**-33,364.00**	**-23.35%**
Expense								
152.1010.5010.020	REGULAR-POLICE UNION	66,596.92	69,007.00	52,378.85	69,007.00	69,007.00	0.00	0.00%
152.1010.5021.010	EXTRA DUTY-NON UNION	96.00	3,000.00	204.00	3,000.00	3,000.00	0.00	0.00%
152.1010.5021.020	EXTRA DUTY-POLICE UNION	3,645.16	13,000.00	4,330.86	13,000.00	13,000.00	0.00	0.00%
152.1010.5102.020	MEDICARE-POLICE UNION	0.00	0.00	156.03	0.00	0.00	0.00	0.00%
152.1010.5113.020	RETIREMENT-POLICE UNION	0.00	0.00	2,263.84	0.00	0.00	0.00	0.00%
152.1010.5121.020	GRP INSUR-POLICE UNION	56.02	0.00	1,047.27	0.00	0.00	0.00	0.00%
152.1010.5123.020	WORKCOMP-POLICE UNION	0.00	0.00	153.38	0.00	0.00	0.00	0.00%
152.1010.5230.000	CONSULTING & PROF FEES	32,871.12	20,000.00	8,262.54	8,263.00	20,000.00	11,737.00	142.04%
152.1010.5280.000	DUES, MEMBER, SUBSCRIPTN	192.00	0.00	128.00	250.00	0.00	-250.00	-100.00%
152.1010.5342.000	CONTRACT-OUTSIDE HELP	1,535.50	0.00	0.00	6,979.00	0.00	-6,979.00	-100.00%
152.1010.5465.000	TRAVEL - HOTEL/MOTEL	0.00	0.00	0.00	370.00	0.00	-370.00	-100.00%
152.1010.5600.000	OPERATING SUPPLIES	955.86	0.00	0.00	0.00	0.00	0.00	0.00%
152.1010.5718.000	MINOR EQUIP, UNCLASSFIED	4,245.00	4,500.00	0.00	5,460.00	4,500.00	-960.00	-17.58%
152.1010.5750.000	OTHER CAP EQUIP > $5,000	8,937.50	0.00	0.00	0.00	0.00	0.00	0.00%
	Total Expense:	**119,131.08**	**109,507.00**	**68,924.77**	**106,329.00**	**109,507.00**	**3,178.00**	**2.99%**
Total Function: 1010 - Police Operations/Crime Prevention:		**-16,091.84**	**2,472.00**	**19,571.90**	**36,542.00**	**0.00**	**-36,542.00**	**-100.00%**

Budget Comparison Report

Account Number		2021-2022 Total Activity	2022-2023 Total Budget	2022-2023 YTD Activity Through Feb	Parent Budget 2022-2023 FY2023 Amend	Comparison 1 Budget 2023-2024 FY2024 Dept Request	Comparison 1 to Parent Budget Increase / (Decrease)	%
Function: 9000 - 9000								
Expense								
152.9000.7500.001	TRANSFER OUT - FUND 001	20.00	0.00	0.00	0.00	0.00	0.00	0.00%
152.9000.7500.153	TRANSFER OUT - FUND 153	2,694.00	0.00	0.00	0.00	0.00	0.00	0.00%
	Total Expense:	**2,714.00**	**0.00**	**0.00**	**0.00**	**0.00**	**0.00**	**0.00%**
	Total Function: 9000 - 9000:	**2,714.00**	**0.00**	**0.00**	**0.00**	**0.00**	**0.00**	**0.00%**
	Total Fund: 152 - POLICE UNDESIGNATED GRANTS:	**-18,805.84**	**2,472.00**	**19,571.90**	**36,542.00**	**0.00**	**-36,542.00**	**-100.00%**
Fund: 153 - POLICE DEPT DONATION FUND								
Function: 1010 - Police Operations/Crime Prevention								
Revenue								
153.1010.4820.000	POLICE DEPT CONTRIBS	6,387.49	2,000.00	2,566.50	5,000.00	2,000.00	-3,000.00	-60.00%
	Total Revenue:	**6,387.49**	**2,000.00**	**2,566.50**	**5,000.00**	**2,000.00**	**-3,000.00**	**-60.00%**
Expense								
153.1010.5215.000	BANK CHARGES	0.00	0.00	4.00	10.00	0.00	-10.00	-100.00%
153.1010.5230.000	CONSULTING & PROF FEES	88.50	0.00	320.00	320.00	400.00	80.00	25.00%
153.1010.5280.000	DUES, MEMBER, SUBSCRIPTN	190.00	200.00	168.00	200.00	200.00	0.00	0.00%
153.1010.5321.000	K9 EXPENSES	17,464.02	0.00	1,144.01	1,500.00	2,000.00	500.00	33.33%
153.1010.5370.000	PRINTING & BINDING	225.00	0.00	0.00	0.00	0.00	0.00	0.00%
153.1010.5460.000	CONFERENCE EXPENSE	644.00	20,000.00	180.00	20,000.00	20,000.00	0.00	0.00%
153.1010.5464.000	TRAVEL - PER DIEM	891.05	250.00	21.12	250.00	250.00	0.00	0.00%
153.1010.5465.000	TRAVEL - HOTEL/MOTEL	5,779.20	1,500.00	369.60	1,500.00	1,500.00	0.00	0.00%
153.1010.5570.000	VEHICLE GAS	2,293.27	500.00	53.15	500.00	500.00	0.00	0.00%
153.1010.5600.000	OPERATING SUPPLIES	4,164.08	2,500.00	2,829.13	5,000.00	2,500.00	-2,500.00	-50.00%
153.1010.5601.000	PROMOTION/PROGRAM SPPL\	864.19	2,500.00	0.00	2,500.00	2,500.00	0.00	0.00%
153.1010.5718.000	MINOR EQUIP, UNCLASSFIED	0.00	1,000.00	0.00	1,000.00	1,000.00	0.00	0.00%
	Total Expense:	**32,603.31**	**28,450.00**	**5,089.01**	**32,780.00**	**30,850.00**	**-1,930.00**	**-5.89%**
	Total Function: 1010 - Police Operations/Crime Prevention:	**-26,215.82**	**-26,450.00**	**-2,522.51**	**-27,780.00**	**-28,850.00**	**-1,070.00**	**3.85%**
Function: 6021 - Finance								
Revenue								
153.6021.4610.000	INTEREST ON INVESTMENTS	651.94	700.00	732.87	1,200.00	1,200.00	0.00	0.00%
	Total Revenue:	**651.94**	**700.00**	**732.87**	**1,200.00**	**1,200.00**	**0.00**	**0.00%**
	Total Function: 6021 - Finance:	**651.94**	**700.00**	**732.87**	**1,200.00**	**1,200.00**	**0.00**	**0.00%**

Budget Comparison Report

Account Number		2021-2022 Total Activity	2022-2023 Total Budget	2022-2023 YTD Activity Through Feb	Parent Budget 2022-2023 FY2023 Amend	Comparison 1 Budget 2023-2024 FY2024 Dept Request	Comparison 1 to Parent Budget Increase / (Decrease)	%
Function: 9000 - 9000								
Revenue								
153.9000.6500.152	TRANSFER IN - FUND 152	2,694.00	0.00	0.00	0.00	0.00	0.00	0.00%
	Total Revenue:	**2,694.00**	**0.00**	**0.00**	**0.00**	**0.00**	**0.00**	**0.00%**
	Total Function: 9000 - 9000:	**2,694.00**	**0.00**	**0.00**	**0.00**	**0.00**	**0.00**	**0.00%**
	Total Fund: 153 - POLICE DEPT DONATION FUND:	**-22,869.88**	**-25,750.00**	**-1,789.64**	**-26,580.00**	**-27,650.00**	**-1,070.00**	**4.03%**
Fund: 156 - FIRE DEPT DONATION FUND								
Function: 1050 - Fire Department								
Revenue								
156.1050.4820.000	FIRE DEPT CONTRIBS	3,240.00	2,000.00	6,757.00	6,750.00	2,000.00	-4,750.00	-70.37%
156.1050.4875.000	RFNDS/REIMB	47.48	0.00	0.00	0.00	0.00	0.00	0.00%
	Total Revenue:	**3,287.48**	**2,000.00**	**6,757.00**	**6,750.00**	**2,000.00**	**-4,750.00**	**-70.37%**
Expense								
156.1050.5410.000	REPAIRS & MAINTENANCE	0.00	7,000.00	0.00	7,000.00	7,000.00	0.00	0.00%
156.1050.5413.000	VEHICLE REPAIRS & MAINTEN/	2,545.00	0.00	673.00	2,000.00	0.00	-2,000.00	-100.00%
156.1050.5565.000	VEHICLE OPER/MAINT SPPLY	3,941.26	0.00	0.00	0.00	0.00	0.00	0.00%
156.1050.5600.000	OPERATING SUPPLIES	9,113.93	0.00	123.71	500.00	0.00	-500.00	-100.00%
156.1050.5630.000	EMS SUPPLIES	0.00	0.00	4,040.52	0.00	0.00	0.00	0.00%
156.1050.5718.000	MINOR EQUIP, UNCLASSFIED	10,245.43	0.00	17,573.49	20,000.00	10,000.00	-10,000.00	-50.00%
	Total Expense:	**25,845.62**	**7,000.00**	**22,410.72**	**29,500.00**	**17,000.00**	**-12,500.00**	**-42.37%**
	Total Function: 1050 - Fire Department:	**-22,558.14**	**-5,000.00**	**-15,653.72**	**-22,750.00**	**-15,000.00**	**7,750.00**	**-34.07%**
Function: 6021 - Finance								
Revenue								
156.6021.4610.000	INTEREST ON INVESTMENTS	657.91	0.00	626.95	1,000.00	1,000.00	0.00	0.00%
	Total Revenue:	**657.91**	**0.00**	**626.95**	**1,000.00**	**1,000.00**	**0.00**	**0.00%**
	Total Function: 6021 - Finance:	**657.91**	**0.00**	**626.95**	**1,000.00**	**1,000.00**	**0.00**	**0.00%**
Function: 9000 - 9000								
Revenue								
156.9000.6500.130	TRANSFER IN - FUND 130	0.00	0.00	0.00	54,124.00	0.00	-54,124.00	-100.00%
156.9000.6500.157	TRANSFER IN - FUND 157	467.19	0.00	0.00	0.00	0.00	0.00	0.00%
	Total Revenue:	**467.19**	**0.00**	**0.00**	**54,124.00**	**0.00**	**-54,124.00**	**-100.00%**

Budget Comparison Report

Account Number		2021-2022 Total Activity	2022-2023 Total Budget	2022-2023 YTD Activity Through Feb	Parent Budget 2022-2023 FY2023 Amend	Comparison 1 Budget 2023-2024 FY2024 Dept Request	Comparison 1 to Parent Budget Increase / (Decrease)	%
Expense								
156.9000.7500.032	TRANSFER OUT - CIP LARGE EC	15,000.00	0.00	0.00	0.00	0.00	0.00	0.00%
	Total Expense:	**15,000.00**	**0.00**	**0.00**	**0.00**	**0.00**	**0.00**	**0.00%**
	Total Function: 9000 - 9000:	**-14,532.81**	**0.00**	**0.00**	**54,124.00**	**0.00**	**-54,124.00**	**-100.00%**
	Total Fund: 156 - FIRE DEPT DONATION FUND:	**-36,433.04**	**-5,000.00**	**-15,026.77**	**32,374.00**	**-14,000.00**	**-46,374.00**	**-143.24%**
Fund: 157 - FIRE DEPT GRANTS								
Function: 6021 - Finance								
Revenue								
157.6021.4610.000	INTEREST ON INVESTMENTS	42.40	60.00	0.00	0.00	0.00	0.00	0.00%
	Total Revenue:	**42.40**	**60.00**	**0.00**	**0.00**	**0.00**	**0.00**	**0.00%**
	Total Function: 6021 - Finance:	**42.40**	**60.00**	**0.00**	**0.00**	**0.00**	**0.00**	**0.00%**
Function: 9000 - 9000								
Expense								
157.9000.7500.156	TRANSFER OUT - FUND 156	467.19	0.00	0.00	0.00	0.00	0.00	0.00%
157.9000.7500.300	TRANSFER OUT - FUIND 300	4,500.00	0.00	0.00	0.00	0.00	0.00	0.00%
	Total Expense:	**4,967.19**	**0.00**	**0.00**	**0.00**	**0.00**	**0.00**	**0.00%**
	Total Function: 9000 - 9000:	**4,967.19**	**0.00**	**0.00**	**0.00**	**0.00**	**0.00**	**0.00%**
	Total Fund: 157 - FIRE DEPT GRANTS:	**-4,924.79**	**60.00**	**0.00**	**0.00**	**0.00**	**0.00**	**0.00%**
Fund: 160 - ECONOMIC DEVELOPMENT GIFT								
Function: 6021 - Finance								
Revenue								
160.6021.4610.000	INTEREST ON INVESTMENTS	505.62	350.00	580.03	900.00	1,000.00	100.00	11.11%
	Total Revenue:	**505.62**	**350.00**	**580.03**	**900.00**	**1,000.00**	**100.00**	**11.11%**
	Total Function: 6021 - Finance:	**505.62**	**350.00**	**580.03**	**900.00**	**1,000.00**	**100.00**	**11.11%**
	Total Fund: 160 - ECONOMIC DEVELOPMENT GIFT:	**505.62**	**350.00**	**580.03**	**900.00**	**1,000.00**	**100.00**	**11.11%**
Fund: 161 - SURETY DEPOSITS/SUBDIVIDER								
Function: 6021 - Finance								
Revenue								
161.6021.4610.000	INTEREST ON INVESTMENTS	105.50	185.00	121.00	185.00	185.00	0.00	0.00%
	Total Revenue:	**105.50**	**185.00**	**121.00**	**185.00**	**185.00**	**0.00**	**0.00%**
	Total Function: 6021 - Finance:	**105.50**	**185.00**	**121.00**	**185.00**	**185.00**	**0.00**	**0.00%**
	Total Fund: 161 - SURETY DEPOSITS/SUBDIVIDER:	**105.50**	**185.00**	**121.00**	**185.00**	**185.00**	**0.00**	**0.00%**

Budget Comparison Report

Account Number		2021-2022 Total Activity	2022-2023 Total Budget	2022-2023 YTD Activity Through Feb	Parent Budget 2022-2023 FY2023 Amend	Comparison 1 Budget 2023-2024 FY2024 Dept Request	Comparison 1 to Parent Budget Increase / (Decrease)	%
Fund: 170 - LIBRARY DONATION FUND								
Function: 4010 - Library Services								
Revenue								
170.4010.4315.000	FED CAP GRANT	0.00	0.00	5,000.00	5,000.00	0.00	-5,000.00	-100.00%
170.4010.4820.000	LIBRARY DONATIONS	24,871.66	105,000.00	40,566.13	160,747.00	820,000.00	659,253.00	410.12%
170.4010.4822.000	LIBRARY GENELOGY DONATNS	206.40	75.00	30.00	75.00	75.00	0.00	0.00%
170.4010.4823.000	MEMORIAL BOOK DONATIONS	3,095.93	900.00	1,087.31	2,000.00	2,000.00	0.00	0.00%
170.4010.4875.000	RFNDS/REIMB: LIBRARY	40.13	0.00	0.00	0.00	0.00	0.00	0.00%
	Total Revenue:	**28,214.12**	**105,975.00**	**46,683.44**	**167,822.00**	**822,075.00**	**654,253.00**	**389.85%**
Expense								
170.4010.5230.000	CONSULTING & PROF FEES	3,275.00	0.00	3,275.00	0.00	0.00	0.00	0.00%
170.4010.5370.000	PRINTING & BINDING	0.00	0.00	135.00	200.00	0.00	-200.00	-100.00%
170.4010.5450.000	TELEPHONE/OTHER COMMNC	0.00	0.00	1,912.80	2,000.00	0.00	-2,000.00	-100.00%
170.4010.5600.000	OPERATING SUPPLIES	0.00	1,500.00	0.00	1,500.00	1,500.00	0.00	0.00%
170.4010.5601.000	PROMOTION/PROGRAM SPPL\	5,182.39	10,000.00	3,677.86	10,000.00	10,000.00	0.00	0.00%
170.4010.5612.000	COMPUTER COMPONENTS	0.00	1,100.00	0.00	1,100.00	1,100.00	0.00	0.00%
170.4010.5718.000	MINOR EQUIP, UNCLASSFIED	0.00	90.00	0.00	90.00	90.00	0.00	0.00%
170.4010.5731.000	LIBRARY PERIODICALS	0.00	50.00	0.00	50.00	50.00	0.00	0.00%
170.4010.5732.000	LIBRARY BOOKS, FILM RCRD	8,048.73	20,000.00	5,032.11	20,000.00	20,000.00	0.00	0.00%
170.4010.5734.000	MEMORIAL BOOKS	2,621.80	2,000.00	835.43	2,000.00	2,000.00	0.00	0.00%
170.4010.5736.000	LIBRARY DATABASES	460.55	0.00	0.00	0.00	0.00	0.00	0.00%
170.4010.5750.000	OTHER CAP EQUIP > $5,000	0.00	40,747.00	0.00	40,747.00	0.00	-40,747.00	-100.00%
170.4010.5776.000	BUILDINGS & IMPROVEMENTS	0.00	75,000.00	0.00	100,000.00	800,000.00	700,000.00	700.00%
170.4010.5980.000	REFUNDS/REIMB	250.00	0.00	0.00	0.00	0.00	0.00	0.00%
	Total Expense:	**19,838.47**	**150,487.00**	**14,868.20**	**177,687.00**	**834,740.00**	**657,053.00**	**369.78%**
	Total Function: 4010 - Library Services:	**8,375.65**	**-44,512.00**	**31,815.24**	**-9,865.00**	**-12,665.00**	**-2,800.00**	**28.38%**
Function: 6021 - Finance								
Revenue								
170.6021.4610.000	INTEREST ON INVESTMENTS	1,137.27	1,300.00	1,365.75	2,400.00	2,400.00	0.00	0.00%
	Total Revenue:	**1,137.27**	**1,300.00**	**1,365.75**	**2,400.00**	**2,400.00**	**0.00**	**0.00%**
	Total Function: 6021 - Finance:	**1,137.27**	**1,300.00**	**1,365.75**	**2,400.00**	**2,400.00**	**0.00**	**0.00%**
Function: 9000 - 9000								
Revenue								
170.9000.6500.130	TRANSFER IN - FUIND 130	0.00	0.00	0.00	3,091.00	0.00	-3,091.00	-100.00%
	Total Revenue:	**0.00**	**0.00**	**0.00**	**3,091.00**	**0.00**	**-3,091.00**	**-100.00%**
	Total Function: 9000 - 9000:	**0.00**	**0.00**	**0.00**	**3,091.00**	**0.00**	**-3,091.00**	**-100.00%**
	Total Fund: 170 - LIBRARY DONATION FUND:	**9,512.92**	**-43,212.00**	**33,180.99**	**-4,374.00**	**-10,265.00**	**-5,891.00**	**134.68%**

Budget Comparison Report

Account Number		2021-2022 Total Activity	2022-2023 Total Budget	2022-2023 YTD Activity Through Feb	Parent Budget 2022-2023 FY2023 Amend	Comparison 1 Budget 2023-2024 FY2024 Dept Request	Comparison 1 to Parent Budget Increase / (Decrease)	%
Fund: 177 - SEIZED ASSETS (POLICE)								
Function: 1010 - Police Operations/Crime Prevention								
Revenue								
177.1010.4820.000	$ SEIZED/ABANDONED ASSETS	6,409.00	3,000.00	1,000.00	3,000.00	3,000.00	0.00	0.00%
	Total Revenue:	**6,409.00**	**3,000.00**	**1,000.00**	**3,000.00**	**3,000.00**	**0.00**	**0.00%**
Expense								
177.1010.5331.000	PAYMENTS-OTHER ENTITIES	1,061.00	1,000.00	220.00	1,000.00	1,000.00	0.00	0.00%
177.1010.5471.000	TRAINING	5,000.00	0.00	0.00	0.00	0.00	0.00	0.00%
177.1010.5600.000	OPERATING SUPPLIES	5,267.93	0.00	0.00	0.00	0.00	0.00	0.00%
177.1010.5704.000	MINOR SOFTWARE	4,200.00	0.00	0.00	0.00	0.00	0.00	0.00%
177.1010.5718.000	MINOR EQUIP, UNCLASSFIED	2,076.00	3,000.00	2,082.59	3,000.00	3,000.00	0.00	0.00%
	Total Expense:	**17,604.93**	**4,000.00**	**2,302.59**	**4,000.00**	**4,000.00**	**0.00**	**0.00%**
Total Function: 1010 - Police Operations/Crime Prevention:		**-11,195.93**	**-1,000.00**	**-1,302.59**	**-1,000.00**	**-1,000.00**	**0.00**	**0.00%**
Function: 6021 - Finance								
Revenue								
177.6021.4610.000	INTEREST ON INVESTMENTS	369.97	250.00	330.42	500.00	500.00	0.00	0.00%
	Total Revenue:	**369.97**	**250.00**	**330.42**	**500.00**	**500.00**	**0.00**	**0.00%**
	Total Function: 6021 - Finance:	**369.97**	**250.00**	**330.42**	**500.00**	**500.00**	**0.00**	**0.00%**
Total Fund: 177 - SEIZED ASSETS (POLICE):		**-10,825.96**	**-750.00**	**-972.17**	**-500.00**	**-500.00**	**0.00**	**0.00%**
Fund: 179 - OTHER COMM AND ECON DEVELOPMENT								
Function: 6021 - Finance								
Revenue								
179.6021.4610.000	INTEREST ON INVESTMENTS	681.40	0.00	0.00	0.00	0.00	0.00	0.00%
	Total Revenue:	**681.40**	**0.00**	**0.00**	**0.00**	**0.00**	**0.00**	**0.00%**
	Total Function: 6021 - Finance:	**681.40**	**0.00**	**0.00**	**0.00**	**0.00**	**0.00**	**0.00%**
Function: 9000 - 9000								
Expense								
179.9000.7500.189	TRANSFER OUT - LEAD GRANT	79,839.36	0.00	0.00	0.00	0.00	0.00	0.00%
	Total Expense:	**79,839.36**	**0.00**	**0.00**	**0.00**	**0.00**	**0.00**	**0.00%**
	Total Function: 9000 - 9000:	**79,839.36**	**0.00**	**0.00**	**0.00**	**0.00**	**0.00**	**0.00%**
Total Fund: 179 - OTHER COMM AND ECON DEVELOPMENT:		**-79,157.96**	**0.00**	**0.00**	**0.00**	**0.00**	**0.00**	**0.00%**

Budget Comparison Report

Account Number		2021-2022 Total Activity	2022-2023 Total Budget	2022-2023 YTD Activity Through Feb	Parent Budget 2022-2023 FY2023 Amend	Comparison 1 Budget 2023-2024 FY2024 Dept Request	Comparison 1 to Parent Budget Increase / (Decrease)	%
Fund: 180 - HOUSING GRANTS								
Function: 6021 - Finance								
Revenue								
180.6021.4610.000	INTEREST ON INVESTMENTS	239.59	0.00	0.00	0.00	0.00	0.00	0.00%
	Total Revenue:	**239.59**	**0.00**	**0.00**	**0.00**	**0.00**	**0.00**	**0.00%**
	Total Function: 6021 - Finance:	**239.59**	**0.00**	**0.00**	**0.00**	**0.00**	**0.00**	**0.00%**
Function: 9000 - 9000								
Expense								
180.9000.7500.189	TRANSFER OUT - LEAD #6	28,073.24	0.00	0.00	0.00	0.00	0.00	0.00%
	Total Expense:	**28,073.24**	**0.00**	**0.00**	**0.00**	**0.00**	**0.00**	**0.00%**
	Total Function: 9000 - 9000:	**28,073.24**	**0.00**	**0.00**	**0.00**	**0.00**	**0.00**	**0.00%**
	Total Fund: 180 - HOUSING GRANTS:	**-27,833.65**	**0.00**	**0.00**	**0.00**	**0.00**	**0.00**	**0.00%**
Fund: 183 - FY 08 EDI (ECON DEV INCENTIVE)								
Function: 5020 - Economic Development								
Revenue								
183.5020.4960.000	SALE OF F.A.	0.00	0.00	1,025.00	1,025.00	0.00	-1,025.00	-100.00%
	Total Revenue:	**0.00**	**0.00**	**1,025.00**	**1,025.00**	**0.00**	**-1,025.00**	**-100.00%**
	Total Function: 5020 - Economic Development:	**0.00**	**0.00**	**1,025.00**	**1,025.00**	**0.00**	**-1,025.00**	**-100.00%**
Function: 9000 - 9000								
Revenue								
183.9000.6500.121	TRANSFER IN - LOST	0.00	0.00	0.00	12,364.00	0.00	-12,364.00	-100.00%
	Total Revenue:	**0.00**	**0.00**	**0.00**	**12,364.00**	**0.00**	**-12,364.00**	**-100.00%**
	Total Function: 9000 - 9000:	**0.00**	**0.00**	**0.00**	**12,364.00**	**0.00**	**-12,364.00**	**-100.00%**
	Total Fund: 183 - FY 08 EDI (ECON DEV INCENTIVE):	**0.00**	**0.00**	**1,025.00**	**13,389.00**	**0.00**	**-13,389.00**	**-100.00%**
Fund: 184 - VOUCHERS - 002, 003								
Function: 5030 - Housing & Urban Renewal								
Revenue								
184.5030.4311.000	HOUSING-FED OPER GRANT	985,896.00	1,043,000.00	717,458.00	1,043,000.00	1,043,000.00	0.00	0.00%
184.5030.4312.000	FED HSNG-ADMIN-HUD	271,931.00	200,000.00	163,668.00	200,000.00	200,000.00	0.00	0.00%
184.5030.4492.000	HOUSING MISC CHRGS	0.00	25.00	0.00	25.00	25.00	0.00	0.00%
184.5030.4611.000	HUD INTEREST-ADMIN	1,521.99	300.00	2,353.68	3,200.00	3,200.00	0.00	0.00%
184.5030.4612.000	HUD INTEREST - HAP	78.67	150.00	444.22	600.00	600.00	0.00	0.00%
184.5030.4875.000	RFNDS/REIMB: FRAUD HOUSIN	10,078.94	2,000.00	3,737.00	2,000.00	2,000.00	0.00	0.00%
184.5030.4876.000	MISC REV: OTHER HOUSING	6,364.52	0.00	2,541.52	1,162.00	0.00	-1,162.00	-100.00%
184.5030.4878.000	REFUNDS/REIMBURSMENTS	14.00	155.00	0.00	155.00	155.00	0.00	0.00%
	Total Revenue:	**1,275,885.12**	**1,245,630.00**	**890,202.42**	**1,250,142.00**	**1,248,980.00**	**-1,162.00**	**-0.09%**

Budget Comparison Report

Account Number		2021-2022 Total Activity	2022-2023 Total Budget	2022-2023 YTD Activity Through Feb	Parent Budget 2022-2023 FY2023 Amend	Comparison 1 Budget 2023-2024 FY2024 Dept Request	Comparison 1 to Parent Budget Increase / (Decrease)	%
Expense								
184.5030.5010.010	REGULAR-NON UNION	106,666.70	100,354.00	81,787.30	119,889.00	134,678.00	14,789.00	12.34%
184.5030.5061.010	RHSA PAYOUTS-NON UNION	0.00	0.00	1,946.07	0.00	16,000.00	16,000.00	0.00%
184.5030.5101.010	SOCIAL SECURITY-NON UNION	6,429.12	6,222.00	4,919.54	7,433.00	8,350.00	917.00	12.34%
184.5030.5102.010	MEDICARE-NON UNION	1,503.36	1,455.00	1,150.72	1,738.00	1,953.00	215.00	12.37%
184.5030.5111.010	IPERS-NON UNION	10,069.45	9,473.00	7,663.11	11,317.00	12,714.00	1,397.00	12.34%
184.5030.5121.010	GRP INSUR-NON UNION	12,628.91	13,740.00	10,721.25	17,315.00	20,972.00	3,657.00	21.12%
184.5030.5123.010	WORKCOMP-NON UNION	247.20	164.00	458.60	196.00	702.00	506.00	258.16%
184.5030.5210.000	ADVERTISING & LEGAL PUB	20.93	200.00	0.00	200.00	50.00	-150.00	-75.00%
184.5030.5231.000	ACCOUNTING FEES	10,032.00	12,171.00	8,114.00	12,171.00	12,734.00	563.00	4.63%
184.5030.5232.000	AUDITING FEES	4,700.00	2,610.00	1,305.00	2,615.00	2,658.00	43.00	1.64%
184.5030.5238.000	PROJECT ADMIN-PHA	427.68	1,000.00	172.72	1,000.00	500.00	-500.00	-50.00%
184.5030.5242.000	SEC 8 PYMTS-OCCUPIED	1,046,365.00	1,035,000.00	699,224.00	1,035,000.00	1,035,000.00	0.00	0.00%
184.5030.5246.000	SEC 8-TENANT UTILITY REIMB	4,652.00	8,000.00	2,497.00	4,000.00	4,000.00	0.00	0.00%
184.5030.5251.000	LICENSE & PERMITS	0.00	120.00	0.00	120.00	120.00	0.00	0.00%
184.5030.5280.000	DUES, MEMBER, SUBSCRIPTN	1,474.44	1,500.00	1,483.72	1,500.00	1,500.00	0.00	0.00%
184.5030.5300.000	INSURANCE - TORT LIAB	774.24	997.00	0.00	789.00	947.00	158.00	20.03%
184.5030.5342.000	CONTRACT-OUTSIDE HELP	511.89	1,000.00	1,110.01	1,800.00	2,000.00	200.00	11.11%
184.5030.5344.000	CONTRACT-MAINTENANCE	3,193.60	4,000.00	2,530.90	4,000.00	4,000.00	0.00	0.00%
184.5030.5347.000	CONTRACT-SOFTWARE MAINT	14,708.73	15,000.00	525.00	15,000.00	15,000.00	0.00	0.00%
184.5030.5360.000	POSTAGE & SHIPPING	3,600.53	4,000.00	2,551.15	4,000.00	4,000.00	0.00	0.00%
184.5030.5430.000	INTERPRETING	0.00	250.00	0.00	250.00	250.00	0.00	0.00%
184.5030.5450.000	TELEPHONE/OTHR COMMNCT	1,596.52	1,600.00	1,066.32	1,600.00	1,600.00	0.00	0.00%
184.5030.5460.000	CONFERENCE EXPENSE	734.75	700.00	1,075.00	1,500.00	700.00	-800.00	-53.33%
184.5030.5472.000	MILEAGE REIMBURSE	0.00	400.00	0.00	400.00	400.00	0.00	0.00%
184.5030.5600.000	OPERATING SUPPLIES	-1,581.21	100.00	-831.83	100.00	100.00	0.00	0.00%
184.5030.5605.000	OFFICE SUPPLIES	754.26	1,000.00	250.55	1,000.00	1,000.00	0.00	0.00%
184.5030.5612.000	COMPUTER COMPONENTS	0.00	200.00	0.00	200.00	200.00	0.00	0.00%
184.5030.5702.000	MINOR OFFICE FURN/EQUIP	0.00	0.00	376.65	400.00	0.00	-400.00	-100.00%
184.5030.5703.000	MINOR COMPUTER	0.00	1,000.00	0.00	1,000.00	1,000.00	0.00	0.00%
184.5030.5704.000	MINOR SOFTWARE <$5,000	0.00	500.00	0.00	500.00	500.00	0.00	0.00%
184.5030.5718.000	MINOR EQUIP, UNCLASSFIED	0.00	500.00	0.00	500.00	500.00	0.00	0.00%
184.5030.5750.000	OTHER CAP EQUIP > $5,000	0.00	0.00	1,685.00	0.00	0.00	0.00	0.00%
184.5030.5980.000	REFUNDS/REIMB	14.00	0.00	0.00	0.00	0.00	0.00	0.00%
	Total Expense:	**1,229,524.10**	**1,223,256.00**	**831,781.78**	**1,247,533.00**	**1,284,128.00**	**36,595.00**	**2.93%**
	Total Function: 5030 - Housing & Urban Renewal:	**46,361.02**	**22,374.00**	**58,420.64**	**2,609.00**	**-35,148.00**	**-37,757.00**	**-1,447.18%**
	Total Fund: 184 - VOUCHERS - 002, 003:	**46,361.02**	**22,374.00**	**58,420.64**	**2,609.00**	**-35,148.00**	**-37,757.00**	**-1,447.18%**

Budget Comparison Report

Account Number		2021-2022 Total Activity	2022-2023 Total Budget	2022-2023 YTD Activity Through Feb	Parent Budget 2022-2023 FY2023 Amend	Comparison 1 Budget 2023-2024 FY2024 Dept Request	Comparison 1 to Parent Budget Increase / (Decrease)	%
Fund: 189 - #6 HUD LEAD GRANT								
Function: 3040 - Health Regulation & Inspections								
Revenue								
189.3040.4310.000	COMM HLTH FED OPER GRNT	536,880.08	1,605,541.99	371,862.34	1,605,542.00	1,582,850.00	-22,692.00	-1.41%
189.3040.4500.000	FINES-COMMUNITY HEALTH	1,700.00	0.00	1,800.00	1,800.00	0.00	-1,800.00	-100.00%
189.3040.4820.000	CONTRIBS FOR COMM HEALTH	0.00	0.00	39,714.00	40,000.00	0.00	-40,000.00	-100.00%
189.3040.4875.000	RFNDS/REIMB	2,000.21	0.00	1,319.53	0.00	0.00	0.00	0.00%
	Total Revenue:	**540,580.29**	**1,605,541.99**	**414,695.87**	**1,647,342.00**	**1,582,850.00**	**-64,492.00**	**-3.91%**
Expense								
189.3040.5010.010	REGULAR-NON UNION	137,100.03	157,177.00	82,450.61	124,053.00	125,393.00	1,340.00	1.08%
189.3040.5101.010	SOCIAL SECURITY-NON UNION	8,171.49	9,745.00	4,800.76	7,691.00	7,774.00	83.00	1.08%
189.3040.5102.010	MEDICARE-NON UNION	1,910.98	2,279.00	1,122.70	1,799.00	1,818.00	19.00	1.06%
189.3040.5111.010	IPERS-NON UNION	12,942.54	14,837.00	7,783.25	11,711.00	11,837.00	126.00	1.08%
189.3040.5121.010	GRP INSUR-NON UNION	16,813.81	18,913.00	17,729.22	11,156.00	27,438.00	16,282.00	145.95%
189.3040.5123.010	WORKCOMP-NON UNION	291.18	257.00	134.70	203.00	205.00	2.00	0.99%
189.3040.5231.000	ACCOUNTING FEES	15,600.00	15,600.00	10,400.00	15,600.00	15,600.00	0.00	0.00%
189.3040.5232.000	AUDITING FEES	1,177.50	1,310.00	1,305.00	1,305.00	1,358.00	53.00	4.06%
189.3040.5250.000	COURT, RECORD & FILING FEE	211.00	1,000.00	58.00	500.00	1,000.00	500.00	100.00%
189.3040.5251.000	LICENSE & PERMITS	1,270.00	700.00	0.00	700.00	700.00	0.00	0.00%
189.3040.5290.000	INSURANCE - GENERAL	3,131.00	5,600.00	3,105.75	3,106.00	3,727.00	621.00	19.99%
189.3040.5300.000	INSURANCE - TORT LIAB	1,888.74	1,306.00	0.00	2,606.00	3,127.00	521.00	19.99%
189.3040.5342.000	CONTRACT-OUTSIDE HELP	49,700.00	150,000.00	87,320.00	150,000.00	150,000.00	0.00	0.00%
189.3040.5347.000	CONTRACT-SOFTWARE MAINT	2,390.03	3,000.00	0.00	3,000.00	3,000.00	0.00	0.00%
189.3040.5360.000	POSTAGE & SHIPPING	110.00	1,500.00	300.00	1,500.00	1,500.00	0.00	0.00%
189.3040.5410.000	REPAIRS & MAINTENANCE	288,400.00	1,000,000.00	323,580.00	1,139,446.00	1,000,000.00	-139,446.00	-12.24%
189.3040.5415.000	HEALTH HOME REPAIRS	56,714.00	150,000.00	35,975.00	150,000.00	200,000.00	50,000.00	33.33%
189.3040.5430.000	SUSTENANCE/CARE PERSONS	0.00	10,000.00	0.00	10,000.00	10,000.00	0.00	0.00%
189.3040.5433.000	RELOCATION EXPENSES	8,300.00	50,000.00	6,342.00	25,000.00	10,685.00	-14,315.00	-57.26%
189.3040.5450.000	TELEPHONE/OTHR COMMNCT	383.86	1,000.00	257.12	500.00	400.00	-100.00	-20.00%
189.3040.5460.000	CONFERENCE EXPENSE	2,886.00	3,000.00	1,690.00	1,000.00	1,000.00	0.00	0.00%
189.3040.5461.000	TRAVEL-AIRFARE	0.00	1,000.00	0.00	1,000.00	1,000.00	0.00	0.00%
189.3040.5464.000	TRAVEL-PER DIEM	0.00	600.00	19.00	600.00	600.00	0.00	0.00%
189.3040.5465.000	TRAVEL - HOTEL/MOTEL	0.00	1,200.00	375.76	1,200.00	1,200.00	0.00	0.00%
189.3040.5472.000	MILEAGE REIMBURSE	0.00	200.00	0.00	200.00	200.00	0.00	0.00%
189.3040.5600.000	OPERATING SUPPLIES	626.08	1,200.00	602.27	5,000.00	1,200.00	-3,800.00	-76.00%
189.3040.5601.000	PROMOTION/PROGRAM SPPL	995.95	1,000.00	20.00	400.00	1,000.00	600.00	150.00%
189.3040.5604.000	DUST WIPE/CLRNC SMPLNG	0.00	200.00	0.00	200.00	200.00	0.00	0.00%
189.3040.5605.000	OFFICE SUPPLIES	557.81	2,000.00	34.98	1,000.00	500.00	-500.00	-50.00%
189.3040.5606.000	SOIL SAMPLING	0.00	200.00	0.00	200.00	200.00	0.00	0.00%

Account Number		2021-2022 Total Activity	2022-2023 Total Budget	2022-2023 YTD Activity Through Feb	Parent Budget 2022-2023 FY2023 Amend	Comparison 1 Budget 2023-2024 FY2024 Dept Request	Comparison 1 to Parent Budget Increase / (Decrease)	%
189.3040.5702.000	MINOR OFFICE FURN/EQUIP	0.00	0.00	176.88	180.00	0.00	-180.00	-100.00%
189.3040.5703.000	MINOR COMPUTER	0.00	500.00	0.00	500.00	500.00	0.00	0.00%
	Total Expense:	**611,572.00**	**1,605,324.00**	**585,583.00**	**1,671,356.00**	**1,583,162.00**	**-88,194.00**	**-5.28%**
	Total Function: 3040 - Health Regulation & Inspections:	**-70,991.71**	**217.99**	**-170,887.13**	**-24,014.00**	**-312.00**	**23,702.00**	**-98.70%**
Function: 6021 - Finance								
Revenue								
189.6021.4610.000	INTEREST REV.	21.43	0.00	220.73	400.00	0.00	-400.00	-100.00%
	Total Revenue:	**21.43**	**0.00**	**220.73**	**400.00**	**0.00**	**-400.00**	**-100.00%**
	Total Function: 6021 - Finance:	**21.43**	**0.00**	**220.73**	**400.00**	**0.00**	**-400.00**	**-100.00%**
Function: 9000 - 9000								
Revenue								
189.9000.6500.179	TRANSFER IN - COMM & ECON	79,839.36	0.00	0.00	0.00	0.00	0.00	0.00%
189.9000.6500.180	TRANSFER IN - HOUSING GRAN	28,073.24	0.00	0.00	0.00	0.00	0.00	0.00%
	Total Revenue:	**107,912.60**	**0.00**	**0.00**	**0.00**	**0.00**	**0.00**	**0.00%**
	Total Function: 9000 - 9000:	**107,912.60**	**0.00**	**0.00**	**0.00**	**0.00**	**0.00**	**0.00%**
	Total Fund: 189 - #6 HUD LEAD GRANT:	**36,942.32**	**217.99**	**-170,666.40**	**-23,614.00**	**-312.00**	**23,302.00**	**-98.68%**
Fund: 200 - GO BONDS DEBT FUND								
Function: 6021 - Finance								
Revenue								
200.6021.4010.000	PROPERTY TAXES-CURRENT	815,065.35	718,605.00	384,966.67	718,605.00	2,080,282.00	1,361,677.00	189.49%
200.6021.4011.000	DELIQUENT PROPERTY TAXES	3,171.75	0.00	600.05	0.00	0.00	0.00	0.00%
200.6021.4110.000	UTILITY EXCISE TAX	95,861.43	68,334.00	36,825.95	68,334.00	245,692.00	177,358.00	259.55%
200.6021.4150.000	CURRENT MOBILE HOME TAXE	800.73	700.00	446.94	700.00	700.00	0.00	0.00%
200.6021.4151.000	DELIQ MOBILE HOME TAXES	48.72	0.00	53.30	0.00	0.00	0.00	0.00%
200.6021.4332.000	AGED INCOME CREDIT	925.33	0.00	814.04	0.00	0.00	0.00	0.00%
200.6021.4333.000	DISABLED HOMESTEAD CREDI	2,749.52	0.00	1,035.15	0.00	0.00	0.00	0.00%
200.6021.4335.000	HOMESTEAD CREDIT	29,131.88	0.00	11,421.41	0.00	0.00	0.00	0.00%
200.6021.4336.000	MILITARY CREDIT	327.33	0.00	245.18	0.00	0.00	0.00	0.00%
200.6021.4337.000	MOBILE HOME CREDIT	0.00	0.00	1.48	0.00	0.00	0.00	0.00%
200.6021.4338.000	BUSINESS PROP TAX CREDIT	29,269.94	0.00	11,631.36	0.00	50,355.00	50,355.00	0.00%
200.6021.4339.000	SF295 BACKFILL	28,149.26	18,551.00	9,264.34	18,551.00	36,629.00	18,078.00	97.45%
200.6021.4610.000	INTEREST ON INVESTMENTS	13,558.30	5,500.00	11,488.37	16,000.00	5,500.00	-10,500.00	-65.63%
	Total Revenue:	**1,019,059.54**	**811,690.00**	**468,794.24**	**822,190.00**	**2,419,158.00**	**1,596,968.00**	**194.23%**
	Total Function: 6021 - Finance:	**1,019,059.54**	**811,690.00**	**468,794.24**	**822,190.00**	**2,419,158.00**	**1,596,968.00**	**194.23%**

Budget Comparison Report

Account Number		2021-2022 Total Activity	2022-2023 Total Budget	2022-2023 YTD Activity Through Feb	Parent Budget 2022-2023 FY2023 Amend	Comparison 1 Budget 2023-2024 FY2024 Dept Request	Comparison 1 to Parent Budget Increase / (Decrease)	%
Function: 7010 - Debt Service								
Expense								
200.7010.5810.000	PRINCIPAL REDEMPTION	4,384,243.00	4,755,000.00	0.00	4,755,000.00	5,510,000.00	755,000.00	15.88%
200.7010.5820.000	INTEREST PAYMENTS	897,400.00	1,085,502.00	585,103.62	1,085,502.00	1,514,713.00	429,211.00	39.54%
200.7010.5830.000	OTHER DEBT SERV EXP	5,900.00	6,000.00	4,200.00	6,000.00	6,700.00	700.00	11.67%
	Total Expense:	**5,287,543.00**	**5,846,502.00**	**589,303.62**	**5,846,502.00**	**7,031,413.00**	**1,184,911.00**	**20.27%**
	Total Function: 7010 - Debt Service:	**5,287,543.00**	**5,846,502.00**	**589,303.62**	**5,846,502.00**	**7,031,413.00**	**1,184,911.00**	**20.27%**
Function: 9000 - 9000								
Revenue								
200.9000.6500.121	TRANSFER IN - LOST - PROP TA	2,879,760.00	3,641,775.00	1,494,226.76	3,641,775.00	3,333,609.00	-308,166.00	-8.46%
200.9000.6500.125	TR FRM TIF SPEC REV	394,090.85	386,365.00	0.00	386,365.00	325,806.00	-60,559.00	-15.67%
200.9000.6500.610	TRANSFER IN - WPCP	492,718.00	503,818.00	0.00	503,818.00	504,518.00	700.00	0.14%
200.9000.6500.740	TRANSFER IN - STORM SEWER	549,056.00	527,606.00	0.00	527,606.00	541,506.00	13,900.00	2.63%
200.9000.6500.741	Transfer In - Storm/sewer	0.00	0.00	0.00	0.00	0.00	0.00	0.00%
	Total Revenue:	**4,315,624.85**	**5,059,564.00**	**1,494,226.76**	**5,059,564.00**	**4,705,439.00**	**-354,125.00**	**-7.00%**
	Total Function: 9000 - 9000:	**4,315,624.85**	**5,059,564.00**	**1,494,226.76**	**5,059,564.00**	**4,705,439.00**	**-354,125.00**	**-7.00%**
	Total Fund: 200 - GO BONDS DEBT FUND:	**47,141.39**	**24,752.00**	**1,373,717.38**	**35,252.00**	**93,184.00**	**57,932.00**	**164.34%**
Fund: 300 - CIP COLLECTION FUND								
Function: 6021 - Finance								
Revenue								
300.6021.4011.000	DELIQUENT PROPERTY TAXES	1,917.07	0.00	366.74	0.00	0.00	0.00	0.00%
300.6021.4085.000	PROP TAX CAPITAL IMPROVMI	508,972.23	569,994.00	303,762.29	569,994.00	558,845.00	-11,149.00	-1.96%
300.6021.4110.000	UTILITY EXCISE TAX	61,652.81	55,042.00	29,661.14	55,042.00	68,398.00	13,356.00	24.27%
300.6021.4150.000	CURRENT MOBILE HOME TAXE	514.13	0.00	367.42	0.00	0.00	0.00	0.00%
300.6021.4151.000	DELIQ MOBILE HOME TAXES	31.88	0.00	28.38	0.00	0.00	0.00	0.00%
300.6021.4332.000	AGED INCOME CREDIT	572.25	0.00	507.26	0.00	0.00	0.00	0.00%
300.6021.4333.000	DISABLED HOMESTEAD CREDI	1,764.30	0.00	831.24	0.00	0.00	0.00	0.00%
300.6021.4335.000	HOMESTEAD CREDIT	18,559.90	0.00	9,157.07	0.00	0.00	0.00	0.00%
300.6021.4336.000	MILITARY CREDIT	210.53	0.00	197.47	0.00	0.00	0.00	0.00%
300.6021.4337.000	MOBILE HOME CREDIT	0.00	0.00	1.19	0.00	0.00	0.00	0.00%
300.6021.4338.000	BUSINESS PROP TAX CREDIT	17,452.80	0.00	9,075.75	0.00	17,712.00	17,712.00	0.00%
300.6021.4339.000	SF295 BACKFILL	16,698.84	14,734.00	7,358.32	14,734.00	12,481.00	-2,253.00	-15.29%
300.6021.4610.000	INTEREST ON INVESTMENTS	4,868.94	1,000.00	6,187.22	10,000.00	6,000.00	-4,000.00	-40.00%
	Total Revenue:	**633,215.68**	**640,770.00**	**367,501.49**	**649,770.00**	**663,436.00**	**13,666.00**	**2.10%**
	Total Function: 6021 - Finance:	**633,215.68**	**640,770.00**	**367,501.49**	**649,770.00**	**663,436.00**	**13,666.00**	**2.10%**

Budget Comparison Report

Account Number		2021-2022 Total Activity	2022-2023 Total Budget	2022-2023 YTD Activity Through Feb	Parent Budget 2022-2023 FY2023 Amend	Comparison 1 Budget 2023-2024 FY2024 Dept Request	Comparison 1 to Parent Budget Increase / (Decrease)	%
Function: 9000 - 9000								
Revenue								
300.9000.6500.157	TRANSFER IN - FUND 157	4,500.00	0.00	0.00	0.00	0.00	0.00	0.00%
	Total Revenue:	**4,500.00**	**0.00**	**0.00**	**0.00**	**0.00**	**0.00**	**0.00%**
Expense								
300.9000.7500.030	TR TO CAP IMPR RESRV	437,598.68	796,599.00	319,252.34	890,689.00	696,423.00	-194,266.00	-21.81%
300.9000.7500.032	TR TO CIP LARGE EQUIP	40,485.52	0.00	0.00	93,755.00	94,086.00	331.00	0.35%
300.9000.7500.132	TRANSFER OUT - FUND 132	69,853.97	0.00	0.00	0.00	0.00	0.00	0.00%
	Total Expense:	**547,938.17**	**796,599.00**	**319,252.34**	**984,444.00**	**790,509.00**	**-193,935.00**	**-19.70%**
	Total Function: 9000 - 9000:	**-543,438.17**	**-796,599.00**	**-319,252.34**	**-984,444.00**	**-790,509.00**	**193,935.00**	**-19.70%**
	Total Fund: 300 - CIP COLLECTION FUND:	**89,777.51**	**-155,829.00**	**48,249.15**	**-334,674.00**	**-127,073.00**	**207,601.00**	**-62.03%**
Fund: 310 - FEDERAL STREET GRANTS								
Function: 2012 - Street Construction								
Expense								
310.2012.5233.000	ENGINEERING FEES	40,062.00	0.00	0.00	0.00	0.00	0.00	0.00%
	Total Expense:	**40,062.00**	**0.00**	**0.00**	**0.00**	**0.00**	**0.00**	**0.00%**
	Total Function: 2012 - Street Construction:	**40,062.00**	**0.00**	**0.00**	**0.00**	**0.00**	**0.00**	**0.00%**
Function: 6021 - Finance								
Revenue								
310.6021.4610.000	INTEREST ON INVESTMENTS	-30.42	0.00	0.00	0.00	0.00	0.00	0.00%
	Total Revenue:	**-30.42**	**0.00**	**0.00**	**0.00**	**0.00**	**0.00**	**0.00%**
	Total Function: 6021 - Finance:	**-30.42**	**0.00**	**0.00**	**0.00**	**0.00**	**0.00**	**0.00%**
	Total Fund: 310 - FEDERAL STREET GRANTS:	**-40,092.42**	**0.00**	**0.00**	**0.00**	**0.00**	**0.00**	**0.00%**
Fund: 311 - RISE STREET GRANTS								
Function: 2012 - Street Construction								
Revenue								
311.2012.4315.000	FED CAP GRANT	0.00	956,849.00	0.00	2,956,849.00	0.00	-2,956,849.00	-100.00%
311.2012.4330.000	STATE OPER GRANT	0.00	1,640,342.00	0.00	1,640,342.00	0.00	-1,640,342.00	-100.00%
311.2012.4875.000	RFNDS/REIMB	0.00	277,150.00	8,580.41	128,580.00	0.00	-128,580.00	-100.00%
	Total Revenue:	**0.00**	**2,874,341.00**	**8,580.41**	**4,725,771.00**	**0.00**	**-4,725,771.00**	**-100.00%**
Expense								
311.2012.5230.000	CONSULTING & PROF FEES	9,518.48	10,000.00	3,731.00	20,000.00	0.00	-20,000.00	-100.00%
311.2012.5233.000	ENGINEERING FEES	80,382.11	0.00	116,196.74	404,890.00	25,000.00	-379,890.00	-93.83%
311.2012.5342.000	CONTRACT-OUTSIDE HELP	11,517.00	4,401,311.00	3,903,030.51	6,050,000.00	0.00	-6,050,000.00	-100.00%
311.2012.5348.000	CONTRACT-OTHER	24,000.00	0.00	0.00	0.00	0.00	0.00	0.00%

Budget Comparison Report

Account Number		2021-2022 Total Activity	2022-2023 Total Budget	2022-2023 YTD Activity Through Feb	Parent Budget 2022-2023 FY2023 Amend	Comparison 1 Budget 2023-2024 FY2024 Dept Request	Comparison 1 to Parent Budget Increase / (Decrease)	%
311.2012.5782.000	R.O.W.-LAND-PERMANENT	123,419.16	0.00	0.00	0.00	0.00	0.00	0.00%
	Total Expense:	**248,836.75**	**4,411,311.00**	**4,022,958.25**	**6,474,890.00**	**25,000.00**	**-6,449,890.00**	**-99.61%**
	Total Function: 2012 - Street Construction:	**-248,836.75**	**-1,536,970.00**	**-4,014,377.84**	**-1,749,119.00**	**-25,000.00**	**1,724,119.00**	**-98.57%**
Function: 9000 - 9000								
Revenue								
311.9000.6500.110	TRANSFER IN - FUND 110 RUT	0.00	0.00	0.00	104,620.00	0.00	-104,620.00	-100.00%
311.9000.6500.121	TRANSFER IN - LOST	248,836.75	689,030.00	0.00	1,053,079.00	25,000.00	-1,028,079.00	-97.63%
311.9000.6500.389	TRANSFER IN - FUND 389	0.00	850,000.00	0.00	600,000.00	0.00	-600,000.00	-100.00%
	Total Revenue:	**248,836.75**	**1,539,030.00**	**0.00**	**1,757,699.00**	**25,000.00**	**-1,732,699.00**	**-98.58%**
	Total Function: 9000 - 9000:	**248,836.75**	**1,539,030.00**	**0.00**	**1,757,699.00**	**25,000.00**	**-1,732,699.00**	**-98.58%**
	Total Fund: 311 - RISE STREET GRANTS:	**0.00**	**2,060.00**	**-4,014,377.84**	**8,580.00**	**0.00**	**-8,580.00**	**-100.00%**
Fund: 312 - AIRPORT PROJECT FUND								
Function: 2080 - Airport								
Revenue								
312.2080.4315.000	AIRPORT-FED CAP GRANT	549,258.00	166,666.00	211,670.00	211,670.00	150,000.00	-61,670.00	-29.13%
312.2080.4330.000	STATE OPER GRANT	140,807.00	0.00	253,548.00	395,865.00	0.00	-395,865.00	-100.00%
312.2080.4879.000	REBATES	0.00	0.00	4,369.80	4,370.00	0.00	-4,370.00	-100.00%
	Total Revenue:	**690,065.00**	**166,666.00**	**469,587.80**	**611,905.00**	**150,000.00**	**-461,905.00**	**-75.49%**
Expense								
312.2080.5233.000	ENGINEERING FEES	118,825.95	0.00	34,134.34	38,053.00	50,000.00	11,947.00	31.40%
312.2080.5234.000	LEGAL EXPENSES	0.00	0.00	396.00	3,000.00	0.00	-3,000.00	-100.00%
312.2080.5342.000	CONTRACT-OUTSIDE HELP	19,729.21	0.00	12,181.57	23,886.00	91,500.00	67,614.00	283.07%
312.2080.5348.000	CONTRACT-OTHER	2,310,403.90	0.00	308,791.10	480,024.00	0.00	-480,024.00	-100.00%
312.2080.5776.000	BUILDINGS & IMPROVEMENTS	1,122.81	0.00	2,667.87	50,000.00	0.00	-50,000.00	-100.00%
	Total Expense:	**2,450,081.87**	**0.00**	**358,170.88**	**594,963.00**	**141,500.00**	**-453,463.00**	**-76.22%**
	Total Function: 2080 - Airport:	**-1,760,016.87**	**166,666.00**	**111,416.92**	**16,942.00**	**8,500.00**	**-8,442.00**	**-49.83%**
Function: 6021 - Finance								
Revenue								
312.6021.4610.000	INTEREST ON INVESTMENTS	5,375.27	0.00	1,441.66	1,500.00	0.00	-1,500.00	-100.00%
	Total Revenue:	**5,375.27**	**0.00**	**1,441.66**	**1,500.00**	**0.00**	**-1,500.00**	**-100.00%**
	Total Function: 6021 - Finance:	**5,375.27**	**0.00**	**1,441.66**	**1,500.00**	**0.00**	**-1,500.00**	**-100.00%**
Function: 9000 - 9000								
Revenue								
312.9000.6500.030	TRANSFER IN - CAPITAL RESER	0.00	0.00	0.00	0.00	50,000.00	50,000.00	0.00%
312.9000.6500.031	TRANSFER IN - FUND 031	0.00	0.00	0.00	0.00	11,500.00	11,500.00	0.00%

Account Number		2021-2022 Total Activity	2022-2023 Total Budget	2022-2023 YTD Activity Through Feb	Parent Budget 2022-2023 FY2023 Amend	Comparison 1 Budget 2023-2024 FY2024 Dept Request	Comparison 1 to Parent Budget Increase / (Decrease)	%
312.9000.6500.130	TRANSFER IN - FUND 130	0.00	0.00	8,380.38	8,381.00	0.00	-8,381.00	-100.00%
	Total Revenue:	**0.00**	**0.00**	**8,380.38**	**8,381.00**	**61,500.00**	**53,119.00**	**633.80%**
	Total Function: 9000 - 9000:	**0.00**	**0.00**	**8,380.38**	**8,381.00**	**61,500.00**	**53,119.00**	**633.80%**
	Total Fund: 312 - AIRPORT PROJECT FUND:	**-1,754,641.60**	**166,666.00**	**121,238.96**	**26,823.00**	**70,000.00**	**43,177.00**	**160.97%**
Fund: 320 - SPECIAL ASSESSMENT PROJECTS								
Function: 6020 - Clerk								
Revenue								
320.6020.4761.000	SPEC ASSESMNTS-SIDEWALK	537.00	5,000.00	0.00	500.00	500.00	0.00	0.00%
	Total Revenue:	**537.00**	**5,000.00**	**0.00**	**500.00**	**500.00**	**0.00**	**0.00%**
	Total Function: 6020 - Clerk:	**537.00**	**5,000.00**	**0.00**	**500.00**	**500.00**	**0.00**	**0.00%**
	Total Fund: 320 - SPECIAL ASSESSMENT PROJECTS:	**537.00**	**5,000.00**	**0.00**	**500.00**	**500.00**	**0.00**	**0.00%**
Fund: 340 - BIKE PATH PROJECT FUND								
Function: 4030 - Parks								
Revenue								
340.4030.4315.000	P/R-FED CAP GRT	0.00	240,000.00	0.00	0.00	797,000.00	797,000.00	0.00%
340.4030.4330.000	STATE OPER GRANT	141,992.84	60,000.00	0.00	90,544.00	193,424.00	102,880.00	113.62%
340.4030.4350.000	LOCAL/COUNTY GRANTS	6,166.69	60,254.00	0.00	30,181.00	594,391.00	564,210.00	1,869.42%
	Total Revenue:	**148,159.53**	**360,254.00**	**0.00**	**120,725.00**	**1,584,815.00**	**1,464,090.00**	**1,212.75%**
Expense								
340.4030.5233.000	ENGINEERING FEES	74,626.08	100,000.00	53,622.20	60,862.00	95,000.00	34,138.00	56.09%
340.4030.5342.000	CONTRACT-OUTSIDE HELP	0.00	500,000.00	0.00	0.00	1,540,000.00	1,540,000.00	0.00%
340.4030.5485.000	STORM WATER FEES	2,540.08	2,540.00	2,540.08	2,540.00	2,540.00	0.00	0.00%
	Total Expense:	**77,166.16**	**602,540.00**	**56,162.28**	**63,402.00**	**1,637,540.00**	**1,574,138.00**	**2,482.79%**
	Total Function: 4030 - Parks:	**70,993.37**	**-242,286.00**	**-56,162.28**	**57,323.00**	**-52,725.00**	**-110,048.00**	**-191.98%**
Function: 9000 - 9000								
Revenue								
340.9000.6500.121	TR IN - LOST	0.00	0.00	0.00	56,599.00	0.00	-56,599.00	-100.00%
	Total Revenue:	**0.00**	**0.00**	**0.00**	**56,599.00**	**0.00**	**-56,599.00**	**-100.00%**
	Total Function: 9000 - 9000:	**0.00**	**0.00**	**0.00**	**56,599.00**	**0.00**	**-56,599.00**	**-100.00%**
	Total Fund: 340 - BIKE PATH PROJECT FUND:	**70,993.37**	**-242,286.00**	**-56,162.28**	**113,922.00**	**-52,725.00**	**-166,647.00**	**-146.28%**
Fund: 341 - TREES FOREVER PROJECT								
Function: 5010 - Community Beautification								
Revenue								
341.5010.4820.000	PARK & REC CONTRIBS	32,324.00	10,000.00	33,965.00	35,000.00	35,000.00	0.00	0.00%

Account Number		2021-2022 Total Activity	2022-2023 Total Budget	2022-2023 YTD Activity Through Feb	Parent Budget 2022-2023 FY2023 Amend	Comparison 1 Budget 2023-2024 FY2024 Dept Request	Comparison 1 to Parent Budget Increase / (Decrease)	%
341.5010.4875.000	REFUNDS/REIMB	5.30	0.00	0.00	0.00	0.00	0.00	0.00%
	Total Revenue:	**32,329.30**	**10,000.00**	**33,965.00**	**35,000.00**	**35,000.00**	**0.00**	**0.00%**
Expense								
341.5010.5370.000	PRINTING & BINDING	72.00	0.00	0.00	0.00	0.00	0.00	0.00%
341.5010.5609.000	AGRICULTURAL SUPPLIES	19,994.22	20,000.00	34,645.00	40,000.00	40,000.00	0.00	0.00%
341.5010.5611.000	BLDG,GRD OPER/MAINT SPLY	905.17	0.00	0.00	0.00	0.00	0.00	0.00%
	Total Expense:	**20,971.39**	**20,000.00**	**34,645.00**	**40,000.00**	**40,000.00**	**0.00**	**0.00%**
	Total Function: 5010 - Community Beautification:	**11,357.91**	**-10,000.00**	**-680.00**	**-5,000.00**	**-5,000.00**	**0.00**	**0.00%**
Function: 6021 - Finance								
Revenue								
341.6021.4610.000	INTEREST ON INVESTMENTS	238.46	0.00	458.07	800.00	800.00	0.00	0.00%
	Total Revenue:	**238.46**	**0.00**	**458.07**	**800.00**	**800.00**	**0.00**	**0.00%**
	Total Function: 6021 - Finance:	**238.46**	**0.00**	**458.07**	**800.00**	**800.00**	**0.00**	**0.00%**
	Total Fund: 341 - TREES FOREVER PROJECT:	**11,596.37**	**-10,000.00**	**-221.93**	**-4,200.00**	**-4,200.00**	**0.00**	**0.00%**
Fund: 350 - GO BONDS CAPITAL PROJECTS								
Function: 2011 - Sidewalks								
Expense								
350.2011.5342.000	CONTRACT-OUTSIDE HELP	0.00	0.00	0.00	0.00	0.00	0.00	0.00%
	Total Expense:	**0.00**	**0.00**	**0.00**	**0.00**	**0.00**	**0.00**	**0.00%**
	Total Function: 2011 - Sidewalks:	**0.00**	**0.00**	**0.00**	**0.00**	**0.00**	**0.00**	**0.00%**
Function: 6021 - Finance								
Revenue								
350.6021.4610.000	INTEREST ON INVESTMENTS	85.94	0.00	98.59	160.00	200.00	40.00	25.00%
	Total Revenue:	**85.94**	**0.00**	**98.59**	**160.00**	**200.00**	**40.00**	**25.00%**
	Total Function: 6021 - Finance:	**85.94**	**0.00**	**98.59**	**160.00**	**200.00**	**40.00**	**25.00%**
	Total Fund: 350 - GO BONDS CAPITAL PROJECTS:	**85.94**	**0.00**	**98.59**	**160.00**	**200.00**	**40.00**	**25.00%**
Fund: 354 - POLICE & FIRE STATIONS								
Function: 1099 - Police and Fire Building Exps								
Expense								
354.1099.5234.000	LEGAL EXPENSES	22,091.91	0.00	0.00	0.00	0.00	0.00	0.00%
354.1099.5260.000	DAMAGES/TORT LIABILITY CLA	55,000.00	0.00	0.00	0.00	0.00	0.00	0.00%
354.1099.5342.000	CONTRACT-OUTSIDE HELP	5,650.00	0.00	741.00	741.00	0.00	-741.00	-100.00%
354.1099.5342.003	CONTRACT - MASONRY	0.00	0.00	0.00	0.00	0.00	0.00	0.00%

Account Number		2021-2022 Total Activity	2022-2023 Total Budget	2022-2023 YTD Activity Through Feb	Parent Budget 2022-2023 FY2023 Amend	Comparison 1 Budget	Comparison 1 to Parent Budget Increase / (Decrease)	%
354.1099.5410.000	REPAIRS & MAINTENANCE	0.00	0.00	0.00	0.00	0.00	0.00	0.00%
	Total Expense:	**82,741.91**	**0.00**	**741.00**	**741.00**	**0.00**	**-741.00**	**-100.00%**
	Total Function: 1099 - Police and Fire Building Exps:	**82,741.91**	**0.00**	**741.00**	**741.00**	**0.00**	**-741.00**	**-100.00%**
Function: 6021 - Finance								
Revenue								
354.6021.4610.000	INTEREST ON INVESTMENTS	5,083.40	0.00	0.00	0.00	0.00	0.00	0.00%
	Total Revenue:	**5,083.40**	**0.00**	**0.00**	**0.00**	**0.00**	**0.00**	**0.00%**
	Total Function: 6021 - Finance:	**5,083.40**	**0.00**	**0.00**	**0.00**	**0.00**	**0.00**	**0.00%**
Function: 9000 - 9000								
Expense								
354.9000.7500.363	TRANSFER OUT - FUND 354	452,827.50	0.00	0.00	0.00	0.00	0.00	0.00%
354.9000.7500.395	TRANSFER OUT - FUND 395	73,529.90	0.00	0.00	0.00	0.00	0.00	0.00%
	Total Expense:	**526,357.40**	**0.00**	**0.00**	**0.00**	**0.00**	**0.00**	**0.00%**
	Total Function: 9000 - 9000:	**526,357.40**	**0.00**	**0.00**	**0.00**	**0.00**	**0.00**	**0.00%**
	Total Fund: 354 - POLICE & FIRE STATIONS:	**-604,015.91**	**0.00**	**-741.00**	**-741.00**	**0.00**	**741.00**	**-100.00%**
Fund: 355 - 2015 GO BONDS (D&D)								
Function: 1075 - Code Enforcement								
Revenue								
355.1075.4330.000	STATE OPER GRANT	24,999.00	0.00	0.00	0.00	0.00	0.00	0.00%
355.1075.4875.000	RFNDS/REIMB	1,370.34	0.00	10,100.00	10,100.00	0.00	-10,100.00	-100.00%
355.1075.4960.000	SALE OF F.A.-CODE ENFORCEM	23,756.00	0.00	8,260.00	15,000.00	10,000.00	-5,000.00	-33.33%
	Total Revenue:	**50,125.34**	**0.00**	**18,360.00**	**25,100.00**	**10,000.00**	**-15,100.00**	**-60.16%**
Expense								
355.1075.5210.000	ADVERTISING & LEGAL PUB	346.08	500.00	0.00	500.00	500.00	0.00	0.00%
355.1075.5230.000	CONSULTING & PROF FEES	85,133.51	50,000.00	74,820.57	77,629.00	10,000.00	-67,629.00	-87.12%
355.1075.5233.000	ENGINEERING FEES	495.92	0.00	0.00	0.00	0.00	0.00	0.00%
355.1075.5234.000	LEGAL EXPENSES	31,472.61	25,000.00	12,413.71	25,000.00	20,000.00	-5,000.00	-20.00%
355.1075.5250.000	COURT, RECORD & FILING FEE	1,695.00	1,000.00	1,605.00	2,000.00	1,000.00	-1,000.00	-50.00%
355.1075.5264.000	RESIDENTIAL DEMO	573,503.98	625,000.00	404,521.15	620,000.00	200,000.00	-420,000.00	-67.74%
355.1075.5290.000	INSURANCE - GENERAL	1,226.00	0.00	114.00	1,471.00	1,765.00	294.00	19.99%
355.1075.5331.000	PAYMENTS-OTHER ENTITIES	155.00	100.00	1,041.00	100.00	100.00	0.00	0.00%
355.1075.5342.000	CONTRACT-OUTSIDE HELP	81,625.59	15,000.00	61,200.89	90,000.00	50,000.00	-40,000.00	-44.44%
355.1075.5360.000	POSTAGE & SHIPPING	88.62	0.00	0.00	0.00	0.00	0.00	0.00%
355.1075.5370.000	PRINTING & BINDING	138.70	0.00	0.00	0.00	0.00	0.00	0.00%
355.1075.5440.000	TAXES PAID	11,838.00	2,000.00	6,139.00	10,000.00	1,000.00	-9,000.00	-90.00%
355.1075.5485.000	STORM WATER	809.68	0.00	0.00	1,000.00	1,000.00	0.00	0.00%
355.1075.5570.000	VEHICLE GAS	77.59	0.00	0.00	0.00	0.00	0.00	0.00%

Account Number		2021-2022 Total Activity	2022-2023 Total Budget	2022-2023 YTD Activity Through Feb	Parent Budget 2022-2023 FY2023 Amend	Comparison 1 Budget 2023-2024 FY2024 Dept Request	Comparison 1 to Parent Budget Increase / (Decrease)	%
355.1075.5600.000	SUPPLIES	3,455.51	0.00	101.85	150.00	0.00	-150.00	-100.00%
355.1075.5781.000	LAND ACQUISITION	110,503.00	50,000.00	2,000.00	10,000.00	4,000.00	-6,000.00	-60.00%
355.1075.5980.000	REFUNDS/REIMB	4,000.00	0.00	0.00	0.00	0.00	0.00	0.00%
	Total Expense:	**906,564.79**	**768,600.00**	**563,957.17**	**837,850.00**	**289,365.00**	**-548,485.00**	**-65.46%**
	Total Function: 1075 - Code Enforcement:	**-856,439.45**	**-768,600.00**	**-545,597.17**	**-812,750.00**	**-279,365.00**	**533,385.00**	**-65.63%**
Function: 6021 - Finance								
Revenue								
355.6021.4610.000	INTEREST ON INVESTMENTS	1,711.93	500.00	4,259.53	5,000.00	500.00	-4,500.00	-90.00%
355.6021.4990.000	DEBT ISSUANCE	0.00	0.00	610,000.00	610,000.00	0.00	-610,000.00	-100.00%
355.6021.4993.000	BOND PREMIUM	0.00	0.00	-4,867.80	4,867.00	0.00	-4,867.00	-100.00%
	Total Revenue:	**1,711.93**	**500.00**	**609,391.73**	**619,867.00**	**500.00**	**-619,367.00**	**-99.92%**
Expense								
355.6021.5230.000	CONSULTING & PROF FEES	0.00	0.00	2,071.00	2,071.00	0.00	-2,071.00	-100.00%
355.6021.5830.000	OTHER DEBT ISSUANCE EXP	0.00	0.00	300.00	300.00	0.00	-300.00	-100.00%
	Total Expense:	**0.00**	**0.00**	**2,371.00**	**2,371.00**	**0.00**	**-2,371.00**	**-100.00%**
	Total Function: 6021 - Finance:	**1,711.93**	**500.00**	**607,020.73**	**617,496.00**	**500.00**	**-616,996.00**	**-99.92%**
Function: 9000 - 9000								
Revenue								
355.9000.6500.001	TR FROM GENERAL	18,034.62	20,000.00	0.00	20,000.00	20,000.00	0.00	0.00%
355.9000.6500.360	TRANSFER IN - 2019 GO BOND	250,000.00	0.00	0.00	0.00	0.00	0.00	0.00%
355.9000.6500.363	TRANSFER IN - 2021 GO BOND	1,050,000.00	0.00	0.00	0.00	0.00	0.00	0.00%
355.9000.6500.364	TRANSFER IN - 2022 GO BOND	0.00	600,000.00	0.00	0.00	0.00	0.00	0.00%
	Total Revenue:	**1,318,034.62**	**620,000.00**	**0.00**	**20,000.00**	**20,000.00**	**0.00**	**0.00%**
	Total Function: 9000 - 9000:	**1,318,034.62**	**620,000.00**	**0.00**	**20,000.00**	**20,000.00**	**0.00**	**0.00%**
	Total Fund: 355 - 2015 GO BONDS (D&D):	**463,307.10**	**-148,100.00**	**61,423.56**	**-175,254.00**	**-258,865.00**	**-83,611.00**	**47.71%**
Fund: 360 - 2019 GO BONDS & PROJECTS								
Function: 2010 - Roads, Bridges, Sidewalks								
Expense								
360.2010.5342.000	CONTRACT-OUTSIDE HELP	0.00	0.00	1,444.00	1,444.00	0.00	-1,444.00	-100.00%
	Total Expense:	**0.00**	**0.00**	**1,444.00**	**1,444.00**	**0.00**	**-1,444.00**	**-100.00%**
	Total Function: 2010 - Roads, Bridges, Sidewalks:	**0.00**	**0.00**	**1,444.00**	**1,444.00**	**0.00**	**-1,444.00**	**-100.00%**
Function: 2011 - Sidewalks								
Expense								
360.2011.5233.000	ENGINEERING FEES	29,593.00	0.00	0.00	0.00	0.00	0.00	0.00%
360.2011.5342.000	CONTRACT - OUTSIDE HELP	39,449.63	390,000.00	525,205.92	525,206.00	0.00	-525,206.00	-100.00%
360.2011.5351.000	CONTRACT-CONCRETE REPAIR	0.00	0.00	0.00	0.00	0.00	0.00	0.00%

Budget Comparison Report

Account Number		2021-2022 Total Activity	2022-2023 Total Budget	2022-2023 YTD Activity Through Feb	Parent Budget 2022-2023 FY2023 Amend	Comparison 1 Budget 2023-2024 FY2024 Dept Request	Comparison 1 to Parent Budget Increase / (Decrease)	%
360.2011.5783.000	R.O.W. - LAND TEMPORARY	1,260.00	0.00	0.00	0.00	0.00	0.00	0.00%
	Total Expense:	**70,302.63**	**390,000.00**	**525,205.92**	**525,206.00**	**0.00**	**-525,206.00**	**-100.00%**
	Total Function: 2011 - Sidewalks:	**70,302.63**	**390,000.00**	**525,205.92**	**525,206.00**	**0.00**	**-525,206.00**	**-100.00%**
Function: 2012 - Street Construction								
Expense								
360.2012.5351.000	CONTRACT-CONCRETE REPAIR	0.00	0.00	0.00	0.00	0.00	0.00	0.00%
	Total Expense:	**0.00**	**0.00**	**0.00**	**0.00**	**0.00**	**0.00**	**0.00%**
	Total Function: 2012 - Street Construction:	**0.00**	**0.00**	**0.00**	**0.00**	**0.00**	**0.00**	**0.00%**
Function: 4030 - Parks								
Expense								
360.4030.5342.000	CONTRACT-OUTSIDE HELP	17,884.65	400,000.00	0.00	0.00	0.00	0.00	0.00%
360.4030.5785.000	LAND IMPROVEMENTS	34,723.06	0.00	0.00	0.00	0.00	0.00	0.00%
	Total Expense:	**52,607.71**	**400,000.00**	**0.00**	**0.00**	**0.00**	**0.00**	**0.00%**
	Total Function: 4030 - Parks:	**52,607.71**	**400,000.00**	**0.00**	**0.00**	**0.00**	**0.00**	**0.00%**
Function: 6021 - Finance								
Revenue								
360.6021.4610.000	INTEREST REV	16,995.87	10,000.00	3,153.11	4,318.00	0.00	-4,318.00	-100.00%
	Total Revenue:	**16,995.87**	**10,000.00**	**3,153.11**	**4,318.00**	**0.00**	**-4,318.00**	**-100.00%**
	Total Function: 6021 - Finance:	**16,995.87**	**10,000.00**	**3,153.11**	**4,318.00**	**0.00**	**-4,318.00**	**-100.00%**
Function: 9000 - 9000								
Revenue								
360.9000.6500.363	TRANSFER IN - 2021 GO Bonds	0.00	0.00	0.00	25,065.00	0.00	-25,065.00	-100.00%
	Total Revenue:	**0.00**	**0.00**	**0.00**	**25,065.00**	**0.00**	**-25,065.00**	**-100.00%**
Expense								
360.9000.7500.110	TRANSFER OUT - FUND 110	0.00	0.00	244,285.24	245,729.00	0.00	-245,729.00	-100.00%
360.9000.7500.355	TRANSFER OUT - D&D Fund	250,000.00	0.00	0.00	0.00	0.00	0.00	0.00%
360.9000.7500.362	TRANSFER OUT - FUND 362	250,000.00	0.00	0.00	0.00	0.00	0.00	0.00%
360.9000.7500.363	TRANSFER OUT - FUND 363	0.00	0.00	246,368.90	246,090.00	0.00	-246,090.00	-100.00%
360.9000.7500.383	TRANSFER OUT - COLISEUM FU	32,102.09	0.00	0.00	0.00	0.00	0.00	0.00%
360.9000.7500.395	TRANSFER OUT - FUN 395	1,218,371.91	104,300.00	344,190.08	344,190.00	0.00	-344,190.00	-100.00%
	Total Expense:	**1,750,474.00**	**104,300.00**	**834,844.22**	**836,009.00**	**0.00**	**-836,009.00**	**-100.00%**
	Total Function: 9000 - 9000:	**-1,750,474.00**	**-104,300.00**	**-834,844.22**	**-810,944.00**	**0.00**	**810,944.00**	**-100.00%**
	Total Fund: 360 - 2019 GO BONDS & PROJECTS:	**-1,856,388.47**	**-884,300.00**	**-1,358,341.03**	**-1,333,276.00**	**0.00**	**1,333,276.00**	**-100.00%**

Budget Comparison Report

Account Number		2021-2022 Total Activity	2022-2023 Total Budget	2022-2023 YTD Activity Through Feb	Parent Budget 2022-2023 FY2023 Amend	Comparison 1 Budget 2023-2024 FY2024 Dept Request	Comparison 1 to Parent Budget Increase / (Decrease)	%
Fund: 361 - LIBRARY BUILDING ADDITION								
Function: 6021 - Finance								
Revenue								
361.6021.4610.000	INTEREST ON INVESTMENTS	14.98	0.00	17.16	30.00	30.00	0.00	0.00%
	Total Revenue:	**14.98**	**0.00**	**17.16**	**30.00**	**30.00**	**0.00**	**0.00%**
	Total Function: 6021 - Finance:	**14.98**	**0.00**	**17.16**	**30.00**	**30.00**	**0.00**	**0.00%**
	Total Fund: 361 - LIBRARY BUILDING ADDITION:	**14.98**	**0.00**	**17.16**	**30.00**	**30.00**	**0.00**	**0.00%**
Fund: 362 - 2020 GO BONDS								
Function: 2012 - Street Construction								
Expense								
362.2012.5233.000	ENGINEERING FEES	8,407.00	0.00	16,025.00	28,435.00	40,553.00	12,118.00	42.62%
362.2012.5331.000	PAYMENTS-OTHER ENTITIES	18,435.98	0.00	8,526.27	21,565.00	0.00	-21,565.00	-100.00%
362.2012.5342.000	CONTRACT-OUTSIDE HELP	0.00	927,473.00	0.00	0.00	1,180,000.00	1,180,000.00	0.00%
362.2012.5348.000	CONTRACT-OTHER	0.00	0.00	0.00	100,000.00	0.00	-100,000.00	-100.00%
	Total Expense:	**26,842.98**	**927,473.00**	**24,551.27**	**150,000.00**	**1,220,553.00**	**1,070,553.00**	**713.70%**
	Total Function: 2012 - Street Construction:	**26,842.98**	**927,473.00**	**24,551.27**	**150,000.00**	**1,220,553.00**	**1,070,553.00**	**713.70%**
Function: 2020 - Parking								
Expense								
362.2020.5230.000	CONSULTING & PROF FEES	255,724.21	0.00	0.00	0.00	0.00	0.00	0.00%
362.2020.5342.000	CONTRACT - OUTSIDE HELP	6,610.00	0.00	0.00	0.00	0.00	0.00	0.00%
362.2020.5785.000	LAND IMPROVEMENTS	26,403.42	0.00	0.00	0.00	0.00	0.00	0.00%
	Total Expense:	**288,737.63**	**0.00**	**0.00**	**0.00**	**0.00**	**0.00**	**0.00%**
	Total Function: 2020 - Parking:	**288,737.63**	**0.00**	**0.00**	**0.00**	**0.00**	**0.00**	**0.00%**
Function: 4030 - Parks								
Expense								
362.4030.5342.000	CONTRACT-OUTSIDE HELP	504,094.60	0.00	0.00	0.00	0.00	0.00	0.00%
	Total Expense:	**504,094.60**	**0.00**	**0.00**	**0.00**	**0.00**	**0.00**	**0.00%**
	Total Function: 4030 - Parks:	**504,094.60**	**0.00**	**0.00**	**0.00**	**0.00**	**0.00**	**0.00%**
Function: 5010 - Community Beautification								
Expense								
362.5010.5233.000	ENGINEERING FEES	756.00	0.00	0.00	0.00	0.00	0.00	0.00%
	Total Expense:	**756.00**	**0.00**	**0.00**	**0.00**	**0.00**	**0.00**	**0.00%**
	Total Function: 5010 - Community Beautification:	**756.00**	**0.00**	**0.00**	**0.00**	**0.00**	**0.00**	**0.00%**

Budget Comparison Report

Account Number		2021-2022 Total Activity	2022-2023 Total Budget	2022-2023 YTD Activity Through Feb	Parent Budget 2022-2023 FY2023 Amend	Comparison 1 Budget 2023-2024 FY2024 Dept Request	Comparison 1 to Parent Budget Increase / (Decrease)	%
Function: 6021 - Finance								
Revenue								
362.6021.4610.000	INTEREST ON INVESTMENTS	7,420.75	0.00	7,655.03	6,500.00	0.00	-6,500.00	-100.00%
	Total Revenue:	**7,420.75**	**0.00**	**7,655.03**	**6,500.00**	**0.00**	**-6,500.00**	**-100.00%**
	Total Function: 6021 - Finance:	**7,420.75**	**0.00**	**7,655.03**	**6,500.00**	**0.00**	**-6,500.00**	**-100.00%**
Function: 9000 - 9000								
Revenue								
362.9000.6500.110	TRANSFER IN - FUND 110	0.00	375,223.00	0.00	0.00	642,803.00	642,803.00	0.00%
362.9000.6500.360	TRANSFER IN - FUND 360	250,000.00	0.00	0.00	0.00	0.00	0.00	0.00%
362.9000.6500.363	TRANSFER IN - FUND 363	157,949.93	0.00	0.00	0.00	0.00	0.00	0.00%
	Total Revenue:	**407,949.93**	**375,223.00**	**0.00**	**0.00**	**642,803.00**	**642,803.00**	**0.00%**
	Total Function: 9000 - 9000:	**407,949.93**	**375,223.00**	**0.00**	**0.00**	**642,803.00**	**642,803.00**	**0.00%**
	Total Fund: 362 - 2020 GO BONDS:	**-405,060.53**	**-552,250.00**	**-16,896.24**	**-143,500.00**	**-577,750.00**	**-434,250.00**	**302.61%**
Fund: 363 - 2021 GO BONDS								
Function: 1099 - Police and Fire Building Exps								
Expense								
363.1099.5233.000	ENGINEERING FEES	0.00	0.00	0.00	5,000.00	15,000.00	10,000.00	200.00%
363.1099.5342.000	CONTRACT-OUTSIDE HELP	0.00	0.00	0.00	86,357.00	0.00	-86,357.00	-100.00%
363.1099.5718.000	MINOR EQUIPMENT	0.00	0.00	329.99	0.00	0.00	0.00	0.00%
	Total Expense:	**0.00**	**0.00**	**329.99**	**91,357.00**	**15,000.00**	**-76,357.00**	**-83.58%**
	Total Function: 1099 - Police and Fire Building Exps:	**0.00**	**0.00**	**329.99**	**91,357.00**	**15,000.00**	**-76,357.00**	**-83.58%**
Function: 2010 - Roads, Bridges, Sidewalks								
Expense								
363.2010.5233.000	ENGINEERING FEES	62,272.00	44,400.00	84,512.00	190,128.00	120,000.00	-70,128.00	-36.88%
363.2010.5342.000	CONTRACT - OUTSIDE HELP	0.00	738,800.00	268,556.05	768,557.00	1,577,600.00	809,043.00	105.27%
363.2010.5600.000	OPERATING SUPPLIES	0.00	0.00	11,717.32	11,800.00	0.00	-11,800.00	-100.00%
363.2010.5617.000	RM-OTHER	0.00	0.00	13,402.28	59,435.00	100,000.00	40,565.00	68.25%
363.2010.5718.000	MINOR EQUIPMENT	0.00	0.00	380.93	400.00	0.00	-400.00	-100.00%
	Total Expense:	**62,272.00**	**783,200.00**	**378,568.58**	**1,030,320.00**	**1,797,600.00**	**767,280.00**	**74.47%**
	Total Function: 2010 - Roads, Bridges, Sidewalks:	**62,272.00**	**783,200.00**	**378,568.58**	**1,030,320.00**	**1,797,600.00**	**767,280.00**	**74.47%**
Function: 2012 - Street Construction								
Revenue								
363.2012.4350.000	LOCAL GRANTS	125,000.00	600,000.00	25,000.00	525,000.00	0.00	-525,000.00	-100.00%
	Total Revenue:	**125,000.00**	**600,000.00**	**25,000.00**	**525,000.00**	**0.00**	**-525,000.00**	**-100.00%**
Expense								
363.2012.5233.000	ENGINEERING FEES	390,555.50	451,313.00	18,911.66	171,720.00	361,050.00	189,330.00	110.26%

Budget Comparison Report

Account Number		2021-2022 Total Activity	2022-2023 Total Budget	2022-2023 YTD Activity Through Feb	Parent Budget 2022-2023 FY2023 Amend	Comparison 1 Budget 2023-2024 FY2024 Dept Request	Comparison 1 to Parent Budget Increase / (Decrease)	%
363.2012.5251.000	LICENSE & PERMITS	0.00	0.00	755.00	755.00	0.00	-755.00	-100.00%
363.2012.5342.000	CONTRACT-OUTSIDE HELP	0.00	6,094,000.00	101,309.01	1,503,845.00	8,567,715.00	7,063,870.00	469.72%
363.2012.5348.000	CONTRACT-OTHER	0.00	0.00	0.00	150,000.00	0.00	-150,000.00	-100.00%
363.2012.5718.000	MINOR EQUIPMENT	0.00	0.00	16,847.71	0.00	0.00	0.00	0.00%
	Total Expense:	**390,555.50**	**6,545,313.00**	**137,823.38**	**1,826,320.00**	**8,928,765.00**	**7,102,445.00**	**388.89%**
	Total Function: 2012 - Street Construction:	**-265,555.50**	**-5,945,313.00**	**-112,823.38**	**-1,301,320.00**	**-8,928,765.00**	**-7,627,445.00**	**586.13%**
Function: 4030 - Parks								
Expense								
363.4030.5342.000	CONTRACT-OUTSIDE HELP	0.00	0.00	0.00	350,000.00	50,000.00	-300,000.00	-85.71%
	Total Expense:	**0.00**	**0.00**	**0.00**	**350,000.00**	**50,000.00**	**-300,000.00**	**-85.71%**
	Total Function: 4030 - Parks:	**0.00**	**0.00**	**0.00**	**350,000.00**	**50,000.00**	**-300,000.00**	**-85.71%**
Function: 6021 - Finance								
Revenue								
363.6021.4610.000	INTEREST ON INVESTMENTS	48,319.54	10,000.00	90,286.40	160,000.00	80,000.00	-80,000.00	-50.00%
363.6021.4990.000	DEBT ISSUANCE	9,130,000.00	0.00	0.00	0.00	0.00	0.00	0.00%
363.6021.4993.000	BOND PREMIUM	400,159.66	0.00	0.00	0.00	0.00	0.00	0.00%
	Total Revenue:	**9,578,479.20**	**10,000.00**	**90,286.40**	**160,000.00**	**80,000.00**	**-80,000.00**	**-50.00%**
Expense								
363.6021.5230.000	CONSULTING & PROF FEES	46,315.00	0.00	0.00	0.00	0.00	0.00	0.00%
363.6021.5234.000	LEGAL EXPENSES	16,000.00	0.00	0.00	0.00	0.00	0.00	0.00%
363.6021.5830.000	OTHER DEBT SERVICE EXP	300.00	0.00	0.00	0.00	0.00	0.00	0.00%
	Total Expense:	**62,615.00**	**0.00**	**0.00**	**0.00**	**0.00**	**0.00**	**0.00%**
	Total Function: 6021 - Finance:	**9,515,864.20**	**10,000.00**	**90,286.40**	**160,000.00**	**80,000.00**	**-80,000.00**	**-50.00%**
Function: 9000 - 9000								
Revenue								
363.9000.6500.121	TRANSFER IN - FUND 121 LOST	0.00	0.00	0.00	128,026.00	0.00	-128,026.00	-100.00%
363.9000.6500.354	TRANSFER IN - FUND 354	452,827.50	0.00	0.00	0.00	0.00	0.00	0.00%
363.9000.6500.360	TRANSFER IN - FUND 360	0.00	0.00	246,368.90	246,090.00	0.00	-246,090.00	-100.00%
363.9000.6500.364	TRANSFER IN - FUND 364 2022	0.00	0.00	0.00	0.00	2,463,464.00	2,463,464.00	0.00%
363.9000.6500.389	TRANSFER IN - FUND 389	0.00	2,000,000.00	0.00	0.00	2,461,741.00	2,461,741.00	0.00%
363.9000.6500.611	TRANSFER IN - FUND 611	0.00	740,000.00	0.00	0.00	523,900.00	523,900.00	0.00%
363.9000.6500.740	TRANSFER IN - FUND 740	0.00	77,326.00	0.00	0.00	0.00	0.00	0.00%
	Total Revenue:	**452,827.50**	**2,817,326.00**	**246,368.90**	**374,116.00**	**5,449,105.00**	**5,074,989.00**	**1,356.53%**
Expense								
363.9000.7500.110	TRANSFER IN - FUND 110 RUT	0.00	0.00	0.00	352,323.00	0.00	-352,323.00	-100.00%
363.9000.7500.355	TRANSFER OUT TO D&D 355	1,050,000.00	0.00	0.00	0.00	0.00	0.00	0.00%
363.9000.7500.360	TRANSFER OUT - 2019 GO BON	0.00	0.00	0.00	25,065.00	0.00	-25,065.00	-100.00%

Budget Comparison Report

Account Number		2021-2022 Total Activity	2022-2023 Total Budget	2022-2023 YTD Activity Through Feb	Parent Budget 2022-2023 FY2023 Amend	Comparison 1 Budget 2023-2024 FY2024 Dept Request	Comparison 1 to Parent Budget Increase / (Decrease)	%
363.9000.7500.362	TRANSFER TO 2020 GO	157,949.93	0.00	0.00	0.00	0.00	0.00	0.00%
363.9000.7500.395	TRANSFER OUT - FUND 395	0.00	0.00	0.00	5,796.00	7,000.00	1,204.00	20.77%
	Total Expense:	**1,207,949.93**	**0.00**	**0.00**	**383,184.00**	**7,000.00**	**-376,184.00**	**-98.17%**
	Total Function: 9000 - 9000:	**-755,122.43**	**2,817,326.00**	**246,368.90**	**-9,068.00**	**5,442,105.00**	**5,451,173.00**	**50,114.39%**
	Total Fund: 363 - 2021 GO BONDS:	**8,432,914.27**	**-3,901,187.00**	**-155,066.65**	**-2,622,065.00**	**-5,269,260.00**	**-2,647,195.00**	**100.96%**
Fund: 364 - 2022 GO BONDS								
Function: 2010 - Roads, Bridges, Sidewalks								
Expense								
364.2010.5342.000	CONTRACT - OUTSIDE HELP	0.00	4,150,000.00	0.00	100,000.00	301,786.00	201,786.00	201.79%
	Total Expense:	**0.00**	**4,150,000.00**	**0.00**	**100,000.00**	**301,786.00**	**201,786.00**	**201.79%**
	Total Function: 2010 - Roads, Bridges, Sidewalks:	**0.00**	**4,150,000.00**	**0.00**	**100,000.00**	**301,786.00**	**201,786.00**	**201.79%**
Function: 2011 - Sidewalks								
Expense								
364.2011.5233.000	ENGINEERING FEES	0.00	70,000.00	0.00	70,000.00	37,000.00	-33,000.00	-47.14%
364.2011.5342.000	CONTRACT - OUTSIDE HELP	0.00	530,000.00	0.00	0.00	507,000.00	507,000.00	0.00%
	Total Expense:	**0.00**	**600,000.00**	**0.00**	**70,000.00**	**544,000.00**	**474,000.00**	**677.14%**
	Total Function: 2011 - Sidewalks:	**0.00**	**600,000.00**	**0.00**	**70,000.00**	**544,000.00**	**474,000.00**	**677.14%**
Function: 2012 - Street Construction								
Expense								
364.2012.5233.000	ENGINEERING FEES	0.00	0.00	28,439.00	490,500.00	163,500.00	-327,000.00	-66.67%
	Total Expense:	**0.00**	**0.00**	**28,439.00**	**490,500.00**	**163,500.00**	**-327,000.00**	**-66.67%**
	Total Function: 2012 - Street Construction:	**0.00**	**0.00**	**28,439.00**	**490,500.00**	**163,500.00**	**-327,000.00**	**-66.67%**
Function: 2020 - Parking								
Expense								
364.2020.5233.000	ENGINEERING FEES	0.00	156,000.00	0.00	20,000.00	50,000.00	30,000.00	150.00%
364.2020.5342.000	CONTRACT - OUTSIDE HELP	0.00	234,000.00	0.00	234,000.00	809,500.00	575,500.00	245.94%
	Total Expense:	**0.00**	**390,000.00**	**0.00**	**254,000.00**	**859,500.00**	**605,500.00**	**238.39%**
	Total Function: 2020 - Parking:	**0.00**	**390,000.00**	**0.00**	**254,000.00**	**859,500.00**	**605,500.00**	**238.39%**
Function: 4030 - Parks								
Revenue								
364.4030.4350.000	LOCAL/COUNTY GRANTS	0.00	0.00	0.00	200,000.00	0.00	-200,000.00	-100.00%
	Total Revenue:	**0.00**	**0.00**	**0.00**	**200,000.00**	**0.00**	**-200,000.00**	**-100.00%**
Expense								
364.4030.5233.000	ENGINEERING FEES	0.00	0.00	37,682.50	50,000.00	0.00	-50,000.00	-100.00%

Account Number		2021-2022 Total Activity	2022-2023 Total Budget	2022-2023 YTD Activity Through Feb	Parent Budget 2022-2023 FY2023 Amend	Comparison 1 Budget 2023-2024 FY2024 Dept Request	Comparison 1 to Parent Budget Increase / (Decrease)	%
364.4030.5342.000	CONTRACT-OUTSIDE HELP	0.00	4,260,000.00	0.00	5,260,000.00	0.00	-5,260,000.00	-100.00%
	Total Expense:	**0.00**	**4,260,000.00**	**37,682.50**	**5,310,000.00**	**0.00**	**-5,310,000.00**	**-100.00%**
	Total Function: 4030 - Parks:	**0.00**	**-4,260,000.00**	**-37,682.50**	**-5,110,000.00**	**0.00**	**5,110,000.00**	**-100.00%**
Function: 6021 - Finance								
Revenue								
364.6021.4610.000	INTEREST ON INVESTMENTS	0.00	0.00	5,926.75	80,000.00	80,000.00	0.00	0.00%
364.6021.4990.000	DEBT ISSUANCE	0.00	10,000,000.00	9,555,000.00	9,555,000.00	0.00	-9,555,000.00	-100.00%
364.6021.4993.000	BOND PREMIUM	0.00	0.00	190,991.25	190,991.00	0.00	-190,991.00	-100.00%
	Total Revenue:	**0.00**	**10,000,000.00**	**9,751,918.00**	**9,825,991.00**	**80,000.00**	**-9,745,991.00**	**-99.19%**
Expense								
364.6021.5230.000	CONSULTING & PROF FEES	0.00	0.00	58,444.00	58,544.00	0.00	-58,544.00	-100.00%
364.6021.5234.000	LEGAL EXPENSES	0.00	0.00	0.00	104,000.00	0.00	-104,000.00	-100.00%
364.6021.5830.000	OTHER DEBT SERVICE EXP	0.00	0.00	300.00	300.00	0.00	-300.00	-100.00%
	Total Expense:	**0.00**	**0.00**	**58,744.00**	**162,844.00**	**0.00**	**-162,844.00**	**-100.00%**
	Total Function: 6021 - Finance:	**0.00**	**10,000,000.00**	**9,693,174.00**	**9,663,147.00**	**80,000.00**	**-9,583,147.00**	**-99.17%**
Function: 9000 - 9000								
Revenue								
364.9000.6500.121	TRANSFER IN - FUND 121 LOST	0.00	0.00	0.00	100,000.00	115,250.00	15,250.00	15.25%
364.9000.6500.615	TRANSFER IN - FUND 364	0.00	0.00	0.00	0.00	489,500.00	489,500.00	0.00%
	Total Revenue:	**0.00**	**0.00**	**0.00**	**100,000.00**	**604,750.00**	**504,750.00**	**504.75%**
Expense								
364.9000.7500.355	TRANSFER OUT OT D&D 355	0.00	600,000.00	0.00	0.00	0.00	0.00	0.00%
364.9000.7500.363	TRANSFER OUT - FUND 363 20	0.00	0.00	0.00	0.00	2,463,464.00	2,463,464.00	0.00%
	Total Expense:	**0.00**	**600,000.00**	**0.00**	**0.00**	**2,463,464.00**	**2,463,464.00**	**0.00%**
	Total Function: 9000 - 9000:	**0.00**	**-600,000.00**	**0.00**	**100,000.00**	**-1,858,714.00**	**-1,958,714.00**	**-1,958.71%**
	Total Fund: 364 - 2022 GO BONDS:	**0.00**	**0.00**	**9,627,052.50**	**3,738,647.00**	**-3,647,500.00**	**-7,386,147.00**	**-197.56%**
Fund: 365 - 2023 GO BONDS								
Function: 2010 - Roads, Bridges, Sidewalks								
Expense								
365.2010.5342.000	CONTRACT - OUTSIDE HELP	0.00	0.00	0.00	0.00	10,856,000.00	10,856,000.00	0.00%
	Total Expense:	**0.00**	**0.00**	**0.00**	**0.00**	**10,856,000.00**	**10,856,000.00**	**0.00%**
	Total Function: 2010 - Roads, Bridges, Sidewalks:	**0.00**	**0.00**	**0.00**	**0.00**	**10,856,000.00**	**10,856,000.00**	**0.00%**

Account Number					Parent Budget	Comparison 1 Budget 2023-2024 FY2024 Dept Request	Comparison 1 to Parent Budget Increase / (Decrease)	%
Function: 2011 - Sidewalks								
Expense								
365.2011.5342.000	CONTRACT - OUTSIDE HELP	0.00	0.00	0.00	0.00	500,000.00	500,000.00	0.00%
	Total Expense:	**0.00**	**0.00**	**0.00**	**0.00**	**500,000.00**	**500,000.00**	**0.00%**
	Total Function: 2011 - Sidewalks:	**0.00**	**0.00**	**0.00**	**0.00**	**500,000.00**	**500,000.00**	**0.00%**
Function: 6021 - Finance								
Revenue								
365.6021.4990.000	DEBT ISSUANCE	0.00	0.00	0.00	0.00	11,356,000.00	11,356,000.00	0.00%
	Total Revenue:	**0.00**	**0.00**	**0.00**	**0.00**	**11,356,000.00**	**11,356,000.00**	**0.00%**
	Total Function: 6021 - Finance:	**0.00**	**0.00**	**0.00**	**0.00**	**11,356,000.00**	**11,356,000.00**	**0.00%**
	Total Fund: 365 - 2023 GO BONDS:	**0.00**	**0.00**	**0.00**	**0.00**	**0.00**	**0.00**	**0.00%**
Fund: 381 - 2019 CY STREET,SIDEWALK,PARKING PROJECTS								
Function: 2011 - Sidewalks								
Expense								
381.2011.5233.000	ENGINEERING FEES	10,231.61	0.00	0.00	0.00	0.00	0.00	0.00%
381.2011.5342.000	CONTRACT - OUTSIDE HELP	550,966.74	0.00	0.00	0.00	0.00	0.00	0.00%
	Total Expense:	**561,198.35**	**0.00**	**0.00**	**0.00**	**0.00**	**0.00**	**0.00%**
	Total Function: 2011 - Sidewalks:	**561,198.35**	**0.00**	**0.00**	**0.00**	**0.00**	**0.00**	**0.00%**
Function: 2020 - Parking								
Revenue								
381.2020.4326.000	STATE REIMB	100,000.00	0.00	0.00	0.00	0.00	0.00	0.00%
	Total Revenue:	**100,000.00**	**0.00**	**0.00**	**0.00**	**0.00**	**0.00**	**0.00%**
Expense								
381.2020.5233.000	ENGINEERING FEES	30,135.32	0.00	0.00	0.00	0.00	0.00	0.00%
381.2020.5342.000	CONTRACT - OUTSIDE HELP	512,210.06	0.00	0.00	0.00	0.00	0.00	0.00%
	Total Expense:	**542,345.38**	**0.00**	**0.00**	**0.00**	**0.00**	**0.00**	**0.00%**
	Total Function: 2020 - Parking:	**-442,345.38**	**0.00**	**0.00**	**0.00**	**0.00**	**0.00**	**0.00%**
Function: 6021 - Finance								
Revenue								
381.6021.4610.000	INTEREST ON INVESTMENTS	2,121.06	0.00	0.00	0.00	0.00	0.00	0.00%
	Total Revenue:	**2,121.06**	**0.00**	**0.00**	**0.00**	**0.00**	**0.00**	**0.00%**
	Total Function: 6021 - Finance:	**2,121.06**	**0.00**	**0.00**	**0.00**	**0.00**	**0.00**	**0.00%**
Function: 9000 - 9000								
Revenue								
381.9000.6500.612	TRANSFER IN - FUND 612	288,550.00	0.00	0.00	0.00	0.00	0.00	0.00%

Budget Comparison Report

Account Number		2021-2022 Total Activity	2022-2023 Total Budget	2022-2023 YTD Activity Through Feb	Parent Budget 2022-2023 FY2023 Amend	Comparison 1 Budget 2023-2024 FY2024 Dept Request	Comparison 1 to Parent Budget Increase / (Decrease)	%
381.9000.6500.740	TRANSFER IN - FUND 740	0.00	0.00	0.00	0.00	0.00	0.00	0.00%
	Total Revenue:	**288,550.00**	**0.00**	**0.00**	**0.00**	**0.00**	**0.00**	**0.00%**
Expense								
381.9000.7500.395	TRANSFER OUT - FUND 395	150.02	0.00	0.00	0.00	0.00	0.00	0.00%
381.9000.7500.740	TRANSFER OUT - FUND 741	33,732.65	0.00	0.00	0.00	0.00	0.00	0.00%
	Total Expense:	**33,882.67**	**0.00**	**0.00**	**0.00**	**0.00**	**0.00**	**0.00%**
	Total Function: 9000 - 9000:	**254,667.33**	**0.00**	**0.00**	**0.00**	**0.00**	**0.00**	**0.00%**
Total Fund: 381 - 2019 CY STREET,SIDEWALK,PARKING PROJE		**-746,755.34**	**0.00**	**0.00**	**0.00**	**0.00**	**0.00**	**0.00%**
Fund: 383 - COLISEUM REMODEL								
Function: 4065 - Coliseum								
Revenue								
383.4065.4483.002	CONCESSIONS/COINS - OTHER	110.00	0.00	0.00	0.00	0.00	0.00	0.00%
383.4065.4820.000	COLISEUM CONTRIBUTIONS	100.00	0.00	0.00	0.00	0.00	0.00	0.00%
	Total Revenue:	**210.00**	**0.00**	**0.00**	**0.00**	**0.00**	**0.00**	**0.00%**
Expense								
383.4065.5230.000	CONSULTING & PROF FEES	1,170.00	0.00	0.00	0.00	0.00	0.00	0.00%
383.4065.5342.000	CONTRACT-OUTSIDE HELP	13,029.76	0.00	0.00	0.00	0.00	0.00	0.00%
383.4065.5750.000	OTHER CAP EQUIP > $5,000	14,400.00	0.00	0.00	0.00	0.00	0.00	0.00%
383.4065.5776.000	BUILDINGS & IMPROVEMENTS	3,712.43	0.00	0.00	0.00	0.00	0.00	0.00%
	Total Expense:	**32,312.19**	**0.00**	**0.00**	**0.00**	**0.00**	**0.00**	**0.00%**
	Total Function: 4065 - Coliseum:	**-32,102.19**	**0.00**	**0.00**	**0.00**	**0.00**	**0.00**	**0.00%**
Function: 6021 - Finance								
Revenue								
383.6021.4610.000	INTEREST ON INVESTMENTS	0.10	0.00	0.00	0.00	0.00	0.00	0.00%
	Total Revenue:	**0.10**	**0.00**	**0.00**	**0.00**	**0.00**	**0.00**	**0.00%**
	Total Function: 6021 - Finance:	**0.10**	**0.00**	**0.00**	**0.00**	**0.00**	**0.00**	**0.00%**
Function: 9000 - 9000								
Revenue								
383.9000.6500.360	TRANSFER IN - 2019 BONDS	32,102.09	0.00	0.00	0.00	0.00	0.00	0.00%
	Total Revenue:	**32,102.09**	**0.00**	**0.00**	**0.00**	**0.00**	**0.00**	**0.00%**
	Total Function: 9000 - 9000:	**32,102.09**	**0.00**	**0.00**	**0.00**	**0.00**	**0.00**	**0.00%**
	Total Fund: 383 - COLISEUM REMODEL:	**0.00**	**0.00**	**0.00**	**0.00**	**0.00**	**0.00**	**0.00%**

Budget Comparison Report

Account Number		2021-2022 Total Activity	2022-2023 Total Budget	2022-2023 YTD Activity Through Feb	Parent Budget 2022-2023 FY2023 Amend	Comparison 1 Budget 2023-2024 FY2024 Dept Request	Comparison 1 to Parent Budget Increase / (Decrease)	%
Fund: 389 - AMERICAN RESCUE PLAN								
Function: 1010 - Police Operations/Crime Prevention								
Expense								
389.1010.5230.000	CONSULTING & PROF FEES	0.00	0.00	36,641.70	65,398.00	121,733.00	56,335.00	86.14%
	Total Expense:	**0.00**	**0.00**	**36,641.70**	**65,398.00**	**121,733.00**	**56,335.00**	**86.14%**
Total Function: 1010 - Police Operations/Crime Prevention:		**0.00**	**0.00**	**36,641.70**	**65,398.00**	**121,733.00**	**56,335.00**	**86.14%**
Function: 6021 - Finance								
Revenue								
389.6021.4315.000	FEDERAL CAPITAL GRANT	1,993,589.42	1,986,933.00	1,993,589.41	1,993,590.00	0.00	-1,993,590.00	-100.00%
	Total Revenue:	**1,993,589.42**	**1,986,933.00**	**1,993,589.41**	**1,993,590.00**	**0.00**	**-1,993,590.00**	**-100.00%**
Total Function: 6021 - Finance:		**1,993,589.42**	**1,986,933.00**	**1,993,589.41**	**1,993,590.00**	**0.00**	**-1,993,590.00**	**-100.00%**
Function: 9000 - 9000								
Expense								
389.9000.7500.001	TRANSFER OUT - GEN FUND	187,901.62	288,147.00	0.00	288,147.00	49,389.00	-238,758.00	-82.86%
389.9000.7500.311	TRANSFER OUT - FUND 311 RI	0.00	850,000.00	0.00	600,000.00	0.00	-600,000.00	-100.00%
389.9000.7500.363	TRANSFER OUT - FUND 363 20	0.00	2,000,000.00	0.00	0.00	2,461,741.00	2,461,741.00	0.00%
	Total Expense:	**187,901.62**	**3,138,147.00**	**0.00**	**888,147.00**	**2,511,130.00**	**1,622,983.00**	**182.74%**
Total Function: 9000 - 9000:		**187,901.62**	**3,138,147.00**	**0.00**	**888,147.00**	**2,511,130.00**	**1,622,983.00**	**182.74%**
Total Fund: 389 - AMERICAN RESCUE PLAN:		**1,805,687.80**	**-1,151,214.00**	**1,956,947.71**	**1,040,045.00**	**-2,632,863.00**	**-3,672,908.00**	**-353.15%**
Fund: 392 - TIF DISTRICT III CAP PROJECTS								
Function: 6021 - Finance								
Revenue								
392.6021.4610.000	INTEREST ON INVESTMENTS	67.92	0.00	77.92	0.00	0.00	0.00	0.00%
	Total Revenue:	**67.92**	**0.00**	**77.92**	**0.00**	**0.00**	**0.00**	**0.00%**
Total Function: 6021 - Finance:		**67.92**	**0.00**	**77.92**	**0.00**	**0.00**	**0.00**	**0.00%**
Total Fund: 392 - TIF DISTRICT III CAP PROJECTS:		**67.92**	**0.00**	**77.92**	**0.00**	**0.00**	**0.00**	**0.00%**
Fund: 395 - ECONOMIC DEVELOPMENT PROJECT FUND								
Function: 2012 - Street Construction								
Revenue								
395.2012.4875.000	RFNDS/REIMB	0.00	0.00	0.00	273,909.00	0.00	-273,909.00	-100.00%
	Total Revenue:	**0.00**	**0.00**	**0.00**	**273,909.00**	**0.00**	**-273,909.00**	**-100.00%**
Expense								
395.2012.5233.000	ENGINEERING FEES	41,489.85	0.00	914.00	6,710.00	7,000.00	290.00	4.32%
395.2012.5779.000	CAPITAL CONSTRCT-STREETS	96,459.12	1,365,270.00	931,590.54	1,357,186.00	0.00	-1,357,186.00	-100.00%

Account Number		2021-2022 Total Activity	2022-2023 Total Budget	2022-2023 YTD Activity Through Feb	Parent Budget 2022-2023 FY2023 Amend	Comparison 1 Budget 2023-2024 FY2024 Dept Request	Comparison 1 to Parent Budget Increase / (Decrease)	%
395.2012.5781.000	LAND ACQUISITION	0.00	0.00	0.00	0.00	0.00	0.00	0.00%
	Total Expense:	**137,948.97**	**1,365,270.00**	**932,504.54**	**1,363,896.00**	**7,000.00**	**-1,356,896.00**	**-99.49%**
	Total Function: 2012 - Street Construction:	**-137,948.97**	**-1,365,270.00**	**-932,504.54**	**-1,089,987.00**	**-7,000.00**	**1,082,987.00**	**-99.36%**
Function: 5020 - Economic Development								
Revenue								
395.5020.4875.000	RFNDS/REIMB: ECON DEV	0.00	467,960.00	0.00	0.00	0.00	0.00	0.00%
	Total Revenue:	**0.00**	**467,960.00**	**0.00**	**0.00**	**0.00**	**0.00**	**0.00%**
Expense								
395.5020.5233.000	ENGINEERING FEES	9,535.00	0.00	0.00	0.00	0.00	0.00	0.00%
395.5020.5779.000	CAPITAL CONSTRCT-STREETS	1,167,347.06	0.00	0.00	0.00	0.00	0.00	0.00%
	Total Expense:	**1,176,882.06**	**0.00**	**0.00**	**0.00**	**0.00**	**0.00**	**0.00%**
	Total Function: 5020 - Economic Development:	**-1,176,882.06**	**467,960.00**	**0.00**	**0.00**	**0.00**	**0.00**	**0.00%**
Function: 9000 - 9000								
Revenue								
395.9000.6500.110	TRANSFER IN - RUT	0.00	428,520.00	0.00	149,881.00	0.00	-149,881.00	-100.00%
395.9000.6500.121	TRS IN LOST	22,779.20	284,235.00	0.00	284,235.00	0.00	-284,235.00	-100.00%
395.9000.6500.354	TRANSFER IN - FUND 354	73,529.90	0.00	0.00	0.00	0.00	0.00	0.00%
395.9000.6500.360	TRANSFER IN - FUND 360	1,218,371.91	104,300.00	344,190.08	344,190.00	0.00	-344,190.00	-100.00%
395.9000.6500.363	TRANSFER IN - FUND 363	0.00	0.00	0.00	5,796.00	7,000.00	1,204.00	20.77%
395.9000.6500.381	TRANSFER IN - 2019 CY STREET	150.02	0.00	0.00	0.00	0.00	0.00	0.00%
395.9000.6500.611	TRANSFER IN - FUND 611	0.00	63,361.00	0.00	74,610.00	0.00	-74,610.00	-100.00%
395.9000.6500.740	TRANSFER IN - FUND 740	0.00	236,405.00	0.00	236,405.00	0.00	-236,405.00	-100.00%
	Total Revenue:	**1,314,831.03**	**1,116,821.00**	**344,190.08**	**1,095,117.00**	**7,000.00**	**-1,088,117.00**	**-99.36%**
	Total Function: 9000 - 9000:	**1,314,831.03**	**1,116,821.00**	**344,190.08**	**1,095,117.00**	**7,000.00**	**-1,088,117.00**	**-99.36%**
Total Fund: 395 - ECONOMIC DEVELOPMENT PROJECT FUND:		**0.00**	**219,511.00**	**-588,314.46**	**5,130.00**	**0.00**	**-5,130.00**	**-100.00%**
Fund: 610 - WATER POLLUTION CONTROL								
Function: 8015 - Sewer & Sewage Disposal								
Revenue								
610.8015.4875.000	REFUNDS:REIMBURSEMENTS	1,485.65	0.00	17,524.26	12,429.00	0.00	-12,429.00	-100.00%
	Total Revenue:	**1,485.65**	**0.00**	**17,524.26**	**12,429.00**	**0.00**	**-12,429.00**	**-100.00%**
Expense								
610.8015.5010.010	REGULAR-NON UNION	953,468.52	990,926.00	646,111.65	993,643.00	1,012,857.00	19,214.00	1.93%
610.8015.5020.010	OVERTIME-NON UNION	16,028.95	20,000.00	10,605.75	20,000.00	20,000.00	0.00	0.00%
610.8015.5020.070	OVERTIME-PT TEMP	0.00	0.00	18.00	0.00	0.00	0.00	0.00%
610.8015.5030.070	PART-TIME TEMPORARY	3,080.75	5,000.00	2,784.00	5,000.00	5,000.00	0.00	0.00%
610.8015.5050.060	PART-TIME REGULAR	21,230.99	25,814.00	16,884.28	26,314.00	26,716.00	402.00	1.53%

Budget Comparison Report

Account Number		2021-2022 Total Activity	2022-2023 Total Budget	2022-2023 YTD Activity Through Feb	Parent Budget 2022-2023 FY2023 Amend	Comparison 1 Budget 2023-2024 FY2024 Dept Request	Comparison 1 to Parent Budget Increase / (Decrease)	%
610.8015.5057.010	CAR REIMB-NON UNION	589.64	585.00	315.00	540.00	540.00	0.00	0.00%
610.8015.5060.010	TERM PAYOUTS-NON UNION	3,899.07	0.00	0.00	0.00	0.00	0.00	0.00%
610.8015.5061.000	RHSA PAYOUT	0.00	13,700.00	0.00	0.00	25,975.00	25,975.00	0.00%
610.8015.5061.010	RHSA PAYOUTS-NON UNION	15,154.77	0.00	10,862.42	10,863.00	0.00	-10,863.00	-100.00%
610.8015.5101.010	SOCIAL SECURITY-NON UNION	57,695.13	60,831.00	38,673.57	60,990.00	62,572.00	1,582.00	2.59%
610.8015.5101.060	SOCIAL SECURITY-PT REGULAR	1,316.35	1,600.00	1,046.83	1,631.00	1,656.00	25.00	1.53%
610.8015.5101.070	SOCIAL SECURITY-PT TEMP	191.01	310.00	173.72	310.00	310.00	0.00	0.00%
610.8015.5102.010	MEDICARE-NON UNION	13,569.41	14,376.00	9,130.96	14,416.00	14,694.00	278.00	1.93%
610.8015.5102.060	MEDICARE-PT REGULAR	307.84	374.00	244.80	381.00	387.00	6.00	1.57%
610.8015.5102.070	MEDICARE-TEMPORARY	44.67	73.00	40.63	73.00	73.00	0.00	0.00%
610.8015.5111.010	IPERS-NON UNION	91,522.81	93,594.00	60,705.80	92,562.00	95,665.00	3,103.00	3.35%
610.8015.5111.060	IPERS-PT REGULAR	2,004.19	2,437.00	1,546.67	2,437.00	2,522.00	85.00	3.49%
610.8015.5121.010	GRP INSUR-NON UNION	143,128.20	158,802.00	104,726.04	167,780.00	187,835.00	20,055.00	11.95%
610.8015.5122.000	RETIREES GRP HLTH INS	9,351.10	12,876.00	0.00	0.00	0.00	0.00	0.00%
610.8015.5123.010	WORKCOMP-NON UNION	10,093.53	18,627.00	12,352.52	18,649.00	19,277.00	628.00	3.37%
610.8015.5123.060	WORKCOMP-PT REGULAR	240.12	541.00	344.02	542.00	561.00	19.00	3.51%
610.8015.5123.070	WORKCOMP-TEMPORARY	34.84	105.00	58.84	105.00	105.00	0.00	0.00%
610.8015.5132.000	CLOTHING EXPENSE	5,042.79	5,560.00	2,676.46	5,560.00	6,560.00	1,000.00	17.99%
610.8015.5151.000	PHYSICALS/IMMUNIZATIONS	875.00	875.00	350.00	875.00	875.00	0.00	0.00%
610.8015.5210.000	ADVERTISING & LEGAL PUB	0.00	1,000.00	28.28	1,000.00	1,000.00	0.00	0.00%
610.8015.5216.000	BACKGROUND CHECKS	50.00	60.00	10.00	60.00	60.00	0.00	0.00%
610.8015.5220.000	COLLECTION COSTS/REFUNDS	95,995.16	99,200.00	56,368.01	99,200.00	99,200.00	0.00	0.00%
610.8015.5230.000	CONSULTING & PROF FEES	275.00	0.00	365.00	275.00	275.00	0.00	0.00%
610.8015.5231.000	ACCOUNTING FEES	73,500.00	73,025.00	48,683.36	73,025.00	76,401.00	3,376.00	4.62%
610.8015.5232.000	AUDITING FEES	4,710.00	5,240.00	5,220.00	5,220.00	5,430.00	210.00	4.02%
610.8015.5233.000	ENGINEERING FEES	76,672.35	30,000.00	2,645.75	30,000.00	30,000.00	0.00	0.00%
610.8015.5234.000	LEGAL EXPENSES	0.00	2,500.00	82.50	2,500.00	2,500.00	0.00	0.00%
610.8015.5251.000	LICENSE & PERMITS	1,495.50	2,700.00	1,595.91	2,700.00	2,700.00	0.00	0.00%
610.8015.5280.000	DUES, MEMBER, SUBSCRIPTN	1,314.57	1,200.00	767.19	1,200.00	1,450.00	250.00	20.83%
610.8015.5290.000	INSURANCE - GENERAL	77,292.85	85,598.00	0.00	103,205.00	123,846.00	20,641.00	20.00%
610.8015.5300.000	INSURANCE - TORT LIAB	13,312.37	12,803.00	0.00	15,158.00	18,190.00	3,032.00	20.00%
610.8015.5339.000	MEDICAL CLAIMS PAID BY CITY	430.00	500.00	437.68	500.00	500.00	0.00	0.00%
610.8015.5339.010	MEDICAL CLAIMS PAID BY CITY	0.00	500.00	0.00	500.00	500.00	0.00	0.00%
610.8015.5342.000	CONTRACT-OUTSIDE HELP	156,549.21	280,000.00	41,337.47	180,000.00	235,000.00	55,000.00	30.56%
610.8015.5344.000	CONTRACT-MAINTENANCE	4,674.35	35,000.00	6,209.41	35,000.00	35,000.00	0.00	0.00%
610.8015.5347.000	CONTRACT-SOFTWARE MAINT	4,374.90	4,250.00	6,897.50	4,250.00	4,250.00	0.00	0.00%
610.8015.5351.000	CONTRACT-CONCRETE REPAIR	854,885.05	10,000.00	52,351.07	52,351.00	10,000.00	-42,351.00	-80.90%
610.8015.5360.000	POSTAGE & SHIPPING	502.74	1,400.00	576.52	1,400.00	1,400.00	0.00	0.00%
610.8015.5380.000	RENTS & LEASES	928.85	2,500.00	216.00	2,500.00	2,500.00	0.00	0.00%

Budget Comparison Report

Account Number		2021-2022 Total Activity	2022-2023 Total Budget	2022-2023 YTD Activity Through Feb	Parent Budget 2022-2023 FY2023 Amend	Comparison 1 Budget 2023-2024 FY2024 Dept Request	Comparison 1 to Parent Budget Increase / (Decrease)	%
610.8015.5386.000	CONTRACT LAWN CARE	4,570.00	9,500.00	5,630.00	9,500.00	10,500.00	1,000.00	10.53%
610.8015.5410.000	REPAIRS & MAINTENANCE	79,161.07	84,000.00	60,537.92	84,000.00	75,000.00	-9,000.00	-10.71%
610.8015.5440.000	TAXES PAID	9,656.00	10,000.00	4,807.00	10,000.00	10,000.00	0.00	0.00%
610.8015.5441.000	SALES TAXES PAID/RECEIVED	14,813.63	50,000.00	6,154.80	20,000.00	20,000.00	0.00	0.00%
610.8015.5450.000	TELEPHONE/OTHR COMMNCT	9,782.87	11,000.00	6,751.44	11,000.00	12,000.00	1,000.00	9.09%
610.8015.5460.000	CONFERENCE EXPENSE	4,265.00	7,500.00	1,460.00	7,500.00	7,500.00	0.00	0.00%
610.8015.5461.000	TRAVEL - AIRFARE	0.00	0.00	673.19	674.00	0.00	-674.00	-100.00%
610.8015.5462.000	TRAVEL-OTHER	161.55	200.00	211.76	212.00	200.00	-12.00	-5.66%
610.8015.5465.000	TRAVEL - HOTEL/MOTEL	1,118.36	1,600.00	1,644.24	1,645.00	1,600.00	-45.00	-2.74%
610.8015.5481.000	ELECTRICITY	356,567.63	390,000.00	240,803.26	390,000.00	405,000.00	15,000.00	3.85%
610.8015.5482.000	NATURAL GAS	79,749.18	80,000.00	63,443.97	80,000.00	80,000.00	0.00	0.00%
610.8015.5483.000	WATER	11,642.91	12,000.00	6,872.62	12,000.00	12,000.00	0.00	0.00%
610.8015.5484.000	PROPANE	80.37	230.00	73.83	230.00	230.00	0.00	0.00%
610.8015.5485.000	STORM WATER FEES	2,453.13	2,453.00	2,453.13	2,454.00	2,454.00	0.00	0.00%
610.8015.5487.000	FUEL OIL	0.00	2,500.00	0.00	2,500.00	2,500.00	0.00	0.00%
610.8015.5565.000	VEHICLE OPER/MAINT SPPLY	3,052.35	5,500.00	3,932.68	5,500.00	6,500.00	1,000.00	18.18%
610.8015.5570.000	VEHICLE GAS	3,613.37	3,500.00	3,531.08	5,000.00	5,500.00	500.00	10.00%
610.8015.5571.000	VEHICLE DIESEL FUEL	524.31	900.00	554.88	900.00	1,100.00	200.00	22.22%
610.8015.5600.000	OPERATING SUPPLIES	131,038.54	200,000.00	51,412.91	165,000.00	165,000.00	0.00	0.00%
610.8015.5603.000	LAB EXPENSES	45,947.76	55,000.00	25,506.97	55,000.00	65,000.00	10,000.00	18.18%
610.8015.5605.000	OFFICE SUPPLIES	1,775.64	1,500.00	800.88	1,500.00	1,500.00	0.00	0.00%
610.8015.5612.000	COMPUTER COMPONENTS	197.71	3,000.00	543.61	3,000.00	3,000.00	0.00	0.00%
610.8015.5703.000	MINOR COMPUTER	3,630.95	4,000.00	0.00	8,000.00	4,000.00	-4,000.00	-50.00%
610.8015.5704.000	MINOR SOFTWARE <$5,000	475.00	0.00	0.00	0.00	0.00	0.00	0.00%
610.8015.5718.000	MINOR EQUIP, UNCLASSFIED	150,653.32	117,600.00	47,066.02	60,000.00	60,000.00	0.00	0.00%
610.8015.5740.000	COMPUTER EQUIP > $5,000	0.00	60,000.00	0.00	0.00	0.00	0.00	0.00%
610.8015.5741.000	COMPUTER SOFTWARE > 5,00	0.00	105,000.00	0.00	5,000.00	0.00	-5,000.00	-100.00%
610.8015.5750.000	OTHER CAP EQUIP > $5,000	147,593.87	702,600.00	135,364.79	329,087.00	1,123,500.00	794,413.00	241.40%
610.8015.5776.000	BUILDINGS & IMPROVEMENTS	18,075.00	93,000.00	115.00	68,000.00	132,000.00	64,000.00	94.12%
610.8015.5810.000	PRINCIPAL REDEMPTION	17,387.56	0.00	0.00	0.00	540,000.00	540,000.00	0.00%
610.8015.5820.000	INTEREST PAYMENTS	27.58	0.00	0.00	13,362.00	128,738.00	115,376.00	863.46%
610.8015.5980.000	REFUNDS/REIMB	23,796.30	14,000.00	17,709.65	74,000.00	14,000.00	-60,000.00	-81.08%
	Total Expense:	**3,837,643.54**	**4,101,065.00**	**1,831,499.24**	**3,457,779.00**	**5,023,204.00**	**1,565,425.00**	**45.27%**
	Total Function: 8015 - Sewer & Sewage Disposal:	**-3,836,157.89**	**-4,101,065.00**	**-1,813,974.98**	**-3,445,350.00**	**-5,023,204.00**	**-1,577,854.00**	**45.80%**
Function: 8016 - Sanitary Sewer								
Revenue								
610.8016.4875.000	REFUNDS:REIMBURSEMENTS	76.70	0.00	13.01	15.00	0.00	-15.00	-100.00%
	Total Revenue:	**76.70**	**0.00**	**13.01**	**15.00**	**0.00**	**-15.00**	**-100.00%**

Budget Comparison Report

Account Number		2021-2022 Total Activity	2022-2023 Total Budget	2022-2023 YTD Activity Through Feb	Parent Budget 2022-2023 FY2023 Amend	Comparison 1 Budget 2023-2024 FY2024 Dept Request	Comparison 1 to Parent Budget Increase / (Decrease)	%
Expense								
610.8016.5010.010	REGULAR-NON UNION	91,067.78	155,633.00	96,237.96	156,902.00	163,231.00	6,329.00	4.03%
610.8016.5010.040	REGULAR-PPME UNION	158,286.47	174,490.00	114,660.21	177,490.00	153,261.00	-24,229.00	-13.65%
610.8016.5020.040	OVERTIME-PPME UNION	2,127.71	5,000.00	861.62	5,000.00	5,000.00	0.00	0.00%
610.8016.5060.010	TERM PAYOUTS-NON UNION	1,559.68	0.00	0.00	0.00	0.00	0.00	0.00%
610.8016.5060.040	TERM PAYOUTS-PPME UNION	1,779.76	0.00	281.78	0.00	0.00	0.00	0.00%
610.8016.5061.010	RHSA PAYOUT	0.00	0.00	0.00	0.00	12,000.00	12,000.00	0.00%
610.8016.5101.010	SOCIAL SECURITY-NON UNION	5,475.57	9,649.00	5,725.50	9,728.00	10,120.00	392.00	4.03%
610.8016.5101.040	SOCIAL SECURITY-PPME UNIO	9,616.80	10,818.00	6,931.99	11,004.00	9,502.00	-1,502.00	-13.65%
610.8016.5102.010	MEDICARE-NON UNION	1,280.85	2,257.00	1,339.25	2,275.00	2,367.00	92.00	4.04%
610.8016.5102.040	MEDICARE-PPME UNION	2,248.88	2,530.00	1,621.22	2,574.00	2,222.00	-352.00	-13.68%
610.8016.5111.010	IPERS-NON UNION	8,597.09	14,692.00	8,950.15	14,677.00	15,409.00	732.00	4.99%
610.8016.5111.040	IPERS-PPME UNION	15,143.51	16,472.00	9,402.69	16,472.00	14,468.00	-2,004.00	-12.17%
610.8016.5121.010	GRP INSUR-NON UNION	12,262.55	22,259.00	14,946.62	23,076.00	24,363.00	1,287.00	5.58%
610.8016.5121.040	GRP INSUR-PPME UNION	32,324.52	35,493.00	23,155.29	37,315.00	39,572.00	2,257.00	6.05%
610.8016.5122.000	RETIREES GRP HLTH INS	15,382.90	17,642.00	8,047.88	12,523.00	14,394.00	1,871.00	14.94%
610.8016.5123.010	WORKCOMP-NON UNION	1,277.09	2,348.00	2,174.68	2,347.00	2,473.00	126.00	5.37%
610.8016.5123.040	WORKCOMP-PPME UNION	3,534.42	3,659.00	4,106.33	3,664.00	3,218.00	-446.00	-12.17%
610.8016.5132.000	CLOTHING EXPENSE	1,110.26	1,500.00	391.28	1,500.00	1,500.00	0.00	0.00%
610.8016.5151.000	PHYSICALS/IMMUNIZATIONS	233.40	315.00	250.76	315.00	315.00	0.00	0.00%
610.8016.5192.070	UNEMPLOYMENT-TEMPORAR	0.00	0.00	1,636.33	0.00	0.00	0.00	0.00%
610.8016.5210.000	ADVERTISING & LEGAL PUB	52.55	0.00	15.00	15.00	0.00	-15.00	-100.00%
610.8016.5216.000	BACKGROUND CHECKS	24.00	0.00	0.00	0.00	0.00	0.00	0.00%
610.8016.5230.000	CONSULTING & PROF FEES	3,476.62	3,000.00	1,690.80	7,500.00	7,500.00	0.00	0.00%
610.8016.5233.000	ENGINEERING FEES	89,368.25	307,791.00	696.00	696.00	0.00	-696.00	-100.00%
610.8016.5234.000	LEGAL EXPENSES	0.00	40,398.00	412.50	2,000.00	2,000.00	0.00	0.00%
610.8016.5251.000	LICENSE & PERMITS	85.50	100.00	39.30	100.00	100.00	0.00	0.00%
610.8016.5260.000	DAMAGES/TORT LIAB CLAIMS	0.00	0.00	1,093.47	0.00	0.00	0.00	0.00%
610.8016.5280.000	DUES, MEMBER, SUBSCRIPTN	100.00	2,494.00	72.00	2,494.00	2,494.00	0.00	0.00%
610.8016.5290.000	INSURANCE - GENERAL	6,595.91	7,389.00	0.00	9,460.00	11,352.00	1,892.00	20.00%
610.8016.5300.000	INSURANCE - TORT LIAB	2,856.62	2,958.00	0.00	2,728.00	3,274.00	546.00	20.01%
610.8016.5339.000	MEDICAL CLAIMS PAID BY CIT	69.56	500.00	164.30	500.00	500.00	0.00	0.00%
610.8016.5342.000	CONTRACT-OUTSIDE HELP	471.53	4,049,755.00	358.20	10,000.00	10,000.00	0.00	0.00%
610.8016.5344.000	CONTRACT-MAINTENANCE	62,450.50	90,000.00	379.83	5,000.00	5,000.00	0.00	0.00%
610.8016.5347.000	CONTRACT-SOFTWARE MAINT	10,405.94	12,000.00	12,497.38	12,800.00	12,800.00	0.00	0.00%
610.8016.5360.000	POSTAGE & SHIPPING	39.18	200.00	0.00	200.00	200.00	0.00	0.00%
610.8016.5380.000	RENTS & LEASES	0.00	300.00	100.00	300.00	300.00	0.00	0.00%
610.8016.5410.000	REPAIRS & MAINTENANCE	5,001.93	18,000.00	6,636.35	18,000.00	18,000.00	0.00	0.00%
610.8016.5412.000	REPAIRS & MAINT LIFT STATIO	9,740.53	83,000.00	730.25	73,000.00	15,000.00	-58,000.00	-79.45%

Budget Comparison Report

Account Number		2021-2022 Total Activity	2022-2023 Total Budget	2022-2023 YTD Activity Through Feb	Parent Budget 2022-2023 FY2023 Amend	Comparison 1 Budget 2023-2024 FY2024 Dept Request	Comparison 1 to Parent Budget Increase / (Decrease)	%
610.8016.5450.000	TELEPHONE/OTHR COMMNCT	4,939.02	4,750.00	3,404.74	4,750.00	4,750.00	0.00	0.00%
610.8016.5460.000	CONFERENCE EXPENSE	420.00	2,500.00	0.00	2,500.00	2,500.00	0.00	0.00%
610.8016.5481.000	ELECTRICITY	12,209.09	14,600.00	7,817.75	15,600.00	16,000.00	400.00	2.56%
610.8016.5482.000	NATURAL GAS	1,769.80	1,200.00	1,549.00	1,200.00	1,200.00	0.00	0.00%
610.8016.5565.000	VEHICLE OPER/MAINT SPPLY	5,254.98	6,000.00	1,852.78	6,000.00	6,000.00	0.00	0.00%
610.8016.5570.000	VEHICLE GAS	4,349.38	4,000.00	3,221.93	5,700.00	5,700.00	0.00	0.00%
610.8016.5571.000	VEHICLE DIESEL FUEL	1,265.60	1,600.00	1,831.69	3,600.00	3,600.00	0.00	0.00%
610.8016.5600.000	OPERATING SUPPLIES	17,088.16	18,000.00	9,195.66	18,000.00	18,000.00	0.00	0.00%
610.8016.5605.000	OFFICE SUPPLIES	140.75	1,000.00	0.00	1,000.00	1,000.00	0.00	0.00%
610.8016.5612.000	COMPUTER COMPONENTS	0.00	1,000.00	39.00	1,000.00	1,000.00	0.00	0.00%
610.8016.5615.000	LIFT STATION OPERATING SUP	3,878.70	18,000.00	2,321.58	10,000.00	18,000.00	8,000.00	80.00%
610.8016.5702.000	MINOR OFFICE FURN/EQIUP	0.00	1,000.00	0.00	1,000.00	1,000.00	0.00	0.00%
610.8016.5703.000	MINOR COMPUTER	214.80	3,000.00	0.00	8,400.00	6,000.00	-2,400.00	-28.57%
610.8016.5718.000	MINOR EQUIP, UNCLASSFIED	2,041.92	5,000.00	161.40	5,000.00	5,000.00	0.00	0.00%
610.8016.5719.000	MINOR EQUIP, LIFT STATIONS	6,413.00	8,500.00	1,806.00	8,500.00	16,500.00	8,000.00	94.12%
610.8016.5750.000	OTHER CAP EQUIP > $5,000	24,523.94	342,000.00	335,108.90	356,109.00	20,000.00	-336,109.00	-94.38%
610.8016.5765.000	LIFT STATIONS	0.00	143,000.00	32,212.70	65,000.00	73,000.00	8,000.00	12.31%
610.8016.5776.000	BUILDINGS & IMPROVEMENTS	0.00	0.00	528.40	2,900.00	3,000.00	100.00	3.45%
610.8016.5810.000	PRINCIPAL REDEMPTION	1,467,000.00	1,493,000.00	131,000.00	1,493,000.00	1,513,000.00	20,000.00	1.34%
610.8016.5820.000	INTEREST PAYMENTS	205,415.92	182,597.00	91,982.00	182,597.00	158,344.00	-24,253.00	-13.28%
610.8016.5830.000	OTHER DEBT SERV EXP	1,700.00	1,700.00	850.00	1,700.00	1,700.00	0.00	0.00%
	Total Expense:	**2,312,672.92**	**7,345,089.00**	**950,490.45**	**2,815,211.00**	**2,437,229.00**	**-377,982.00**	**-13.43%**
	Total Function: 8016 - Sanitary Sewer:	**-2,312,596.22**	**-7,345,089.00**	**-950,477.44**	**-2,815,196.00**	**-2,437,229.00**	**377,967.00**	**-13.43%**
Function: 9000 - 9000								
Revenue								
610.9000.6500.611	TR FRM WPCP REVENUE	7,005,649.07	11,949,972.00	2,766,935.56	6,764,364.00	7,964,951.00	1,200,587.00	17.75%
	Total Revenue:	**7,005,649.07**	**11,949,972.00**	**2,766,935.56**	**6,764,364.00**	**7,964,951.00**	**1,200,587.00**	**17.75%**
Expense								
610.9000.7500.200	TRANSFER OUT - DEBT SERVIC	492,718.00	503,818.00	0.00	503,818.00	504,518.00	700.00	0.14%
610.9000.7500.612	TRANSFER OUT - FUND 612	366,642.10	0.00	0.00	0.00	0.00	0.00	0.00%
	Total Expense:	**859,360.10**	**503,818.00**	**0.00**	**503,818.00**	**504,518.00**	**700.00**	**0.14%**
	Total Function: 9000 - 9000:	**6,146,288.97**	**11,446,154.00**	**2,766,935.56**	**6,260,546.00**	**7,460,433.00**	**1,199,887.00**	**19.17%**
	Total Fund: 610 - WATER POLLUTION CONTROL:	**-2,465.14**	**0.00**	**2,483.14**	**0.00**	**0.00**	**0.00**	**0.00%**
Fund: 611 - WPCP REVENUE								
Function: 6021 - Finance								
Revenue								
611.6021.4610.000	INTEREST ON INVESTMENTS	182,897.05	100,000.00	254,763.13	350,000.00	100,000.00	-250,000.00	-71.43%

Budget Comparison Report

Account Number		2021-2022 Total Activity	2022-2023 Total Budget	2022-2023 YTD Activity Through Feb	Parent Budget 2022-2023 FY2023 Amend	Comparison 1 Budget 2023-2024 FY2024 Dept Request	Comparison 1 to Parent Budget Increase / (Decrease)	%
611.6021.4990.000	DEBT ISSUANCE	0.00	4,000,000.00	0.00	0.00	0.00	0.00	0.00%
	Total Revenue:	**182,897.05**	**4,100,000.00**	**254,763.13**	**350,000.00**	**100,000.00**	**-250,000.00**	**-71.43%**
	Total Function: 6021 - Finance:	**182,897.05**	**4,100,000.00**	**254,763.13**	**350,000.00**	**100,000.00**	**-250,000.00**	**-71.43%**
Function: 8015 - Sewer & Sewage Disposal								
Revenue								
611.8015.4230.000	MISC BUSNESS LIC/PRMTS	1,700.00	3,400.00	2,475.00	1,725.00	1,700.00	-25.00	-1.45%
611.8015.4310.000	WPCP FED OPER GRT/REIMB	0.00	96.00	0.00	0.00	0.00	0.00	0.00%
611.8015.4440.000	JBS SEWER CHARGES	2,390,513.57	2,320,000.00	1,741,481.38	2,320,000.00	2,320,000.00	0.00	0.00%
611.8015.4441.000	SEWER FEES	5,411,841.22	5,600,000.00	3,676,046.47	5,500,000.00	5,550,000.00	50,000.00	0.91%
611.8015.4442.000	SEWER CONNECTION CHARGE	4,812.00	4,000.00	300.00	4,000.00	4,000.00	0.00	0.00%
611.8015.4443.000	LAB TESTING FEES	41,851.00	49,000.00	30,921.00	42,000.00	42,000.00	0.00	0.00%
611.8015.4444.000	REFUSE HAULING & DUMPING	60,598.99	75,000.00	46,385.72	75,000.00	75,000.00	0.00	0.00%
611.8015.4622.000	FARM INCOME	36,987.03	0.00	6,364.45	36,000.00	0.00	-36,000.00	-100.00%
611.8015.4875.000	REFND/REIMB: WPCP	6,490.13	0.00	823.10	1,000.00	0.00	-1,000.00	-100.00%
611.8015.4875.590	REFND/REIMB: SAN SWR	30.79	0.00	0.00	0.00	0.00	0.00	0.00%
611.8015.4876.000	MISC REV: WPCP	169.02	0.00	160.44	175.00	0.00	-175.00	-100.00%
	Total Revenue:	**7,954,993.75**	**8,051,496.00**	**5,504,957.56**	**7,979,900.00**	**7,992,700.00**	**12,800.00**	**0.16%**
	Total Function: 8015 - Sewer & Sewage Disposal:	**7,954,993.75**	**8,051,496.00**	**5,504,957.56**	**7,979,900.00**	**7,992,700.00**	**12,800.00**	**0.16%**
Function: 8016 - Sanitary Sewer								
Revenue								
611.8016.4875.000	REFUNDS:REIMBURSEMENTS	41.32	0.00	0.00	0.00	0.00	0.00	0.00%
611.8016.4878.000	REFUNDS/REIMBURSEMENTS	164.41	0.00	0.00	0.00	0.00	0.00	0.00%
611.8016.4879.000	REBATES	0.00	0.00	60.98	3.00	0.00	-3.00	-100.00%
	Total Revenue:	**205.73**	**0.00**	**60.98**	**3.00**	**0.00**	**-3.00**	**-100.00%**
	Total Function: 8016 - Sanitary Sewer:	**205.73**	**0.00**	**60.98**	**3.00**	**0.00**	**-3.00**	**-100.00%**
Function: 9000 - 9000								
Revenue								
611.9000.6500.121	TRANSFER IN - FUND 121	0.00	0.00	18,580.00	18,580.00	0.00	-18,580.00	-100.00%
	Total Revenue:	**0.00**	**0.00**	**18,580.00**	**18,580.00**	**0.00**	**-18,580.00**	**-100.00%**
Expense								
611.9000.7500.363	TRANSFER OUT - FUND 363	0.00	740,000.00	0.00	0.00	523,900.00	523,900.00	0.00%
611.9000.7500.395	TRANSFER OUT - FUND 395	0.00	63,361.00	0.00	74,610.00	0.00	-74,610.00	-100.00%
611.9000.7500.610	TR TO OPERATING FUND	7,005,649.07	11,949,972.00	2,766,935.56	6,764,364.00	7,964,951.00	1,200,587.00	17.75%
611.9000.7500.612	TR TO WPCP REV BOND FUND	5,873.00	0.00	0.00	0.00	0.00	0.00	0.00%
611.9000.7500.615	TRANSFER OUT - FUND 615	125,005.50	0.00	90,135.15	47,402.00	447,500.00	400,098.00	844.05%

Account Number		2021-2022 Total Activity	2022-2023 Total Budget	2022-2023 YTD Activity Through Feb	Parent Budget 2022-2023 FY2023 Amend	Comparison 1 Budget 2023-2024 FY2024 Dept Request	Comparison 1 to Parent Budget Increase / (Decrease)	%
611.9000.7500.616	TR TO SANITARY SEWER	288,126.62	0.00	191,854.27	0.00	192,000.00	192,000.00	0.00%
	Total Expense:	**7,424,654.19**	**12,753,333.00**	**3,048,924.98**	**6,886,376.00**	**9,128,351.00**	**2,241,975.00**	**32.56%**
	Total Function: 9000 - 9000:	**-7,424,654.19**	**-12,753,333.00**	**-3,030,344.98**	**-6,867,796.00**	**-9,128,351.00**	**-2,260,555.00**	**32.92%**
	Total Fund: 611 - WPCP REVENUE:	**713,442.34**	**-601,837.00**	**2,729,436.69**	**1,462,107.00**	**-1,035,651.00**	**-2,497,758.00**	**-170.83%**
Fund: 612 - WPCP REVENUE BOND FUND								
Function: 8016 - Sanitary Sewer								
Revenue								
612.8016.4990.000	DEBT ISSUANCE	292,387.86	0.00	0.00	0.00	0.00	0.00	0.00%
	Total Revenue:	**292,387.86**	**0.00**	**0.00**	**0.00**	**0.00**	**0.00**	**0.00%**
Expense								
612.8016.5233.000	ENGINEERING FEES	11,683.60	0.00	0.00	0.00	0.00	0.00	0.00%
612.8016.5234.000	LEGAL EXPENSES	8,000.00	0.00	0.00	0.00	0.00	0.00	0.00%
612.8016.5348.000	CONTRACT-OTHER	352,831.50	0.00	0.00	0.00	0.00	0.00	0.00%
	Total Expense:	**372,515.10**	**0.00**	**0.00**	**0.00**	**0.00**	**0.00**	**0.00%**
	Total Function: 8016 - Sanitary Sewer:	**-80,127.24**	**0.00**	**0.00**	**0.00**	**0.00**	**0.00**	**0.00%**
Function: 9000 - 9000								
Revenue								
612.9000.6500.610	TRANSFER IN - FUND 610	1,820.00	0.00	0.00	0.00	0.00	0.00	0.00%
612.9000.6500.611	TRANSFER IN - WPCP	370,695.10	0.00	0.00	0.00	0.00	0.00	0.00%
	Total Revenue:	**372,515.10**	**0.00**	**0.00**	**0.00**	**0.00**	**0.00**	**0.00%**
Expense								
612.9000.7500.381	TRANSFER OUT - FUND 381	288,550.00	0.00	0.00	0.00	0.00	0.00	0.00%
	Total Expense:	**288,550.00**	**0.00**	**0.00**	**0.00**	**0.00**	**0.00**	**0.00%**
	Total Function: 9000 - 9000:	**83,965.10**	**0.00**	**0.00**	**0.00**	**0.00**	**0.00**	**0.00%**
	Total Fund: 612 - WPCP REVENUE BOND FUND:	**3,837.86**	**0.00**	**0.00**	**0.00**	**0.00**	**0.00**	**0.00%**
Fund: 614 - WPCP CAPITAL IMPROVEMENT RSRV								
Function: 6021 - Finance								
Revenue								
614.6021.4610.000	INTEREST ON INVESTMENTS	10,309.11	25,000.00	11,826.09	25,000.00	25,000.00	0.00	0.00%
	Total Revenue:	**10,309.11**	**25,000.00**	**11,826.09**	**25,000.00**	**25,000.00**	**0.00**	**0.00%**
	Total Function: 6021 - Finance:	**10,309.11**	**25,000.00**	**11,826.09**	**25,000.00**	**25,000.00**	**0.00**	**0.00%**
	Total Fund: 614 - WPCP CAPITAL IMPROVEMENT RSRV:	**10,309.11**	**25,000.00**	**11,826.09**	**25,000.00**	**25,000.00**	**0.00**	**0.00%**

Budget Comparison Report

Account Number		2021-2022 Total Activity	2022-2023 Total Budget	2022-2023 YTD Activity Through Feb	Parent Budget 2022-2023 FY2023 Amend	Comparison 1 Budget 2023-2024 FY2024 Dept Request	Comparison 1 to Parent Budget Increase / (Decrease)	%
Fund: 615 - WPCP PLANT & IMPROVEMENTS								
Function: 8015 - Sewer & Sewage Disposal								
Revenue								
615.8015.4875.000	REFUNDS/REIMB	0.00	0.00	11,063.52	11,064.00	0.00	-11,064.00	-100.00%
615.8015.4990.000	DEBT ISSUANCE	0.00	8,000,000.00	0.00	7,443,455.00	4,795,050.00	-2,648,405.00	-35.58%
	Total Revenue:	**0.00**	**8,000,000.00**	**11,063.52**	**7,454,519.00**	**4,795,050.00**	**-2,659,469.00**	**-35.68%**
Expense								
615.8015.5230.000	CONSULTING & PROF FEES	0.00	0.00	0.00	15,000.00	0.00	-15,000.00	-100.00%
615.8015.5233.000	ENGINEERING FEES	413,132.12	672,500.00	181,753.39	299,983.00	222,500.00	-77,483.00	-25.83%
615.8015.5342.000	CONTRACT-OUTSIDE HELP	0.00	7,733,660.00	318,898.77	2,681,700.00	3,750,600.00	1,068,900.00	39.86%
615.8015.5740.000	COMPUTER EQUIPMENT	0.00	0.00	0.00	0.00	172,500.00	172,500.00	0.00%
615.8015.5741.000	COMPUTER SOFTWARE	0.00	0.00	0.00	0.00	100,000.00	100,000.00	0.00%
	Total Expense:	**413,132.12**	**8,406,160.00**	**500,652.16**	**2,996,683.00**	**4,245,600.00**	**1,248,917.00**	**41.68%**
	Total Function: 8015 - Sewer & Sewage Disposal:	**-413,132.12**	**-406,160.00**	**-489,588.64**	**4,457,836.00**	**549,450.00**	**-3,908,386.00**	**-87.67%**
Function: 9000 - 9000								
Revenue								
615.9000.6500.130	TRANSFER IN - FUIND 130	0.00	0.00	43,016.27	43,017.00	0.00	-43,017.00	-100.00%
615.9000.6500.611	TRANSFER IN - FUND 611	413,132.12	0.00	90,135.15	47,402.00	447,500.00	400,098.00	844.05%
	Total Revenue:	**413,132.12**	**0.00**	**133,151.42**	**90,419.00**	**447,500.00**	**357,081.00**	**394.92%**
Expense								
615.9000.7500.364	TRANSFER OUT - FUN 364	0.00	0.00	0.00	0.00	489,500.00	489,500.00	0.00%
615.9000.7500.616	TRANSFER OUT - FUND 616	0.00	0.00	0.00	4,548,255.00	507,450.00	-4,040,805.00	-88.84%
	Total Expense:	**0.00**	**0.00**	**0.00**	**4,548,255.00**	**996,950.00**	**-3,551,305.00**	**-78.08%**
	Total Function: 9000 - 9000:	**413,132.12**	**0.00**	**133,151.42**	**-4,457,836.00**	**-549,450.00**	**3,908,386.00**	**-87.67%**
	Total Fund: 615 - WPCP PLANT & IMPROVEMENTS:	**0.00**	**-406,160.00**	**-356,437.22**	**0.00**	**0.00**	**0.00**	**0.00%**
Fund: 616 - SANITARY SEWER REHAB PROJECT								
Function: 8016 - Sanitary Sewer								
Expense								
616.8016.5230.000	CONSULTING & PROF FEES	0.00	0.00	0.00	25,000.00	5,000.00	-20,000.00	-80.00%
616.8016.5233.000	ENGINEERING FEES	0.00	0.00	1,132.75	23,255.00	194,450.00	171,195.00	736.16%
616.8016.5348.000	CONTRACT-OTHER	0.00	0.00	190,721.52	4,500,000.00	500,000.00	-4,000,000.00	-88.89%
	Total Expense:	**0.00**	**0.00**	**191,854.27**	**4,548,255.00**	**699,450.00**	**-3,848,805.00**	**-84.62%**
	Total Function: 8016 - Sanitary Sewer:	**0.00**	**0.00**	**191,854.27**	**4,548,255.00**	**699,450.00**	**-3,848,805.00**	**-84.62%**
Function: 9000 - 9000								
Revenue								
616.9000.6500.611	TR FRM WPCP REVENUE	0.00	0.00	191,854.27	0.00	192,000.00	192,000.00	0.00%

Account Number		2021-2022 Total Activity	2022-2023 Total Budget	2022-2023 YTD Activity Through Feb	Parent Budget 2022-2023 FY2023 Amend	Comparison 1 Budget 2023-2024 FY2024 Dept Request	Comparison 1 to Parent Budget Increase / (Decrease)	%
616.9000.6500.615	TRANSFER IN - FUND 615	0.00	0.00	0.00	4,548,255.00	507,450.00	-4,040,805.00	-88.84%
	Total Revenue:	**0.00**	**0.00**	**191,854.27**	**4,548,255.00**	**699,450.00**	**-3,848,805.00**	**-84.62%**
	Total Function: 9000 - 9000:	**0.00**	**0.00**	**191,854.27**	**4,548,255.00**	**699,450.00**	**-3,848,805.00**	**-84.62%**
	Total Fund: 616 - SANITARY SEWER REHAB PROJECT:	**0.00**	**0.00**	**0.00**	**0.00**	**0.00**	**0.00**	**0.00%**
Fund: 617 - SANITARY SEWER NEW CONSTRUCTN								
Function: 8016 - Sanitary Sewer								
Revenue								
617.8016.4279.000	SEWER CONNECTION PERMIT	1,933.00	1,500.00	645.00	1,500.00	1,500.00	0.00	0.00%
617.8016.4442.000	SEWER CONNECTION CHARGE	6,300.00	14,000.00	3,956.36	7,000.00	7,000.00	0.00	0.00%
	Total Revenue:	**8,233.00**	**15,500.00**	**4,601.36**	**8,500.00**	**8,500.00**	**0.00**	**0.00%**
Expense								
617.8016.5980.000	REFUNDS/REIMB	2,900.00	0.00	0.00	0.00	0.00	0.00	0.00%
	Total Expense:	**2,900.00**	**0.00**	**0.00**	**0.00**	**0.00**	**0.00**	**0.00%**
	Total Function: 8016 - Sanitary Sewer:	**5,333.00**	**15,500.00**	**4,601.36**	**8,500.00**	**8,500.00**	**0.00**	**0.00%**
	Total Fund: 617 - SANITARY SEWER NEW CONSTRUCTN:	**5,333.00**	**15,500.00**	**4,601.36**	**8,500.00**	**8,500.00**	**0.00**	**0.00%**
Fund: 618 - TORNADO-WPCP								
Function: 8015 - Sewer & Sewage Disposal								
Revenue								
618.8015.4310.000	FED OPER GRANT	580.97	0.00	0.00	0.00	0.00	0.00	0.00%
	Total Revenue:	**580.97**	**0.00**	**0.00**	**0.00**	**0.00**	**0.00**	**0.00%**
	Total Function: 8015 - Sewer & Sewage Disposal:	**580.97**	**0.00**	**0.00**	**0.00**	**0.00**	**0.00**	**0.00%**
Function: 9000 - 9000								
Revenue								
618.9000.6500.145	TRANSFER IN - TORNADO FUN	0.00	0.00	0.00	0.00	0.00	0.00	0.00%
	Total Revenue:	**0.00**	**0.00**	**0.00**	**0.00**	**0.00**	**0.00**	**0.00%**
	Total Function: 9000 - 9000:	**0.00**	**0.00**	**0.00**	**0.00**	**0.00**	**0.00**	**0.00%**
	Total Fund: 618 - TORNADO-WPCP:	**580.97**	**0.00**	**0.00**	**0.00**	**0.00**	**0.00**	**0.00%**
Fund: 650 - URBAN TREE FUND								
Function: 8040 - URBAN TREES								
Revenue								
650.8040.4448.000	URBAN TREE FEE	0.00	123,444.00	0.00	0.00	0.00	0.00	0.00%
	Total Revenue:	**0.00**	**123,444.00**	**0.00**	**0.00**	**0.00**	**0.00**	**0.00%**
Expense								
650.8040.5010.010	REGULAR-NON UNION	0.00	14,097.00	0.00	0.00	0.00	0.00	0.00%
650.8040.5010.040	REGULAR-PPME UNION	0.00	10,894.00	0.00	0.00	0.00	0.00	0.00%

Account Number		2021-2022 Total Activity	2022-2023 Total Budget	2022-2023 YTD Activity Through Feb	Parent Budget 2022-2023 FY2023 Amend	Comparison 1 Budget 2023-2024 FY2024 Dept Request	Comparison 1 to Parent Budget Increase / (Decrease)	%
650.8040.5030.070	PART-TIME TEMPORARY	0.00	5,000.00	0.00	0.00	0.00	0.00	0.00%
650.8040.5101.010	SOCIAL SECURITY-NON UNION	0.00	874.00	0.00	0.00	0.00	0.00	0.00%
650.8040.5101.040	SOCIAL SECURITY-PPME UNIOI	0.00	676.00	0.00	0.00	0.00	0.00	0.00%
650.8040.5102.010	MEDICARE-NON UNION	0.00	204.00	0.00	0.00	0.00	0.00	0.00%
650.8040.5102.040	MEDICARE-PPME UNION	0.00	159.00	0.00	0.00	0.00	0.00	0.00%
650.8040.5111.010	IPERS-NON UNION	0.00	1,331.00	0.00	0.00	0.00	0.00	0.00%
650.8040.5111.040	IPERS-PPME UNION	0.00	1,028.00	0.00	0.00	0.00	0.00	0.00%
650.8040.5121.010	GRP INSUR-NON UNION	0.00	3,075.00	0.00	0.00	0.00	0.00	0.00%
650.8040.5121.040	GRP INSUR-PPME UNION	0.00	3,077.00	0.00	0.00	0.00	0.00	0.00%
650.8040.5123.010	WORKCOMP-NON UNION	0.00	227.00	0.00	0.00	0.00	0.00	0.00%
650.8040.5123.040	WORKCOMP-PPME UNION	0.00	317.00	0.00	0.00	0.00	0.00	0.00%
650.8040.5342.000	CONTRACT-OUTSIDE HELP	0.00	80,000.00	0.00	0.00	0.00	0.00	0.00%
	Total Expense:	**0.00**	**120,959.00**	**0.00**	**0.00**	**0.00**	**0.00**	**0.00%**
	Total Function: 8040 - URBAN TREES:	**0.00**	**2,485.00**	**0.00**	**0.00**	**0.00**	**0.00**	**0.00%**
	Total Fund: 650 - URBAN TREE FUND:	**0.00**	**2,485.00**	**0.00**	**0.00**	**0.00**	**0.00**	**0.00%**
Fund: 690 - TRANSIT OPERATING								
Function: 6021 - Finance								
Revenue								
690.6021.4610.000	INTEREST ON INVESTMENTS	5,362.00	1,000.00	7,587.77	7,000.00	7,000.00	0.00	0.00%
	Total Revenue:	**5,362.00**	**1,000.00**	**7,587.77**	**7,000.00**	**7,000.00**	**0.00**	**0.00%**
	Total Function: 6021 - Finance:	**5,362.00**	**1,000.00**	**7,587.77**	**7,000.00**	**7,000.00**	**0.00**	**0.00%**
Function: 8050 - Transit								
Revenue								
690.8050.4310.000	BUS-FED SEC 18 OPER ASST	490,734.00	411,603.00	508,866.00	678,338.00	350,163.00	-328,175.00	-48.38%
690.8050.4330.000	STATE OPER GRANT	215,370.95	184,810.00	168,662.62	197,650.00	245,139.00	47,489.00	24.03%
690.8050.4460.000	BUS FARE BOX	30,199.69	25,000.00	20,673.09	30,000.00	30,000.00	0.00	0.00%
690.8050.4462.000	BUS SHELTERED WORK SHOPS	37,452.00	75,000.00	33,996.76	50,000.00	55,000.00	5,000.00	10.00%
690.8050.4464.000	BUS REVENUE PASSES	26,495.00	21,000.00	21,875.00	35,000.00	35,000.00	0.00	0.00%
690.8050.4465.000	BUS REV PASSES-STUDNT	6,560.00	1,500.00	3,480.00	3,140.00	3,000.00	-140.00	-4.46%
690.8050.4466.000	BUS TICKETS	3,040.00	2,500.00	4,165.50	3,080.00	3,000.00	-80.00	-2.60%
690.8050.4467.000	ADVERTISING ON BUSES	19,132.00	4,000.00	1,925.00	3,300.00	3,300.00	0.00	0.00%
690.8050.4616.000	Int Chrgd - Accts Rec	0.00	50.00	2.74	5.00	5.00	0.00	0.00%
690.8050.4875.000	RFNDS/REIMB: TRANSIT	558.67	0.00	1,043.44	1,050.00	0.00	-1,050.00	-100.00%
690.8050.4876.000	MISC REV: TRANSIT	2,400.00	2,400.00	1,600.00	2,400.00	2,400.00	0.00	0.00%
690.8050.4879.000	REBATES	38.91	0.00	26.57	5.00	0.00	-5.00	-100.00%
690.8050.4960.000	SALE OF F.A.-TRANSIT	501.01	0.00	0.00	500.00	0.00	-500.00	-100.00%
	Total Revenue:	**832,482.23**	**727,863.00**	**766,316.72**	**1,004,468.00**	**727,007.00**	**-277,461.00**	**-27.62%**

Budget Comparison Report

Account Number		2021-2022 Total Activity	2022-2023 Total Budget	2022-2023 YTD Activity Through Feb	Parent Budget 2022-2023 FY2023 Amend	Comparison 1 Budget 2023-2024 FY2024 Dept Request	Comparison 1 to Parent Budget Increase / (Decrease)	%
Expense								
690.8050.5010.010	REGULAR-NON UNION	406,095.37	428,143.00	260,437.63	435,889.00	443,838.00	7,949.00	1.82%
690.8050.5020.010	OVERTIME-NON UNION	31,248.39	20,000.00	26,219.86	44,000.00	20,000.00	-24,000.00	-54.55%
690.8050.5050.060	PART-TIME REGULAR	0.00	70,699.00	0.00	10,000.00	64,915.00	54,915.00	549.15%
690.8050.5060.010	TERM PAYOUTS-NON UNION	649.93	0.00	2,745.57	0.00	0.00	0.00	0.00%
690.8050.5061.010	RHSA PAYOUTS-NON UNION	0.00	8,500.00	14,175.00	14,175.00	0.00	-14,175.00	-100.00%
690.8050.5101.010	SOCIAL SECURITY-NON UNION	25,781.98	26,545.00	17,129.20	27,026.00	27,518.00	492.00	1.82%
690.8050.5101.060	SOCIAL SECURITY-PT REGULAR	0.00	4,383.00	0.00	620.00	4,025.00	3,405.00	549.19%
690.8050.5102.010	MEDICARE-NON UNION	6,029.54	6,208.00	4,006.05	6,320.00	6,436.00	116.00	1.84%
690.8050.5102.060	MEDICARE-PT REGULAR	0.00	1,025.00	0.00	145.00	941.00	796.00	548.97%
690.8050.5111.010	IPERS-NON UNION	41,285.38	40,417.00	26,296.83	40,384.00	41,898.00	1,514.00	3.75%
690.8050.5111.060	IPERS-PT REGULAR	0.00	6,674.00	0.00	944.00	6,128.00	5,184.00	549.15%
690.8050.5121.010	GRP INSUR-NON UNION	65,328.87	71,678.00	50,158.41	74,640.00	105,857.00	31,217.00	41.82%
690.8050.5122.000	RETIREES GRP HLTH INS	0.00	0.00	1,589.44	2,981.00	4,474.00	1,493.00	50.08%
690.8050.5123.010	WORKCOMP-NON UNION	8,097.12	15,329.00	10,629.46	15,339.00	15,931.00	592.00	3.86%
690.8050.5123.060	WORKCOMP-PT REGULAR	0.00	2,763.00	0.00	391.00	2,540.00	2,149.00	549.62%
690.8050.5132.000	CLOTHING EXPENSE	1,893.40	3,000.00	2,808.76	3,000.00	3,000.00	0.00	0.00%
690.8050.5151.000	PHYSICALS/IMMUNIZATIONS	0.00	500.00	179.00	500.00	500.00	0.00	0.00%
690.8050.5210.000	ADVERTISING & LEGAL PUB	3,674.30	4,000.00	1,693.80	4,000.00	4,000.00	0.00	0.00%
690.8050.5216.000	BACKGROUND CHECKS	0.00	200.00	15.00	200.00	200.00	0.00	0.00%
690.8050.5230.000	CONSULTING & PROF FEES	0.00	0.00	275.00	275.00	0.00	-275.00	-100.00%
690.8050.5232.000	AUDITING FEES	706.50	786.00	783.00	786.00	815.00	29.00	3.69%
690.8050.5234.000	LEGAL EXPENSES	480.00	0.00	775.50	1,000.00	500.00	-500.00	-50.00%
690.8050.5280.000	DUES, MEMBER, SUBSCRIPTN	2,825.00	3,000.00	3,192.00	3,000.00	3,000.00	0.00	0.00%
690.8050.5290.000	INSURANCE - GENERAL	18,921.75	20,201.00	0.00	22,234.00	26,681.00	4,447.00	20.00%
690.8050.5300.000	INSURANCE - TORT LIAB	3,640.35	4,089.00	0.00	3,921.00	4,705.00	784.00	19.99%
690.8050.5331.000	PAYMENTS-OTHER ENTITIES	19,880.60	35,000.00	37,859.95	50,000.00	100,000.00	50,000.00	100.00%
690.8050.5339.000	MEDICAL CLAIMS PAID BY CITY	601.12	500.00	0.00	500.00	500.00	0.00	0.00%
690.8050.5341.000	FLEXIBLE BENEFIT CLAIMS	583.40	0.00	0.00	0.00	0.00	0.00	0.00%
690.8050.5342.000	CONTRACT-OUTSIDE HELP	3,488.79	3,000.00	2,137.00	3,050.00	3,050.00	0.00	0.00%
690.8050.5344.000	CONTRACT-MAINTENANCE	828.70	500.00	599.66	1,000.00	1,000.00	0.00	0.00%
690.8050.5347.000	CONTRACT-CMPTR TECH SPPR	0.00	0.00	76.75	77.00	0.00	-77.00	-100.00%
690.8050.5359.000	TOWING SERVICES	800.00	500.00	0.00	500.00	500.00	0.00	0.00%
690.8050.5360.000	POSTAGE & SHIPPING	385.28	150.00	703.15	1,400.00	1,100.00	-300.00	-21.43%
690.8050.5370.000	PRINTING & BINDING	1,436.80	2,500.00	1,114.97	2,500.00	2,500.00	0.00	0.00%
690.8050.5380.000	RENTS & LEASES	100.00	0.00	845.00	1,400.00	1,500.00	100.00	7.14%
690.8050.5410.000	REPAIRS & MAINTENANCE	8,596.45	10,000.00	2,710.89	10,000.00	10,000.00	0.00	0.00%
690.8050.5450.000	TELEPHONE/OTHR COMMNCT	767.47	1,000.00	513.81	1,000.00	1,000.00	0.00	0.00%
690.8050.5460.000	CONFERENCE EXPENSE	0.00	1,500.00	0.00	1,500.00	1,500.00	0.00	0.00%

Account Number		2021-2022 Total Activity	2022-2023 Total Budget	2022-2023 YTD Activity Through Feb	Parent Budget 2022-2023 FY2023 Amend	Comparison 1 Budget 2023-2024 FY2024 Dept Request	Comparison 1 to Parent Budget Increase / (Decrease)	%
690.8050.5481.000	ELECTRICITY	7,437.28	8,000.00	5,555.58	9,000.00	9,000.00	0.00	0.00%
690.8050.5482.000	NATURAL GAS	4,898.67	6,500.00	3,655.38	6,500.00	6,500.00	0.00	0.00%
690.8050.5565.000	VEHICLE OPER/MAINT SPPLY	72,488.86	70,000.00	58,999.62	90,000.00	90,000.00	0.00	0.00%
690.8050.5570.000	VEHICLE GAS	7,408.01	7,000.00	5,624.28	9,000.00	9,000.00	0.00	0.00%
690.8050.5571.000	VEHICLE DIESEL FUEL	76,035.17	65,000.00	62,968.74	100,000.00	100,000.00	0.00	0.00%
690.8050.5600.000	OPERATING SUPPLIES	3,576.27	3,000.00	849.91	3,000.00	3,000.00	0.00	0.00%
690.8050.5605.000	OFFICE SUPPLIES	643.34	2,000.00	466.98	1,000.00	1,000.00	0.00	0.00%
690.8050.5611.000	BLDG,GRD OPER/MAINT SPLY	5,703.84	5,000.00	2,945.67	6,000.00	6,000.00	0.00	0.00%
690.8050.5612.000	COMPUTER COMPONENTS	86.97	0.00	0.00	0.00	0.00	0.00	0.00%
690.8050.5703.000	MINOR COMPUTER	1,488.17	1,500.00	0.00	1,500.00	1,500.00	0.00	0.00%
690.8050.5704.000	MINOR SOFTWARE <$5,000	274.40	750.00	0.00	750.00	750.00	0.00	0.00%
690.8050.5718.000	MINOR EQUIP, UNCLASSFIED	4,255.38	4,000.00	1,768.26	4,000.00	4,000.00	0.00	0.00%
690.8050.5750.000	OTHER CAP EQUIP > $5,000	0.00	15,000.00	7,000.00	86,800.00	28,000.00	-58,800.00	-67.74%
690.8050.5776.000	BUILDINGS & IMPROVEMENTS	0.00	0.00	0.00	0.00	25,000.00	25,000.00	0.00%
	Total Expense:	**838,422.85**	**980,540.00**	**619,505.11**	**1,102,247.00**	**1,194,302.00**	**92,055.00**	**8.35%**
	Total Function: 8050 - Transit:	**-5,940.62**	**-252,677.00**	**146,811.61**	**-97,779.00**	**-467,295.00**	**-369,516.00**	**377.91%**
Function: 9000 - 9000								
Revenue								
690.9000.6500.001	TR FRM GENERAL	155,551.67	250,000.00	121,074.97	250,000.00	275,000.00	25,000.00	10.00%
690.9000.6500.121	TRANSFER IN - FUND 121	0.00	0.00	8,090.00	8,090.00	0.00	-8,090.00	-100.00%
	Total Revenue:	**155,551.67**	**250,000.00**	**129,164.97**	**258,090.00**	**275,000.00**	**16,910.00**	**6.55%**
	Total Function: 9000 - 9000:	**155,551.67**	**250,000.00**	**129,164.97**	**258,090.00**	**275,000.00**	**16,910.00**	**6.55%**
	Total Fund: 690 - TRANSIT OPERATING:	**154,973.05**	**-1,677.00**	**283,564.35**	**167,311.00**	**-185,295.00**	**-352,606.00**	**-210.75%**
Fund: 740 - STORM SEWER UTILITY								
Function: 1040 - Flood Control								
Expense								
740.1040.5233.000	ENGINEERING FEES	1,661.00	0.00	0.00	0.00	0.00	0.00	0.00%
	Total Expense:	**1,661.00**	**0.00**	**0.00**	**0.00**	**0.00**	**0.00**	**0.00%**
	Total Function: 1040 - Flood Control:	**1,661.00**	**0.00**	**0.00**	**0.00**	**0.00**	**0.00**	**0.00%**
Function: 6021 - Finance								
Revenue								
740.6021.4610.000	INTEREST ON INVESTMENTS	17,216.59	9,000.00	23,983.59	40,000.00	9,000.00	-31,000.00	-77.50%
	Total Revenue:	**17,216.59**	**9,000.00**	**23,983.59**	**40,000.00**	**9,000.00**	**-31,000.00**	**-77.50%**
	Total Function: 6021 - Finance:	**17,216.59**	**9,000.00**	**23,983.59**	**40,000.00**	**9,000.00**	**-31,000.00**	**-77.50%**

Budget Comparison Report

Account Number		2021-2022 Total Activity	2022-2023 Total Budget	2022-2023 YTD Activity Through Feb	Parent Budget 2022-2023 FY2023 Amend	Comparison 1 Budget 2023-2024 FY2024 Dept Request	Comparison 1 to Parent Budget Increase / (Decrease)	%
Function: 8065 - Storm Water								
Revenue								
740.8065.4230.000	MISC BUSNESS LIC/PRMTS	736.20	1,500.00	1,768.00	2,000.00	1,500.00	-500.00	-25.00%
740.8065.4233.000	CONST SITE EROSN/CON	0.00	1,500.00	0.00	0.00	0.00	0.00	0.00%
740.8065.4310.000	STRM SWR FED GRNT/REIM	824,198.55	0.00	0.00	0.00	0.00	0.00	0.00%
740.8065.4430.000	STORM SEWER CHARGES	1,350,091.66	1,350,000.00	893,396.26	1,350,000.00	1,350,000.00	0.00	0.00%
740.8065.4492.000	STORM SWR MISC CHRGS	1,160.32	0.00	700.00	700.00	0.00	-700.00	-100.00%
740.8065.4875.000	RFNDS/REIMB: STORM SWR	833.57	0.00	7,597.76	7,600.00	0.00	-7,600.00	-100.00%
740.8065.4879.000	REBATES	0.00	0.00	64.61	5.00	0.00	-5.00	-100.00%
740.8065.4960.000	SALE OF F.A.-SEWER	0.00	0.00	6,312.28	6,312.00	0.00	-6,312.00	-100.00%
	Total Revenue:	**2,177,020.30**	**1,353,000.00**	**909,838.91**	**1,366,617.00**	**1,351,500.00**	**-15,117.00**	**-1.11%**
Expense								
740.8065.5010.010	REGULAR-NON UNION	155,637.80	214,626.00	141,993.96	216,637.00	224,681.00	8,044.00	3.71%
740.8065.5010.040	REGULAR-PPME UNION	105,524.38	116,327.00	76,440.18	118,327.00	102,174.00	-16,153.00	-13.65%
740.8065.5020.040	OVERTIME-PPME UNION	426.05	1,200.00	365.87	1,200.00	1,200.00	0.00	0.00%
740.8065.5030.070	PART-TIME TEMPORARY	0.00	8,000.00	0.00	2,000.00	8,000.00	6,000.00	300.00%
740.8065.5057.010	CAR REIMB-NON UNION	390.00	360.00	210.00	360.00	360.00	0.00	0.00%
740.8065.5060.010	TERM PAYOUTS-NON UNION	1,299.35	0.00	0.00	0.00	0.00	0.00	0.00%
740.8065.5060.040	TERM PAYOUTS-PPME UNION	1,186.51	0.00	187.85	0.00	0.00	0.00	0.00%
740.8065.5061.040	RHSA PAYOUT	0.00	0.00	0.00	0.00	0.00	0.00	0.00%
740.8065.5101.010	SOCIAL SECURITY-NON UNION	9,322.17	13,080.00	8,357.79	13,198.00	13,781.00	583.00	4.42%
740.8065.5101.040	SOCIAL SECURITY-PPME UNIO	6,352.98	7,212.00	4,608.89	7,336.00	6,335.00	-1,001.00	-13.65%
740.8065.5101.070	SOCIAL SECURITY-PT TEMP	0.00	496.00	0.00	124.00	496.00	372.00	300.00%
740.8065.5102.010	MEDICARE-NON UNION	2,230.68	3,117.00	2,011.80	3,146.00	3,263.00	117.00	3.72%
740.8065.5102.040	MEDICARE-PPME UNION	1,485.99	1,687.00	1,077.80	1,716.00	1,482.00	-234.00	-13.64%
740.8065.5102.070	MEDICARE-TEMPORARY	0.00	116.00	0.00	29.00	116.00	87.00	300.00%
740.8065.5111.010	IPERS-NON UNION	14,692.87	20,295.00	13,198.91	20,280.00	21,244.00	964.00	4.75%
740.8065.5111.040	IPERS-PPME UNION	10,001.31	10,981.00	6,248.94	10,981.00	9,645.00	-1,336.00	-12.17%
740.8065.5121.010	GRP INSUR-NON UNION	10,766.72	22,477.00	14,720.72	23,632.00	25,208.00	1,576.00	6.67%
740.8065.5121.040	GRP INSUR-PPME UNION	21,311.37	23,662.00	15,392.54	24,877.00	26,381.00	1,504.00	6.05%
740.8065.5122.000	RETIREES GRP HLTH INS	10,255.28	11,762.00	5,365.24	8,349.00	9,596.00	1,247.00	14.94%
740.8065.5123.010	WORKCOMP-NON UNION	2,407.47	4,778.00	3,515.49	4,783.00	5,004.00	221.00	4.62%
740.8065.5123.040	WORKCOMP-PPME UNION	2,333.77	2,439.00	2,730.10	2,442.00	2,145.00	-297.00	-12.16%
740.8065.5123.070	WORKCOMP-TEMPORARY	0.00	168.00	0.00	42.00	168.00	126.00	300.00%
740.8065.5132.000	CLOTHING EXPENSE	740.18	1,700.00	260.87	1,700.00	1,700.00	0.00	0.00%
740.8065.5151.000	PHYSICALS/IMMUNIZATIONS	155.60	250.00	167.18	250.00	250.00	0.00	0.00%
740.8065.5192.070	UNEMPLOYMENT-TEMPORAR	0.00	0.00	1,090.88	0.00	0.00	0.00	0.00%
740.8065.5210.000	ADVERTISING & LEGAL PUB	21.08	0.00	10.00	10.00	0.00	-10.00	-100.00%
740.8065.5215.000	BANK CHARGES	0.00	110.00	0.00	0.00	0.00	0.00	0.00%

Budget Comparison Report

Account Number		2021-2022 Total Activity	2022-2023 Total Budget	2022-2023 YTD Activity Through Feb	Parent Budget 2022-2023 FY2023 Amend	Comparison 1 Budget 2023-2024 FY2024 Dept Request	Comparison 1 to Parent Budget Increase / (Decrease)	%
740.8065.5216.000	BACKGROUND CHECKS	16.00	0.00	0.00	0.00	0.00	0.00	0.00%
740.8065.5220.000	COLLECTION COSTS/REFUNDS	5,956.15	5,500.00	3,008.05	5,500.00	5,500.00	0.00	0.00%
740.8065.5230.000	CONSULTING & PROF FEES	1,536.48	2,000.00	887.20	10,000.00	10,000.00	0.00	0.00%
740.8065.5231.000	ACCOUNTING FEES	10,500.00	18,256.00	12,170.64	18,256.00	19,100.00	844.00	4.62%
740.8065.5232.000	AUDITING FEES	3,297.00	3,668.00	3,654.00	3,654.00	3,801.00	147.00	4.02%
740.8065.5233.000	ENGINEERING FEES	44,881.34	50,000.00	2,001.15	2,100.00	55,000.00	52,900.00	2,519.05%
740.8065.5251.000	LICENSE & PERMITS	57.00	0.00	26.20	53.00	53.00	0.00	0.00%
740.8065.5280.000	DUES, MEMBER, SUBSCRIPTN	8,910.00	4,400.00	48.00	4,600.00	4,600.00	0.00	0.00%
740.8065.5290.000	INSURANCE - GENERAL	4,447.22	4,981.00	0.00	6,373.00	7,648.00	1,275.00	20.01%
740.8065.5300.000	INSURANCE - TORT LIAB	5,059.66	4,990.00	0.00	11,739.00	14,087.00	2,348.00	20.00%
740.8065.5331.000	PAYMENTS-OTHER ENTITIES	0.00	0.00	0.00	142,850.00	0.00	-142,850.00	-100.00%
740.8065.5339.000	MEDICAL CLAIMS PAID BY CITY	46.36	500.00	109.54	500.00	500.00	0.00	0.00%
740.8065.5342.000	CONTRACT-OUTSIDE HELP	1,194,846.50	142,000.00	12,105.90	142,000.00	92,000.00	-50,000.00	-35.21%
740.8065.5344.000	CONTRACT-MAINTENANCE	226.60	600.00	246.39	600.00	600.00	0.00	0.00%
740.8065.5347.000	CONTRACT-SOFTWARE MAINT	6,781.40	7,000.00	8,331.58	9,500.00	9,500.00	0.00	0.00%
740.8065.5360.000	POSTAGE & SHIPPING	55.00	0.00	0.00	0.00	0.00	0.00	0.00%
740.8065.5387.000	REPAIRS & MAINT LIFT	3,758.40	39,000.00	2,713.82	39,000.00	65,000.00	26,000.00	66.67%
740.8065.5410.000	REPAIRS & MAINTENANCE	1,896.81	2,000.00	94.24	2,000.00	2,000.00	0.00	0.00%
740.8065.5450.000	TELEPHONE/OTHR COMMNCT	3,325.91	3,500.00	2,358.00	3,500.00	3,500.00	0.00	0.00%
740.8065.5460.000	CONFERENCE EXPENSE	280.00	3,000.00	0.00	3,000.00	3,000.00	0.00	0.00%
740.8065.5481.000	ELECTRICITY	7,629.00	15,000.00	6,642.02	15,000.00	15,000.00	0.00	0.00%
740.8065.5565.000	VEHICLE OPER/MAINT SPPLY	3,476.47	6,000.00	1,640.55	6,000.00	6,000.00	0.00	0.00%
740.8065.5570.000	VEHICLE GAS	2,899.60	3,500.00	2,148.00	3,800.00	3,800.00	0.00	0.00%
740.8065.5571.000	VEHICLE DIESEL FUEL	843.72	2,500.00	1,766.82	3,500.00	3,500.00	0.00	0.00%
740.8065.5600.000	OPERATING SUPPLIES	19,226.07	20,000.00	11,189.50	20,000.00	20,000.00	0.00	0.00%
740.8065.5605.000	OFFICE SUPPLIES	112.36	100.00	0.00	100.00	100.00	0.00	0.00%
740.8065.5612.000	COMPUTER COMPONENTS	0.00	250.00	26.00	250.00	250.00	0.00	0.00%
740.8065.5614.000	LIFT STATION OPERATING SUP	2,761.05	3,000.00	373.23	3,000.00	3,000.00	0.00	0.00%
740.8065.5702.000	MINOR OFFICE FURN/EQUIP	0.00	500.00	0.00	500.00	500.00	0.00	0.00%
740.8065.5703.000	MINOR COMPUTER	0.00	1,000.00	0.00	2,600.00	3,000.00	400.00	15.38%
740.8065.5704.000	MINOR SOFTWARE <$5,000	0.00	600.00	0.00	600.00	600.00	0.00	0.00%
740.8065.5718.000	MINOR EQUIP, UNCLASSFIED	1,361.28	2,000.00	107.60	2,000.00	2,000.00	0.00	0.00%
740.8065.5719.000	MINOR EQUIP. LIFT STATIONS	0.00	1,800.00	0.00	1,800.00	1,800.00	0.00	0.00%
740.8065.5750.000	OTHER CAP EQUIP > $5,000	16,349.30	228,000.00	223,405.94	237,407.00	20,000.00	-217,407.00	-91.58%
740.8065.5765.000	LIFT STATIONS	0.00	70,000.00	0.00	0.00	116,000.00	116,000.00	0.00%
740.8065.5776.000	BUILDINGS & IMPROVEMENTS	0.00	0.00	305.83	2,000.00	2,000.00	0.00	0.00%
740.8065.5980.000	REFUNDS/REIMB	0.00	500.00	235.40	500.00	500.00	0.00	0.00%
	Total Expense:	**1,707,078.24**	**1,110,988.00**	**593,550.61**	**1,165,701.00**	**957,168.00**	**-208,533.00**	**-17.89%**
	Total Function: 8065 - Storm Water:	**469,942.06**	**242,012.00**	**316,288.30**	**200,916.00**	**394,332.00**	**193,416.00**	**96.27%**

Budget Comparison Report

Account Number		2021-2022 Total Activity	2022-2023 Total Budget	2022-2023 YTD Activity Through Feb	Parent Budget 2022-2023 FY2023 Amend	Comparison 1 Budget 2023-2024 FY2024 Dept Request	Comparison 1 to Parent Budget Increase / (Decrease)	%
Function: 8067 - Storm Water-Dike								
Expense								
740.8067.5010.090	REGULAR-P&R UNION	0.00	0.00	0.00	0.00	0.00	0.00	0.00%
740.8067.5030.070	PART-TIME TEMPORARY	0.00	6,000.00	0.00	2,000.00	6,000.00	4,000.00	200.00%
740.8067.5101.070	SOCIAL SECURITY-PT TEMP	0.00	372.00	0.00	124.00	372.00	248.00	200.00%
740.8067.5101.090	SOCIAL SECURITY-P&R UNION	0.00	0.00	0.00	0.00	0.00	0.00	0.00%
740.8067.5102.070	MEDICARE-TEMPORARY	0.00	87.00	0.00	29.00	87.00	58.00	200.00%
740.8067.5102.090	MEDICARE-P&R UNION	0.00	0.00	0.00	0.00	0.00	0.00	0.00%
740.8067.5111.090	IPERS-P&R UNION	0.00	0.00	0.00	0.00	0.00	0.00	0.00%
740.8067.5121.090	GRP INSUR-P&R UNION	0.00	0.00	0.00	0.00	0.00	0.00	0.00%
740.8067.5123.070	WORKCOMP-TEMPORARY	0.00	126.00	0.00	42.00	126.00	84.00	200.00%
740.8067.5123.090	WORKCOMP-P&R UNION	0.00	0.00	0.00	0.00	0.00	0.00	0.00%
740.8067.5300.000	INSURANCE - TORT LIAB	113.41	110.00	0.00	918.00	1,102.00	184.00	20.04%
740.8067.5342.000	CONTRACT-OUTSIDE HELP	229,998.50	8,000.00	14,467.96	14,468.00	0.00	-14,468.00	-100.00%
740.8067.5386.000	CONTRACT LAWN CARE	2,510.00	2,500.00	2,300.00	3,000.00	3,000.00	0.00	0.00%
740.8067.5410.000	REPAIRS & MAINTENANCE	0.00	1,500.00	0.00	1,500.00	1,500.00	0.00	0.00%
740.8067.5562.000	GROUNDS EQUIP MAINT SPLY	0.00	2,750.00	0.00	2,750.00	2,750.00	0.00	0.00%
740.8067.5570.000	VEHICLE GAS	0.00	750.00	0.00	750.00	750.00	0.00	0.00%
740.8067.5571.000	VEHICLE DIESEL FUEL	701.10	1,500.00	982.34	1,500.00	1,500.00	0.00	0.00%
740.8067.5600.000	OPERATING SUPPLIES	0.00	1,500.00	262.67	1,500.00	1,500.00	0.00	0.00%
	Total Expense:	**233,323.01**	**25,195.00**	**18,012.97**	**28,581.00**	**18,687.00**	**-9,894.00**	**-34.62%**
	Total Function: 8067 - Storm Water-Dike:	**233,323.01**	**25,195.00**	**18,012.97**	**28,581.00**	**18,687.00**	**-9,894.00**	**-34.62%**
Function: 8068 - Storm Water-Permit								
Revenue								
740.8068.4230.000	MISC BUSNESS LIC/PRMTS	0.00	0.00	124.00	124.00	0.00	-124.00	-100.00%
	Total Revenue:	**0.00**	**0.00**	**124.00**	**124.00**	**0.00**	**-124.00**	**-100.00%**
	Total Function: 8068 - Storm Water-Permit:	**0.00**	**0.00**	**124.00**	**124.00**	**0.00**	**-124.00**	**-100.00%**
Function: 9000 - 9000								
Revenue								
740.9000.6500.121	TRANSFER IN - FUND 121	0.00	0.00	4,170.00	4,170.00	0.00	-4,170.00	-100.00%
740.9000.6500.381	TRANSFER IN - FUND 381	33,732.65	0.00	0.00	0.00	0.00	0.00	0.00%
	Total Revenue:	**33,732.65**	**0.00**	**4,170.00**	**4,170.00**	**0.00**	**-4,170.00**	**-100.00%**
Expense								
740.9000.7500.132	TRANSFER OUT - FUND 132 GF	54,617.00	0.00	0.00	0.00	0.00	0.00	0.00%
740.9000.7500.200	TRANSFER OUT - DEBT SERVIC	549,056.00	527,606.00	0.00	527,606.00	541,506.00	13,900.00	2.63%
740.9000.7500.363	TRANSFER OUT - FUND 363	0.00	77,326.00	0.00	0.00	0.00	0.00	0.00%
740.9000.7500.381	TRANSFER OUT - FUND 381	0.00	0.00	0.00	0.00	0.00	0.00	0.00%

Account Number		2021-2022 Total Activity	2022-2023 Total Budget	2022-2023 YTD Activity Through Feb	Parent Budget 2022-2023 FY2023 Amend	Comparison 1 Budget 2023-2024 FY2024 Dept Request	Comparison 1 to Parent Budget Increase / (Decrease)	%
740.9000.7500.395	TRANSFER OUT - FUND 395	0.00	236,405.00	0.00	236,405.00	0.00	-236,405.00	-100.00%
	Total Expense:	**603,673.00**	**841,337.00**	**0.00**	**764,011.00**	**541,506.00**	**-222,505.00**	**-29.12%**
	Total Function: 9000 - 9000:	**-569,940.35**	**-841,337.00**	**4,170.00**	**-759,841.00**	**-541,506.00**	**218,335.00**	**-28.73%**
	Total Fund: 740 - STORM SEWER UTILITY:	**-317,765.71**	**-615,520.00**	**326,552.92**	**-547,382.00**	**-156,861.00**	**390,521.00**	**-71.34%**
Fund: 741 - 2016 GO STORM WATER PROJ								
Function: 6021 - Finance								
Revenue								
741.6021.4610.000	INTEREST ON INVESTMENT	15,734.77	2,000.00	10,166.52	12,000.00	2,000.00	-10,000.00	-83.33%
	Total Revenue:	**15,734.77**	**2,000.00**	**10,166.52**	**12,000.00**	**2,000.00**	**-10,000.00**	**-83.33%**
	Total Function: 6021 - Finance:	**15,734.77**	**2,000.00**	**10,166.52**	**12,000.00**	**2,000.00**	**-10,000.00**	**-83.33%**
Function: 8065 - Storm Water								
Expense								
741.8065.5251.000	LICENSE & PERMITS	180.00	0.00	0.00	0.00	0.00	0.00	0.00%
741.8065.5342.000	CONTRACT-OUTSIDE HELP	1,684,931.21	0.00	753,578.95	995,108.00	0.00	-995,108.00	-100.00%
	Total Expense:	**1,685,111.21**	**0.00**	**753,578.95**	**995,108.00**	**0.00**	**-995,108.00**	**-100.00%**
	Total Function: 8065 - Storm Water:	**1,685,111.21**	**0.00**	**753,578.95**	**995,108.00**	**0.00**	**-995,108.00**	**-100.00%**
Function: 9000 - 9000								
Expense								
741.9000.7500.200	TRANSFER OUT - DEBT SERVIC	0.00	0.00	0.00	0.00	0.00	0.00	0.00%
	Total Expense:	**0.00**	**0.00**	**0.00**	**0.00**	**0.00**	**0.00**	**0.00%**
	Total Function: 9000 - 9000:	**0.00**	**0.00**	**0.00**	**0.00**	**0.00**	**0.00**	**0.00%**
	Total Fund: 741 - 2016 GO STORM WATER PROJ:	**-1,669,376.44**	**2,000.00**	**-743,412.43**	**-983,108.00**	**2,000.00**	**985,108.00**	**-100.20%**
Fund: 742 - TORNADO - STORM/SEWER								
Function: 8065 - Storm Water								
Revenue								
742.8065.4310.000	FEMA - FEDERAL GRANT REIM	898.25	0.00	0.00	0.00	0.00	0.00	0.00%
	Total Revenue:	**898.25**	**0.00**	**0.00**	**0.00**	**0.00**	**0.00**	**0.00%**
	Total Function: 8065 - Storm Water:	**898.25**	**0.00**	**0.00**	**0.00**	**0.00**	**0.00**	**0.00%**
Function: 9000 - 9000								
Revenue								
742.9000.6500.145	TRANSFER IN - TORNADO FUN	0.00	0.00	0.00	0.00	0.00	0.00	0.00%
	Total Revenue:	**0.00**	**0.00**	**0.00**	**0.00**	**0.00**	**0.00**	**0.00%**
	Total Function: 9000 - 9000:	**0.00**	**0.00**	**0.00**	**0.00**	**0.00**	**0.00**	**0.00%**
	Total Fund: 742 - TORNADO - STORM/SEWER:	**898.25**	**0.00**	**0.00**	**0.00**	**0.00**	**0.00**	**0.00%**

Budget Comparison Report

Account Number		2021-2022 Total Activity	2022-2023 Total Budget	2022-2023 YTD Activity Through Feb	Parent Budget 2022-2023 FY2023 Amend	Comparison 1 Budget 2023-2024 FY2024 Dept Request	Comparison 1 to Parent Budget Increase / (Decrease)	%
Fund: 750 - COMPOSTING FACILITY								
Function: 6021 - Finance								
Revenue								
750.6021.4610.000	INTEREST ON INVESTMENTS	1,147.32	800.00	1,761.06	1,600.00	800.00	-800.00	-50.00%
	Total Revenue:	**1,147.32**	**800.00**	**1,761.06**	**1,600.00**	**800.00**	**-800.00**	**-50.00%**
	Total Function: 6021 - Finance:	**1,147.32**	**800.00**	**1,761.06**	**1,600.00**	**800.00**	**-800.00**	**-50.00%**
Function: 8070 - Compost								
Revenue								
750.8070.4230.000	MISC BUSNESS LIC/PRMTS	15.00	500.00	0.00	500.00	500.00	0.00	0.00%
750.8070.4310.000	FED OPER GRANT	756.56	0.00	0.00	0.00	0.00	0.00	0.00%
750.8070.4481.000	GATE FEE: TREE DISPOSAL	87,931.00	50,000.00	49,717.72	65,000.00	65,000.00	0.00	0.00%
750.8070.4485.000	SALE OF FIREWOOD	0.00	500.00	0.00	0.00	0.00	0.00	0.00%
750.8070.4486.000	SALE OF COMPOST	9,895.00	4,000.00	1,646.00	4,000.00	4,000.00	0.00	0.00%
750.8070.4487.000	SALE OF CHIPS/MULCH	3,327.00	3,500.00	1,317.00	1,017.00	0.00	-1,017.00	-100.00%
750.8070.4492.000	STREET MISC CHRGS	3,510.00	1,000.00	520.00	1,000.00	1,000.00	0.00	0.00%
750.8070.4616.000	INT CHRGD - ACCTS REC	154.76	0.00	34.11	11.00	0.00	-11.00	-100.00%
750.8070.4875.000	RFNDS/REIMB: COMPOST	63.70	0.00	44.81	50.00	0.00	-50.00	-100.00%
	Total Revenue:	**105,653.02**	**59,500.00**	**53,279.64**	**71,578.00**	**70,500.00**	**-1,078.00**	**-1.51%**
Expense								
750.8070.5010.040	REGULAR-PPME UNION	7,826.54	10,000.00	4,256.04	10,000.00	10,000.00	0.00	0.00%
750.8070.5030.070	PART-TIME TEMPORARY	21,401.38	18,462.00	13,737.00	16,817.00	9,460.00	-7,357.00	-43.75%
750.8070.5101.040	SOCIAL SECURITY-PPME UNIOI	461.13	620.00	247.07	620.00	620.00	0.00	0.00%
750.8070.5101.070	SOCIAL SECURITY-PT TEMP	1,326.89	1,145.00	851.70	1,043.00	587.00	-456.00	-43.72%
750.8070.5102.040	MEDICARE-PPME UNION	107.86	145.00	57.80	145.00	145.00	0.00	0.00%
750.8070.5102.070	MEDICARE-TEMPORARY	310.37	268.00	199.23	244.00	137.00	-107.00	-43.85%
750.8070.5111.040	IPERS-PPME UNION	738.83	944.00	401.77	944.00	944.00	0.00	0.00%
750.8070.5121.040	GRP INSUR-PPME UNION	1,270.57	2,712.00	826.23	2,852.00	3,407.00	555.00	19.46%
750.8070.5123.040	WORKCOMP-PPME UNION	255.96	588.00	250.34	588.00	588.00	0.00	0.00%
750.8070.5123.070	WORKCOMP-TEMPORARY	235.87	362.00	269.33	330.00	185.00	-145.00	-43.94%
750.8070.5192.070	UNEMPLOYMENT-POLICE UNI(	1,202.30	0.00	0.00	0.00	0.00	0.00	0.00%
750.8070.5210.000	ADVERTISING & LEGAL PUB	0.00	250.00	84.08	250.00	250.00	0.00	0.00%
750.8070.5216.000	BACKGROUND CHECKS	90.00	75.00	45.00	75.00	75.00	0.00	0.00%
750.8070.5290.000	INSURANCE - GENERAL	23.95	26.00	0.00	32.00	38.00	6.00	18.75%
750.8070.5300.000	INSURANCE - TORT LIAB	225.38	501.00	0.00	363.00	436.00	73.00	20.11%
750.8070.5342.000	CONTRACT-OUTSIDE HELP	25,250.00	30,000.00	350.00	60,000.00	60,000.00	0.00	0.00%
750.8070.5344.000	CONTRACT-MAINTENANCE	434.00	0.00	384.00	600.00	600.00	0.00	0.00%
750.8070.5347.000	CONTRACT-SOFTWARE MAINT	0.00	0.00	0.00	0.00	0.00	0.00	0.00%
750.8070.5360.000	POSTAGE & SHIPPING	24.92	0.00	0.00	0.00	0.00	0.00	0.00%

Account Number		2021-2022 Total Activity	2022-2023 Total Budget	2022-2023 YTD Activity Through Feb	Parent Budget 2022-2023 FY2023 Amend	Comparison 1 Budget 2023-2024 FY2024 Dept Request	Comparison 1 to Parent Budget Increase / (Decrease)	%
750.8070.5410.000	REPAIRS & MAINTENANCE	152.25	200.00	465.70	271.00	200.00	-71.00	-26.20%
750.8070.5450.000	TELEPHONE/OTHR COMMNCT	455.18	450.00	257.12	450.00	450.00	0.00	0.00%
750.8070.5481.000	ELECTRICITY	1,237.18	800.00	897.56	1,400.00	1,400.00	0.00	0.00%
750.8070.5565.000	VEHICLE OPER/MAINT SPPLY	113.48	0.00	0.00	0.00	0.00	0.00	0.00%
750.8070.5600.000	OPERATING SUPPLIES	720.00	250.00	53.56	250.00	250.00	0.00	0.00%
750.8070.5605.000	OFFICE SUPPLIES	104.56	1,000.00	0.00	300.00	300.00	0.00	0.00%
750.8070.5611.000	BLD.GRD, OPER SUPPLIES	0.00	0.00	63.38	65.00	0.00	-65.00	-100.00%
750.8070.5702.000	MINOR OFFICE FURN/EQUIP	79.99	0.00	0.00	0.00	0.00	0.00	0.00%
750.8070.5718.000	MINOR EQUIPMENT	3,664.50	0.00	0.00	0.00	0.00	0.00	0.00%
750.8070.5750.000	OTHER CAP EQUIP > $5,000	0.00	0.00	0.00	90,000.00	0.00	-90,000.00	-100.00%
750.8070.5980.000	REFUNDS/REIMB	75.00	0.00	-18.29	18.00	0.00	-18.00	-100.00%
750.8070.5990.000	CASH SHORT & (OVER)	-48.31	0.00	-128.00	0.00	0.00	0.00	0.00%
	Total Expense:	**67,739.78**	**68,798.00**	**23,550.62**	**187,657.00**	**90,072.00**	**-97,585.00**	**-52.00%**
	Total Function: 8070 - Compost:	**37,913.24**	**-9,298.00**	**29,729.02**	**-116,079.00**	**-19,572.00**	**96,507.00**	**-83.14%**
	Total Fund: 750 - COMPOSTING FACILITY:	**39,060.56**	**-8,498.00**	**31,490.08**	**-114,479.00**	**-18,772.00**	**95,707.00**	**-83.60%**
Fund: 760 - P&R CONCESSIONS ENTERPRISE								
Function: 8080 - P&R Concessions								
Revenue								
760.8080.4483.000	CONCESSIONS	41,743.02	41,000.00	13,273.66	46,000.00	48,000.00	2,000.00	4.35%
760.8080.4875.000	RFNDS/REIMB	47.94	0.00	21.70	0.00	0.00	0.00	0.00%
	Total Revenue:	**41,790.96**	**41,000.00**	**13,295.36**	**46,000.00**	**48,000.00**	**2,000.00**	**4.35%**
Expense								
760.8080.5030.070	PART-TIME TEMPORARY	15,071.31	20,000.00	8,589.60	15,000.00	15,000.00	0.00	0.00%
760.8080.5101.070	SOCIAL SECURITY-PT TEMP	934.28	1,240.00	532.49	930.00	930.00	0.00	0.00%
760.8080.5102.070	MEDICARE-TEMPORARY	218.35	290.00	124.46	218.00	218.00	0.00	0.00%
760.8080.5111.070	IPERS-PT TEMP	591.62	0.00	0.00	0.00	0.00	0.00	0.00%
760.8080.5123.070	WORKCOMP-TEMPORARY	238.21	396.00	212.59	371.00	371.00	0.00	0.00%
760.8080.5216.000	BACKGROUND CHECKS	0.00	250.00	0.00	250.00	250.00	0.00	0.00%
760.8080.5251.000	LICENSE & PERMITS	150.00	115.00	0.00	115.00	115.00	0.00	0.00%
760.8080.5280.000	DUES, MEMBER, SUBSCRIPTN	100.00	45.00	60.00	45.00	45.00	0.00	0.00%
760.8080.5290.000	INSURANCE - GENERAL	248.87	276.00	0.00	330.00	396.00	66.00	20.00%
760.8080.5300.000	INSURANCE - TORT LIAB	224.21	291.00	0.00	259.00	311.00	52.00	20.08%
760.8080.5342.000	CONTRACT-OUTSIDE HELP	0.00	200.00	0.00	200.00	200.00	0.00	0.00%
760.8080.5360.000	POSTAGE & SHIPPING	0.00	25.00	0.00	25.00	25.00	0.00	0.00%
760.8080.5370.000	PRINTING & BINDING	0.00	30.00	0.00	30.00	30.00	0.00	0.00%
760.8080.5410.000	REPAIRS & MAINTENANCE	0.00	800.00	0.00	800.00	800.00	0.00	0.00%
760.8080.5600.000	OPERATING SUPPLIES	278.06	500.00	761.12	500.00	500.00	0.00	0.00%
760.8080.5605.000	OFFICE SUPPLIES	0.00	100.00	0.00	100.00	100.00	0.00	0.00%

Budget Comparison Report

Account Number		2021-2022 Total Activity	2022-2023 Total Budget	2022-2023 YTD Activity Through Feb	Parent Budget 2022-2023 FY2023 Amend	Comparison 1 Budget 2023-2024 FY2024 Dept Request	Comparison 1 to Parent Budget Increase / (Decrease)	%
760.8080.5608.000	RESALE SUPPLIES	23,995.85	20,000.00	18,997.60	22,000.00	20,000.00	-2,000.00	-9.09%
760.8080.5613.000	MERCHANDISE FOR RESALE	0.00	0.00	16.83	0.00	0.00	0.00	0.00%
760.8080.5718.000	MINOR EQUIP, UNCLASSFIED	958.99	1,000.00	0.00	1,000.00	1,000.00	0.00	0.00%
760.8080.5990.000	CASH SHORT & (OVER)	40.36	0.00	0.09	0.00	0.00	0.00	0.00%
	Total Expense:	**43,050.11**	**45,558.00**	**29,294.78**	**42,173.00**	**40,291.00**	**-1,882.00**	**-4.46%**
	Total Function: 8080 - P&R Concessions:	**-1,259.15**	**-4,558.00**	**-15,999.42**	**3,827.00**	**7,709.00**	**3,882.00**	**101.44%**
Function: 9000 - 9000								
Revenue								
760.9000.6500.140	TRANSFER IN - FUND 140 P&R	0.00	0.00	0.00	20,000.00	0.00	-20,000.00	-100.00%
	Total Revenue:	**0.00**	**0.00**	**0.00**	**20,000.00**	**0.00**	**-20,000.00**	**-100.00%**
	Total Function: 9000 - 9000:	**0.00**	**0.00**	**0.00**	**20,000.00**	**0.00**	**-20,000.00**	**-100.00%**
	Total Fund: 760 - P&R CONCESSIONS ENTERPRISE:	**-1,259.15**	**-4,558.00**	**-15,999.42**	**23,827.00**	**7,709.00**	**-16,118.00**	**-67.65%**
	Report Total:	**6,079,008.43**	**-10,650,535.24**	**13,397,989.16**	**2,380,507.00**	**-15,602,574.00**	**-17,983,081.00**	**-755.43%**

Group Summary

Account Type	2021-2022 Total Activity	2022-2023 Total Budget	2022-2023 YTD Activity Through Feb	Parent Budget 2022-2023 FY2023 Amend	Comparison 1 Budget 2023-2024 FY2024 Dept Request	Comparison 1 to Parent Budget Increase / (Decrease)	%
Fund: 001 - GENERAL FUND							
Function: 1010 - Police Operations/Crime Prevention							
Revenue	104,623.04	93,022.00	84,704.01	99,172.00	93,022.00	-6,150.00	-6.20%
Expense	5,172,914.38	5,399,236.00	3,347,022.92	5,301,314.00	5,471,911.00	170,597.00	3.22%
Total Function: 1010 - Police Operations/Crime Prevention:	**-5,068,291.34**	**-5,306,214.00**	**-3,262,318.91**	**-5,202,142.00**	**-5,378,889.00**	**-176,747.00**	**3.40%**
Function: 1011 - Automated Traffic Enforcement							
Revenue	0.00	0.00	0.00	0.00	10,000.00	10,000.00	0.00%
Expense	0.00	0.00	0.00	0.00	3,500.00	3,500.00	0.00%
Total Function: 1011 - Automated Traffic Enforcement:	**0.00**	**0.00**	**0.00**	**0.00**	**6,500.00**	**6,500.00**	**0.00%**
Function: 1030 - Emergency Mgmt							
Revenue	102.90	0.00	0.00	0.00	0.00	0.00	0.00%
Expense	34,443.65	36,170.00	35,452.78	36,496.00	38,211.00	1,715.00	4.70%
Total Function: 1030 - Emergency Mgmt:	**-34,340.75**	**-36,170.00**	**-35,452.78**	**-36,496.00**	**-38,211.00**	**-1,715.00**	**4.70%**
Function: 1040 - Flood Control							
Expense	58.65	493.00	48.00	55.00	56.00	1.00	1.82%
Total Function: 1040 - Flood Control:	**58.65**	**493.00**	**48.00**	**55.00**	**56.00**	**1.00**	**1.82%**
Function: 1050 - Fire Department							
Revenue	98,369.81	90,858.00	110,439.22	102,376.00	107,358.00	4,982.00	4.87%
Expense	3,389,580.80	3,453,751.00	2,269,355.99	3,513,147.00	3,625,661.00	112,514.00	3.20%
Total Function: 1050 - Fire Department:	**-3,291,210.99**	**-3,362,893.00**	**-2,158,916.77**	**-3,410,771.00**	**-3,518,303.00**	**-107,532.00**	**3.15%**
Function: 1070 - Building Inspections							
Revenue	148,224.04	202,600.00	141,566.47	245,100.00	285,200.00	40,100.00	16.36%
Expense	202,698.58	222,252.00	152,278.96	253,819.00	266,986.00	13,167.00	5.19%
Total Function: 1070 - Building Inspections:	**-54,474.54**	**-19,652.00**	**-10,712.49**	**-8,719.00**	**18,214.00**	**26,933.00**	**-308.90%**
Function: 1071 - Rental Inspections							
Revenue	114,746.55	164,200.00	9,421.06	77,200.00	205,065.00	127,865.00	165.63%
Expense	158,249.90	187,538.00	110,097.53	191,307.00	226,007.00	34,700.00	18.14%
Total Function: 1071 - Rental Inspections:	**-43,503.35**	**-23,338.00**	**-100,676.47**	**-114,107.00**	**-20,942.00**	**93,165.00**	**-81.65%**
Function: 1072 - Electrial Inspections							
Revenue	13,050.40	13,000.00	3,279.79	1,780.00	1,000.00	-780.00	-43.82%
Expense	80,774.67	86,072.00	40,557.21	36,698.00	1,730.00	-34,968.00	-95.29%
Total Function: 1072 - Electrial Inspections:	**-67,724.27**	**-73,072.00**	**-37,277.42**	**-34,918.00**	**-730.00**	**34,188.00**	**-97.91%**
Function: 1075 - Code Enforcement							
Revenue	23,216.90	30,000.00	14,272.56	25,000.00	25,000.00	0.00	0.00%
Expense	125,022.49	147,369.00	82,785.06	153,508.00	152,596.00	-912.00	-0.59%

Budget Comparison Report

Account Type	2021-2022 Total Activity	2022-2023 Total Budget	2022-2023 YTD Activity Through Feb	Parent Budget 2022-2023 FY2023 Amend	Comparison 1 Budget 2023-2024 FY2024 Dept Request	Comparison 1 to Parent Budget Increase / (Decrease)	%
Total Function: 1075 - Code Enforcement:	**-101,805.59**	**-117,369.00**	**-68,512.50**	**-128,508.00**	**-127,596.00**	**912.00**	**-0.71%**
Function: 1090 - Animal Control							
Expense	52,000.00	52,000.00	60,000.03	80,000.00	83,200.00	3,200.00	4.00%
Total Function: 1090 - Animal Control:	**52,000.00**	**52,000.00**	**60,000.03**	**80,000.00**	**83,200.00**	**3,200.00**	**4.00%**
Function: 1099 - Police and Fire Building Exps							
Revenue	4,565.81	4,212.00	0.00	7,345.00	10,545.00	3,200.00	43.57%
Expense	200,369.90	181,280.98	133,796.96	254,517.00	252,144.00	-2,373.00	-0.93%
Total Function: 1099 - Police and Fire Building Exps:	**-195,804.09**	**-177,068.98**	**-133,796.96**	**-247,172.00**	**-241,599.00**	**5,573.00**	**-2.25%**
Function: 2010 - Roads, Bridges, Sidewalks							
Revenue	6,142.01	46,157.00	49,041.62	52,578.00	48,476.00	-4,102.00	-7.80%
Expense	925,296.86	1,154,459.00	634,676.48	1,186,655.00	1,208,702.00	22,047.00	1.86%
Total Function: 2010 - Roads, Bridges, Sidewalks:	**-919,154.85**	**-1,108,302.00**	**-585,634.86**	**-1,134,077.00**	**-1,160,226.00**	**-26,149.00**	**2.31%**
Function: 2011 - Sidewalks							
Revenue	7,427.67	7,000.00	3,696.92	5,804.00	5,500.00	-304.00	-5.24%
Expense	0.00	0.00	147.18	150.00	0.00	-150.00	-100.00%
Total Function: 2011 - Sidewalks:	**7,427.67**	**7,000.00**	**3,549.74**	**5,654.00**	**5,500.00**	**-154.00**	**-2.72%**
Function: 2020 - Parking							
Revenue	49,957.11	76,200.00	35,053.84	76,550.00	76,800.00	250.00	0.33%
Expense	36,314.31	74,491.00	44,208.36	70,128.00	69,291.00	-837.00	-1.19%
Total Function: 2020 - Parking:	**13,642.80**	**1,709.00**	**-9,154.52**	**6,422.00**	**7,509.00**	**1,087.00**	**16.93%**
Function: 2030 - Street Lighting							
Revenue	-253.21	0.00	253.21	253.00	0.00	-253.00	-100.00%
Expense	27,796.18	30,231.00	15,167.11	43,579.00	75,959.00	32,380.00	74.30%
Total Function: 2030 - Street Lighting:	**-28,049.39**	**-30,231.00**	**-14,913.90**	**-43,326.00**	**-75,959.00**	**-32,633.00**	**75.32%**
Function: 2040 - Traffic Safety							
Revenue	-1,519.26	0.00	1,519.26	1,519.00	0.00	-1,519.00	-100.00%
Expense	162,054.95	176,520.00	59,142.72	109,701.00	85,321.00	-24,380.00	-22.22%
Total Function: 2040 - Traffic Safety:	**-163,574.21**	**-176,520.00**	**-57,623.46**	**-108,182.00**	**-85,321.00**	**22,861.00**	**-21.13%**
Function: 2050 - Snow Removal							
Expense	73,832.35	44,934.00	105,782.45	44,794.00	45,025.00	231.00	0.52%
Total Function: 2050 - Snow Removal:	**73,832.35**	**44,934.00**	**105,782.45**	**44,794.00**	**45,025.00**	**231.00**	**0.52%**
Function: 2055 - Tree Removal							
Expense	3,728.37	0.00	2,631.04	0.00	0.00	0.00	0.00%
Total Function: 2055 - Tree Removal:	**3,728.37**	**0.00**	**2,631.04**	**0.00**	**0.00**	**0.00**	**0.00%**
Function: 2060 - Highway Engineering							
Revenue	1,041.00	800.00	1,740.00	1,400.00	800.00	-600.00	-42.86%

Account Type	2021-2022 Total Activity	2022-2023 Total Budget	2022-2023 YTD Activity Through Feb	Parent Budget 2022-2023 FY2023 Amend	Comparison 1 Budget 2023-2024 FY2024 Dept Request	Comparison 1 to Parent Budget Increase / (Decrease)	%
Expense	447,811.95	404,678.00	215,364.48	369,317.00	440,062.00	70,745.00	19.16%
Total Function: 2060 - Highway Engineering:	**-446,770.95**	**-403,878.00**	**-213,624.48**	**-367,917.00**	**-439,262.00**	**-71,345.00**	**19.39%**
Function: 2080 - Airport							
Revenue	101,373.46	54,700.00	31,749.02	61,112.00	58,442.00	-2,670.00	-4.37%
Expense	90,370.37	116,229.00	71,699.99	134,034.00	139,811.00	5,777.00	4.31%
Total Function: 2080 - Airport:	**11,003.09**	**-61,529.00**	**-39,950.97**	**-72,922.00**	**-81,369.00**	**-8,447.00**	**11.58%**
Function: 2090 - Garbage							
Revenue	147,760.31	150,000.00	98,917.61	150,000.00	150,000.00	0.00	0.00%
Expense	113,434.20	113,708.00	56,993.85	113,708.00	113,708.00	0.00	0.00%
Total Function: 2090 - Garbage:	**34,326.11**	**36,292.00**	**41,923.76**	**36,292.00**	**36,292.00**	**0.00**	**0.00%**
Function: 2095 - Mosquito/Pest Control							
Revenue	0.00	0.00	536.12	536.00	0.00	-536.00	-100.00%
Expense	0.00	4,000.00	0.00	4,000.00	4,000.00	0.00	0.00%
Total Function: 2095 - Mosquito/Pest Control:	**0.00**	**-4,000.00**	**536.12**	**-3,464.00**	**-4,000.00**	**-536.00**	**15.47%**
Function: 2900 - Other Public Works							
Revenue	1,514.45	1,614.00	312.52	383.00	314.00	-69.00	-18.02%
Total Function: 2900 - Other Public Works:	**1,514.45**	**1,614.00**	**312.52**	**383.00**	**314.00**	**-69.00**	**-18.02%**
Function: 4010 - Library Services							
Revenue	318,532.89	323,666.00	207,711.24	328,302.00	332,492.00	4,190.00	1.28%
Expense	1,260,336.22	1,399,053.00	803,341.75	1,437,167.00	1,452,640.00	15,473.00	1.08%
Total Function: 4010 - Library Services:	**-941,803.33**	**-1,075,387.00**	**-595,630.51**	**-1,108,865.00**	**-1,120,148.00**	**-11,283.00**	**1.02%**
Function: 4020 - Museum, Band, Theater							
Expense	11,263.76	11,000.00	6,093.96	11,000.00	9,000.00	-2,000.00	-18.18%
Total Function: 4020 - Museum, Band, Theater:	**11,263.76**	**11,000.00**	**6,093.96**	**11,000.00**	**9,000.00**	**-2,000.00**	**-18.18%**
Function: 4030 - Parks							
Revenue	69,825.52	61,700.00	51,689.93	69,200.00	69,200.00	0.00	0.00%
Expense	644,649.70	656,657.00	422,454.52	714,921.00	747,784.00	32,863.00	4.60%
Total Function: 4030 - Parks:	**-574,824.18**	**-594,957.00**	**-370,764.59**	**-645,721.00**	**-678,584.00**	**-32,863.00**	**5.09%**
Function: 4040 - Recreation							
Revenue	19,361.53	13,250.00	14,430.93	18,250.00	21,250.00	3,000.00	16.44%
Expense	159,962.84	173,484.00	111,132.07	179,399.00	186,637.00	7,238.00	4.03%
Total Function: 4040 - Recreation:	**-140,601.31**	**-160,234.00**	**-96,701.14**	**-161,149.00**	**-165,387.00**	**-4,238.00**	**2.63%**
Function: 4041 - Youth Recreation & Camps							
Revenue	182,460.18	214,500.00	121,204.81	222,500.00	245,000.00	22,500.00	10.11%
Expense	222,265.53	254,484.00	180,046.66	247,234.00	245,521.00	-1,713.00	-0.69%
Total Function: 4041 - Youth Recreation & Camps:	**-39,805.35**	**-39,984.00**	**-58,841.85**	**-24,734.00**	**-521.00**	**24,213.00**	**-97.89%**

Budget Comparison Report

Account Type	2021-2022 Total Activity	2022-2023 Total Budget	2022-2023 YTD Activity Through Feb	Parent Budget 2022-2023 FY2023 Amend	Comparison 1 Budget 2023-2024 FY2024 Dept Request	Comparison 1 to Parent Budget Increase / (Decrease)	%
Function: 4045 - Swimming Pools							
Revenue	93,371.91	141,100.00	31,884.17	136,100.00	136,100.00	0.00	0.00%
Expense	176,802.72	280,277.25	95,079.61	234,516.00	237,441.00	2,925.00	1.25%
Total Function: 4045 - Swimming Pools:	**-83,430.81**	**-139,177.25**	**-63,195.44**	**-98,416.00**	**-101,341.00**	**-2,925.00**	**2.97%**
Function: 4060 - Community Center							
Expense	100,000.00	100,000.00	74,999.97	100,000.00	100,000.00	0.00	0.00%
Total Function: 4060 - Community Center:	**100,000.00**	**100,000.00**	**74,999.97**	**100,000.00**	**100,000.00**	**0.00**	**0.00%**
Function: 4065 - Coliseum							
Revenue	19,661.67	20,200.00	17,006.02	21,000.00	20,200.00	-800.00	-3.81%
Expense	98,686.16	96,282.00	65,987.38	113,548.00	128,777.00	15,229.00	13.41%
Total Function: 4065 - Coliseum:	**-79,024.49**	**-76,082.00**	**-48,981.36**	**-92,548.00**	**-108,577.00**	**-16,029.00**	**17.32%**
Function: 4066 - Coliseum Concessions							
Revenue	12,600.25	14,000.00	17,943.15	16,000.00	16,000.00	0.00	0.00%
Expense	15,045.85	14,786.00	11,450.71	14,808.00	14,938.00	130.00	0.88%
Total Function: 4066 - Coliseum Concessions:	**-2,445.60**	**-786.00**	**6,492.44**	**1,192.00**	**1,062.00**	**-130.00**	**-10.91%**
Function: 5010 - Community Beautification							
Expense	8,979.48	22,593.00	9,460.70	20,999.00	23,989.00	2,990.00	14.24%
Total Function: 5010 - Community Beautification:	**8,979.48**	**22,593.00**	**9,460.70**	**20,999.00**	**23,989.00**	**2,990.00**	**14.24%**
Function: 5020 - Economic Development							
Expense	145,778.12	141,741.00	101,744.04	326,281.00	102,202.00	-224,079.00	-68.68%
Total Function: 5020 - Economic Development:	**145,778.12**	**141,741.00**	**101,744.04**	**326,281.00**	**102,202.00**	**-224,079.00**	**-68.68%**
Function: 5040 - Planning & Zoning							
Revenue	6,919.99	6,000.00	4,333.30	6,000.00	6,000.00	0.00	0.00%
Expense	196,435.15	215,262.00	132,799.69	228,487.00	179,744.00	-48,743.00	-21.33%
Total Function: 5040 - Planning & Zoning:	**-189,515.16**	**-209,262.00**	**-128,466.39**	**-222,487.00**	**-173,744.00**	**48,743.00**	**-21.91%**
Function: 5900 - Other Community and Economic Dev.							
Revenue	1,800.00	2,000.00	76,115.00	76,615.00	2,000.00	-74,615.00	-97.39%
Expense	400,093.71	268,800.00	209,160.92	337,665.00	336,000.00	-1,665.00	-0.49%
Total Function: 5900 - Other Community and Economic Dev.:	**-398,293.71**	**-266,800.00**	**-133,045.92**	**-261,050.00**	**-334,000.00**	**-72,950.00**	**27.94%**
Function: 6010 - Mayor							
Expense	10,923.66	14,552.00	8,304.51	14,004.00	14,508.00	504.00	3.60%
Total Function: 6010 - Mayor:	**10,923.66**	**14,552.00**	**8,304.51**	**14,004.00**	**14,508.00**	**504.00**	**3.60%**
Function: 6011 - Council							
Expense	35,384.08	47,434.00	30,205.78	47,231.00	48,115.00	884.00	1.87%
Total Function: 6011 - Council:	**35,384.08**	**47,434.00**	**30,205.78**	**47,231.00**	**48,115.00**	**884.00**	**1.87%**

Budget Comparison Report

Account Type	2021-2022 Total Activity	2022-2023 Total Budget	2022-2023 YTD Activity Through Feb	Parent Budget 2022-2023 FY2023 Amend	Comparison 1 Budget 2023-2024 FY2024 Dept Request	Comparison 1 to Parent Budget Increase / (Decrease)	%
Function: 6012 - City Administrator/Manager							
Revenue	0.00	1.00	910.00	910.00	0.00	-910.00	-100.00%
Expense	169,200.50	177,150.00	112,994.14	173,446.00	178,354.00	4,908.00	2.83%
Total Function: 6012 - City Administrator/Manager:	**-169,200.50**	**-177,149.00**	**-112,084.14**	**-172,536.00**	**-178,354.00**	**-5,818.00**	**3.37%**
Function: 6020 - Clerk							
Revenue	70,816.65	45,200.00	26,315.82	47,400.00	46,900.00	-500.00	-1.05%
Expense	124,559.23	144,868.00	100,187.14	150,320.00	147,926.00	-2,394.00	-1.59%
Total Function: 6020 - Clerk:	**-53,742.58**	**-99,668.00**	**-73,871.32**	**-102,920.00**	**-101,026.00**	**1,894.00**	**-1.84%**
Function: 6021 - Finance							
Revenue	9,011,799.92	9,350,161.00	5,540,987.97	9,483,969.00	9,821,433.00	337,464.00	3.56%
Expense	567,047.92	613,726.00	440,349.95	634,858.00	642,232.00	7,374.00	1.16%
Total Function: 6021 - Finance:	**8,444,752.00**	**8,736,435.00**	**5,100,638.02**	**8,849,111.00**	**9,179,201.00**	**330,090.00**	**3.73%**
Function: 6025 - HR							
Revenue	15,220.00	15,000.00	7,500.00	15,000.00	25,000.00	10,000.00	66.67%
Expense	118,970.10	126,991.00	82,403.84	128,550.00	131,771.00	3,221.00	2.51%
Total Function: 6025 - HR:	**-103,750.10**	**-111,991.00**	**-74,903.84**	**-113,550.00**	**-106,771.00**	**6,779.00**	**-5.97%**
Function: 6030 - Elections							
Expense	3,806.70	0.00	0.00	0.00	4,000.00	4,000.00	0.00%
Total Function: 6030 - Elections:	**3,806.70**	**0.00**	**0.00**	**0.00**	**4,000.00**	**4,000.00**	**0.00%**
Function: 6040 - Legal Services							
Revenue	0.00	0.00	292.00	292.00	0.00	-292.00	-100.00%
Expense	88,161.96	61,623.00	49,704.66	69,668.00	82,180.00	12,512.00	17.96%
Total Function: 6040 - Legal Services:	**-88,161.96**	**-61,623.00**	**-49,412.66**	**-69,376.00**	**-82,180.00**	**-12,804.00**	**18.46%**
Function: 6050 - City Hall & Gen Buildings							
Revenue	1,959.33	3,700.00	1,852.66	1,900.00	3,700.00	1,800.00	94.74%
Expense	39,693.27	81,902.00	66,303.45	158,451.00	237,655.00	79,204.00	49.99%
Total Function: 6050 - City Hall & Gen Buildings:	**-37,733.94**	**-78,202.00**	**-64,450.79**	**-156,551.00**	**-233,955.00**	**-77,404.00**	**49.44%**
Function: 6051 - Carnegie Bldg							
Revenue	20.66	0.00	0.00	0.00	0.00	0.00	0.00%
Expense	34,473.61	28,439.00	21,970.15	40,343.00	41,723.00	1,380.00	3.42%
Total Function: 6051 - Carnegie Bldg:	**-34,452.95**	**-28,439.00**	**-21,970.15**	**-40,343.00**	**-41,723.00**	**-1,380.00**	**3.42%**
Function: 6070 - Data Processing,IT							
Revenue	0.00	0.00	31.45	0.00	0.00	0.00	0.00%
Expense	62,740.74	63,455.00	55,272.98	87,592.00	75,980.00	-11,612.00	-13.26%
Total Function: 6070 - Data Processing,IT:	**-62,740.74**	**-63,455.00**	**-55,241.53**	**-87,592.00**	**-75,980.00**	**11,612.00**	**-13.26%**

Account Type	2021-2022 Total Activity	2022-2023 Total Budget	2022-2023 YTD Activity Through Feb	Parent Budget 2022-2023 FY2023 Amend	Comparison 1 Budget 2023-2024 FY2024 Dept Request	Comparison 1 to Parent Budget Increase / (Decrease)	%
Function: 6075 - Cable TV							
Expense	293.02	0.00	0.00	0.00	0.00	0.00	0.00%
Total Function: 6075 - Cable TV:	**293.02**	**0.00**	**0.00**	**0.00**	**0.00**	**0.00**	**0.00%**
Function: 6900 - Other Gen Gov							
Revenue	2,850.10	1,500.00	4,246.64	1,500.00	1,500.00	0.00	0.00%
Expense	7,534.89	75,766.00	3,234.66	17,873.00	52,485.00	34,612.00	193.66%
Total Function: 6900 - Other Gen Gov:	**-4,684.79**	**-74,266.00**	**1,011.98**	**-16,373.00**	**-50,985.00**	**-34,612.00**	**211.40%**
Function: 8016 - Sanitary Sewer							
Revenue	14.38	0.00	0.94	0.00	0.00	0.00	0.00%
Total Function: 8016 - Sanitary Sewer:	**14.38**	**0.00**	**0.94**	**0.00**	**0.00**	**0.00**	**0.00%**
Function: 9000 - 9000							
Revenue	5,539,031.22	6,079,396.00	2,830,025.99	6,254,841.00	6,196,186.00	-58,655.00	-0.94%
Expense	186,747.71	270,000.00	123,306.33	272,232.00	295,000.00	22,768.00	8.36%
Total Function: 9000 - 9000:	**5,352,283.51**	**5,809,396.00**	**2,706,719.66**	**5,982,609.00**	**5,901,186.00**	**-81,423.00**	**-1.36%**
Total Fund: 001 - GENERAL FUND:	**0.00**	**-0.23**	**-1,214,213.42**	**-49,633.00**	**0.00**	**49,633.00**	**-100.00%**
Fund: 010 - CASH FLOW RESERVE FUND							
Function: 6021 - Finance							
Revenue	22,088.96	23,000.00	31,058.68	55,000.00	60,000.00	5,000.00	9.09%
Total Function: 6021 - Finance:	**22,088.96**	**23,000.00**	**31,058.68**	**55,000.00**	**60,000.00**	**5,000.00**	**9.09%**
Function: 9000 - 9000							
Revenue	99,023.00	91,512.00	0.00	91,512.00	288,000.00	196,488.00	214.71%
Total Function: 9000 - 9000:	**99,023.00**	**91,512.00**	**0.00**	**91,512.00**	**288,000.00**	**196,488.00**	**214.71%**
Total Fund: 010 - CASH FLOW RESERVE FUND:	**121,111.96**	**114,512.00**	**31,058.68**	**146,512.00**	**348,000.00**	**201,488.00**	**137.52%**
Fund: 030 - CAPITAL RESERVE							
Function: 1010 - Police Operations/Crime Prevention							
Revenue	760.00	0.00	606.00	606.00	0.00	-606.00	-100.00%
Expense	136,282.07	162,400.00	86,184.22	222,400.00	239,000.00	16,600.00	7.46%
Total Function: 1010 - Police Operations/Crime Prevention:	**-135,522.07**	**-162,400.00**	**-85,578.22**	**-221,794.00**	**-239,000.00**	**-17,206.00**	**7.76%**
Function: 1050 - Fire Department							
Expense	28,339.99	35,600.00	29,454.91	38,843.00	41,388.00	2,545.00	6.55%
Total Function: 1050 - Fire Department:	**28,339.99**	**35,600.00**	**29,454.91**	**38,843.00**	**41,388.00**	**2,545.00**	**6.55%**
Function: 1070 - Building Inspections							
Expense	0.00	2,500.00	2,500.00	2,500.00	0.00	-2,500.00	-100.00%
Total Function: 1070 - Building Inspections:	**0.00**	**2,500.00**	**2,500.00**	**2,500.00**	**0.00**	**-2,500.00**	**-100.00%**

Budget Comparison Report

Account Type	2021-2022 Total Activity	2022-2023 Total Budget	2022-2023 YTD Activity Through Feb	Parent Budget 2022-2023 FY2023 Amend	Comparison 1 Budget 2023-2024 FY2024 Dept Request	Comparison 1 to Parent Budget Increase / (Decrease)	%
Function: 1071 - Rental Inspections							
Expense	0.00	2,500.00	2,500.00	2,500.00	0.00	-2,500.00	-100.00%
Total Function: 1071 - Rental Inspections:	**0.00**	**2,500.00**	**2,500.00**	**2,500.00**	**0.00**	**-2,500.00**	**-100.00%**
Function: 2080 - Airport							
Expense	0.00	0.00	0.00	10,000.00	50,000.00	40,000.00	400.00%
Total Function: 2080 - Airport:	**0.00**	**0.00**	**0.00**	**10,000.00**	**50,000.00**	**40,000.00**	**400.00%**
Function: 4010 - Library Services							
Expense	122,064.24	80,599.00	19,461.92	80,951.00	20,435.00	-60,516.00	-74.76%
Total Function: 4010 - Library Services:	**122,064.24**	**80,599.00**	**19,461.92**	**80,951.00**	**20,435.00**	**-60,516.00**	**-74.76%**
Function: 4030 - Parks							
Revenue	0.00	0.00	6,000.00	6,000.00	0.00	-6,000.00	-100.00%
Expense	94,546.03	327,000.00	271,455.19	443,127.00	210,000.00	-233,127.00	-52.61%
Total Function: 4030 - Parks:	**-94,546.03**	**-327,000.00**	**-265,455.19**	**-437,127.00**	**-210,000.00**	**227,127.00**	**-51.96%**
Function: 4045 - Swimming Pools							
Expense	4,954.27	20,000.00	4,056.12	20,000.00	20,000.00	0.00	0.00%
Total Function: 4045 - Swimming Pools:	**4,954.27**	**20,000.00**	**4,056.12**	**20,000.00**	**20,000.00**	**0.00**	**0.00%**
Function: 5900 - Other Community and Economic Dev.							
Expense	222.49	0.00	0.00	0.00	0.00	0.00	0.00%
Total Function: 5900 - Other Community and Economic Dev.:	**222.49**	**0.00**	**0.00**	**0.00**	**0.00**	**0.00**	**0.00%**
Function: 6020 - Clerk							
Expense	0.00	5,500.00	5,474.00	5,474.00	0.00	-5,474.00	-100.00%
Total Function: 6020 - Clerk:	**0.00**	**5,500.00**	**5,474.00**	**5,474.00**	**0.00**	**-5,474.00**	**-100.00%**
Function: 6021 - Finance							
Revenue	0.00	0.00	13.09	0.00	0.00	0.00	0.00%
Total Function: 6021 - Finance:	**0.00**	**0.00**	**13.09**	**0.00**	**0.00**	**0.00**	**0.00%**
Function: 6070 - Data Processing,IT							
Expense	52,010.77	50,500.00	7,365.15	71,500.00	57,500.00	-14,000.00	-19.58%
Total Function: 6070 - Data Processing,IT:	**52,010.77**	**50,500.00**	**7,365.15**	**71,500.00**	**57,500.00**	**-14,000.00**	**-19.58%**
Function: 6900 - Other Gen Gov							
Revenue	61.18	0.00	0.00	0.00	0.00	0.00	0.00%
Total Function: 6900 - Other Gen Gov:	**61.18**	**0.00**	**0.00**	**0.00**	**0.00**	**0.00**	**0.00%**
Function: 9000 - 9000							
Revenue	437,598.68	796,599.00	319,252.34	890,689.00	696,423.00	-194,266.00	-21.81%
Expense	0.00	110,000.00	0.00	0.00	58,100.00	58,100.00	0.00%

Account Type	2021-2022 Total Activity	2022-2023 Total Budget	2022-2023 YTD Activity Through Feb	Parent Budget 2022-2023 FY2023 Amend	Comparison 1 Budget 2023-2024 FY2024 Dept Request	Comparison 1 to Parent Budget Increase / (Decrease)	%
Total Function: 9000 - 9000:	**437,598.68**	**686,599.00**	**319,252.34**	**890,689.00**	**638,323.00**	**-252,366.00**	**-28.33%**
Total Fund: 030 - CAPITAL RESERVE:	**0.00**	**0.00**	**-102,580.08**	**0.00**	**0.00**	**0.00**	**0.00%**
Fund: 031 - CAPITAL RSRV-BLDG MAINT							
Function: 1099 - Police and Fire Building Exps							
Expense	0.00	0.00	0.00	0.00	43,000.00	43,000.00	0.00%
Total Function: 1099 - Police and Fire Building Exps:	**0.00**	**0.00**	**0.00**	**0.00**	**43,000.00**	**43,000.00**	**0.00%**
Function: 4010 - Library Services							
Expense	0.00	0.00	0.00	0.00	45,000.00	45,000.00	0.00%
Total Function: 4010 - Library Services:	**0.00**	**0.00**	**0.00**	**0.00**	**45,000.00**	**45,000.00**	**0.00%**
Function: 4065 - Coliseum							
Expense	0.00	0.00	4,950.00	7,242.00	0.00	-7,242.00	-100.00%
Total Function: 4065 - Coliseum:	**0.00**	**0.00**	**4,950.00**	**7,242.00**	**0.00**	**-7,242.00**	**-100.00%**
Function: 6021 - Finance							
Revenue	2,941.22	1,500.00	2,669.69	5,000.00	3,000.00	-2,000.00	-40.00%
Total Function: 6021 - Finance:	**2,941.22**	**1,500.00**	**2,669.69**	**5,000.00**	**3,000.00**	**-2,000.00**	**-40.00%**
Function: 6050 - City Hall & Gen Buildings							
Expense	79,831.65	12,500.00	12,255.36	12,616.00	0.00	-12,616.00	-100.00%
Total Function: 6050 - City Hall & Gen Buildings:	**79,831.65**	**12,500.00**	**12,255.36**	**12,616.00**	**0.00**	**-12,616.00**	**-100.00%**
Function: 6051 - Carnegie Bldg							
Expense	4,544.16	12,500.00	0.00	0.00	15,000.00	15,000.00	0.00%
Total Function: 6051 - Carnegie Bldg:	**4,544.16**	**12,500.00**	**0.00**	**0.00**	**15,000.00**	**15,000.00**	**0.00%**
Function: 6900 - Other Gen Gov							
Revenue	14.33	0.00	0.00	0.00	0.00	0.00	0.00%
Total Function: 6900 - Other Gen Gov:	**14.33**	**0.00**	**0.00**	**0.00**	**0.00**	**0.00**	**0.00%**
Function: 9000 - 9000							
Expense	0.00	33,750.00	0.00	0.00	38,275.00	38,275.00	0.00%
Total Function: 9000 - 9000:	**0.00**	**33,750.00**	**0.00**	**0.00**	**38,275.00**	**38,275.00**	**0.00%**
Total Fund: 031 - CAPITAL RSRV-BLDG MAINT:	**-81,420.26**	**-57,250.00**	**-14,535.67**	**-14,858.00**	**-138,275.00**	**-123,417.00**	**830.64%**
Fund: 032 - CIP LARGE VEHICLE/EQUIPMENT							
Function: 1050 - Fire Department							
Revenue	62,008.85	0.00	0.00	0.00	0.00	0.00	0.00%
Expense	7,117.22	0.00	0.00	0.00	0.00	0.00	0.00%
Total Function: 1050 - Fire Department:	**54,891.63**	**0.00**	**0.00**	**0.00**	**0.00**	**0.00**	**0.00%**
Function: 9000 - 9000							
Revenue	55,485.52	0.00	0.00	93,755.00	94,086.00	331.00	0.35%

Budget Comparison Report

Account Type	2021-2022 Total Activity	2022-2023 Total Budget	2022-2023 YTD Activity Through Feb	Parent Budget 2022-2023 FY2023 Amend	Comparison 1 Budget 2023-2024 FY2024 Dept Request	Comparison 1 to Parent Budget Increase / (Decrease)	%
Total Function: 9000 - 9000:	**55,485.52**	**0.00**	**0.00**	**93,755.00**	**94,086.00**	**331.00**	**0.35%**
Total Fund: 032 - CIP LARGE VEHICLE/EQUIPMENT:	**110,377.15**	**0.00**	**0.00**	**93,755.00**	**94,086.00**	**331.00**	**0.35%**
Fund: 110 - ROAD USE TAX							
Function: 2010 - Roads, Bridges, Sidewalks							
Revenue	3,813,836.90	3,490,000.00	2,570,780.84	3,525,100.00	3,490,300.00	-34,800.00	-0.99%
Expense	1,224,075.74	1,504,104.00	1,108,743.22	1,675,822.00	1,197,933.00	-477,889.00	-28.52%
Total Function: 2010 - Roads, Bridges, Sidewalks:	**2,589,761.16**	**1,985,896.00**	**1,462,037.62**	**1,849,278.00**	**2,292,367.00**	**443,089.00**	**23.96%**
Function: 2011 - Sidewalks							
Expense	78,636.21	0.00	10,712.22	10,712.00	0.00	-10,712.00	-100.00%
Total Function: 2011 - Sidewalks:	**78,636.21**	**0.00**	**10,712.22**	**10,712.00**	**0.00**	**-10,712.00**	**-100.00%**
Function: 2012 - Street Construction							
Expense	75,094.32	812,020.00	0.00	240,650.00	383,500.00	142,850.00	59.36%
Total Function: 2012 - Street Construction:	**75,094.32**	**812,020.00**	**0.00**	**240,650.00**	**383,500.00**	**142,850.00**	**59.36%**
Function: 2030 - Street Lighting							
Revenue	515.23	0.00	182.30	250.00	0.00	-250.00	-100.00%
Expense	247,144.94	235,000.00	167,575.18	254,542.00	265,800.00	11,258.00	4.42%
Total Function: 2030 - Street Lighting:	**-246,629.71**	**-235,000.00**	**-167,392.88**	**-254,292.00**	**-265,800.00**	**-11,508.00**	**4.53%**
Function: 2040 - Traffic Safety							
Revenue	519.90	0.00	4,104.27	56.00	0.00	-56.00	-100.00%
Expense	56,334.12	88,760.00	27,563.42	79,618.00	105,435.00	25,817.00	32.43%
Total Function: 2040 - Traffic Safety:	**-55,814.22**	**-88,760.00**	**-23,459.15**	**-79,562.00**	**-105,435.00**	**-25,873.00**	**32.52%**
Function: 2050 - Snow Removal							
Revenue	861.90	0.00	0.00	0.00	0.00	0.00	0.00%
Expense	203,453.75	220,500.00	200,238.57	226,465.00	273,500.00	47,035.00	20.77%
Total Function: 2050 - Snow Removal:	**-202,591.85**	**-220,500.00**	**-200,238.57**	**-226,465.00**	**-273,500.00**	**-47,035.00**	**20.77%**
Function: 2060 - Highway Engineering							
Revenue	0.00	0.00	18,071.45	18,071.00	0.00	-18,071.00	-100.00%
Expense	101,115.79	141,400.00	41,104.84	131,189.00	136,300.00	5,111.00	3.90%
Total Function: 2060 - Highway Engineering:	**-101,115.79**	**-141,400.00**	**-23,033.39**	**-113,118.00**	**-136,300.00**	**-23,182.00**	**20.49%**
Function: 2070 - Street Cleaning							
Expense	11,551.89	12,000.00	9,510.32	16,672.00	16,500.00	-172.00	-1.03%
Total Function: 2070 - Street Cleaning:	**11,551.89**	**12,000.00**	**9,510.32**	**16,672.00**	**16,500.00**	**-172.00**	**-1.03%**
Function: 6021 - Finance							
Revenue	0.00	0.00	72,130.54	100,000.00	90,000.00	-10,000.00	-10.00%
Total Function: 6021 - Finance:	**0.00**	**0.00**	**72,130.54**	**100,000.00**	**90,000.00**	**-10,000.00**	**-10.00%**

Budget Comparison Report

Account Type	2021-2022 Total Activity	2022-2023 Total Budget	2022-2023 YTD Activity Through Feb	Parent Budget 2022-2023 FY2023 Amend	Comparison 1 Budget 2023-2024 FY2024 Dept Request	Comparison 1 to Parent Budget Increase / (Decrease)	%
Function: 9000 - 9000							
Revenue	0.00	0.00	246,516.60	600,284.00	149,100.00	-451,184.00	-75.16%
Expense	1,116,774.01	2,014,987.00	577,154.24	1,416,441.00	1,819,166.00	402,725.00	28.43%
Total Function: 9000 - 9000:	**-1,116,774.01**	**-2,014,987.00**	**-330,637.64**	**-816,157.00**	**-1,670,066.00**	**-853,909.00**	**104.63%**
Total Fund: 110 - ROAD USE TAX:	**701,553.16**	**-1,538,771.00**	**769,183.99**	**191,650.00**	**-468,734.00**	**-660,384.00**	**-344.58%**
Fund: 112 - EMPLOYEE BENEFITS FUND							
Function: 6021 - Finance							
Revenue	2,850,034.37	3,001,623.00	1,695,818.83	3,001,623.00	2,330,221.00	-671,402.00	-22.37%
Total Function: 6021 - Finance:	**2,850,034.37**	**3,001,623.00**	**1,695,818.83**	**3,001,623.00**	**2,330,221.00**	**-671,402.00**	**-22.37%**
Function: 9000 - 9000							
Expense	2,608,912.25	2,935,235.00	1,323,503.77	2,898,190.00	3,070,871.00	172,681.00	5.96%
Total Function: 9000 - 9000:	**2,608,912.25**	**2,935,235.00**	**1,323,503.77**	**2,898,190.00**	**3,070,871.00**	**172,681.00**	**5.96%**
Total Fund: 112 - EMPLOYEE BENEFITS FUND:	**241,122.12**	**66,388.00**	**372,315.06**	**103,433.00**	**-740,650.00**	**-844,083.00**	**-816.07%**
Fund: 117 - POLICE/FIRE RETIREMENT							
Function: 1010 - Police Operations/Crime Prevention							
Expense	7,012.88	10,900.00	0.00	0.00	0.00	0.00	0.00%
Total Function: 1010 - Police Operations/Crime Prevention:	**7,012.88**	**10,900.00**	**0.00**	**0.00**	**0.00**	**0.00**	**0.00%**
Function: 6021 - Finance							
Revenue	1,284,876.34	1,234,945.00	700,777.13	1,234,945.00	993,788.00	-241,157.00	-19.53%
Total Function: 6021 - Finance:	**1,284,876.34**	**1,234,945.00**	**700,777.13**	**1,234,945.00**	**993,788.00**	**-241,157.00**	**-19.53%**
Function: 9000 - 9000							
Expense	1,237,682.69	1,200,148.00	560,984.78	1,151,802.00	1,180,148.00	28,346.00	2.46%
Total Function: 9000 - 9000:	**1,237,682.69**	**1,200,148.00**	**560,984.78**	**1,151,802.00**	**1,180,148.00**	**28,346.00**	**2.46%**
Total Fund: 117 - POLICE/FIRE RETIREMENT:	**40,180.77**	**23,897.00**	**139,792.35**	**83,143.00**	**-186,360.00**	**-269,503.00**	**-324.14%**
Fund: 119 - EMERGENCY FUND							
Function: 6021 - Finance							
Revenue	251,339.05	255,908.00	144,526.02	255,908.00	262,974.00	7,066.00	2.76%
Total Function: 6021 - Finance:	**251,339.05**	**255,908.00**	**144,526.02**	**255,908.00**	**262,974.00**	**7,066.00**	**2.76%**
Function: 9000 - 9000							
Expense	251,339.05	255,879.00	131,473.54	255,908.00	262,974.00	7,066.00	2.76%
Total Function: 9000 - 9000:	**251,339.05**	**255,879.00**	**131,473.54**	**255,908.00**	**262,974.00**	**7,066.00**	**2.76%**
Total Fund: 119 - EMERGENCY FUND:	**0.00**	**29.00**	**13,052.48**	**0.00**	**0.00**	**0.00**	**0.00%**
Fund: 121 - LOCAL OPTION SALES TAX							
Function: 1010 - Police Operations/Crime Prevention							
Expense	2,500.00	0.00	2,500.00	152,500.00	0.00	-152,500.00	-100.00%

Budget Comparison Report

Account Type	2021-2022 Total Activity	2022-2023 Total Budget	2022-2023 YTD Activity Through Feb	Parent Budget 2022-2023 FY2023 Amend	Comparison 1 Budget 2023-2024 FY2024 Dept Request	Comparison 1 to Parent Budget Increase / (Decrease)	%
Total Function: 1010 - Police Operations/Crime Prevention:	**2,500.00**	**0.00**	**2,500.00**	**152,500.00**	**0.00**	**-152,500.00**	**-100.00%**
Function: 1050 - Fire Department							
Expense	2,500.00	0.00	2,500.00	2,500.00	0.00	-2,500.00	-100.00%
Total Function: 1050 - Fire Department:	**2,500.00**	**0.00**	**2,500.00**	**2,500.00**	**0.00**	**-2,500.00**	**-100.00%**
Function: 2011 - Sidewalks							
Expense	0.00	0.00	0.00	50,000.00	0.00	-50,000.00	-100.00%
Total Function: 2011 - Sidewalks:	**0.00**	**0.00**	**0.00**	**50,000.00**	**0.00**	**-50,000.00**	**-100.00%**
Function: 2012 - Street Construction							
Expense	0.00	0.00	33,697.29	0.00	0.00	0.00	0.00%
Total Function: 2012 - Street Construction:	**0.00**	**0.00**	**33,697.29**	**0.00**	**0.00**	**0.00**	**0.00%**
Function: 2020 - Parking							
Expense	0.00	71,500.00	0.00	71,500.00	0.00	-71,500.00	-100.00%
Total Function: 2020 - Parking:	**0.00**	**71,500.00**	**0.00**	**71,500.00**	**0.00**	**-71,500.00**	**-100.00%**
Function: 4030 - Parks							
Expense	29,500.00	0.00	0.00	336,340.00	0.00	-336,340.00	-100.00%
Total Function: 4030 - Parks:	**29,500.00**	**0.00**	**0.00**	**336,340.00**	**0.00**	**-336,340.00**	**-100.00%**
Function: 4065 - Coliseum							
Expense	0.00	0.00	12,000.00	43,000.00	0.00	-43,000.00	-100.00%
Total Function: 4065 - Coliseum:	**0.00**	**0.00**	**12,000.00**	**43,000.00**	**0.00**	**-43,000.00**	**-100.00%**
Function: 5010 - Community Beautification							
Expense	5,000.00	0.00	8,000.00	168,000.00	0.00	-168,000.00	-100.00%
Total Function: 5010 - Community Beautification:	**5,000.00**	**0.00**	**8,000.00**	**168,000.00**	**0.00**	**-168,000.00**	**-100.00%**
Function: 5020 - Economic Development							
Revenue	247,700.00	0.00	0.00	0.00	0.00	0.00	0.00%
Expense	250,000.00	0.00	94,184.15	199,685.00	95,000.00	-104,685.00	-52.43%
Total Function: 5020 - Economic Development:	**-2,300.00**	**0.00**	**-94,184.15**	**-199,685.00**	**-95,000.00**	**104,685.00**	**-52.43%**
Function: 5030 - Housing & Urban Renewal							
Expense	0.00	0.00	5,000.00	250,000.00	0.00	-250,000.00	-100.00%
Total Function: 5030 - Housing & Urban Renewal:	**0.00**	**0.00**	**5,000.00**	**250,000.00**	**0.00**	**-250,000.00**	**-100.00%**
Function: 5040 - Planning & Zoning							
Expense	62,910.50	0.00	0.00	0.00	0.00	0.00	0.00%
Total Function: 5040 - Planning & Zoning:	**62,910.50**	**0.00**	**0.00**	**0.00**	**0.00**	**0.00**	**0.00%**
Function: 5900 - Other Community and Economic Dev.							
Expense	139,781.00	0.00	14,950.00	215,219.00	0.00	-215,219.00	-100.00%
Total Function: 5900 - Other Community and Economic Dev.:	**139,781.00**	**0.00**	**14,950.00**	**215,219.00**	**0.00**	**-215,219.00**	**-100.00%**

Account Type	2021-2022 Total Activity	2022-2023 Total Budget	2022-2023 YTD Activity Through Feb	Parent Budget 2022-2023 FY2023 Amend	Comparison 1 Budget 2023-2024 FY2024 Dept Request	Comparison 1 to Parent Budget Increase / (Decrease)	%
Function: 6011 - Council							
Expense	5,000.00	25,495.00	0.00	50,000.00	5,000.00	-45,000.00	-90.00%
Total Function: 6011 - Council:	**5,000.00**	**25,495.00**	**0.00**	**50,000.00**	**5,000.00**	**-45,000.00**	**-90.00%**
Function: 6021 - Finance							
Revenue	4,712,583.01	4,234,000.00	2,699,939.12	3,800,000.00	3,800,000.00	0.00	0.00%
Total Function: 6021 - Finance:	**4,712,583.01**	**4,234,000.00**	**2,699,939.12**	**3,800,000.00**	**3,800,000.00**	**0.00**	**0.00%**
Function: 6025 - HR							
Expense	0.00	0.00	0.00	23,400.00	0.00	-23,400.00	-100.00%
Total Function: 6025 - HR:	**0.00**	**0.00**	**0.00**	**23,400.00**	**0.00**	**-23,400.00**	**-100.00%**
Function: 6070 - Data Processing,IT							
Expense	12,867.75	0.00	0.00	0.00	0.00	0.00	0.00%
Total Function: 6070 - Data Processing,IT:	**12,867.75**	**0.00**	**0.00**	**0.00**	**0.00**	**0.00**	**0.00%**
Function: 9000 - 9000							
Expense	3,283,307.66	4,926,552.00	1,651,226.76	5,616,681.00	4,465,385.00	-1,151,296.00	-20.50%
Total Function: 9000 - 9000:	**3,283,307.66**	**4,926,552.00**	**1,651,226.76**	**5,616,681.00**	**4,465,385.00**	**-1,151,296.00**	**-20.50%**
Total Fund: 121 - LOCAL OPTION SALES TAX:	**1,166,916.10**	**-789,547.00**	**875,880.92**	**-3,378,825.00**	**-765,385.00**	**2,613,440.00**	**-77.35%**
Fund: 125 - TAX INCREMENT FINANCING							
Function: 5020 - Economic Development							
Expense	240,498.33	186,090.00	76,310.59	215,212.00	628,743.00	413,531.00	192.15%
Total Function: 5020 - Economic Development:	**240,498.33**	**186,090.00**	**76,310.59**	**215,212.00**	**628,743.00**	**413,531.00**	**192.15%**
Function: 6021 - Finance							
Revenue	927,580.35	488,027.00	303,335.02	491,255.00	1,114,541.00	623,286.00	126.88%
Total Function: 6021 - Finance:	**927,580.35**	**488,027.00**	**303,335.02**	**491,255.00**	**1,114,541.00**	**623,286.00**	**126.88%**
Function: 9000 - 9000							
Revenue	9,514.61	0.00	0.00	0.00	0.00	0.00	0.00%
Expense	530,492.45	575,108.00	110,749.66	759,059.00	453,721.00	-305,338.00	-40.23%
Total Function: 9000 - 9000:	**-520,977.84**	**-575,108.00**	**-110,749.66**	**-759,059.00**	**-453,721.00**	**305,338.00**	**-40.23%**
Total Fund: 125 - TAX INCREMENT FINANCING:	**166,104.18**	**-273,171.00**	**116,274.77**	**-483,016.00**	**32,077.00**	**515,093.00**	**-106.64%**
Fund: 126 - TIF-LMI							
Function: 5020 - Economic Development							
Expense	27,044.99	0.00	0.00	0.00	0.00	0.00	0.00%
Total Function: 5020 - Economic Development:	**27,044.99**	**0.00**	**0.00**	**0.00**	**0.00**	**0.00**	**0.00%**
Function: 6021 - Finance							
Revenue	152.00	0.00	0.00	0.00	0.00	0.00	0.00%
Total Function: 6021 - Finance:	**152.00**	**0.00**	**0.00**	**0.00**	**0.00**	**0.00**	**0.00%**

Account Type	2021-2022 Total Activity	2022-2023 Total Budget	2022-2023 YTD Activity Through Feb	Parent Budget 2022-2023 FY2023 Amend	Comparison 1 Budget 2023-2024 FY2024 Dept Request	Comparison 1 to Parent Budget Increase / (Decrease)	%
Function: 9000 - 9000							
Expense	913.11	0.00	0.00	0.00	0.00	0.00	0.00%
Total Function: 9000 - 9000:	**913.11**	**0.00**	**0.00**	**0.00**	**0.00**	**0.00**	**0.00%**
Total Fund: 126 - TIF-LMI:	**-27,806.10**	**0.00**	**0.00**	**0.00**	**0.00**	**0.00**	**0.00%**
Fund: 130 - CITY TORT LIABILITY							
Function: 1010 - Police Operations/Crime Prevention							
Revenue	19,259.15	30,000.00	23,889.66	30,000.00	30,000.00	0.00	0.00%
Expense	59,971.84	30,000.00	31,783.22	50,000.00	30,000.00	-20,000.00	-40.00%
Total Function: 1010 - Police Operations/Crime Prevention:	**-40,712.69**	**0.00**	**-7,893.56**	**-20,000.00**	**0.00**	**20,000.00**	**-100.00%**
Function: 1050 - Fire Department							
Revenue	1,501.00	0.00	0.00	0.00	0.00	0.00	0.00%
Expense	3,301.00	0.00	4,540.00	4,540.00	0.00	-4,540.00	-100.00%
Total Function: 1050 - Fire Department:	**-1,800.00**	**0.00**	**-4,540.00**	**-4,540.00**	**0.00**	**4,540.00**	**-100.00%**
Function: 1075 - Code Enforcement							
Revenue	0.00	0.00	4,118.78	4,119.00	0.00	-4,119.00	-100.00%
Expense	0.00	0.00	4,118.78	4,119.00	0.00	-4,119.00	-100.00%
Total Function: 1075 - Code Enforcement:	**0.00**	**0.00**	**0.00**	**0.00**	**0.00**	**0.00**	**0.00%**
Function: 1099 - Police and Fire Building Exps							
Revenue	12,829.11	0.00	0.00	0.00	0.00	0.00	0.00%
Expense	1,248.75	0.00	14,771.25	14,775.00	0.00	-14,775.00	-100.00%
Total Function: 1099 - Police and Fire Building Exps:	**11,580.36**	**0.00**	**-14,771.25**	**-14,775.00**	**0.00**	**14,775.00**	**-100.00%**
Function: 2010 - Roads, Bridges, Sidewalks							
Revenue	7,472.65	10,000.00	4,850.14	10,020.00	10,000.00	-20.00	-0.20%
Expense	13,905.74	10,000.00	4,677.95	10,000.00	10,000.00	0.00	0.00%
Total Function: 2010 - Roads, Bridges, Sidewalks:	**-6,433.09**	**0.00**	**172.19**	**20.00**	**0.00**	**-20.00**	**-100.00%**
Function: 2030 - Street Lighting							
Revenue	5,339.15	0.00	614.63	1,000.00	0.00	-1,000.00	-100.00%
Expense	8,364.71	0.00	0.00	0.00	0.00	0.00	0.00%
Total Function: 2030 - Street Lighting:	**-3,025.56**	**0.00**	**614.63**	**1,000.00**	**0.00**	**-1,000.00**	**-100.00%**
Function: 2040 - Traffic Safety							
Revenue	72,697.67	0.00	9,631.50	15,000.00	0.00	-15,000.00	-100.00%
Expense	53,738.50	0.00	0.00	0.00	0.00	0.00	0.00%
Total Function: 2040 - Traffic Safety:	**18,959.17**	**0.00**	**9,631.50**	**15,000.00**	**0.00**	**-15,000.00**	**-100.00%**
Function: 2050 - Snow Removal							
Expense	75.00	0.00	0.00	0.00	0.00	0.00	0.00%
Total Function: 2050 - Snow Removal:	**75.00**	**0.00**	**0.00**	**0.00**	**0.00**	**0.00**	**0.00%**

Budget Comparison Report

Account Type	2021-2022 Total Activity	2022-2023 Total Budget	2022-2023 YTD Activity Through Feb	Parent Budget 2022-2023 FY2023 Amend	Comparison 1 Budget 2023-2024 FY2024 Dept Request	Comparison 1 to Parent Budget Increase / (Decrease)	%
Function: 2080 - Airport							
Revenue	25,130.57	0.00	182,411.85	182,412.00	0.00	-182,412.00	-100.00%
Expense	643,655.75	0.00	29,391.35	33,392.00	0.00	-33,392.00	-100.00%
Total Function: 2080 - Airport:	**-618,525.18**	**0.00**	**153,020.50**	**149,020.00**	**0.00**	**-149,020.00**	**-100.00%**
Function: 4010 - Library Services							
Expense	7,500.00	0.00	0.00	0.00	0.00	0.00	0.00%
Total Function: 4010 - Library Services:	**7,500.00**	**0.00**	**0.00**	**0.00**	**0.00**	**0.00**	**0.00%**
Function: 4030 - Parks							
Revenue	116,473.19	0.00	5,194.53	5,200.00	0.00	-5,200.00	-100.00%
Expense	41,893.58	0.00	4,580.00	5,200.00	0.00	-5,200.00	-100.00%
Total Function: 4030 - Parks:	**74,579.61**	**0.00**	**614.53**	**0.00**	**0.00**	**0.00**	**0.00%**
Function: 4045 - Swimming Pools							
Revenue	9,891.10	0.00	0.00	0.00	0.00	0.00	0.00%
Total Function: 4045 - Swimming Pools:	**9,891.10**	**0.00**	**0.00**	**0.00**	**0.00**	**0.00**	**0.00%**
Function: 6021 - Finance							
Revenue	2,977.76	1,000.00	1,709.42	2,000.00	1,000.00	-1,000.00	-50.00%
Total Function: 6021 - Finance:	**2,977.76**	**1,000.00**	**1,709.42**	**2,000.00**	**1,000.00**	**-1,000.00**	**-50.00%**
Function: 6050 - City Hall & Gen Buildings							
Revenue	819.93	0.00	0.00	0.00	0.00	0.00	0.00%
Expense	530.00	0.00	0.00	0.00	0.00	0.00	0.00%
Total Function: 6050 - City Hall & Gen Buildings:	**289.93**	**0.00**	**0.00**	**0.00**	**0.00**	**0.00**	**0.00%**
Function: 6900 - Other Gen Gov							
Revenue	29.89	0.00	0.00	0.00	0.00	0.00	0.00%
Total Function: 6900 - Other Gen Gov:	**29.89**	**0.00**	**0.00**	**0.00**	**0.00**	**0.00**	**0.00%**
Function: 8016 - Sanitary Sewer							
Revenue	15,935.35	0.00	0.00	0.00	0.00	0.00	0.00%
Total Function: 8016 - Sanitary Sewer:	**15,935.35**	**0.00**	**0.00**	**0.00**	**0.00**	**0.00**	**0.00%**
Function: 8050 - Transit							
Revenue	33,567.47	0.00	0.00	0.00	0.00	0.00	0.00%
Expense	67,134.94	0.00	0.00	0.00	0.00	0.00	0.00%
Total Function: 8050 - Transit:	**-33,567.47**	**0.00**	**0.00**	**0.00**	**0.00**	**0.00**	**0.00%**
Function: 9000 - 9000							
Revenue	0.00	0.00	8,064.96	8,065.00	0.00	-8,065.00	-100.00%
Expense	0.00	0.00	51,396.65	150,227.00	0.00	-150,227.00	-100.00%
Total Function: 9000 - 9000:	**0.00**	**0.00**	**-43,331.69**	**-142,162.00**	**0.00**	**142,162.00**	**-100.00%**
Total Fund: 130 - CITY TORT LIABILITY:	**-577,395.82**	**1,000.00**	**95,226.27**	**-14,437.00**	**1,000.00**	**15,437.00**	**-106.93%**

Budget Comparison Report

Account Type	2021-2022 Total Activity	2022-2023 Total Budget	2022-2023 YTD Activity Through Feb	Parent Budget 2022-2023 FY2023 Amend	Comparison 1 Budget 2023-2024 FY2024 Dept Request	Comparison 1 to Parent Budget Increase / (Decrease)	%
Fund: 132 - GRANTS-STATE/LOCAL AGENCIES							
Function: 2040 - Traffic Safety							
Revenue	0.00	0.00	0.00	0.00	60,000.00	60,000.00	0.00%
Expense	0.00	0.00	0.00	60,000.00	0.00	-60,000.00	-100.00%
Total Function: 2040 - Traffic Safety:	**0.00**	**0.00**	**0.00**	**-60,000.00**	**60,000.00**	**120,000.00**	**-200.00%**
Function: 4030 - Parks							
Revenue	28,000.00	66,250.00	1,302.00	62,362.00	0.00	-62,362.00	-100.00%
Expense	152,445.93	176,250.00	60,098.48	66,358.00	0.00	-66,358.00	-100.00%
Total Function: 4030 - Parks:	**-124,445.93**	**-110,000.00**	**-58,796.48**	**-3,996.00**	**0.00**	**3,996.00**	**-100.00%**
Function: 5010 - Community Beautification							
Revenue	10,000.00	0.00	0.00	0.00	0.00	0.00	0.00%
Total Function: 5010 - Community Beautification:	**10,000.00**	**0.00**	**0.00**	**0.00**	**0.00**	**0.00**	**0.00%**
Function: 5020 - Economic Development							
Revenue	520,612.00	3,414,617.00	312,725.00	1,695,018.00	2,274,360.00	579,342.00	34.18%
Expense	785,303.51	3,620,572.00	531,935.70	1,466,783.00	2,453,883.00	987,100.00	67.30%
Total Function: 5020 - Economic Development:	**-264,691.51**	**-205,955.00**	**-219,210.70**	**228,235.00**	**-179,523.00**	**-407,758.00**	**-178.66%**
Function: 9000 - 9000							
Revenue	157,379.68	330,000.00	0.00	92,091.00	375,000.00	282,909.00	307.21%
Total Function: 9000 - 9000:	**157,379.68**	**330,000.00**	**0.00**	**92,091.00**	**375,000.00**	**282,909.00**	**307.21%**
Total Fund: 132 - GRANTS-STATE/LOCAL AGENCIES:	**-221,757.76**	**14,045.00**	**-278,007.18**	**256,330.00**	**255,477.00**	**-853.00**	**-0.33%**
Fund: 133 - UNDESIGNATED FEDERAL GRANTS							
Function: 2900 - Other Public Works							
Revenue	0.00	200,000.00	100,612.34	150,000.00	150,000.00	0.00	0.00%
Expense	27,785.30	182,000.00	92,530.01	141,084.00	141,500.00	416.00	0.29%
Total Function: 2900 - Other Public Works:	**-27,785.30**	**18,000.00**	**8,082.33**	**8,916.00**	**8,500.00**	**-416.00**	**-4.67%**
Function: 4065 - Coliseum							
Revenue	0.00	0.00	0.00	0.00	135,000.00	135,000.00	0.00%
Expense	0.00	0.00	0.00	0.00	244,050.00	244,050.00	0.00%
Total Function: 4065 - Coliseum:	**0.00**	**0.00**	**0.00**	**0.00**	**-109,050.00**	**-109,050.00**	**0.00%**
Function: 9000 - 9000							
Revenue	0.00	33,750.00	0.00	0.00	109,050.00	109,050.00	0.00%
Total Function: 9000 - 9000:	**0.00**	**33,750.00**	**0.00**	**0.00**	**109,050.00**	**109,050.00**	**0.00%**
Total Fund: 133 - UNDESIGNATED FEDERAL GRANTS:	**-27,785.30**	**51,750.00**	**8,082.33**	**8,916.00**	**8,500.00**	**-416.00**	**-4.67%**
Fund: 140 - PARK & REC DONATION FUND							
Function: 4030 - Parks							
Revenue	166,428.14	50,000.00	68,928.71	50,000.00	50,000.00	0.00	0.00%

Budget Comparison Report

Account Type	2021-2022 Total Activity	2022-2023 Total Budget	2022-2023 YTD Activity Through Feb	Parent Budget 2022-2023 FY2023 Amend	Comparison 1 Budget 2023-2024 FY2024 Dept Request	Comparison 1 to Parent Budget Increase / (Decrease)	%
Expense	25,604.89	54,900.00	33,621.84	72,265.00	54,900.00	-17,365.00	-24.03%
Total Function: 4030 - Parks:	**140,823.25**	**-4,900.00**	**35,306.87**	**-22,265.00**	**-4,900.00**	**17,365.00**	**-77.99%**
Function: 4040 - Recreation							
Revenue	0.00	0.00	500.00	500.00	0.00	-500.00	-100.00%
Total Function: 4040 - Recreation:	**0.00**	**0.00**	**500.00**	**500.00**	**0.00**	**-500.00**	**-100.00%**
Function: 4041 - Youth Recreation & Camps							
Revenue	0.00	0.00	675.00	675.00	0.00	-675.00	-100.00%
Expense	0.00	0.00	576.62	500.00	0.00	-500.00	-100.00%
Total Function: 4041 - Youth Recreation & Camps:	**0.00**	**0.00**	**98.38**	**175.00**	**0.00**	**-175.00**	**-100.00%**
Function: 4065 - Coliseum							
Revenue	0.00	0.00	150.00	150.00	0.00	-150.00	-100.00%
Total Function: 4065 - Coliseum:	**0.00**	**0.00**	**150.00**	**150.00**	**0.00**	**-150.00**	**-100.00%**
Function: 6021 - Finance							
Revenue	1,587.71	900.00	3,330.98	5,000.00	2,000.00	-3,000.00	-60.00%
Total Function: 6021 - Finance:	**1,587.71**	**900.00**	**3,330.98**	**5,000.00**	**2,000.00**	**-3,000.00**	**-60.00%**
Function: 9000 - 9000							
Revenue	0.00	0.00	0.00	41,614.00	0.00	-41,614.00	-100.00%
Expense	0.00	0.00	0.00	20,000.00	82,275.00	62,275.00	311.38%
Total Function: 9000 - 9000:	**0.00**	**0.00**	**0.00**	**21,614.00**	**-82,275.00**	**-103,889.00**	**-480.66%**
Total Fund: 140 - PARK & REC DONATION FUND:	**142,410.96**	**-4,000.00**	**39,386.23**	**5,174.00**	**-85,175.00**	**-90,349.00**	**-1,746.21%**
Fund: 141 - MTOWN TENNIS ASSOC							
Function: 6021 - Finance							
Revenue	26.59	20.00	30.51	50.00	20.00	-30.00	-60.00%
Total Function: 6021 - Finance:	**26.59**	**20.00**	**30.51**	**50.00**	**20.00**	**-30.00**	**-60.00%**
Total Fund: 141 - MTOWN TENNIS ASSOC:	**26.59**	**20.00**	**30.51**	**50.00**	**20.00**	**-30.00**	**-60.00%**
Fund: 142 - SOFTBALL ASSOCIATION FUND							
Function: 4030 - Parks							
Revenue	323.99	30,780.00	30,011.27	32,381.00	30,781.00	-1,600.00	-4.94%
Expense	27,914.69	30,780.00	17,566.46	32,381.00	30,781.00	-1,600.00	-4.94%
Total Function: 4030 - Parks:	**-27,590.70**	**0.00**	**12,444.81**	**0.00**	**0.00**	**0.00**	**0.00%**
Total Fund: 142 - SOFTBALL ASSOCIATION FUND:	**-27,590.70**	**0.00**	**12,444.81**	**0.00**	**0.00**	**0.00**	**0.00%**
Fund: 144 - LIVE HEALTHY IOWA							
Function: 4040 - Recreation							
Revenue	985.00	7,500.00	0.00	7,447.00	7,447.00	0.00	0.00%
Expense	0.00	7,547.00	0.00	7,547.00	7,547.00	0.00	0.00%

Account Type	2021-2022 Total Activity	2022-2023 Total Budget	2022-2023 YTD Activity Through Feb	Parent Budget 2022-2023 FY2023 Amend	Comparison 1 Budget 2023-2024 FY2024 Dept Request	Comparison 1 to Parent Budget Increase / (Decrease)	%
Total Function: 4040 - Recreation:	**985.00**	**-47.00**	**0.00**	**-100.00**	**-100.00**	**0.00**	**0.00%**
Function: 6021 - Finance							
Revenue	57.74	40.00	66.25	100.00	100.00	0.00	0.00%
Total Function: 6021 - Finance:	**57.74**	**40.00**	**66.25**	**100.00**	**100.00**	**0.00**	**0.00%**
Total Fund: 144 - LIVE HEALTHY IOWA :	**1,042.74**	**-7.00**	**66.25**	**0.00**	**0.00**	**0.00**	**0.00%**
Fund: 145 - TORNADO GENERAL							
Function: 2010 - Roads, Bridges, Sidewalks							
Revenue	0.00	0.00	63,396.56	63,397.00	0.00	-63,397.00	-100.00%
Total Function: 2010 - Roads, Bridges, Sidewalks:	**0.00**	**0.00**	**63,396.56**	**63,397.00**	**0.00**	**-63,397.00**	**-100.00%**
Function: 2060 - Highway Engineering							
Revenue	137,950.69	0.00	0.00	0.00	0.00	0.00	0.00%
Total Function: 2060 - Highway Engineering:	**137,950.69**	**0.00**	**0.00**	**0.00**	**0.00**	**0.00**	**0.00%**
Function: 4030 - Parks							
Expense	0.00	0.00	0.00	0.00	40,000.00	40,000.00	0.00%
Total Function: 4030 - Parks:	**0.00**	**0.00**	**0.00**	**0.00**	**40,000.00**	**40,000.00**	**0.00%**
Function: 6900 - Other Gen Gov							
Revenue	47,921.45	0.00	0.00	0.00	0.00	0.00	0.00%
Total Function: 6900 - Other Gen Gov:	**47,921.45**	**0.00**	**0.00**	**0.00**	**0.00**	**0.00**	**0.00%**
Function: 9000 - 9000							
Revenue	0.99	0.00	0.00	0.00	0.00	0.00	0.00%
Expense	0.00	0.00	7,450.00	7,450.00	141,000.00	133,550.00	1,792.62%
Total Function: 9000 - 9000:	**0.99**	**0.00**	**-7,450.00**	**-7,450.00**	**-141,000.00**	**-133,550.00**	**1,792.62%**
Total Fund: 145 - TORNADO GENERAL:	**185,873.13**	**0.00**	**55,946.56**	**55,947.00**	**-181,000.00**	**-236,947.00**	**-423.52%**
Fund: 146 - FEMA VALOR							
Function: 5900 - Other Community and Economic Dev.							
Revenue	55,164.71	0.00	0.00	0.00	0.00	0.00	0.00%
Total Function: 5900 - Other Community and Economic Dev.:	**55,164.71**	**0.00**	**0.00**	**0.00**	**0.00**	**0.00**	**0.00%**
Total Fund: 146 - FEMA VALOR:	**55,164.71**	**0.00**	**0.00**	**0.00**	**0.00**	**0.00**	**0.00%**
Fund: 147 - FEMA DEMO							
Function: 1075 - Code Enforcement							
Revenue	16,074.93	0.00	0.00	0.00	0.00	0.00	0.00%
Total Function: 1075 - Code Enforcement:	**16,074.93**	**0.00**	**0.00**	**0.00**	**0.00**	**0.00**	**0.00%**
Total Fund: 147 - FEMA DEMO:	**16,074.93**	**0.00**	**0.00**	**0.00**	**0.00**	**0.00**	**0.00%**

Budget Comparison Report

Account Type	2021-2022 Total Activity	2022-2023 Total Budget	2022-2023 YTD Activity Through Feb	Parent Budget 2022-2023 FY2023 Amend	Comparison 1 Budget 2023-2024 FY2024 Dept Request	Comparison 1 to Parent Budget Increase / (Decrease)	%
Fund: 148 - FEMA-COVID19							
Function: 1010 - Police Operations/Crime Prevention							
Expense	0.00	0.00	0.00	0.00	0.00	0.00	0.00%
Total Function: 1010 - Police Operations/Crime Prevention:	**0.00**	**0.00**	**0.00**	**0.00**	**0.00**	**0.00**	**0.00%**
Function: 1050 - Fire Department							
Expense	7,640.47	0.00	2,280.36	4,500.00	0.00	-4,500.00	-100.00%
Total Function: 1050 - Fire Department:	**7,640.47**	**0.00**	**2,280.36**	**4,500.00**	**0.00**	**-4,500.00**	**-100.00%**
Function: 2010 - Roads, Bridges, Sidewalks							
Expense	77.34	0.00	233.85	500.00	0.00	-500.00	-100.00%
Total Function: 2010 - Roads, Bridges, Sidewalks:	**77.34**	**0.00**	**233.85**	**500.00**	**0.00**	**-500.00**	**-100.00%**
Function: 4010 - Library Services							
Expense	2,216.11	0.00	0.00	0.00	0.00	0.00	0.00%
Total Function: 4010 - Library Services:	**2,216.11**	**0.00**	**0.00**	**0.00**	**0.00**	**0.00**	**0.00%**
Function: 6021 - Finance							
Expense	552.99	0.00	1,672.28	0.00	0.00	0.00	0.00%
Total Function: 6021 - Finance:	**552.99**	**0.00**	**1,672.28**	**0.00**	**0.00**	**0.00**	**0.00%**
Function: 6025 - HR							
Expense	842.35	0.00	0.00	0.00	0.00	0.00	0.00%
Total Function: 6025 - HR:	**842.35**	**0.00**	**0.00**	**0.00**	**0.00**	**0.00**	**0.00%**
Function: 6050 - City Hall & Gen Buildings							
Revenue	10,556.73	8,500.00	8,121.47	8,122.00	13,435.00	5,313.00	65.41%
Expense	0.00	0.00	180.24	500.00	0.00	-500.00	-100.00%
Total Function: 6050 - City Hall & Gen Buildings:	**10,556.73**	**8,500.00**	**7,941.23**	**7,622.00**	**13,435.00**	**5,813.00**	**76.27%**
Function: 8015 - Sewer & Sewage Disposal							
Expense	25.68	0.00	0.00	0.00	0.00	0.00	0.00%
Total Function: 8015 - Sewer & Sewage Disposal:	**25.68**	**0.00**	**0.00**	**0.00**	**0.00**	**0.00**	**0.00%**
Total Fund: 148 - FEMA-COVID19:	**-798.21**	**8,500.00**	**3,754.74**	**2,622.00**	**13,435.00**	**10,813.00**	**412.40%**
Fund: 149 - FEMA - WINDS							
Function: 1010 - Police Operations/Crime Prevention							
Revenue	2,278.85	0.00	0.00	0.00	0.00	0.00	0.00%
Total Function: 1010 - Police Operations/Crime Prevention:	**2,278.85**	**0.00**	**0.00**	**0.00**	**0.00**	**0.00**	**0.00%**
Function: 1050 - Fire Department							
Revenue	8,650.87	0.00	0.00	0.00	0.00	0.00	0.00%
Total Function: 1050 - Fire Department:	**8,650.87**	**0.00**	**0.00**	**0.00**	**0.00**	**0.00**	**0.00%**
Function: 1075 - Code Enforcement							
Expense	223.30	0.00	0.00	0.00	0.00	0.00	0.00%

Budget Comparison Report

Account Type	2021-2022 Total Activity	2022-2023 Total Budget	2022-2023 YTD Activity Through Feb	Parent Budget 2022-2023 FY2023 Amend	Comparison 1 Budget 2023-2024 FY2024 Dept Request	Comparison 1 to Parent Budget Increase / (Decrease)	%
Total Function: 1075 - Code Enforcement:	**223.30**	**0.00**	**0.00**	**0.00**	**0.00**	**0.00**	**0.00%**
Function: 1099 - Police and Fire Building Exps							
Revenue	8,821.33	0.00	0.00	0.00	0.00	0.00	0.00%
Total Function: 1099 - Police and Fire Building Exps:	**8,821.33**	**0.00**	**0.00**	**0.00**	**0.00**	**0.00**	**0.00%**
Function: 2010 - Roads, Bridges, Sidewalks							
Revenue	42,446.43	0.00	3,310,009.85	4,918,526.00	0.00	-4,918,526.00	-100.00%
Expense	340,989.50	0.00	0.00	0.00	0.00	0.00	0.00%
Total Function: 2010 - Roads, Bridges, Sidewalks:	**-298,543.07**	**0.00**	**3,310,009.85**	**4,918,526.00**	**0.00**	**-4,918,526.00**	**-100.00%**
Function: 2060 - Highway Engineering							
Expense	156.35	0.00	0.00	0.00	0.00	0.00	0.00%
Total Function: 2060 - Highway Engineering:	**156.35**	**0.00**	**0.00**	**0.00**	**0.00**	**0.00**	**0.00%**
Function: 2900 - Other Public Works							
Revenue	5,333.58	0.00	88,717.07	98,575.00	0.00	-98,575.00	-100.00%
Expense	5,333.58	0.00	88,717.07	98,575.00	0.00	-98,575.00	-100.00%
Total Function: 2900 - Other Public Works:	**0.00**	**0.00**	**0.00**	**0.00**	**0.00**	**0.00**	**0.00%**
Function: 4030 - Parks							
Expense	8,641.48	0.00	0.00	0.00	0.00	0.00	0.00%
Total Function: 4030 - Parks:	**8,641.48**	**0.00**	**0.00**	**0.00**	**0.00**	**0.00**	**0.00%**
Function: 4040 - Recreation							
Expense	236.53	0.00	0.00	0.00	0.00	0.00	0.00%
Total Function: 4040 - Recreation:	**236.53**	**0.00**	**0.00**	**0.00**	**0.00**	**0.00**	**0.00%**
Function: 5010 - Community Beautification							
Expense	16.88	0.00	0.00	0.00	0.00	0.00	0.00%
Total Function: 5010 - Community Beautification:	**16.88**	**0.00**	**0.00**	**0.00**	**0.00**	**0.00**	**0.00%**
Function: 5030 - Housing & Urban Renewal							
Expense	0.00	0.00	1,060.37	2,345.00	2,345.00	0.00	0.00%
Total Function: 5030 - Housing & Urban Renewal:	**0.00**	**0.00**	**1,060.37**	**2,345.00**	**2,345.00**	**0.00**	**0.00%**
Function: 5040 - Planning & Zoning							
Expense	0.00	0.00	138.34	0.00	0.00	0.00	0.00%
Total Function: 5040 - Planning & Zoning:	**0.00**	**0.00**	**138.34**	**0.00**	**0.00**	**0.00**	**0.00%**
Function: 6012 - City Administrator/Manager							
Expense	5,680.04	0.00	2,236.32	3,518.00	3,518.00	0.00	0.00%
Total Function: 6012 - City Administrator/Manager:	**5,680.04**	**0.00**	**2,236.32**	**3,518.00**	**3,518.00**	**0.00**	**0.00%**
Function: 6021 - Finance							
Expense	74.85	0.00	485.60	2,345.00	2,345.00	0.00	0.00%

Account Type	2021-2022 Total Activity	2022-2023 Total Budget	2022-2023 YTD Activity Through Feb	Parent Budget 2022-2023 FY2023 Amend	Comparison 1 Budget 2023-2024 FY2024 Dept Request	Comparison 1 to Parent Budget Increase / (Decrease)	%
Total Function: 6021 - Finance:	**74.85**	**0.00**	**485.60**	**2,345.00**	**2,345.00**	**0.00**	**0.00%**
Function: 6050 - City Hall & Gen Buildings							
Revenue	3,312.58	0.00	0.00	0.00	0.00	0.00	0.00%
Total Function: 6050 - City Hall & Gen Buildings:	**3,312.58**	**0.00**	**0.00**	**0.00**	**0.00**	**0.00**	**0.00%**
Function: 6051 - Carnegie Bldg							
Revenue	4,708.80	0.00	0.00	0.00	0.00	0.00	0.00%
Total Function: 6051 - Carnegie Bldg:	**4,708.80**	**0.00**	**0.00**	**0.00**	**0.00**	**0.00**	**0.00%**
Function: 6900 - Other Gen Gov							
Revenue	0.00	0.00	0.00	0.00	65,000.00	65,000.00	0.00%
Total Function: 6900 - Other Gen Gov:	**0.00**	**0.00**	**0.00**	**0.00**	**65,000.00**	**65,000.00**	**0.00%**
Function: 8015 - Sewer & Sewage Disposal							
Expense	412.38	0.00	0.00	0.00	0.00	0.00	0.00%
Total Function: 8015 - Sewer & Sewage Disposal:	**412.38**	**0.00**	**0.00**	**0.00**	**0.00**	**0.00**	**0.00%**
Function: 8016 - Sanitary Sewer							
Revenue	55,588.48	0.00	0.00	0.00	0.00	0.00	0.00%
Total Function: 8016 - Sanitary Sewer:	**55,588.48**	**0.00**	**0.00**	**0.00**	**0.00**	**0.00**	**0.00%**
Function: 8065 - Storm Water							
Revenue	2,130.14	0.00	0.00	0.00	0.00	0.00	0.00%
Expense	68.12	0.00	0.00	0.00	0.00	0.00	0.00%
Total Function: 8065 - Storm Water:	**2,062.02**	**0.00**	**0.00**	**0.00**	**0.00**	**0.00**	**0.00%**
Function: 9000 - 9000							
Revenue	4,558.93	0.00	0.00	0.00	0.00	0.00	0.00%
Expense	0.00	0.00	614.96	615.00	0.00	-615.00	-100.00%
Total Function: 9000 - 9000:	**4,558.93**	**0.00**	**-614.96**	**-615.00**	**0.00**	**615.00**	**-100.00%**
Total Fund: 149 - FEMA - WINDS:	**-224,003.02**	**0.00**	**3,305,474.26**	**4,909,703.00**	**56,792.00**	**-4,852,911.00**	**-98.84%**
Fund: 150 - LOCAL PD GRANTS							
Function: 1010 - Police Operations/Crime Prevention							
Revenue	41,967.92	55,000.00	38,656.12	55,000.00	60,000.00	5,000.00	9.09%
Expense	44,035.21	55,715.00	43,682.15	51,405.00	60,000.00	8,595.00	16.72%
Total Function: 1010 - Police Operations/Crime Prevention:	**-2,067.29**	**-715.00**	**-5,026.03**	**3,595.00**	**0.00**	**-3,595.00**	**-100.00%**
Total Fund: 150 - LOCAL PD GRANTS:	**-2,067.29**	**-715.00**	**-5,026.03**	**3,595.00**	**0.00**	**-3,595.00**	**-100.00%**
Fund: 151 - DEPT OF JUSTICE GRANTS							
Function: 1010 - Police Operations/Crime Prevention							
Revenue	31,117.70	125,800.00	53,530.12	158,490.00	56,800.00	-101,690.00	-64.16%
Expense	54,757.65	123,520.00	76,400.43	126,130.00	56,800.00	-69,330.00	-54.97%

Account Type	2021-2022 Total Activity	2022-2023 Total Budget	2022-2023 YTD Activity Through Feb	Parent Budget 2022-2023 FY2023 Amend	Comparison 1 Budget 2023-2024 FY2024 Dept Request	Comparison 1 to Parent Budget Increase / (Decrease)	%
Total Function: 1010 - Police Operations/Crime Prevention:	**-23,639.95**	**2,280.00**	**-22,870.31**	**32,360.00**	**0.00**	**-32,360.00**	**-100.00%**
Total Fund: 151 - DEPT OF JUSTICE GRANTS:	**-23,639.95**	**2,280.00**	**-22,870.31**	**32,360.00**	**0.00**	**-32,360.00**	**-100.00%**
Fund: 152 - POLICE UNDESIGNATED GRANTS							
Function: 1010 - Police Operations/Crime Prevention							
Revenue	103,039.24	111,979.00	88,496.67	142,871.00	109,507.00	-33,364.00	-23.35%
Expense	119,131.08	109,507.00	68,924.77	106,329.00	109,507.00	3,178.00	2.99%
Total Function: 1010 - Police Operations/Crime Prevention:	**-16,091.84**	**2,472.00**	**19,571.90**	**36,542.00**	**0.00**	**-36,542.00**	**-100.00%**
Function: 9000 - 9000							
Expense	2,714.00	0.00	0.00	0.00	0.00	0.00	0.00%
Total Function: 9000 - 9000:	**2,714.00**	**0.00**	**0.00**	**0.00**	**0.00**	**0.00**	**0.00%**
Total Fund: 152 - POLICE UNDESIGNATED GRANTS:	**-18,805.84**	**2,472.00**	**19,571.90**	**36,542.00**	**0.00**	**-36,542.00**	**-100.00%**
Fund: 153 - POLICE DEPT DONATION FUND							
Function: 1010 - Police Operations/Crime Prevention							
Revenue	6,387.49	2,000.00	2,566.50	5,000.00	2,000.00	-3,000.00	-60.00%
Expense	32,603.31	28,450.00	5,089.01	32,780.00	30,850.00	-1,930.00	-5.89%
Total Function: 1010 - Police Operations/Crime Prevention:	**-26,215.82**	**-26,450.00**	**-2,522.51**	**-27,780.00**	**-28,850.00**	**-1,070.00**	**3.85%**
Function: 6021 - Finance							
Revenue	651.94	700.00	732.87	1,200.00	1,200.00	0.00	0.00%
Total Function: 6021 - Finance:	**651.94**	**700.00**	**732.87**	**1,200.00**	**1,200.00**	**0.00**	**0.00%**
Function: 9000 - 9000							
Revenue	2,694.00	0.00	0.00	0.00	0.00	0.00	0.00%
Total Function: 9000 - 9000:	**2,694.00**	**0.00**	**0.00**	**0.00**	**0.00**	**0.00**	**0.00%**
Total Fund: 153 - POLICE DEPT DONATION FUND:	**-22,869.88**	**-25,750.00**	**-1,789.64**	**-26,580.00**	**-27,650.00**	**-1,070.00**	**4.03%**
Fund: 156 - FIRE DEPT DONATION FUND							
Function: 1050 - Fire Department							
Revenue	3,287.48	2,000.00	6,757.00	6,750.00	2,000.00	-4,750.00	-70.37%
Expense	25,845.62	7,000.00	22,410.72	29,500.00	17,000.00	-12,500.00	-42.37%
Total Function: 1050 - Fire Department:	**-22,558.14**	**-5,000.00**	**-15,653.72**	**-22,750.00**	**-15,000.00**	**7,750.00**	**-34.07%**
Function: 6021 - Finance							
Revenue	657.91	0.00	626.95	1,000.00	1,000.00	0.00	0.00%
Total Function: 6021 - Finance:	**657.91**	**0.00**	**626.95**	**1,000.00**	**1,000.00**	**0.00**	**0.00%**
Function: 9000 - 9000							
Revenue	467.19	0.00	0.00	54,124.00	0.00	-54,124.00	-100.00%

Account Type	2021-2022 Total Activity	2022-2023 Total Budget	2022-2023 YTD Activity Through Feb	Parent Budget 2022-2023 FY2023 Amend	Comparison 1 Budget 2023-2024 FY2024 Dept Request	Comparison 1 to Parent Budget Increase / (Decrease)	%
Expense	15,000.00	0.00	0.00	0.00	0.00	0.00	0.00%
Total Function: 9000 - 9000:	**-14,532.81**	**0.00**	**0.00**	**54,124.00**	**0.00**	**-54,124.00**	**-100.00%**
Total Fund: 156 - FIRE DEPT DONATION FUND:	**-36,433.04**	**-5,000.00**	**-15,026.77**	**32,374.00**	**-14,000.00**	**-46,374.00**	**-143.24%**
Fund: 157 - FIRE DEPT GRANTS							
Function: 6021 - Finance							
Revenue	42.40	60.00	0.00	0.00	0.00	0.00	0.00%
Total Function: 6021 - Finance:	**42.40**	**60.00**	**0.00**	**0.00**	**0.00**	**0.00**	**0.00%**
Function: 9000 - 9000							
Expense	4,967.19	0.00	0.00	0.00	0.00	0.00	0.00%
Total Function: 9000 - 9000:	**4,967.19**	**0.00**	**0.00**	**0.00**	**0.00**	**0.00**	**0.00%**
Total Fund: 157 - FIRE DEPT GRANTS:	**-4,924.79**	**60.00**	**0.00**	**0.00**	**0.00**	**0.00**	**0.00%**
Fund: 160 - ECONOMIC DEVELOPMENT GIFT							
Function: 6021 - Finance							
Revenue	505.62	350.00	580.03	900.00	1,000.00	100.00	11.11%
Total Function: 6021 - Finance:	**505.62**	**350.00**	**580.03**	**900.00**	**1,000.00**	**100.00**	**11.11%**
Total Fund: 160 - ECONOMIC DEVELOPMENT GIFT:	**505.62**	**350.00**	**580.03**	**900.00**	**1,000.00**	**100.00**	**11.11%**
Fund: 161 - SURETY DEPOSITS/SUBDIVIDER							
Function: 6021 - Finance							
Revenue	105.50	185.00	121.00	185.00	185.00	0.00	0.00%
Total Function: 6021 - Finance:	**105.50**	**185.00**	**121.00**	**185.00**	**185.00**	**0.00**	**0.00%**
Total Fund: 161 - SURETY DEPOSITS/SUBDIVIDER:	**105.50**	**185.00**	**121.00**	**185.00**	**185.00**	**0.00**	**0.00%**
Fund: 170 - LIBRARY DONATION FUND							
Function: 4010 - Library Services							
Revenue	28,214.12	105,975.00	46,683.44	167,822.00	822,075.00	654,253.00	389.85%
Expense	19,838.47	150,487.00	14,868.20	177,687.00	834,740.00	657,053.00	369.78%
Total Function: 4010 - Library Services:	**8,375.65**	**-44,512.00**	**31,815.24**	**-9,865.00**	**-12,665.00**	**-2,800.00**	**28.38%**
Function: 6021 - Finance							
Revenue	1,137.27	1,300.00	1,365.75	2,400.00	2,400.00	0.00	0.00%
Total Function: 6021 - Finance:	**1,137.27**	**1,300.00**	**1,365.75**	**2,400.00**	**2,400.00**	**0.00**	**0.00%**
Function: 9000 - 9000							
Revenue	0.00	0.00	0.00	3,091.00	0.00	-3,091.00	-100.00%
Total Function: 9000 - 9000:	**0.00**	**0.00**	**0.00**	**3,091.00**	**0.00**	**-3,091.00**	**-100.00%**
Total Fund: 170 - LIBRARY DONATION FUND:	**9,512.92**	**-43,212.00**	**33,180.99**	**-4,374.00**	**-10,265.00**	**-5,891.00**	**134.68%**

Budget Comparison Report

Account Type	2021-2022 Total Activity	2022-2023 Total Budget	2022-2023 YTD Activity Through Feb	Parent Budget 2022-2023 FY2023 Amend	Comparison 1 Budget 2023-2024 FY2024 Dept Request	Comparison 1 to Parent Budget Increase / (Decrease)	%
Fund: 177 - SEIZED ASSETS (POLICE)							
Function: 1010 - Police Operations/Crime Prevention							
Revenue	6,409.00	3,000.00	1,000.00	3,000.00	3,000.00	0.00	0.00%
Expense	17,604.93	4,000.00	2,302.59	4,000.00	4,000.00	0.00	0.00%
Total Function: 1010 - Police Operations/Crime Prevention:	**-11,195.93**	**-1,000.00**	**-1,302.59**	**-1,000.00**	**-1,000.00**	**0.00**	**0.00%**
Function: 6021 - Finance							
Revenue	369.97	250.00	330.42	500.00	500.00	0.00	0.00%
Total Function: 6021 - Finance:	**369.97**	**250.00**	**330.42**	**500.00**	**500.00**	**0.00**	**0.00%**
Total Fund: 177 - SEIZED ASSETS (POLICE):	**-10,825.96**	**-750.00**	**-972.17**	**-500.00**	**-500.00**	**0.00**	**0.00%**
Fund: 179 - OTHER COMM AND ECON DEVELOPMENT							
Function: 6021 - Finance							
Revenue	681.40	0.00	0.00	0.00	0.00	0.00	0.00%
Total Function: 6021 - Finance:	**681.40**	**0.00**	**0.00**	**0.00**	**0.00**	**0.00**	**0.00%**
Function: 9000 - 9000							
Expense	79,839.36	0.00	0.00	0.00	0.00	0.00	0.00%
Total Function: 9000 - 9000:	**79,839.36**	**0.00**	**0.00**	**0.00**	**0.00**	**0.00**	**0.00%**
Total Fund: 179 - OTHER COMM AND ECON DEVELOPMENT:	**-79,157.96**	**0.00**	**0.00**	**0.00**	**0.00**	**0.00**	**0.00%**
Fund: 180 - HOUSING GRANTS							
Function: 6021 - Finance							
Revenue	239.59	0.00	0.00	0.00	0.00	0.00	0.00%
Total Function: 6021 - Finance:	**239.59**	**0.00**	**0.00**	**0.00**	**0.00**	**0.00**	**0.00%**
Function: 9000 - 9000							
Expense	28,073.24	0.00	0.00	0.00	0.00	0.00	0.00%
Total Function: 9000 - 9000:	**28,073.24**	**0.00**	**0.00**	**0.00**	**0.00**	**0.00**	**0.00%**
Total Fund: 180 - HOUSING GRANTS:	**-27,833.65**	**0.00**	**0.00**	**0.00**	**0.00**	**0.00**	**0.00%**
Fund: 183 - FY 08 EDI (ECON DEV INCENTIVE)							
Function: 5020 - Economic Development							
Revenue	0.00	0.00	1,025.00	1,025.00	0.00	-1,025.00	-100.00%
Total Function: 5020 - Economic Development:	**0.00**	**0.00**	**1,025.00**	**1,025.00**	**0.00**	**-1,025.00**	**-100.00%**
Function: 9000 - 9000							
Revenue	0.00	0.00	0.00	12,364.00	0.00	-12,364.00	-100.00%
Total Function: 9000 - 9000:	**0.00**	**0.00**	**0.00**	**12,364.00**	**0.00**	**-12,364.00**	**-100.00%**
Total Fund: 183 - FY 08 EDI (ECON DEV INCENTIVE):	**0.00**	**0.00**	**1,025.00**	**13,389.00**	**0.00**	**-13,389.00**	**-100.00%**

Budget Comparison Report

Account Type	2021-2022 Total Activity	2022-2023 Total Budget	2022-2023 YTD Activity Through Feb	Parent Budget 2022-2023 FY2023 Amend	Comparison 1 Budget 2023-2024 FY2024 Dept Request	Comparison 1 to Parent Budget Increase / (Decrease)	%
Fund: 184 - VOUCHERS - 002, 003							
Function: 5030 - Housing & Urban Renewal							
Revenue	1,275,885.12	1,245,630.00	890,202.42	1,250,142.00	1,248,980.00	-1,162.00	-0.09%
Expense	1,229,524.10	1,223,256.00	831,781.78	1,247,533.00	1,284,128.00	36,595.00	2.93%
Total Function: 5030 - Housing & Urban Renewal:	**46,361.02**	**22,374.00**	**58,420.64**	**2,609.00**	**-35,148.00**	**-37,757.00**	**-1,447.18%**
Total Fund: 184 - VOUCHERS - 002, 003:	**46,361.02**	**22,374.00**	**58,420.64**	**2,609.00**	**-35,148.00**	**-37,757.00**	**-1,447.18%**
Fund: 189 - #6 HUD LEAD GRANT							
Function: 3040 - Health Regulation & Inspections							
Revenue	540,580.29	1,605,541.99	414,695.87	1,647,342.00	1,582,850.00	-64,492.00	-3.91%
Expense	611,572.00	1,605,324.00	585,583.00	1,671,356.00	1,583,162.00	-88,194.00	-5.28%
Total Function: 3040 - Health Regulation & Inspections:	**-70,991.71**	**217.99**	**-170,887.13**	**-24,014.00**	**-312.00**	**23,702.00**	**-98.70%**
Function: 6021 - Finance							
Revenue	21.43	0.00	220.73	400.00	0.00	-400.00	-100.00%
Total Function: 6021 - Finance:	**21.43**	**0.00**	**220.73**	**400.00**	**0.00**	**-400.00**	**-100.00%**
Function: 9000 - 9000							
Revenue	107,912.60	0.00	0.00	0.00	0.00	0.00	0.00%
Total Function: 9000 - 9000:	**107,912.60**	**0.00**	**0.00**	**0.00**	**0.00**	**0.00**	**0.00%**
Total Fund: 189 - #6 HUD LEAD GRANT:	**36,942.32**	**217.99**	**-170,666.40**	**-23,614.00**	**-312.00**	**23,302.00**	**-98.68%**
Fund: 200 - GO BONDS DEBT FUND							
Function: 6021 - Finance							
Revenue	1,019,059.54	811,690.00	468,794.24	822,190.00	2,419,158.00	1,596,968.00	194.23%
Total Function: 6021 - Finance:	**1,019,059.54**	**811,690.00**	**468,794.24**	**822,190.00**	**2,419,158.00**	**1,596,968.00**	**194.23%**
Function: 7010 - Debt Service							
Expense	5,287,543.00	5,846,502.00	589,303.62	5,846,502.00	7,031,413.00	1,184,911.00	20.27%
Total Function: 7010 - Debt Service:	**5,287,543.00**	**5,846,502.00**	**589,303.62**	**5,846,502.00**	**7,031,413.00**	**1,184,911.00**	**20.27%**
Function: 9000 - 9000							
Revenue	4,315,624.85	5,059,564.00	1,494,226.76	5,059,564.00	4,705,439.00	-354,125.00	-7.00%
Total Function: 9000 - 9000:	**4,315,624.85**	**5,059,564.00**	**1,494,226.76**	**5,059,564.00**	**4,705,439.00**	**-354,125.00**	**-7.00%**
Total Fund: 200 - GO BONDS DEBT FUND:	**47,141.39**	**24,752.00**	**1,373,717.38**	**35,252.00**	**93,184.00**	**57,932.00**	**164.34%**
Fund: 300 - CIP COLLECTION FUND							
Function: 6021 - Finance							
Revenue	633,215.68	640,770.00	367,501.49	649,770.00	663,436.00	13,666.00	2.10%
Total Function: 6021 - Finance:	**633,215.68**	**640,770.00**	**367,501.49**	**649,770.00**	**663,436.00**	**13,666.00**	**2.10%**
Function: 9000 - 9000							
Revenue	4,500.00	0.00	0.00	0.00	0.00	0.00	0.00%
Expense	547,938.17	796,599.00	319,252.34	984,444.00	790,509.00	-193,935.00	-19.70%

Account Type	2021-2022 Total Activity	2022-2023 Total Budget	2022-2023 YTD Activity Through Feb	Parent Budget 2022-2023 FY2023 Amend	Comparison 1 Budget 2023-2024 FY2024 Dept Request	Comparison 1 to Parent Budget Increase / (Decrease)	%
Total Function: 9000 - 9000:	**-543,438.17**	**-796,599.00**	**-319,252.34**	**-984,444.00**	**-790,509.00**	**193,935.00**	**-19.70%**
Total Fund: 300 - CIP COLLECTION FUND:	**89,777.51**	**-155,829.00**	**48,249.15**	**-334,674.00**	**-127,073.00**	**207,601.00**	**-62.03%**
Fund: 310 - FEDERAL STREET GRANTS							
Function: 2012 - Street Construction							
Expense	40,062.00	0.00	0.00	0.00	0.00	0.00	0.00%
Total Function: 2012 - Street Construction:	**40,062.00**	**0.00**	**0.00**	**0.00**	**0.00**	**0.00**	**0.00%**
Function: 6021 - Finance							
Revenue	-30.42	0.00	0.00	0.00	0.00	0.00	0.00%
Total Function: 6021 - Finance:	**-30.42**	**0.00**	**0.00**	**0.00**	**0.00**	**0.00**	**0.00%**
Total Fund: 310 - FEDERAL STREET GRANTS:	**-40,092.42**	**0.00**	**0.00**	**0.00**	**0.00**	**0.00**	**0.00%**
Fund: 311 - RISE STREET GRANTS							
Function: 2012 - Street Construction							
Revenue	0.00	2,874,341.00	8,580.41	4,725,771.00	0.00	-4,725,771.00	-100.00%
Expense	248,836.75	4,411,311.00	4,022,958.25	6,474,890.00	25,000.00	-6,449,890.00	-99.61%
Total Function: 2012 - Street Construction:	**-248,836.75**	**-1,536,970.00**	**-4,014,377.84**	**-1,749,119.00**	**-25,000.00**	**1,724,119.00**	**-98.57%**
Function: 9000 - 9000							
Revenue	248,836.75	1,539,030.00	0.00	1,757,699.00	25,000.00	-1,732,699.00	-98.58%
Total Function: 9000 - 9000:	**248,836.75**	**1,539,030.00**	**0.00**	**1,757,699.00**	**25,000.00**	**-1,732,699.00**	**-98.58%**
Total Fund: 311 - RISE STREET GRANTS:	**0.00**	**2,060.00**	**-4,014,377.84**	**8,580.00**	**0.00**	**-8,580.00**	**-100.00%**
Fund: 312 - AIRPORT PROJECT FUND							
Function: 2080 - Airport							
Revenue	690,065.00	166,666.00	469,587.80	611,905.00	150,000.00	-461,905.00	-75.49%
Expense	2,450,081.87	0.00	358,170.88	594,963.00	141,500.00	-453,463.00	-76.22%
Total Function: 2080 - Airport:	**-1,760,016.87**	**166,666.00**	**111,416.92**	**16,942.00**	**8,500.00**	**-8,442.00**	**-49.83%**
Function: 6021 - Finance							
Revenue	5,375.27	0.00	1,441.66	1,500.00	0.00	-1,500.00	-100.00%
Total Function: 6021 - Finance:	**5,375.27**	**0.00**	**1,441.66**	**1,500.00**	**0.00**	**-1,500.00**	**-100.00%**
Function: 9000 - 9000							
Revenue	0.00	0.00	8,380.38	8,381.00	61,500.00	53,119.00	633.80%
Total Function: 9000 - 9000:	**0.00**	**0.00**	**8,380.38**	**8,381.00**	**61,500.00**	**53,119.00**	**633.80%**
Total Fund: 312 - AIRPORT PROJECT FUND:	**-1,754,641.60**	**166,666.00**	**121,238.96**	**26,823.00**	**70,000.00**	**43,177.00**	**160.97%**

Budget Comparison Report

Account Type	2021-2022 Total Activity	2022-2023 Total Budget	2022-2023 YTD Activity Through Feb	Parent Budget 2022-2023 FY2023 Amend	Comparison 1 Budget 2023-2024 FY2024 Dept Request	Comparison 1 to Parent Budget Increase / (Decrease)	%
Fund: 320 - SPECIAL ASSESSMENT PROJECTS							
Function: 6020 - Clerk							
Revenue	537.00	5,000.00	0.00	500.00	500.00	0.00	0.00%
Total Function: 6020 - Clerk:	**537.00**	**5,000.00**	**0.00**	**500.00**	**500.00**	**0.00**	**0.00%**
Total Fund: 320 - SPECIAL ASSESSMENT PROJECTS:	**537.00**	**5,000.00**	**0.00**	**500.00**	**500.00**	**0.00**	**0.00%**
Fund: 340 - BIKE PATH PROJECT FUND							
Function: 4030 - Parks							
Revenue	148,159.53	360,254.00	0.00	120,725.00	1,584,815.00	1,464,090.00	1,212.75%
Expense	77,166.16	602,540.00	56,162.28	63,402.00	1,637,540.00	1,574,138.00	2,482.79%
Total Function: 4030 - Parks:	**70,993.37**	**-242,286.00**	**-56,162.28**	**57,323.00**	**-52,725.00**	**-110,048.00**	**-191.98%**
Function: 9000 - 9000							
Revenue	0.00	0.00	0.00	56,599.00	0.00	-56,599.00	-100.00%
Total Function: 9000 - 9000:	**0.00**	**0.00**	**0.00**	**56,599.00**	**0.00**	**-56,599.00**	**-100.00%**
Total Fund: 340 - BIKE PATH PROJECT FUND:	**70,993.37**	**-242,286.00**	**-56,162.28**	**113,922.00**	**-52,725.00**	**-166,647.00**	**-146.28%**
Fund: 341 - TREES FOREVER PROJECT							
Function: 5010 - Community Beautification							
Revenue	32,329.30	10,000.00	33,965.00	35,000.00	35,000.00	0.00	0.00%
Expense	20,971.39	20,000.00	34,645.00	40,000.00	40,000.00	0.00	0.00%
Total Function: 5010 - Community Beautification:	**11,357.91**	**-10,000.00**	**-680.00**	**-5,000.00**	**-5,000.00**	**0.00**	**0.00%**
Function: 6021 - Finance							
Revenue	238.46	0.00	458.07	800.00	800.00	0.00	0.00%
Total Function: 6021 - Finance:	**238.46**	**0.00**	**458.07**	**800.00**	**800.00**	**0.00**	**0.00%**
Total Fund: 341 - TREES FOREVER PROJECT:	**11,596.37**	**-10,000.00**	**-221.93**	**-4,200.00**	**-4,200.00**	**0.00**	**0.00%**
Fund: 350 - GO BONDS CAPITAL PROJECTS							
Function: 2011 - Sidewalks							
Expense	0.00	0.00	0.00	0.00	0.00	0.00	0.00%
Total Function: 2011 - Sidewalks:	**0.00**	**0.00**	**0.00**	**0.00**	**0.00**	**0.00**	**0.00%**
Function: 6021 - Finance							
Revenue	85.94	0.00	98.59	160.00	200.00	40.00	25.00%
Total Function: 6021 - Finance:	**85.94**	**0.00**	**98.59**	**160.00**	**200.00**	**40.00**	**25.00%**
Total Fund: 350 - GO BONDS CAPITAL PROJECTS:	**85.94**	**0.00**	**98.59**	**160.00**	**200.00**	**40.00**	**25.00%**
Fund: 354 - POLICE & FIRE STATIONS							
Function: 1099 - Police and Fire Building Exps							
Expense	82,741.91	0.00	741.00	741.00	0.00	-741.00	-100.00%
Total Function: 1099 - Police and Fire Building Exps:	**82,741.91**	**0.00**	**741.00**	**741.00**	**0.00**	**-741.00**	**-100.00%**

Budget Comparison Report

Account Type	2021-2022 Total Activity	2022-2023 Total Budget	2022-2023 YTD Activity Through Feb	Parent Budget 2022-2023 FY2023 Amend	Comparison 1 Budget	Comparison 1 to Parent Budget Increase / (Decrease)	%
Function: 6021 - Finance							
Revenue	5,083.40	0.00	0.00	0.00	0.00	0.00	0.00%
Total Function: 6021 - Finance:	**5,083.40**	**0.00**	**0.00**	**0.00**	**0.00**	**0.00**	**0.00%**
Function: 9000 - 9000							
Expense	526,357.40	0.00	0.00	0.00	0.00	0.00	0.00%
Total Function: 9000 - 9000:	**526,357.40**	**0.00**	**0.00**	**0.00**	**0.00**	**0.00**	**0.00%**
Total Fund: 354 - POLICE & FIRE STATIONS:	**-604,015.91**	**0.00**	**-741.00**	**-741.00**	**0.00**	**741.00**	**-100.00%**
Fund: 355 - 2015 GO BONDS (D&D)							
Function: 1075 - Code Enforcement							
Revenue	50,125.34	0.00	18,360.00	25,100.00	10,000.00	-15,100.00	-60.16%
Expense	906,564.79	768,600.00	563,957.17	837,850.00	289,365.00	-548,485.00	-65.46%
Total Function: 1075 - Code Enforcement:	**-856,439.45**	**-768,600.00**	**-545,597.17**	**-812,750.00**	**-279,365.00**	**533,385.00**	**-65.63%**
Function: 6021 - Finance							
Revenue	1,711.93	500.00	609,391.73	619,867.00	500.00	-619,367.00	-99.92%
Expense	0.00	0.00	2,371.00	2,371.00	0.00	-2,371.00	-100.00%
Total Function: 6021 - Finance:	**1,711.93**	**500.00**	**607,020.73**	**617,496.00**	**500.00**	**-616,996.00**	**-99.92%**
Function: 9000 - 9000							
Revenue	1,318,034.62	620,000.00	0.00	20,000.00	20,000.00	0.00	0.00%
Total Function: 9000 - 9000:	**1,318,034.62**	**620,000.00**	**0.00**	**20,000.00**	**20,000.00**	**0.00**	**0.00%**
Total Fund: 355 - 2015 GO BONDS (D&D):	**463,307.10**	**-148,100.00**	**61,423.56**	**-175,254.00**	**-258,865.00**	**-83,611.00**	**47.71%**
Fund: 360 - 2019 GO BONDS & PROJECTS							
Function: 2010 - Roads, Bridges, Sidewalks							
Expense	0.00	0.00	1,444.00	1,444.00	0.00	-1,444.00	-100.00%
Total Function: 2010 - Roads, Bridges, Sidewalks:	**0.00**	**0.00**	**1,444.00**	**1,444.00**	**0.00**	**-1,444.00**	**-100.00%**
Function: 2011 - Sidewalks							
Expense	70,302.63	390,000.00	525,205.92	525,206.00	0.00	-525,206.00	-100.00%
Total Function: 2011 - Sidewalks:	**70,302.63**	**390,000.00**	**525,205.92**	**525,206.00**	**0.00**	**-525,206.00**	**-100.00%**
Function: 2012 - Street Construction							
Expense	0.00	0.00	0.00	0.00	0.00	0.00	0.00%
Total Function: 2012 - Street Construction:	**0.00**	**0.00**	**0.00**	**0.00**	**0.00**	**0.00**	**0.00%**
Function: 4030 - Parks							
Expense	52,607.71	400,000.00	0.00	0.00	0.00	0.00	0.00%
Total Function: 4030 - Parks:	**52,607.71**	**400,000.00**	**0.00**	**0.00**	**0.00**	**0.00**	**0.00%**

Account Type	2021-2022 Total Activity	2022-2023 Total Budget	2022-2023 YTD Activity Through Feb	Parent Budget 2022-2023 FY2023 Amend	Comparison 1 Budget 2023-2024 FY2024 Dept Request	Comparison 1 to Parent Budget Increase / (Decrease)	%
Function: 6021 - Finance							
Revenue	16,995.87	10,000.00	3,153.11	4,318.00	0.00	-4,318.00	-100.00%
Total Function: 6021 - Finance:	**16,995.87**	**10,000.00**	**3,153.11**	**4,318.00**	**0.00**	**-4,318.00**	**-100.00%**
Function: 9000 - 9000							
Revenue	0.00	0.00	0.00	25,065.00	0.00	-25,065.00	-100.00%
Expense	1,750,474.00	104,300.00	834,844.22	836,009.00	0.00	-836,009.00	-100.00%
Total Function: 9000 - 9000:	**-1,750,474.00**	**-104,300.00**	**-834,844.22**	**-810,944.00**	**0.00**	**810,944.00**	**-100.00%**
Total Fund: 360 - 2019 GO BONDS & PROJECTS:	**-1,856,388.47**	**-884,300.00**	**-1,358,341.03**	**-1,333,276.00**	**0.00**	**1,333,276.00**	**-100.00%**
Fund: 361 - LIBRARY BUILDING ADDITION							
Function: 6021 - Finance							
Revenue	14.98	0.00	17.16	30.00	30.00	0.00	0.00%
Total Function: 6021 - Finance:	**14.98**	**0.00**	**17.16**	**30.00**	**30.00**	**0.00**	**0.00%**
Total Fund: 361 - LIBRARY BUILDING ADDITION:	**14.98**	**0.00**	**17.16**	**30.00**	**30.00**	**0.00**	**0.00%**
Fund: 362 - 2020 GO BONDS							
Function: 2012 - Street Construction							
Expense	26,842.98	927,473.00	24,551.27	150,000.00	1,220,553.00	1,070,553.00	713.70%
Total Function: 2012 - Street Construction:	**26,842.98**	**927,473.00**	**24,551.27**	**150,000.00**	**1,220,553.00**	**1,070,553.00**	**713.70%**
Function: 2020 - Parking							
Expense	288,737.63	0.00	0.00	0.00	0.00	0.00	0.00%
Total Function: 2020 - Parking:	**288,737.63**	**0.00**	**0.00**	**0.00**	**0.00**	**0.00**	**0.00%**
Function: 4030 - Parks							
Expense	504,094.60	0.00	0.00	0.00	0.00	0.00	0.00%
Total Function: 4030 - Parks:	**504,094.60**	**0.00**	**0.00**	**0.00**	**0.00**	**0.00**	**0.00%**
Function: 5010 - Community Beautification							
Expense	756.00	0.00	0.00	0.00	0.00	0.00	0.00%
Total Function: 5010 - Community Beautification:	**756.00**	**0.00**	**0.00**	**0.00**	**0.00**	**0.00**	**0.00%**
Function: 6021 - Finance							
Revenue	7,420.75	0.00	7,655.03	6,500.00	0.00	-6,500.00	-100.00%
Total Function: 6021 - Finance:	**7,420.75**	**0.00**	**7,655.03**	**6,500.00**	**0.00**	**-6,500.00**	**-100.00%**
Function: 9000 - 9000							
Revenue	407,949.93	375,223.00	0.00	0.00	642,803.00	642,803.00	0.00%
Total Function: 9000 - 9000:	**407,949.93**	**375,223.00**	**0.00**	**0.00**	**642,803.00**	**642,803.00**	**0.00%**
Total Fund: 362 - 2020 GO BONDS:	**-405,060.53**	**-552,250.00**	**-16,896.24**	**-143,500.00**	**-577,750.00**	**-434,250.00**	**302.61%**

Budget Comparison Report

Account Type	2021-2022 Total Activity	2022-2023 Total Budget	2022-2023 YTD Activity Through Feb	Parent Budget 2022-2023 FY2023 Amend	Comparison 1 Budget 2023-2024 FY2024 Dept Request	Comparison 1 to Parent Budget Increase / (Decrease)	%
Fund: 363 - 2021 GO BONDS							
Function: 1099 - Police and Fire Building Exps							
Expense	0.00	0.00	329.99	91,357.00	15,000.00	-76,357.00	-83.58%
Total Function: 1099 - Police and Fire Building Exps:	**0.00**	**0.00**	**329.99**	**91,357.00**	**15,000.00**	**-76,357.00**	**-83.58%**
Function: 2010 - Roads, Bridges, Sidewalks							
Expense	62,272.00	783,200.00	378,568.58	1,030,320.00	1,797,600.00	767,280.00	74.47%
Total Function: 2010 - Roads, Bridges, Sidewalks:	**62,272.00**	**783,200.00**	**378,568.58**	**1,030,320.00**	**1,797,600.00**	**767,280.00**	**74.47%**
Function: 2012 - Street Construction							
Revenue	125,000.00	600,000.00	25,000.00	525,000.00	0.00	-525,000.00	-100.00%
Expense	390,555.50	6,545,313.00	137,823.38	1,826,320.00	8,928,765.00	7,102,445.00	388.89%
Total Function: 2012 - Street Construction:	**-265,555.50**	**-5,945,313.00**	**-112,823.38**	**-1,301,320.00**	**-8,928,765.00**	**-7,627,445.00**	**586.13%**
Function: 4030 - Parks							
Expense	0.00	0.00	0.00	350,000.00	50,000.00	-300,000.00	-85.71%
Total Function: 4030 - Parks:	**0.00**	**0.00**	**0.00**	**350,000.00**	**50,000.00**	**-300,000.00**	**-85.71%**
Function: 6021 - Finance							
Revenue	9,578,479.20	10,000.00	90,286.40	160,000.00	80,000.00	-80,000.00	-50.00%
Expense	62,615.00	0.00	0.00	0.00	0.00	0.00	0.00%
Total Function: 6021 - Finance:	**9,515,864.20**	**10,000.00**	**90,286.40**	**160,000.00**	**80,000.00**	**-80,000.00**	**-50.00%**
Function: 9000 - 9000							
Revenue	452,827.50	2,817,326.00	246,368.90	374,116.00	5,449,105.00	5,074,989.00	1,356.53%
Expense	1,207,949.93	0.00	0.00	383,184.00	7,000.00	-376,184.00	-98.17%
Total Function: 9000 - 9000:	**-755,122.43**	**2,817,326.00**	**246,368.90**	**-9,068.00**	**5,442,105.00**	**5,451,173.00**	**60,114.39%**
Total Fund: 363 - 2021 GO BONDS:	**8,432,914.27**	**-3,901,187.00**	**-155,066.65**	**-2,622,065.00**	**-5,269,260.00**	**-2,647,195.00**	**100.96%**
Fund: 364 - 2022 GO BONDS							
Function: 2010 - Roads, Bridges, Sidewalks							
Expense	0.00	4,150,000.00	0.00	100,000.00	301,786.00	201,786.00	201.79%
Total Function: 2010 - Roads, Bridges, Sidewalks:	**0.00**	**4,150,000.00**	**0.00**	**100,000.00**	**301,786.00**	**201,786.00**	**201.79%**
Function: 2011 - Sidewalks							
Expense	0.00	600,000.00	0.00	70,000.00	544,000.00	474,000.00	677.14%
Total Function: 2011 - Sidewalks:	**0.00**	**600,000.00**	**0.00**	**70,000.00**	**544,000.00**	**474,000.00**	**677.14%**
Function: 2012 - Street Construction							
Expense	0.00	0.00	28,439.00	490,500.00	163,500.00	-327,000.00	-66.67%
Total Function: 2012 - Street Construction:	**0.00**	**0.00**	**28,439.00**	**490,500.00**	**163,500.00**	**-327,000.00**	**-66.67%**
Function: 2020 - Parking							
Expense	0.00	390,000.00	0.00	254,000.00	859,500.00	605,500.00	238.39%
Total Function: 2020 - Parking:	**0.00**	**390,000.00**	**0.00**	**254,000.00**	**859,500.00**	**605,500.00**	**238.39%**

Budget Comparison Report

Account Type	2021-2022 Total Activity	2022-2023 Total Budget	2022-2023 YTD Activity Through Feb	Parent Budget 2022-2023 FY2023 Amend	Comparison 1 Budget 2023-2024 FY2024 Dept Request	Comparison 1 to Parent Budget Increase / (Decrease)	%
Function: 4030 - Parks							
Revenue	0.00	0.00	0.00	200,000.00	0.00	-200,000.00	-100.00%
Expense	0.00	4,260,000.00	37,682.50	5,310,000.00	0.00	-5,310,000.00	-100.00%
Total Function: 4030 - Parks:	**0.00**	**-4,260,000.00**	**-37,682.50**	**-5,110,000.00**	**0.00**	**5,110,000.00**	**-100.00%**
Function: 6021 - Finance							
Revenue	0.00	10,000,000.00	9,751,918.00	9,825,991.00	80,000.00	-9,745,991.00	-99.19%
Expense	0.00	0.00	58,744.00	162,844.00	0.00	-162,844.00	-100.00%
Total Function: 6021 - Finance:	**0.00**	**10,000,000.00**	**9,693,174.00**	**9,663,147.00**	**80,000.00**	**-9,583,147.00**	**-99.17%**
Function: 9000 - 9000							
Revenue	0.00	0.00	0.00	100,000.00	604,750.00	504,750.00	504.75%
Expense	0.00	600,000.00	0.00	0.00	2,463,464.00	2,463,464.00	0.00%
Total Function: 9000 - 9000:	**0.00**	**-600,000.00**	**0.00**	**100,000.00**	**-1,858,714.00**	**-1,958,714.00**	**-1,958.71%**
Total Fund: 364 - 2022 GO BONDS:	**0.00**	**0.00**	**9,627,052.50**	**3,738,647.00**	**-3,647,500.00**	**-7,386,147.00**	**-197.56%**
Fund: 365 - 2023 GO BONDS							
Function: 2010 - Roads, Bridges, Sidewalks							
Expense	0.00	0.00	0.00	0.00	10,856,000.00	10,856,000.00	0.00%
Total Function: 2010 - Roads, Bridges, Sidewalks:	**0.00**	**0.00**	**0.00**	**0.00**	**10,856,000.00**	**10,856,000.00**	**0.00%**
Function: 2011 - Sidewalks							
Expense	0.00	0.00	0.00	0.00	500,000.00	500,000.00	0.00%
Total Function: 2011 - Sidewalks:	**0.00**	**0.00**	**0.00**	**0.00**	**500,000.00**	**500,000.00**	**0.00%**
Function: 6021 - Finance							
Revenue	0.00	0.00	0.00	0.00	11,356,000.00	11,356,000.00	0.00%
Total Function: 6021 - Finance:	**0.00**	**0.00**	**0.00**	**0.00**	**11,356,000.00**	**11,356,000.00**	**0.00%**
Total Fund: 365 - 2023 GO BONDS:	**0.00**	**0.00**	**0.00**	**0.00**	**0.00**	**0.00**	**0.00%**
Fund: 381 - 2019 CY STREET,SIDEWALK,PARKING PROJECTS							
Function: 2011 - Sidewalks							
Expense	561,198.35	0.00	0.00	0.00	0.00	0.00	0.00%
Total Function: 2011 - Sidewalks:	**561,198.35**	**0.00**	**0.00**	**0.00**	**0.00**	**0.00**	**0.00%**
Function: 2020 - Parking							
Revenue	100,000.00	0.00	0.00	0.00	0.00	0.00	0.00%
Expense	542,345.38	0.00	0.00	0.00	0.00	0.00	0.00%
Total Function: 2020 - Parking:	**-442,345.38**	**0.00**	**0.00**	**0.00**	**0.00**	**0.00**	**0.00%**
Function: 6021 - Finance							
Revenue	2,121.06	0.00	0.00	0.00	0.00	0.00	0.00%
Total Function: 6021 - Finance:	**2,121.06**	**0.00**	**0.00**	**0.00**	**0.00**	**0.00**	**0.00%**

Account Type	2021-2022 Total Activity	2022-2023 Total Budget	2022-2023 YTD Activity Through Feb	Parent Budget 2022-2023 FY2023 Amend	Comparison 1 Budget 2023-2024 FY2024 Dept Request	Comparison 1 to Parent Budget Increase / (Decrease)	%
Function: 9000 - 9000							
Revenue	288,550.00	0.00	0.00	0.00	0.00	0.00	0.00%
Expense	33,882.67	0.00	0.00	0.00	0.00	0.00	0.00%
Total Function: 9000 - 9000:	**254,667.33**	**0.00**	**0.00**	**0.00**	**0.00**	**0.00**	**0.00%**
Total Fund: 381 - 2019 CY STREET,SIDEWALK,PARKING PROJE	**-746,755.34**	**0.00**	**0.00**	**0.00**	**0.00**	**0.00**	**0.00%**
Fund: 383 - COLISEUM REMODEL							
Function: 4065 - Coliseum							
Revenue	210.00	0.00	0.00	0.00	0.00	0.00	0.00%
Expense	32,312.19	0.00	0.00	0.00	0.00	0.00	0.00%
Total Function: 4065 - Coliseum:	**-32,102.19**	**0.00**	**0.00**	**0.00**	**0.00**	**0.00**	**0.00%**
Function: 6021 - Finance							
Revenue	0.10	0.00	0.00	0.00	0.00	0.00	0.00%
Total Function: 6021 - Finance:	**0.10**	**0.00**	**0.00**	**0.00**	**0.00**	**0.00**	**0.00%**
Function: 9000 - 9000							
Revenue	32,102.09	0.00	0.00	0.00	0.00	0.00	0.00%
Total Function: 9000 - 9000:	**32,102.09**	**0.00**	**0.00**	**0.00**	**0.00**	**0.00**	**0.00%**
Total Fund: 383 - COLISEUM REMODEL:	**0.00**	**0.00**	**0.00**	**0.00**	**0.00**	**0.00**	**0.00%**
Fund: 389 - AMERICAN RESCUE PLAN							
Function: 1010 - Police Operations/Crime Prevention							
Expense	0.00	0.00	36,641.70	65,398.00	121,733.00	56,335.00	86.14%
Total Function: 1010 - Police Operations/Crime Prevention:	**0.00**	**0.00**	**36,641.70**	**65,398.00**	**121,733.00**	**56,335.00**	**86.14%**
Function: 6021 - Finance							
Revenue	1,993,589.42	1,986,933.00	1,993,589.41	1,993,590.00	0.00	-1,993,590.00	-100.00%
Total Function: 6021 - Finance:	**1,993,589.42**	**1,986,933.00**	**1,993,589.41**	**1,993,590.00**	**0.00**	**-1,993,590.00**	**-100.00%**
Function: 9000 - 9000							
Expense	187,901.62	3,138,147.00	0.00	888,147.00	2,511,130.00	1,622,983.00	182.74%
Total Function: 9000 - 9000:	**187,901.62**	**3,138,147.00**	**0.00**	**888,147.00**	**2,511,130.00**	**1,622,983.00**	**182.74%**
Total Fund: 389 - AMERICAN RESCUE PLAN:	**1,805,687.80**	**-1,151,214.00**	**1,956,947.71**	**1,040,045.00**	**-2,632,863.00**	**-3,672,908.00**	**-353.15%**
Fund: 392 - TIF DISTRICT III CAP PROJECTS							
Function: 6021 - Finance							
Revenue	67.92	0.00	77.92	0.00	0.00	0.00	0.00%
Total Function: 6021 - Finance:	**67.92**	**0.00**	**77.92**	**0.00**	**0.00**	**0.00**	**0.00%**
Total Fund: 392 - TIF DISTRICT III CAP PROJECTS:	**67.92**	**0.00**	**77.92**	**0.00**	**0.00**	**0.00**	**0.00%**

Budget Comparison Report

Account Type	2021-2022 Total Activity	2022-2023 Total Budget	2022-2023 YTD Activity Through Feb	Parent Budget 2022-2023 FY2023 Amend	Comparison 1 Budget 2023-2024 FY2024 Dept Request	Comparison 1 to Parent Budget Increase / (Decrease)	%
Fund: 395 - ECONOMIC DEVELOPMENT PROJECT FUND							
Function: 2012 - Street Construction							
Revenue	0.00	0.00	0.00	273,909.00	0.00	-273,909.00	-100.00%
Expense	137,948.97	1,365,270.00	932,504.54	1,363,896.00	7,000.00	-1,356,896.00	-99.49%
Total Function: 2012 - Street Construction:	**-137,948.97**	**-1,365,270.00**	**-932,504.54**	**-1,089,987.00**	**-7,000.00**	**1,082,987.00**	**-99.36%**
Function: 5020 - Economic Development							
Revenue	0.00	467,960.00	0.00	0.00	0.00	0.00	0.00%
Expense	1,176,882.06	0.00	0.00	0.00	0.00	0.00	0.00%
Total Function: 5020 - Economic Development:	**-1,176,882.06**	**467,960.00**	**0.00**	**0.00**	**0.00**	**0.00**	**0.00%**
Function: 9000 - 9000							
Revenue	1,314,831.03	1,116,821.00	344,190.08	1,095,117.00	7,000.00	-1,088,117.00	-99.36%
Total Function: 9000 - 9000:	**1,314,831.03**	**1,116,821.00**	**344,190.08**	**1,095,117.00**	**7,000.00**	**-1,088,117.00**	**-99.36%**
Total Fund: 395 - ECONOMIC DEVELOPMENT PROJECT FUND:	**0.00**	**219,511.00**	**-588,314.46**	**5,130.00**	**0.00**	**-5,130.00**	**-100.00%**
Fund: 610 - WATER POLLUTION CONTROL							
Function: 8015 - Sewer & Sewage Disposal							
Revenue	1,485.65	0.00	17,524.26	12,429.00	0.00	-12,429.00	-100.00%
Expense	3,837,643.54	4,101,065.00	1,831,499.24	3,457,779.00	5,023,204.00	1,565,425.00	45.27%
Total Function: 8015 - Sewer & Sewage Disposal:	**-3,836,157.89**	**-4,101,065.00**	**-1,813,974.98**	**-3,445,350.00**	**-5,023,204.00**	**-1,577,854.00**	**45.80%**
Function: 8016 - Sanitary Sewer							
Revenue	76.70	0.00	13.01	15.00	0.00	-15.00	-100.00%
Expense	2,312,672.92	7,345,089.00	950,490.45	2,815,211.00	2,437,229.00	-377,982.00	-13.43%
Total Function: 8016 - Sanitary Sewer:	**-2,312,596.22**	**-7,345,089.00**	**-950,477.44**	**-2,815,196.00**	**-2,437,229.00**	**377,967.00**	**-13.43%**
Function: 9000 - 9000							
Revenue	7,005,649.07	11,949,972.00	2,766,935.56	6,764,364.00	7,964,951.00	1,200,587.00	17.75%
Expense	859,360.10	503,818.00	0.00	503,818.00	504,518.00	700.00	0.14%
Total Function: 9000 - 9000:	**6,146,288.97**	**11,446,154.00**	**2,766,935.56**	**6,260,546.00**	**7,460,433.00**	**1,199,887.00**	**19.17%**
Total Fund: 610 - WATER POLLUTION CONTROL:	**-2,465.14**	**0.00**	**2,483.14**	**0.00**	**0.00**	**0.00**	**0.00%**
Fund: 611 - WPCP REVENUE							
Function: 6021 - Finance							
Revenue	182,897.05	4,100,000.00	254,763.13	350,000.00	100,000.00	-250,000.00	-71.43%
Total Function: 6021 - Finance:	**182,897.05**	**4,100,000.00**	**254,763.13**	**350,000.00**	**100,000.00**	**-250,000.00**	**-71.43%**
Function: 8015 - Sewer & Sewage Disposal							
Revenue	7,954,993.75	8,051,496.00	5,504,957.56	7,979,900.00	7,992,700.00	12,800.00	0.16%
Total Function: 8015 - Sewer & Sewage Disposal:	**7,954,993.75**	**8,051,496.00**	**5,504,957.56**	**7,979,900.00**	**7,992,700.00**	**12,800.00**	**0.16%**
Function: 8016 - Sanitary Sewer							
Revenue	205.73	0.00	60.98	3.00	0.00	-3.00	-100.00%

Budget Comparison Report

Account Type	2021-2022 Total Activity	2022-2023 Total Budget	2022-2023 YTD Activity Through Feb	Parent Budget 2022-2023 FY2023 Amend	Comparison 1 Budget 2023-2024 FY2024 Dept Request	Comparison 1 to Parent Budget Increase / (Decrease)	%
Total Function: 8016 - Sanitary Sewer:	**205.73**	**0.00**	**60.98**	**3.00**	**0.00**	**-3.00**	**-100.00%**
Function: 9000 - 9000							
Revenue	0.00	0.00	18,580.00	18,580.00	0.00	-18,580.00	-100.00%
Expense	7,424,654.19	12,753,333.00	3,048,924.98	6,886,376.00	9,128,351.00	2,241,975.00	32.56%
Total Function: 9000 - 9000:	**-7,424,654.19**	**-12,753,333.00**	**-3,030,344.98**	**-6,867,796.00**	**-9,128,351.00**	**-2,260,555.00**	**32.92%**
Total Fund: 611 - WPCP REVENUE:	**713,442.34**	**-601,837.00**	**2,729,436.69**	**1,462,107.00**	**-1,035,651.00**	**-2,497,758.00**	**-170.83%**
Fund: 612 - WPCP REVENUE BOND FUND							
Function: 8016 - Sanitary Sewer							
Revenue	292,387.86	0.00	0.00	0.00	0.00	0.00	0.00%
Expense	372,515.10	0.00	0.00	0.00	0.00	0.00	0.00%
Total Function: 8016 - Sanitary Sewer:	**-80,127.24**	**0.00**	**0.00**	**0.00**	**0.00**	**0.00**	**0.00%**
Function: 9000 - 9000							
Revenue	372,515.10	0.00	0.00	0.00	0.00	0.00	0.00%
Expense	288,550.00	0.00	0.00	0.00	0.00	0.00	0.00%
Total Function: 9000 - 9000:	**83,965.10**	**0.00**	**0.00**	**0.00**	**0.00**	**0.00**	**0.00%**
Total Fund: 612 - WPCP REVENUE BOND FUND:	**3,837.86**	**0.00**	**0.00**	**0.00**	**0.00**	**0.00**	**0.00%**
Fund: 614 - WPCP CAPITAL IMPROVEMENT RSRV							
Function: 6021 - Finance							
Revenue	10,309.11	25,000.00	11,826.09	25,000.00	25,000.00	0.00	0.00%
Total Function: 6021 - Finance:	**10,309.11**	**25,000.00**	**11,826.09**	**25,000.00**	**25,000.00**	**0.00**	**0.00%**
Total Fund: 614 - WPCP CAPITAL IMPROVEMENT RSRV:	**10,309.11**	**25,000.00**	**11,826.09**	**25,000.00**	**25,000.00**	**0.00**	**0.00%**
Fund: 615 - WPCP PLANT & IMPROVEMENTS							
Function: 8015 - Sewer & Sewage Disposal							
Revenue	0.00	8,000,000.00	11,063.52	7,454,519.00	4,795,050.00	-2,659,469.00	-35.68%
Expense	413,132.12	8,406,160.00	500,652.16	2,996,683.00	4,245,600.00	1,248,917.00	41.68%
Total Function: 8015 - Sewer & Sewage Disposal:	**-413,132.12**	**-406,160.00**	**-489,588.64**	**4,457,836.00**	**549,450.00**	**-3,908,386.00**	**-87.67%**
Function: 9000 - 9000							
Revenue	413,132.12	0.00	133,151.42	90,419.00	447,500.00	357,081.00	394.92%
Expense	0.00	0.00	0.00	4,548,255.00	996,950.00	-3,551,305.00	-78.08%
Total Function: 9000 - 9000:	**413,132.12**	**0.00**	**133,151.42**	**-4,457,836.00**	**-549,450.00**	**3,908,386.00**	**-87.67%**
Total Fund: 615 - WPCP PLANT & IMPROVEMENTS:	**0.00**	**-406,160.00**	**-356,437.22**	**0.00**	**0.00**	**0.00**	**0.00%**
Fund: 616 - SANITARY SEWER REHAB PROJECT							
Function: 8016 - Sanitary Sewer							
Expense	0.00	0.00	191,854.27	4,548,255.00	699,450.00	-3,848,805.00	-84.62%
Total Function: 8016 - Sanitary Sewer:	**0.00**	**0.00**	**191,854.27**	**4,548,255.00**	**699,450.00**	**-3,848,805.00**	**-84.62%**

Budget Comparison Report

Account Type	2021-2022 Total Activity	2022-2023 Total Budget	2022-2023 YTD Activity Through Feb	Parent Budget 2022-2023 FY2023 Amend	Comparison 1 Budget 2023-2024 FY2024 Dept Request	Comparison 1 to Parent Budget Increase / (Decrease)	%
Function: 9000 - 9000							
Revenue	0.00	0.00	191,854.27	4,548,255.00	699,450.00	-3,848,805.00	-84.62%
Total Function: 9000 - 9000:	**0.00**	**0.00**	**191,854.27**	**4,548,255.00**	**699,450.00**	**-3,848,805.00**	**-84.62%**
Total Fund: 616 - SANITARY SEWER REHAB PROJECT:	**0.00**	**0.00**	**0.00**	**0.00**	**0.00**	**0.00**	**0.00%**
Fund: 617 - SANITARY SEWER NEW CONSTRUCTN							
Function: 8016 - Sanitary Sewer							
Revenue	8,233.00	15,500.00	4,601.36	8,500.00	8,500.00	0.00	0.00%
Expense	2,900.00	0.00	0.00	0.00	0.00	0.00	0.00%
Total Function: 8016 - Sanitary Sewer:	**5,333.00**	**15,500.00**	**4,601.36**	**8,500.00**	**8,500.00**	**0.00**	**0.00%**
Total Fund: 617 - SANITARY SEWER NEW CONSTRUCTN:	**5,333.00**	**15,500.00**	**4,601.36**	**8,500.00**	**8,500.00**	**0.00**	**0.00%**
Fund: 618 - TORNADO-WPCP							
Function: 8015 - Sewer & Sewage Disposal							
Revenue	580.97	0.00	0.00	0.00	0.00	0.00	0.00%
Total Function: 8015 - Sewer & Sewage Disposal:	**580.97**	**0.00**	**0.00**	**0.00**	**0.00**	**0.00**	**0.00%**
Function: 9000 - 9000							
Revenue	0.00	0.00	0.00	0.00	0.00	0.00	0.00%
Total Function: 9000 - 9000:	**0.00**	**0.00**	**0.00**	**0.00**	**0.00**	**0.00**	**0.00%**
Total Fund: 618 - TORNADO-WPCP:	**580.97**	**0.00**	**0.00**	**0.00**	**0.00**	**0.00**	**0.00%**
Fund: 650 - URBAN TREE FUND							
Function: 8040 - URBAN TREES							
Revenue	0.00	123,444.00	0.00	0.00	0.00	0.00	0.00%
Expense	0.00	120,959.00	0.00	0.00	0.00	0.00	0.00%
Total Function: 8040 - URBAN TREES:	**0.00**	**2,485.00**	**0.00**	**0.00**	**0.00**	**0.00**	**0.00%**
Total Fund: 650 - URBAN TREE FUND:	**0.00**	**2,485.00**	**0.00**	**0.00**	**0.00**	**0.00**	**0.00%**
Fund: 690 - TRANSIT OPERATING							
Function: 6021 - Finance							
Revenue	5,362.00	1,000.00	7,587.77	7,000.00	7,000.00	0.00	0.00%
Total Function: 6021 - Finance:	**5,362.00**	**1,000.00**	**7,587.77**	**7,000.00**	**7,000.00**	**0.00**	**0.00%**
Function: 8050 - Transit							
Revenue	832,482.23	727,863.00	766,316.72	1,004,468.00	727,007.00	-277,461.00	-27.62%
Expense	838,422.85	980,540.00	619,505.11	1,102,247.00	1,194,302.00	92,055.00	8.35%
Total Function: 8050 - Transit:	**-5,940.62**	**-252,677.00**	**146,811.61**	**-97,779.00**	**-467,295.00**	**-369,516.00**	**377.91%**
Function: 9000 - 9000							
Revenue	155,551.67	250,000.00	129,164.97	258,090.00	275,000.00	16,910.00	6.55%

Account Type	2021-2022 Total Activity	2022-2023 Total Budget	2022-2023 YTD Activity Through Feb	Parent Budget 2022-2023 FY2023 Amend	Comparison 1 Budget 2023-2024 FY2024 Dept Request	Comparison 1 to Parent Budget Increase / (Decrease)	%
Total Function: 9000 - 9000:	**155,551.67**	**250,000.00**	**129,164.97**	**258,090.00**	**275,000.00**	**16,910.00**	**6.55%**
Total Fund: 690 - TRANSIT OPERATING:	**154,973.05**	**-1,677.00**	**283,564.35**	**167,311.00**	**-185,295.00**	**-352,606.00**	**-210.75%**
Fund: 740 - STORM SEWER UTILITY							
Function: 1040 - Flood Control							
Expense	1,661.00	0.00	0.00	0.00	0.00	0.00	0.00%
Total Function: 1040 - Flood Control:	**1,661.00**	**0.00**	**0.00**	**0.00**	**0.00**	**0.00**	**0.00%**
Function: 6021 - Finance							
Revenue	17,216.59	9,000.00	23,983.59	40,000.00	9,000.00	-31,000.00	-77.50%
Total Function: 6021 - Finance:	**17,216.59**	**9,000.00**	**23,983.59**	**40,000.00**	**9,000.00**	**-31,000.00**	**-77.50%**
Function: 8065 - Storm Water							
Revenue	2,177,020.30	1,353,000.00	909,838.91	1,366,617.00	1,351,500.00	-15,117.00	-1.11%
Expense	1,707,078.24	1,110,988.00	593,550.61	1,165,701.00	957,168.00	-208,533.00	-17.89%
Total Function: 8065 - Storm Water:	**469,942.06**	**242,012.00**	**316,288.30**	**200,916.00**	**394,332.00**	**193,416.00**	**96.27%**
Function: 8067 - Storm Water-Dike							
Expense	233,323.01	25,195.00	18,012.97	28,581.00	18,687.00	-9,894.00	-34.62%
Total Function: 8067 - Storm Water-Dike:	**233,323.01**	**25,195.00**	**18,012.97**	**28,581.00**	**18,687.00**	**-9,894.00**	**-34.62%**
Function: 8068 - Storm Water-Permit							
Revenue	0.00	0.00	124.00	124.00	0.00	-124.00	-100.00%
Total Function: 8068 - Storm Water-Permit:	**0.00**	**0.00**	**124.00**	**124.00**	**0.00**	**-124.00**	**-100.00%**
Function: 9000 - 9000							
Revenue	33,732.65	0.00	4,170.00	4,170.00	0.00	-4,170.00	-100.00%
Expense	603,673.00	841,337.00	0.00	764,011.00	541,506.00	-222,505.00	-29.12%
Total Function: 9000 - 9000:	**-569,940.35**	**-841,337.00**	**4,170.00**	**-759,841.00**	**-541,506.00**	**218,335.00**	**-28.73%**
Total Fund: 740 - STORM SEWER UTILITY:	**-317,765.71**	**-615,520.00**	**326,552.92**	**-547,382.00**	**-156,861.00**	**390,521.00**	**-71.34%**
Fund: 741 - 2016 GO STORM WATER PROJ							
Function: 6021 - Finance							
Revenue	15,734.77	2,000.00	10,166.52	12,000.00	2,000.00	-10,000.00	-83.33%
Total Function: 6021 - Finance:	**15,734.77**	**2,000.00**	**10,166.52**	**12,000.00**	**2,000.00**	**-10,000.00**	**-83.33%**
Function: 8065 - Storm Water							
Expense	1,685,111.21	0.00	753,578.95	995,108.00	0.00	-995,108.00	-100.00%
Total Function: 8065 - Storm Water:	**1,685,111.21**	**0.00**	**753,578.95**	**995,108.00**	**0.00**	**-995,108.00**	**-100.00%**
Function: 9000 - 9000							
Expense	0.00	0.00	0.00	0.00	0.00	0.00	0.00%
Total Function: 9000 - 9000:	**0.00**	**0.00**	**0.00**	**0.00**	**0.00**	**0.00**	**0.00%**
Total Fund: 741 - 2016 GO STORM WATER PROJ:	**-1,669,376.44**	**2,000.00**	**-743,412.43**	**-983,108.00**	**2,000.00**	**985,108.00**	**-100.20%**

Budget Comparison Report

Account Type	2021-2022 Total Activity			Parent Budget	Comparison 1 Budget	Comparison 1 to Parent Budget Increase / (Decrease)	%
Fund: 742 - TORNADO - STORM/SEWER							
Function: 8065 - Storm Water							
Revenue	898.25	0.00	0.00	0.00	0.00	0.00	0.00%
Total Function: 8065 - Storm Water:	**898.25**	**0.00**	**0.00**	**0.00**	**0.00**	**0.00**	**0.00%**
Function: 9000 - 9000							
Revenue	0.00	0.00	0.00	0.00	0.00	0.00	0.00%
Total Function: 9000 - 9000:	**0.00**	**0.00**	**0.00**	**0.00**	**0.00**	**0.00**	**0.00%**
Total Fund: 742 - TORNADO - STORM/SEWER:	**898.25**	**0.00**	**0.00**	**0.00**	**0.00**	**0.00**	**0.00%**
Fund: 750 - COMPOSTING FACILITY							
Function: 6021 - Finance							
Revenue	1,147.32	800.00	1,761.06	1,600.00	800.00	-800.00	-50.00%
Total Function: 6021 - Finance:	**1,147.32**	**800.00**	**1,761.06**	**1,600.00**	**800.00**	**-800.00**	**-50.00%**
Function: 8070 - Compost							
Revenue	105,653.02	59,500.00	53,279.64	71,578.00	70,500.00	-1,078.00	-1.51%
Expense	67,739.78	68,798.00	23,550.62	187,657.00	90,072.00	-97,585.00	-52.00%
Total Function: 8070 - Compost:	**37,913.24**	**-9,298.00**	**29,729.02**	**-116,079.00**	**-19,572.00**	**96,507.00**	**-83.14%**
Total Fund: 750 - COMPOSTING FACILITY:	**39,060.56**	**-8,498.00**	**31,490.08**	**-114,479.00**	**-18,772.00**	**95,707.00**	**-83.60%**
Fund: 760 - P&R CONCESSIONS ENTERPRISE							
Function: 8080 - P&R Concessions							
Revenue	41,790.96	41,000.00	13,295.36	46,000.00	48,000.00	2,000.00	4.35%
Expense	43,050.11	45,558.00	29,294.78	42,173.00	40,291.00	-1,882.00	-4.46%
Total Function: 8080 - P&R Concessions:	**-1,259.15**	**-4,558.00**	**-15,999.42**	**3,827.00**	**7,709.00**	**3,882.00**	**101.44%**
Function: 9000 - 9000							
Revenue	0.00	0.00	0.00	20,000.00	0.00	-20,000.00	-100.00%
Total Function: 9000 - 9000:	**0.00**	**0.00**	**0.00**	**20,000.00**	**0.00**	**-20,000.00**	**-100.00%**
Total Fund: 760 - P&R CONCESSIONS ENTERPRISE:	**-1,259.15**	**-4,558.00**	**-15,999.42**	**23,827.00**	**7,709.00**	**-16,118.00**	**-67.65%**
Report Total:	**6,079,008.43**	**-10,650,535.24**	**13,397,989.16**	**2,380,507.00**	**-15,602,574.00**	**-17,983,081.00**	**-755.43%**

Fund Summary

Fund	2021-2022 Total Activity	2022-2023 Total Budget	2022-2023 YTD Activity Through Feb	Parent Budget 2022-2023 FY2023 Amend	Comparison 1 Budget 2023-2024 FY2024 Dept Request	Comparison 1 to Parent Budget Increase / (Decrease)	%
001 - GENERAL FUND	0.00	-0.23	-1,214,213.42	-49,633.00	0.00	49,633.00	-100.00%
010 - CASH FLOW RESERVE FUND	121,111.96	114,512.00	31,058.68	146,512.00	348,000.00	201,488.00	137.52%
030 - CAPITAL RESERVE	0.00	0.00	-102,580.08	0.00	0.00	0.00	0.00%
031 - CAPITAL RSRV-BLDG MAINT	-81,420.26	-57,250.00	-14,535.67	-14,858.00	-138,275.00	-123,417.00	830.64%
032 - CIP LARGE VEHICLE/EQUIPMENT	110,377.15	0.00	0.00	93,755.00	94,086.00	331.00	0.35%
110 - ROAD USE TAX	701,553.16	-1,538,771.00	769,183.99	191,650.00	-468,734.00	-660,384.00	-344.58%
112 - EMPLOYEE BENEFITS FUND	241,122.12	66,388.00	372,315.06	103,433.00	-740,650.00	-844,083.00	-816.07%
117 - POLICE/FIRE RETIREMENT	40,180.77	23,897.00	139,792.35	83,143.00	-186,360.00	-269,503.00	-324.14%
119 - EMERGENCY FUND	0.00	29.00	13,052.48	0.00	0.00	0.00	0.00%
121 - LOCAL OPTION SALES TAX	1,166,916.10	-789,547.00	875,880.92	-3,378,825.00	-765,385.00	2,613,440.00	-77.35%
125 - TAX INCREMENT FINANCING	166,104.18	-273,171.00	116,274.77	-483,016.00	32,077.00	515,093.00	-106.64%
126 - TIF-LMI	-27,806.10	0.00	0.00	0.00	0.00	0.00	0.00%
130 - CITY TORT LIABILITY	-577,395.82	1,000.00	95,226.27	-14,437.00	1,000.00	15,437.00	-106.93%
132 - GRANTS-STATE/LOCAL AGENCIES	-221,757.76	14,045.00	-278,007.18	256,330.00	255,477.00	-853.00	-0.33%
133 - UNDESIGNATED FEDERAL GRANTS	-27,785.30	51,750.00	8,082.33	8,916.00	8,500.00	-416.00	-4.67%
140 - PARK & REC DONATION FUND	142,410.96	-4,000.00	39,386.23	5,174.00	-85,175.00	-90,349.00	-1,746.21%
141 - MTOWN TENNIS ASSOC	26.59	20.00	30.51	50.00	20.00	-30.00	-60.00%
142 - SOFTBALL ASSOCIATION FUND	-27,590.70	0.00	12,444.81	0.00	0.00	0.00	0.00%
144 - LIVE HEALTHY IOWA	1,042.74	-7.00	66.25	0.00	0.00	0.00	0.00%
145 - TORNADO GENERAL	185,873.13	0.00	55,946.56	55,947.00	-181,000.00	-236,947.00	-423.52%
146 - FEMA VALOR	55,164.71	0.00	0.00	0.00	0.00	0.00	0.00%
147 - FEMA DEMO	16,074.93	0.00	0.00	0.00	0.00	0.00	0.00%
148 - FEMA-COVID19	-798.21	8,500.00	3,754.74	2,622.00	13,435.00	10,813.00	412.40%
149 - FEMA - WINDS	-224,003.02	0.00	3,305,474.26	4,909,703.00	56,792.00	-4,852,911.00	-98.84%
150 - LOCAL PD GRANTS	-2,067.29	-715.00	-5,026.03	3,595.00	0.00	-3,595.00	-100.00%
151 - DEPT OF JUSTICE GRANTS	-23,639.95	2,280.00	-22,870.31	32,360.00	0.00	-32,360.00	-100.00%
152 - POLICE UNDESIGNATED GRANTS	-18,805.84	2,472.00	19,571.90	36,542.00	0.00	-36,542.00	-100.00%
153 - POLICE DEPT DONATION FUND	-22,869.88	-25,750.00	-1,789.64	-26,580.00	-27,650.00	-1,070.00	4.03%
156 - FIRE DEPT DONATION FUND	-36,433.04	-5,000.00	-15,026.77	32,374.00	-14,000.00	-46,374.00	-143.24%
157 - FIRE DEPT GRANTS	-4,924.79	60.00	0.00	0.00	0.00	0.00	0.00%
160 - ECONOMIC DEVELOPMENT GIFT	505.62	350.00	580.03	900.00	1,000.00	100.00	11.11%
161 - SURETY DEPOSITS/SUBDIVIDER	105.50	185.00	121.00	185.00	185.00	0.00	0.00%
170 - LIBRARY DONATION FUND	9,512.92	-43,212.00	33,180.99	-4,374.00	-10,265.00	-5,891.00	134.68%
177 - SEIZED ASSETS (POLICE)	-10,825.96	-750.00	-972.17	-500.00	-500.00	0.00	0.00%
179 - OTHER COMM AND ECON DEVELOP	-79,157.96	0.00	0.00	0.00	0.00	0.00	0.00%
180 - HOUSING GRANTS	-27,833.65	0.00	0.00	0.00	0.00	0.00	0.00%
183 - FY 08 EDI (ECON DEV INCENTIVE)	0.00	0.00	1,025.00	13,389.00	0.00	-13,389.00	-100.00%
184 - VOUCHERS - 002, 003	46,361.02	22,374.00	58,420.64	2,609.00	-35,148.00	-37,757.00	-1,447.18%

Budget Comparison Report

Fund	2021-2022 Total Activity	2022-2023 Total Budget	2022-2023 YTD Activity Through Feb	Parent Budget 2022-2023 FY2023 Amend	Comparison 1 Budget 2023-2024 FY2024 Dept Request	Comparison 1 to Parent Budget Increase / (Decrease)	%
189 - #6 HUD LEAD GRANT	36,942.32	217.99	-170,666.40	-23,614.00	-312.00	23,302.00	-98.68%
200 - GO BONDS DEBT FUND	47,141.39	24,752.00	1,373,717.38	35,252.00	93,184.00	57,932.00	164.34%
300 - CIP COLLECTION FUND	89,777.51	-155,829.00	48,249.15	-334,674.00	-127,073.00	207,601.00	-62.03%
310 - FEDERAL STREET GRANTS	-40,092.42	0.00	0.00	0.00	0.00	0.00	0.00%
311 - RISE STREET GRANTS	0.00	2,060.00	-4,014,377.84	8,580.00	0.00	-8,580.00	-100.00%
312 - AIRPORT PROJECT FUND	-1,754,641.60	166,666.00	121,238.96	26,823.00	70,000.00	43,177.00	160.97%
320 - SPECIAL ASSESSMENT PROJECTS	537.00	5,000.00	0.00	500.00	500.00	0.00	0.00%
340 - BIKE PATH PROJECT FUND	70,993.37	-242,286.00	-56,162.28	113,922.00	-52,725.00	-166,647.00	-146.28%
341 - TREES FOREVER PROJECT	11,596.37	-10,000.00	-221.93	-4,200.00	-4,200.00	0.00	0.00%
350 - GO BONDS CAPITAL PROJECTS	85.94	0.00	98.59	160.00	200.00	40.00	25.00%
354 - POLICE & FIRE STATIONS	-604,015.91	0.00	-741.00	-741.00	0.00	741.00	-100.00%
355 - 2015 GO BONDS (D&D)	463,307.10	-148,100.00	61,423.56	-175,254.00	-258,865.00	-83,611.00	47.71%
360 - 2019 GO BONDS & PROJECTS	-1,856,388.47	-884,300.00	-1,358,341.03	-1,333,276.00	0.00	1,333,276.00	-100.00%
361 - LIBRARY BUILDING ADDITION	14.98	0.00	17.16	30.00	30.00	0.00	0.00%
362 - 2020 GO BONDS	-405,060.53	-552,250.00	-16,896.24	-143,500.00	-577,750.00	-434,250.00	302.61%
363 - 2021 GO BONDS	8,432,914.27	-3,901,187.00	-155,066.65	-2,622,065.00	-5,269,260.00	-2,647,195.00	100.96%
364 - 2022 GO BONDS	0.00	0.00	9,627,052.50	3,738,647.00	-3,647,500.00	-7,386,147.00	-197.56%
365 - 2023 GO BONDS	0.00	0.00	0.00	0.00	0.00	0.00	0.00%
381 - 2019 CY STREET,SIDEWALK,PARKING	-746,755.34	0.00	0.00	0.00	0.00	0.00	0.00%
383 - COLISEUM REMODEL	0.00	0.00	0.00	0.00	0.00	0.00	0.00%
389 - AMERICAN RESCUE PLAN	1,805,687.80	-1,151,214.00	1,956,947.71	1,040,045.00	-2,632,863.00	-3,672,908.00	-353.15%
392 - TIF DISTRICT III CAP PROJECTS	67.92	0.00	77.92	0.00	0.00	0.00	0.00%
395 - ECONOMIC DEVELOPMENT PROJEC	0.00	219,511.00	-588,314.46	5,130.00	0.00	-5,130.00	-100.00%
610 - WATER POLLUTION CONTROL	-2,465.14	0.00	2,483.14	0.00	0.00	0.00	0.00%
611 - WPCP REVENUE	713,442.34	-601,837.00	2,729,436.69	1,462,107.00	-1,035,651.00	-2,497,758.00	-170.83%
612 - WPCP REVENUE BOND FUND	3,837.86	0.00	0.00	0.00	0.00	0.00	0.00%
614 - WPCP CAPITAL IMPROVEMENT RSR	10,309.11	25,000.00	11,826.09	25,000.00	25,000.00	0.00	0.00%
615 - WPCP PLANT & IMPROVEMENTS	0.00	-406,160.00	-356,437.22	0.00	0.00	0.00	0.00%
616 - SANITARY SEWER REHAB PROJECT	0.00	0.00	0.00	0.00	0.00	0.00	0.00%
617 - SANITARY SEWER NEW CONSTRUCT	5,333.00	15,500.00	4,601.36	8,500.00	8,500.00	0.00	0.00%
618 - TORNADO-WPCP	580.97	0.00	0.00	0.00	0.00	0.00	0.00%
650 - URBAN TREE FUND	0.00	2,485.00	0.00	0.00	0.00	0.00	0.00%
690 - TRANSIT OPERATING	154,973.05	-1,677.00	283,564.35	167,311.00	-185,295.00	-352,606.00	-210.75%
740 - STORM SEWER UTILITY	-317,765.71	-615,520.00	326,552.92	-547,382.00	-156,861.00	390,521.00	-71.34%
741 - 2016 GO STORM WATER PROJ	-1,669,376.44	2,000.00	-743,412.43	-983,108.00	2,000.00	985,108.00	-100.20%
742 - TORNADO - STORM/SEWER	898.25	0.00	0.00	0.00	0.00	0.00	0.00%
750 - COMPOSTING FACILITY	39,060.56	-8,498.00	31,490.08	-114,479.00	-18,772.00	95,707.00	-83.60%
760 - P&R CONCESSIONS ENTERPRISE	-1,259.15	-4,558.00	-15,999.42	23,827.00	7,709.00	-16,118.00	-67.65%
Report Total:	**6,079,008.43**	**-10,650,535.24**	**13,397,989.16**	**2,380,507.00**	**-15,602,574.00**	**-17,983,081.00**	**-755.43%**

Marshalltown Water Works Revenues less Expenditures	1,577,370	1,237,279

TOTAL EXCESS REVENUES OVER (UNDER) EXPENDITURES	3,957,877	(14,365,295)

PROJECTED CASH BALANCES 4/10/23

Fund	Fund Name	ENDING CASH 06/30/22	REVISED FY 23 NET BUDGET	ESTIMATED 06/30/23 ENDING BALANCE	FY 24 NET BUDGET	FY 24 ESTIMATED ENDING
001	GENERAL FUND (incl. $8.10 levy)	3,567,795.12	(49,633.00)	3,518,162.12	0.00	3,518,162.12
010	CASH FLOW RESERVE FUND (17% of fund 001 exp)	2,597,495.17	146,512.00	2,744,007.17	348,000.00	3,092,007.17
030	CAPITAL RESERVE (CIP-GF; Levy in Fund 300)	-	-	-	-	-
031	CAPITAL RSRV-BLDG MAINT	260,113.94	(14,858.00)	245,255.94	(138,275.00)	106,980.94
032	CIP LARGE VEHICLE/EQUIPMENT (CIP: Levy in Fund 300)	-	93,755.00	93,755.00	94,086.00	187,841.00
	TOTAL GENERAL FUNDS	6,425,404.23	175,776.00	6,601,180.23	303,811.00	6,904,991.23
110	ROAD USE TAX	6,303,147.02	191,650.00	6,494,797.02	(468,734.00)	6,026,063.02
112	EMPLOYEE BENEFITS FUND (Levy for actual amt needed)	3,417,943.48	103,433.00	3,521,376.48	(740,650.00)	2,780,726.48
117	POLICE/FIRE RETIREMENT (Levy for actual amount needed)	582,899.93	83,143.00	666,042.93	(186,360.00)	479,682.93
119	EMERGENCY FUND (Levy maximum $ .27)	-	-	-	-	-
121	LOCAL OPTION SALES TAX (L.O.S.T.)	6,654,632.96	(3,378,825.00)	3,275,807.96	(765,385.00)	2,510,422.96
125	TAX INCREMENT FINANCING (TIF)	469,295.69	(483,016.00)	(13,720.31)	32,077.00	18,356.69
130	CITY TORT LIABILITY (Insurance Claims)	82,551.75	(14,437.00)	68,114.75	1,000.00	69,114.75
132	GRANTS-STATE/LOCAL AGENCIES (Catalyst Grant, CDBG, Revitalization, MICA, IGP, TSIP, Elks Park, MICA,etc.)	(226,794.55)	256,330.00	29,535.45	255,477.00	285,012.45
133	Undesignated Federal Grants (incl. Brownfield)	(27,785.30)	8,916.00	(18,869.30)	8,500.00	(10,369.30)
140	PARK & REC DONATION FUND (Incl. Park improvements, benches, trees, etc.)	270,158.41	5,174.00	275,332.41	(85,175.00)	190,157.41
141	MTOWN TENNIS ASSOC	2,821.58	50.00	2,871.58	20.00	2,891.58
142	SOFTBALL ASSOCIATION FUND (City is reimbursed)	(19,744.23)	-	(19,744.23)	-	(19,744.23)
144	LIVE HEALTHY IOWA (Hersey)	6,128.83	-	6,128.83	-	6,128.83
145	TORNADO GENERAL (Insurance & FEMA)	231,916.46	55,947.00	287,863.46	(181,000.00)	106,863.46
147	FEMA DEMO (tornado related)	-	-	-	-	-
148	FEMA- COVID19	(16,057.20)	2,622.00	(13,435.20)	13,435.00	(0.20)
149	FEMA - WINDS (Derecho)	(4,564,245.98)	4,909,703.00	345,457.02	56,792.00	402,249.02

Fund	Fund Name	ENDING CASH 06/30/22	REVISED FY 23 NET BUDGET	ESTIMATED 06/30/23 ENDING BALANCE	FY 24 NET BUDGET	FY 24 ESTIMATED ENDING
150	COPS FAST GRANTS (School Resource Officer)	(2,067.29)	3,595.00	1,527.71	-	1,527.71
151	DEPT OF JUSTICE GRANTS (Edward Byrne Justice Assistance Grant, Bulletproof Vest Partnership,MPACT)	(32,359.86)	32,360.00	0.14		0.14
152	POLICE UNDESIGNATED GRANTS (Violence Against Women, Drug Enforcement, DCAT-MPACT, Camp OT,, Cornovirus, etc.)	(36,541.82)	36,542.00	0.18	-	0.18
153	POLICE DEPT DONATION FUND (Incl. Child Safety Seats, Canine)	68,938.82	(26,580.00)	42,358.82	(27,650.00)	14,708.82
156	FIRE DEPT DONATION FUND	61,515.49	32,374.00	93,889.49	(14,000.00)	79,889.49
157	FIRE DEPT GRANTS	-	-	-	-	-
160	ECONOMIC DEVELOPMENT GIFT	53,662.00	900.00	54,562.00	1,000.00	55,562.00
161	SURETY DEPOSITS/SUBDIVIDER	11,195.29	185.00	11,380.29	185.00	11,565.29
170	LIBRARY DONATION FUND (Mobile unit & garage)	122,407.61	(4,374.00)	118,033.61	(10,265.00)	107,768.61
177	SEIZED ASSETS (Police Dept. Abandoned Assets)	25,431.36	(500.00)	24,931.36	(500.00)	24,431.36
183	FY 08 EDI (ECON DEV INCENTIVE)- Funds recovered when sell property	(13,389.25)	13,389.00	(0.25)		(0.25)
184	VOUCHERS - 002, 003 (Section 8 Housing Choice)	177,459.99	2,609.00	180,068.99	(35,148.00)	144,920.99
189	#6 HUD LEAD GRANT	23,925.54	(23,614.00)	311.54	(312.00)	(0.46)
	TOTAL SPECIAL REVENUES (Includes TIF 125 & 126)	13,627,046.73	1,807,576.00	15,434,622.73	(2,146,693.00)	13,287,929.73
200	GO BONDS DEBT FUND	172,476.91	35,252.00	207,728.91	93,184.00	300,912.91
300	CIP COLLECTION FUND (Levy $ .675/$1,000)	545,652.93	(334,674.00)	210,978.93	(127,073.00)	83,905.93
310	FEDERAL STREET GRANTS	-	-	-	-	-
311	RISE STREET GRANTS (Edgewood extension)	-	8,580.00	8,580.00		8,580.00
312	AIRPORT PROJECT FUND	(47,352.21)	26,823.00	(20,529.21)	70,000.00	49,470.79
320	SPECIAL ASSESSMENT PROJECTS (Sidewalks)	(14,510.95)	500.00	(14,010.95)	500.00	(13,510.95)
340	BIKE PATH PROJECT FUND	(61,197.07)	113,922.00	52,724.93	(52,725.00)	(0.07)
341	TREES FOREVER PROJECT	34,323.40	(4,200.00)	30,123.40	(4,200.00)	25,923.40
350	GO BONDS CAPITAL PROJECTS	9,120.40	160.00	9,280.40	200.00	9,480.40

Fund	Fund Name	ENDING CASH 06/30/22	REVISED FY 23 NET BUDGET	ESTIMATED 06/30/23 ENDING BALANCE	FY 24 NET BUDGET	FY 24 ESTIMATED ENDING
354	POLICE & FIRE STATIONS	741.00	(741.00)	-		-
355	2015 GO BONDS (Dangerous&Delapidated)	476,711.83	(175,254.00)	301,457.83	(258,865.00)	42,592.83
357	2018 CY STREET PROJECTS (3rd St Bridge, Microsurfacing)	-	-	-		-
360	2019 GO BONDS & PROJECTS (sidewalks, streets, parks)	1,333,276.13	(1,333,276.00)	0.13		0.13
361	LIBRARY BUILDING ADDITION (Budget only, requires public hearing)	1,587.78	30.00	1,617.78	30.00	1,647.78
362	2020 GO BONDS (RR, trails, streets, sidewalks, tennis courts, etc)	721,249.58	(143,500.00)	577,749.58	(577,750.00)	(0.42)
363	2021 GO BONDS (Viaduct, State Street reconstruction, D&D, Street improvements, softball parking lot)	8,432,914.27	(2,622,065.00)	5,810,849.27	(5,269,260.00)	541,589.27
364	2022 GO BONDS (Street & park improvements, splashpad, sidewalks, parking lot, D&D blds)	-	3,738,647.00	3,738,647.00	(3,647,500.00)	91,147.00
365	2023 GO BONDS (Street infrastructure and improvements)	-	-	-	-	-
389	AMERICAN RESCUE PLAN (ARPA) (Edgewood Ext, State St, GF)	1,805,687.80	1,040,045.00	2,845,732.80	(2,632,863.00)	212,869.80
392	TIF DISTRICT III CAP PROJECTS	7,208.04	-	7,208.04		7,208.04
395	ECONOMIC DEVELOPMENT PROJECT (E. Merle Hibbs, S. 7th Ave, UPH access road, Creekside Estates)	-	5,130.00	5,130.00	-	5,130.00
	TOTAL CAPITAL PROJECTS	13,245,412.93	320,127.00	13,565,539.93	(12,499,506.00)	1,066,033.93
610	WATER POLLUTION CONTROL	-	-	-	-	-
611	WPCP REVENUE	18,918,270.02	1,462,107.00	20,380,377.02	(1,035,651.00)	19,344,726.02
612	WPCP REVENUE BOND FUND	-	-	-	-	-
614	WPCP CAPITAL IMPROVEMENT RSRV	1,094,108.09	25,000.00	1,119,108.09	25,000.00	1,144,108.09
615	WPCP PLANT & IMPROVEMENTS	-	-	-	-	-
616	SANITARY SEWER REHAB PROJECT	-	-	-	-	-
617	SANITARY SEWER NEW CONSTRUCTN REVENUE	147,976.84	8,500.00	156,476.84	8,500.00	164,976.84
690	TRANSIT OPERATING	638,326.81	167,311.00	805,637.81	(185,295.00)	620,342.81

Fund	Fund Name	ENDING CASH 06/30/22	REVISED FY 23 NET BUDGET	ESTIMATED 06/30/23 ENDING BALANCE	FY 24 NET BUDGET	FY 24 ESTIMATED ENDING
740	STORM SEWER UTILITY	1,941,702.25	(547,382.00)	1,394,320.25	(156,861.00)	1,237,459.25
741	2016 GO STORM WATER PROJ	1,340,270.37	(983,108.00)	357,162.37	2,000.00	359,162.37
742	TORNADO-STORM/SEWER	-	-	-	-	-
750	COMPOSTING FACILITY	139,211.51	(114,479.00)	24,732.51	(18,772.00)	5,960.51
760	P&R CONCESSIONS ENTERPRISE	(18,805.93)	23,827.00	5,021.07	7,709.00	12,730.07
	MARSHALLTOWN WATER WORKS			-		-
	TOTAL PROPRIETARY FUNDS	24,201,059.96	41,776.00	24,242,835.96	(1,353,370.00)	22,889,465.96
TOTAL	GRAND TOTAL CITY	57,671,400.76	2,380,507.00	60,051,907.76	(15,602,574.00)	44,449,333.76
	Marshalltown Water Works	7,562,835.00	1,577,370.00	9,140,205.00	1,237,279.00	10,377,484.00
	TOTAL CASH BALANCES FOR BUDGET	**65,234,235.76**	**3,957,877.00**	**69,192,112.76**	**(14,365,295.00)**	**54,826,817.76**

MARSHALLTOWN MORE THAN EVER

City of Marshalltown, IA

Budget Comparison Report

Account Summary

Account Number		2021-2022 Total Activity	2022-2023 Total Budget	2022-2023 YTD Activity Through Feb	Parent Budget 2022-2023 FY2023 Amend	Comparison 1 Budget 2023-2024 FY2024 Dept Request	Comparison 1 to Parent Budget Increase / (Decrease)	%
Category: 40 - TAXES								
001.4010.4011.000	DELIQUENT PROPERTY TAXES	766.81	0.00	146.70	0.00	0.00	0.00	0.00%
001.4010.4040.000	PROPERTY TAXES CURRENT LIE	203,589.22	227,998.00	121,505.18	227,998.00	223,538.00	-4,460.00	-1.96%
001.4010.4110.000	UTILITY EXCISE TAX	24,661.13	22,016.00	11,864.46	22,016.00	27,359.00	5,343.00	24.27%
001.4010.4150.000	CURRENT MOBILE HOME TAXE	205.65	260.00	142.27	260.00	260.00	0.00	0.00%
001.4010.4151.000	DELIQ MOBILE HOME TAXES	12.27	0.00	16.07	0.00	0.00	0.00	0.00%
001.6021.4010.000	PROPERTY TAXES-CURRENT	6,107,662.04	6,839,933.00	3,645,148.23	6,839,933.00	6,706,145.00	-133,788.00	-1.96%
001.6021.4011.000	DELIQUENT PROPERTY TAXES	24,762.52	0.00	4,741.47	0.00	0.00	0.00	0.00%
001.6021.4012.000	PROP TAXES - BAND	9,123.79	10,032.00	5,347.86	10,032.00	8,023.00	-2,009.00	-20.03%
001.6021.4016.000	PROP TAXES,FISHER CM CTR	82,963.87	91,191.00	48,612.09	91,191.00	89,092.00	-2,099.00	-2.30%
001.6021.4018.000	PROP TAXES, TRANSIT	125,838.09	227,981.00	120,740.52	227,981.00	245,014.00	17,033.00	7.47%
001.6021.4020.000	PROP TAX CURR EMERGENCY I	27,087.47	30,982.00	16,505.95	30,982.00	32,372.00	1,390.00	4.49%
001.6021.4021.000	DELINQ EMERGENCY MGNT	98.62	0.00	18.96	0.00	0.00	0.00	0.00%
001.6021.4030.000	PROPERTY TAX CURR AG LAND	16,698.27	17,017.00	10,278.77	17,017.00	17,395.00	378.00	2.22%
001.6021.4031.000	DELINQ AG LAND TAXES	0.00	0.00	0.36	0.00	0.00	0.00	0.00%
001.6021.4070.000	PROP TAX CURR TORT LIAB INS	178,187.06	268,075.00	142,283.02	268,075.00	331,391.00	63,316.00	23.62%
001.6021.4110.000	UTILITY EXCISE TAX	790,982.67	721,171.00	388,626.90	721,171.00	907,171.00	186,000.00	25.79%
001.6021.4120.000	UTILITY FRANCHISE FEES	189,316.13	190,000.00	139,133.77	190,000.00	190,000.00	0.00	0.00%
001.6021.4140.000	HOTEL/MOTEL TAXES	486,551.89	480,000.00	475,887.36	600,000.00	600,000.00	0.00	0.00%
001.6021.4150.000	CURRENT MOBILE HOME TAXE	6,601.64	7,240.00	4,655.93	7,240.00	7,240.00	0.00	0.00%
001.6021.4151.000	DELIQ MOBILE HOME TAXES	397.83	0.00	524.46	800.00	0.00	-800.00	-100.00%
112.6021.4010.000	PROPERTY TAXES-CURRENT	2,308,587.95	2,674,253.00	1,425,712.14	2,674,253.00	1,980,772.00	-693,481.00	-25.93%
112.6021.4011.000	DELIQUENT PROPERTY TAXES	8,693.18	0.00	1,678.20	0.00	0.00	0.00	0.00%
112.6021.4110.000	UTILITY EXCISE TAX	279,638.78	258,239.00	139,291.00	258,239.00	242,432.00	-15,807.00	-6.12%
112.6021.4150.000	CURRENT MOBILE HOME TAXE	2,331.59	0.00	1,667.67	0.00	0.00	0.00	0.00%
112.6021.4151.000	DELIQ MOBILE HOME TAXES	137.30	0.00	186.64	0.00	0.00	0.00	0.00%
117.6021.4010.000	PROPERTY TAXES-CURRENT	1,036,187.64	1,095,799.00	583,232.76	1,095,799.00	840,503.00	-255,296.00	-23.30%
117.6021.4011.000	DELIQUENT PROPERTY TAXES	3,643.45	0.00	688.22	0.00	0.00	0.00	0.00%
117.6021.4110.000	UTILITY EXCISE TAX	125,634.82	105,819.00	56,893.51	105,819.00	102,875.00	-2,944.00	-2.78%
117.6021.4150.000	CURRENT MOBILE HOME TAXE	1,042.36	0.00	683.97	0.00	0.00	0.00	0.00%
117.6021.4151.000	DELIQ MOBILE HOME TAXES	60.11	0.00	77.00	0.00	0.00	0.00	0.00%
119.6021.4010.000	PROPERTY TAXES-CURRENT	203,589.22	227,998.00	121,505.18	227,998.00	223,538.00	-4,460.00	-1.96%
119.6021.4011.000	DELIQUENT PROPERTY TAXES	766.81	0.00	146.70	0.00	0.00	0.00	0.00%

Budget Comparison Report

Account Number		2021-2022 Total Activity	2022-2023 Total Budget	2022-2023 YTD Activity Through Feb	Parent Budget 2022-2023 FY2023 Amend	Comparison 1 Budget 2023-2024 FY2024 Dept Request	Comparison 1 to Parent Budget Increase / (Decrease)	%
119.6021.4110.000	UTILITY EXCISE TAX	24,661.13	22,016.00	11,864.46	22,016.00	27,359.00	5,343.00	24.27%
119.6021.4150.000	CURRENT MOBILE HOME TAXE	205.65	0.00	142.27	0.00	0.00	0.00	0.00%
119.6021.4151.000	DELIQ MOBILE HOME TAXES	12.27	0.00	16.07	0.00	0.00	0.00	0.00%
121.6021.4170.000	LOCAL OPTION TAXES	4,655,923.28	4,200,000.00	2,617,204.00	3,700,000.00	3,700,000.00	0.00	0.00%
125.6021.4091.000	PROP TAXES, TIF REG	831,641.82	485,255.00	276,837.80	485,255.00	1,114,341.00	629,086.00	129.64%
125.6021.4093.000	PROP TAXES, TIF DELINQUENT	4,379.38	0.00	1,055.62	0.00	0.00	0.00	0.00%
200.6021.4010.000	PROPERTY TAXES-CURRENT	815,065.35	718,605.00	384,966.67	718,605.00	2,080,282.00	1,361,677.00	189.49%
200.6021.4011.000	DELIQUENT PROPERTY TAXES	3,171.75	0.00	600.05	0.00	0.00	0.00	0.00%
200.6021.4110.000	UTILITY EXCISE TAX	95,861.43	68,334.00	36,825.95	68,334.00	245,692.00	177,358.00	259.55%
200.6021.4150.000	CURRENT MOBILE HOME TAXE	800.73	700.00	446.94	700.00	700.00	0.00	0.00%
200.6021.4151.000	DELIQ MOBILE HOME TAXES	48.72	0.00	53.30	0.00	0.00	0.00	0.00%
300.6021.4011.000	DELIQUENT PROPERTY TAXES	1,917.07	0.00	366.74	0.00	0.00	0.00	0.00%
300.6021.4085.000	PROP TAX CAPITAL IMPROVMI	508,972.23	569,994.00	303,762.29	569,994.00	558,845.00	-11,149.00	-1.96%
300.6021.4110.000	UTILITY EXCISE TAX	61,652.81	55,042.00	29,661.14	55,042.00	68,398.00	13,356.00	24.27%
300.6021.4150.000	CURRENT MOBILE HOME TAXE	514.13	0.00	367.42	0.00	0.00	0.00	0.00%
300.6021.4151.000	DELIQ MOBILE HOME TAXES	31.88	0.00	28.38	0.00	0.00	0.00	0.00%
	Total Category: 40 - TAXES:	**19,250,679.81**	**19,615,950.00**	**11,132,142.42**	**19,236,750.00**	**20,570,737.00**	**1,333,987.00**	**6.93%**

Budget Comparison Report

Account Number		2021-2022 Total Activity	2022-2023 Total Budget	2022-2023 YTD Activity Through Feb	Parent Budget 2022-2023 FY2023 Amend	Comparison 1 Budget 2023-2024 FY2024 Dept Request	Comparison 1 to Parent Budget Increase / (Decrease)	%
Category: 42 - LICENSES AND PERMITS								
001.1010.4292.000	BIKE LICENSE/REGISTRATN	75.00	100.00	60.00	100.00	100.00	0.00	0.00%
001.1050.4278.000	FIRE PERMITS & CONTRACTED	14,060.00	13,500.00	25,015.00	20,000.00	13,500.00	-6,500.00	-32.50%
001.1050.4280.000	ASSEMBLY PERMIT	100.00	0.00	0.00	0.00	0.00	0.00	0.00%
001.1070.4261.000	BUILDING PERMITS	113,058.00	175,000.00	99,974.49	175,000.00	175,000.00	0.00	0.00%
001.1070.4262.000	ELECTRICAL PERMITS	0.00	0.00	22,570.00	30,000.00	30,000.00	0.00	0.00%
001.1070.4263.000	MECHANICAL & GAS PERMITS	19,514.87	20,000.00	12,747.05	10,000.00	10,000.00	0.00	0.00%
001.1070.4264.000	PLAN REVIEW FEES	0.00	0.00	0.00	20,000.00	60,000.00	40,000.00	200.00%
001.1070.4265.000	PLUMBING PERMITS	15,021.13	7,500.00	6,002.75	10,000.00	10,000.00	0.00	0.00%
001.1070.4266.000	DEMOL,MOVING,ENCROACHM	525.00	100.00	225.00	100.00	200.00	100.00	100.00%
001.1070.4271.000	SEPTIC TANK INSTALLATION	0.00	0.00	0.00	0.00	0.00	0.00	0.00%
001.1072.4251.000	ELECTRICIAN LICENSES	4,920.00	3,000.00	1,225.00	1,000.00	1,000.00	0.00	0.00%
001.1072.4262.000	ELECTRICAL PERMITS	8,845.00	10,000.00	1,284.00	0.00	0.00	0.00	0.00%
001.2010.4267.000	STREET EXCAVATN/CURB CUT	912.00	400.00	662.00	700.00	400.00	-300.00	-42.86%
001.2010.4270.000	EXCAVATION PERMITS	3,576.00	2,500.00	2,447.00	2,500.00	2,500.00	0.00	0.00%
001.2010.4272.000	Public Works - Driveway Inspe	975.00	1,350.00	1,600.00	1,550.00	1,350.00	-200.00	-12.90%
001.2010.4276.000	Public Works - Driveway Exten	0.00	0.00	97.00	97.00	0.00	-97.00	-100.00%
001.2011.4272.000	SIDEWALK INSPECTION FEES	1,360.00	1,500.00	1,111.00	1,500.00	1,500.00	0.00	0.00%
001.2011.4275.000	NON STANDARD DRVWAY FEE	1,767.00	1,500.00	204.00	300.00	0.00	-300.00	-100.00%
001.2011.4276.000	DRIVEWAY EXTENSION PERMI	4,298.00	4,000.00	2,378.00	4,000.00	4,000.00	0.00	0.00%
001.2060.4267.000	STREET EXCVN/CURB CUT	0.00	0.00	26.00	0.00	0.00	0.00	0.00%
001.2060.4270.000	EXCAVATION PERMITS	0.00	0.00	270.00	0.00	0.00	0.00	0.00%
001.2060.4276.000	DRIVEWAY PERMIT	0.00	0.00	68.00	0.00	0.00	0.00	0.00%
001.2090.4277.000	GARBAGE LICENSES	100.00	0.00	0.00	0.00	0.00	0.00	0.00%
001.2900.4266.000	DEMOL,MOVING,ENCROACHM	50.00	100.00	100.00	100.00	100.00	0.00	0.00%
001.2900.4271.000	SEPTIC TANK INSTALLATION	0.00	0.00	59.00	59.00	0.00	-59.00	-100.00%
001.5040.4231.000	ZONING LIC/PERMITS	6,919.99	6,000.00	4,333.30	6,000.00	6,000.00	0.00	0.00%
001.6020.4212.000	LIQUOR LICENSES	55,986.26	32,000.00	19,530.32	32,000.00	32,000.00	0.00	0.00%
001.6020.4220.000	CIGARETTE PERMITS	3,450.00	3,100.00	0.00	3,100.00	3,100.00	0.00	0.00%
001.6020.4230.000	MISC BUSNESS LIC/PRMTS	3,642.00	1,600.00	3,620.00	3,800.00	3,800.00	0.00	0.00%
001.6021.4268.000	URBAN REVIT. PERMITS	2,250.00	1,000.00	6,700.00	6,100.00	4,000.00	-2,100.00	-34.43%
611.8015.4230.000	MISC BUSNESS LIC/PRMTS	1,700.00	3,400.00	2,475.00	1,725.00	1,700.00	-25.00	-1.45%
617.8016.4279.000	SEWER CONNECTION PERMIT	1,933.00	1,500.00	645.00	1,500.00	1,500.00	0.00	0.00%
740.8065.4230.000	MISC BUSNESS LIC/PRMTS	736.20	1,500.00	1,768.00	2,000.00	1,500.00	-500.00	-25.00%
740.8065.4233.000	CONST SITE EROSN/CON	0.00	1,500.00	0.00	0.00	0.00	0.00	0.00%
740.8068.4230.000	MISC BUSNESS LIC/PRMTS	0.00	0.00	124.00	124.00	0.00	-124.00	-100.00%
750.8070.4230.000	MISC BUSNESS LIC/PRMTS	15.00	500.00	0.00	500.00	500.00	0.00	0.00%
Total Category: 42 - LICENSES AND PERMITS:		**265,789.45**	**292,650.00**	**217,320.91**	**333,855.00**	**363,750.00**	**29,895.00**	**8.95%**

Budget Comparison Report

Account Number		2021-2022 Total Activity	2022-2023 Total Budget	2022-2023 YTD Activity Through Feb	Parent Budget 2022-2023 FY2023 Amend	Comparison 1 Budget 2023-2024 FY2024 Dept Request	Comparison 1 to Parent Budget Increase / (Decrease)	%
Category: 43 - INTERGOVERNMENTAL REVENUE								
001.1010.4326.000	STATE REIMB- IVH POLICE	39,147.00	39,147.00	39,147.00	39,147.00	39,147.00	0.00	0.00%
001.1010.4330.000	STATE OPER GRANT	0.00	2,775.00	0.00	2,775.00	2,775.00	0.00	0.00%
001.1050.4326.000	STATE REIM - IVH & FIRE MAR	62,761.44	58,158.00	62,661.44	62,661.00	58,158.00	-4,503.00	-7.19%
001.2010.4325.000	STATE PRIMARY ROAD EXTENS	0.00	40,907.00	44,215.71	44,216.00	44,216.00	0.00	0.00%
001.2080.4310.000	AIRPORT-FED OPER GRNT/REI	45,000.00	0.00	0.00	0.00	0.00	0.00	0.00%
001.4010.4330.000	STATE OPER GRANT	14,804.79	14,932.00	14,419.83	14,932.00	14,932.00	0.00	0.00%
001.4010.4332.000	AGED INCOME CREDIT	229.38	0.00	202.91	0.00	0.00	0.00	0.00%
001.4010.4333.000	DISABLED HOMESTEAD CREDI	705.72	0.00	332.49	0.00	0.00	0.00	0.00%
001.4010.4335.000	HOMESTEAD CREDIT	7,423.96	0.00	3,662.83	0.00	0.00	0.00	0.00%
001.4010.4336.000	MILITARY CREDIT	0.00	0.00	78.99	0.00	0.00	0.00	0.00%
001.4010.4337.000	MOBILE HOME CREDIT	0.00	0.00	0.48	0.00	0.00	0.00	0.00%
001.4010.4338.000	BUSINESS PROP TAX CREDIT	6,981.14	0.00	3,630.32	0.00	7,071.00	7,071.00	0.00%
001.4010.4339.000	SF295 BACKFILL	6,679.56	5,894.00	2,943.32	5,886.00	4,992.00	-894.00	-15.19%
001.4010.4350.000	LOCAL/COUNTY GRANTS	36,182.59	35,966.00	39,510.00	39,410.00	37,500.00	-1,910.00	-4.85%
001.4041.4350.000	LOCAL/COUNTY - COMM SCH	50,499.03	65,000.00	47,814.18	65,000.00	65,000.00	0.00	0.00%
001.6021.4331.000	AG LAND CREDIT	125.59	0.00	961.16	0.00	0.00	0.00	0.00%
001.6021.4332.000	AGED INCOME CREDIT	7,436.37	0.00	6,507.98	0.00	0.00	0.00	0.00%
001.6021.4333.000	DISABLED HOMESTEAD CREDI	22,635.48	0.00	10,891.12	0.00	0.00	0.00	0.00%
001.6021.4334.000	FAMILY FARM CREDIT	0.00	0.00	139.33	0.00	0.00	0.00	0.00%
001.6021.4335.000	HOMESTEAD CREDIT	238,116.54	0.00	119,978.01	0.00	0.00	0.00	0.00%
001.6021.4336.000	MILITARY CREDIT	2,785.15	0.00	2,587.35	0.00	0.00	0.00	0.00%
001.6021.4337.000	MOBILE HOME CREDIT	0.00	0.00	15.64	0.00	0.00	0.00	0.00%
001.6021.4338.000	BUSINESS PROP TAX CREDIT	223,912.74	0.00	118,912.50	0.00	234,935.00	234,935.00	0.00%
001.6021.4339.000	SF295 BACKFILL	214,239.35	193,048.00	96,610.73	193,048.00	165,536.00	-27,512.00	-14.25%
001.6021.4361.000	MONEYS AND CREDITS ON CR	14,179.32	14,180.00	16,721.94	16,722.00	14,180.00	-2,542.00	-15.20%
110.2010.4320.000	STATE ROAD USE TAXES	3,813,251.23	3,490,000.00	2,536,488.85	3,490,000.00	3,490,000.00	0.00	0.00%
112.6021.4332.000	AGED INCOME CREDIT	2,604.62	0.00	2,300.78	0.00	0.00	0.00	0.00%
112.6021.4333.000	DISABLED HOMESTEAD CREDI	8,002.40	0.00	3,903.58	0.00	0.00	0.00	0.00%
112.6021.4335.000	HOMESTEAD CREDIT	84,182.16	0.00	43,002.31	0.00	0.00	0.00	0.00%
112.6021.4336.000	MILITARY CREDIT	954.88	0.00	927.35	0.00	0.00	0.00	0.00%
112.6021.4337.000	MOBILE HOME CREDIT	0.00	0.00	5.61	0.00	0.00	0.00	0.00%
112.6021.4338.000	BUSINESS PROP TAX CREDIT	79,160.70	0.00	42,620.41	0.00	62,780.00	62,780.00	0.00%
112.6021.4339.000	SF295 BACKFILL	75,740.81	69,131.00	34,523.14	69,131.00	44,237.00	-24,894.00	-36.01%
117.6021.4332.000	AGED INCOME CREDIT	1,085.72	0.00	1,033.69	0.00	0.00	0.00	0.00%
117.6021.4333.000	DISABLED HOMESTEAD CREDI	3,595.28	0.00	1,594.42	0.00	0.00	0.00	0.00%
117.6021.4335.000	HOMESTEAD CREDIT	37,820.97	0.00	17,564.32	0.00	0.00	0.00	0.00%
117.6021.4336.000	MILITARY CREDIT	429.00	0.00	378.78	0.00	0.00	0.00	0.00%
117.6021.4337.000	MOBILE HOME CREDIT	0.00	0.00	2.29	0.00	0.00	0.00	0.00%

Budget Comparison Report

Account Number		2021-2022 Total Activity	2022-2023 Total Budget	2022-2023 YTD Activity Through Feb	Parent Budget 2022-2023 FY2023 Amend	Comparison 1 Budget 2023-2024 FY2024 Dept Request	Comparison 1 to Parent Budget Increase / (Decrease)	%
117.6021.4338.000	BUSINESS PROP TAX CREDIT	35,564.94	0.00	17,408.34	0.00	26,639.00	26,639.00	0.00%
117.6021.4339.000	SF295 BACKFILL	34,028.48	28,327.00	14,146.20	28,327.00	18,771.00	-9,556.00	-33.73%
119.6021.4332.000	AGED INCOME CREDIT	229.38	0.00	202.91	0.00	0.00	0.00	0.00%
119.6021.4333.000	DISABLED HOMESTEAD CREDI	705.72	0.00	332.49	0.00	0.00	0.00	0.00%
119.6021.4335.000	HOMESTEAD CREDIT	7,423.96	0.00	3,662.83	0.00	0.00	0.00	0.00%
119.6021.4336.000	MILITARY CREDIT	84.21	0.00	78.99	0.00	0.00	0.00	0.00%
119.6021.4337.000	MOBILE HOME CREDIT	0.00	0.00	0.48	0.00	0.00	0.00	0.00%
119.6021.4338.000	BUSINESS PROP TAX CREDIT	6,981.14	0.00	3,630.32	0.00	7,085.00	7,085.00	0.00%
119.6021.4339.000	SF295 BACKFILL	6,679.56	5,894.00	2,943.32	5,894.00	4,992.00	-902.00	-15.30%
125.6021.4332.000	AGED INCOME CREDIT	503.83	0.00	898.05	0.00	0.00	0.00	0.00%
125.6021.4333.000	DISABLED HOMESTEAD CREDI	222.04	0.00	137.99	0.00	0.00	0.00	0.00%
125.6021.4335.000	HOMESTEAD CREDIT	9,712.51	0.00	2,320.17	0.00	0.00	0.00	0.00%
125.6021.4338.000	BUSINESS PROP TAX CREDIT	75,663.21	0.00	16,087.84	0.00	0.00	0.00	0.00%
132.2040.4330.000	STATE OPERATING GRANT	0.00	0.00	0.00	0.00	60,000.00	60,000.00	0.00%
132.4030.4310.000	P&R FED OPER GRNT	0.00	0.00	1,302.00	62,362.00	0.00	-62,362.00	-100.00%
132.4030.4330.000	STATE OPER GRANT	0.00	66,250.00	0.00	0.00	0.00	0.00	0.00%
132.4030.4350.000	LOCAL GRANTS	28,000.00	0.00	0.00	0.00	0.00	0.00	0.00%
132.5010.4350.000	LOCAL/COUNTY GRANTS	10,000.00	0.00	0.00	0.00	0.00	0.00	0.00%
132.5020.4310.000	FED OPER GRANT	158,736.00	1,568,000.00	112,533.00	703,214.00	1,058,360.00	355,146.00	50.50%
132.5020.4330.000	STATE OPER GRANT	350,000.00	1,080,646.00	0.00	632,832.00	620,000.00	-12,832.00	-2.03%
132.5020.4350.000	LOCAL/COUNTY GRANTS	0.00	200,000.00	0.00	0.00	200,000.00	200,000.00	0.00%
133.2900.4310.000	FEDERAL OPERATING GRANT	0.00	200,000.00	100,612.34	150,000.00	150,000.00	0.00	0.00%
133.4065.4310.000	FED OPER GRANT	0.00	0.00	0.00	0.00	135,000.00	135,000.00	0.00%
145.2010.4310.000	FEMA - FEDERAL GRANT REIM	0.00	0.00	63,396.56	63,397.00	0.00	-63,397.00	-100.00%
145.2060.4310.000	FEMA - FEDERAL GRANT	100,574.16	0.00	0.00	0.00	0.00	0.00	0.00%
145.2060.4330.000	STATE OPER GRANT	37,376.53	0.00	0.00	0.00	0.00	0.00	0.00%
145.6900.4310.000	FEMA - FEDERAL GRANT REIM	47,921.45	0.00	0.00	0.00	0.00	0.00	0.00%
146.5900.4310.000	FED OPER GRANT	55,164.71	0.00	0.00	0.00	0.00	0.00	0.00%
147.1075.4310.000	FED OPER GRANT	16,074.93	0.00	0.00	0.00	0.00	0.00	0.00%
148.6050.4310.000	FED OPERATING GRANT	10,556.73	7,500.00	8,121.47	8,122.00	12,435.00	4,313.00	53.10%
148.6050.4330.000	STATE OPER GRANT	0.00	1,000.00	0.00	0.00	1,000.00	1,000.00	0.00%
149.1010.4310.000	FEMA - FEDERAL GRANT REIM	2,278.85	0.00	0.00	0.00	0.00	0.00	0.00%
149.1010.4330.000	STATE OPER GRANT	0.00	0.00	0.00	0.00	0.00	0.00	0.00%
149.1050.4310.000	FEMA - FEDERAL GRANT REIM	8,650.87	0.00	0.00	0.00	0.00	0.00	0.00%
149.1099.4310.000	FEMA - FEDERAL GRANT REIM	8,821.33	0.00	0.00	0.00	0.00	0.00	0.00%
149.2010.4310.000	FEMA - FEDERAL GRANT REIM	42,446.43	0.00	3,310,009.85	4,413,347.00	0.00	-4,413,347.00	-100.00%
149.2010.4330.000	STATE OPER GRANT	0.00	0.00	0.00	505,179.00	0.00	-505,179.00	-100.00%
149.2900.4310.600	FEMA - FEDERAL GRANT REIM	5,333.58	0.00	88,717.07	88,717.00	0.00	-88,717.00	-100.00%
149.2900.4330.600	STATE OPER GRANT	0.00	0.00	0.00	9,858.00	0.00	-9,858.00	-100.00%

Budget Comparison Report

Account Number		2021-2022 Total Activity	2022-2023 Total Budget	2022-2023 YTD Activity Through Feb	Parent Budget 2022-2023 FY2023 Amend	Comparison 1 Budget 2023-2024 FY2024 Dept Request	Comparison 1 to Parent Budget Increase / (Decrease)	%
149.6050.4310.000	FEMA - FEDERAL GRANT REIM	3,312.58	0.00	0.00	0.00	0.00	0.00	0.00%
149.6051.4310.000	FEMA - FEDERAL GRANT REIM	4,708.80	0.00	0.00	0.00	0.00	0.00	0.00%
149.6900.4310.000	FEMA - FEDERAL GRANT REIM	0.00	0.00	0.00	0.00	58,500.00	58,500.00	0.00%
149.6900.4330.000	STATE OPER GRANT	0.00	0.00	0.00	0.00	6,500.00	6,500.00	0.00%
149.8016.4310.000	FEMA - FEDERAL GRANT REIM	55,588.48	0.00	0.00	0.00	0.00	0.00	0.00%
149.8065.4310.000	FEMA - FEDERAL GRANT REIM	2,130.14	0.00	0.00	0.00	0.00	0.00	0.00%
150.1010.4350.000	LOCAL/COUNTY GRANTS	41,967.92	55,000.00	38,656.12	55,000.00	60,000.00	5,000.00	9.09%
151.1010.4310.000	POLICE FED OPER GRNT/REIM	15,971.19	109,560.00	37,290.12	142,250.00	40,560.00	-101,690.00	-71.49%
151.1010.4315.000	POLICE FED CAP GRT	15,146.51	16,240.00	16,240.00	16,240.00	16,240.00	0.00	0.00%
152.1010.4310.000	POLICE FED OPER GRNT/REIM	83,571.05	91,979.00	66,831.20	121,205.00	89,507.00	-31,698.00	-26.15%
152.1010.4326.000	STATE REIMB	19,468.19	20,000.00	21,665.47	21,666.00	20,000.00	-1,666.00	-7.69%
170.4010.4315.000	FED CAP GRANT	0.00	0.00	5,000.00	5,000.00	0.00	-5,000.00	-100.00%
184.5030.4311.000	HOUSING-FED OPER GRANT	985,896.00	1,043,000.00	717,458.00	1,043,000.00	1,043,000.00	0.00	0.00%
184.5030.4312.000	FED HSNG-ADMIN-HUD	271,931.00	200,000.00	163,668.00	200,000.00	200,000.00	0.00	0.00%
189.3040.4310.000	COMM HLTH FED OPER GRNT	536,880.08	1,605,541.99	371,862.34	1,605,542.00	1,582,850.00	-22,692.00	-1.41%
200.6021.4332.000	AGED INCOME CREDIT	925.33	0.00	814.04	0.00	0.00	0.00	0.00%
200.6021.4333.000	DISABLED HOMESTEAD CREDI	2,749.52	0.00	1,035.15	0.00	0.00	0.00	0.00%
200.6021.4335.000	HOMESTEAD CREDIT	29,131.88	0.00	11,421.41	0.00	0.00	0.00	0.00%
200.6021.4336.000	MILITARY CREDIT	327.33	0.00	245.18	0.00	0.00	0.00	0.00%
200.6021.4337.000	MOBILE HOME CREDIT	0.00	0.00	1.48	0.00	0.00	0.00	0.00%
200.6021.4338.000	BUSINESS PROP TAX CREDIT	29,269.94	0.00	11,631.36	0.00	50,355.00	50,355.00	0.00%
200.6021.4339.000	SF295 BACKFILL	28,149.26	18,551.00	9,264.34	18,551.00	36,629.00	18,078.00	97.45%
300.6021.4332.000	AGED INCOME CREDIT	572.25	0.00	507.26	0.00	0.00	0.00	0.00%
300.6021.4333.000	DISABLED HOMESTEAD CREDI	1,764.30	0.00	831.24	0.00	0.00	0.00	0.00%
300.6021.4335.000	HOMESTEAD CREDIT	18,559.90	0.00	9,157.07	0.00	0.00	0.00	0.00%
300.6021.4336.000	MILITARY CREDIT	210.53	0.00	197.47	0.00	0.00	0.00	0.00%
300.6021.4337.000	MOBILE HOME CREDIT	0.00	0.00	1.19	0.00	0.00	0.00	0.00%
300.6021.4338.000	BUSINESS PROP TAX CREDIT	17,452.80	0.00	9,075.75	0.00	17,712.00	17,712.00	0.00%
300.6021.4339.000	SF295 BACKFILL	16,698.84	14,734.00	7,358.32	14,734.00	12,481.00	-2,253.00	-15.29%
311.2012.4315.000	FED CAP GRANT	0.00	956,849.00	0.00	2,956,849.00	0.00	-2,956,849.00	-100.00%
311.2012.4330.000	STATE OPER GRANT	0.00	1,640,342.00	0.00	1,640,342.00	0.00	-1,640,342.00	-100.00%
312.2080.4315.000	AIRPORT-FED CAP GRANT	549,258.00	166,666.00	211,670.00	211,670.00	150,000.00	-61,670.00	-29.13%
312.2080.4330.000	STATE OPER GRANT	140,807.00	0.00	253,548.00	395,865.00	0.00	-395,865.00	-100.00%
340.4030.4315.000	P/R-FED CAP GRT	0.00	240,000.00	0.00	0.00	797,000.00	797,000.00	0.00%
340.4030.4330.000	STATE OPER GRANT	141,992.84	60,000.00	0.00	90,544.00	193,424.00	102,880.00	113.62%
340.4030.4350.000	LOCAL/COUNTY GRANTS	6,166.69	60,254.00	0.00	30,181.00	594,391.00	564,210.00	1,869.42%
355.1075.4330.000	STATE OPER GRANT	24,999.00	0.00	0.00	0.00	0.00	0.00	0.00%
363.2012.4350.000	LOCAL GRANTS	125,000.00	600,000.00	25,000.00	525,000.00	0.00	-525,000.00	-100.00%
364.4030.4350.000	LOCAL/COUNTY GRANTS	0.00	0.00	0.00	200,000.00	0.00	-200,000.00	-100.00%

Budget Comparison Report

Account Number		2021-2022 Total Activity	2022-2023 Total Budget	2022-2023 YTD Activity Through Feb	Parent Budget 2022-2023 FY2023 Amend	Comparison 1 Budget 2023-2024 FY2024 Dept Request	Comparison 1 to Parent Budget Increase / (Decrease)	%
381.2020.4326.000	STATE REIMB	100,000.00	0.00	0.00	0.00	0.00	0.00	0.00%
389.6021.4315.000	FEDERAL CAPITAL GRANT	1,993,589.42	1,986,933.00	1,993,589.41	1,993,590.00	0.00	-1,993,590.00	-100.00%
611.8015.4310.000	WPCP FED OPER GRT/REIMB	0.00	96.00	0.00	0.00	0.00	0.00	0.00%
618.8015.4310.000	FED OPER GRANT	580.97	0.00	0.00	0.00	0.00	0.00	0.00%
690.8050.4310.000	BUS-FED SEC 18 OPER ASST	490,734.00	411,603.00	508,866.00	678,338.00	350,163.00	-328,175.00	-48.38%
690.8050.4330.000	STATE OPER GRANT	215,370.95	184,810.00	168,662.62	197,650.00	245,139.00	47,489.00	24.03%
740.8065.4310.000	STRM SWR FED GRNT/REIM	824,198.55	0.00	0.00	0.00	0.00	0.00	0.00%
742.8065.4310.000	FEMA - FEDERAL GRANT REIM	898.25	0.00	0.00	0.00	0.00	0.00	0.00%
750.8070.4310.000	FED OPER GRANT	756.56	0.00	0.00	0.00	0.00	0.00	0.00%
Total Category: 43 - INTERGOVERNMENTAL REVENUE:		**12,957,143.52**	**16,668,913.99**	**11,724,381.55**	**22,877,394.00**	**12,144,192.00**	**-10,733,202.00**	**-46.92%**

Budget Comparison Report

Account Number		2021-2022 Total Activity	2022-2023 Total Budget	2022-2023 YTD Activity Through Feb	Parent Budget 2022-2023 FY2023 Amend	Comparison 1 Budget 2023-2024 FY2024 Dept Request	Comparison 1 to Parent Budget Increase / (Decrease)	%
Category: 44 - CHARGES FOR SERVICE								
001.1010.4410.000	POLICE SERVICES	8,442.31	7,000.00	6,337.28	7,000.00	7,000.00	0.00	0.00%
001.1010.4411.000	POLICE SECURITY SERVICES	18,522.50	12,000.00	8,592.50	12,000.00	12,000.00	0.00	0.00%
001.1010.4412.000	Police - False Alarm	3,110.67	3,000.00	1,973.80	3,000.00	3,000.00	0.00	0.00%
001.1010.4494.000	COURT ORDER-CHRG FOR SER\	0.00	0.00	183.00	0.00	0.00	0.00	0.00%
001.1010.4498.000	Police - Towing Admin Fee	196.00	500.00	250.00	500.00	500.00	0.00	0.00%
001.1010.4510.000	COURT FINES	17,581.73	20,000.00	14,804.38	20,000.00	20,000.00	0.00	0.00%
001.1010.4515.000	COURT ORDERED-RESTITUTIOI	7,811.14	4,000.00	3,109.99	4,000.00	4,000.00	0.00	0.00%
001.1011.4410.000	Police Services ATE	0.00	0.00	0.00	0.00	10,000.00	10,000.00	0.00%
001.1050.4414.000	FIRE SERVICES/TESTING/INSPE	13,590.77	13,500.00	14,577.61	13,500.00	30,000.00	16,500.00	122.22%
001.1050.4415.000	FIRE-LEAD TESTING/INSPECTN	0.00	0.00	10.00	0.00	0.00	0.00	0.00%
001.1050.4416.000	FIRE-PLAN REV FEES	5,175.00	4,500.00	865.00	4,500.00	4,500.00	0.00	0.00%
001.1050.4492.000	FIRE MISC CHRGS	0.00	200.00	300.00	200.00	200.00	0.00	0.00%
001.1050.4499.000	FIRE- ILLEGAL BURNING	2,120.00	1,000.00	1,390.00	1,200.00	1,000.00	-200.00	-16.67%
001.1071.4420.000	RENTAL HOUSING INSPECTION	705.00	100,000.00	525.00	62,500.00	150,000.00	87,500.00	140.00%
001.1071.4421.000	REGISTRATION FEES/RENTALS	99,990.17	50,000.00	5,834.74	10,000.00	50,865.00	40,865.00	408.65%
001.1071.4422.000	RENTAL APPLICATION FEE	7,800.00	2,000.00	1,100.00	2,000.00	2,000.00	0.00	0.00%
001.1071.4423.000	RENTAL HOUSING ADMINISTR.	0.00	10,000.00	0.00	0.00	0.00	0.00	0.00%
001.1075.4492.000	NUISANCE MISC CHRGS	23,216.90	30,000.00	14,272.56	25,000.00	25,000.00	0.00	0.00%
001.2010.4492.000	STREET MISC CHRGS	229.14	0.00	0.00	0.00	0.00	0.00	0.00%
001.2020.4492.000	MISC CHARGES	0.00	0.00	170.03	350.00	600.00	250.00	71.43%
001.2020.4520.000	ADM - Parking Violations	48,757.11	75,000.00	33,683.81	75,000.00	75,000.00	0.00	0.00%
001.2060.4487.000	ENGINEERING SERVICES	1,041.00	800.00	1,376.00	1,400.00	800.00	-600.00	-42.86%
001.2080.4453.000	AIRPORT SERVICES & USES	5,561.64	6,000.00	6,181.92	6,500.00	6,500.00	0.00	0.00%
001.2080.4492.000	AIRPORT MISC CHRGS	0.00	0.00	500.00	500.00	500.00	0.00	0.00%
001.2090.4446.000	SOLID WASTE FEES	147,660.31	150,000.00	98,917.61	150,000.00	150,000.00	0.00	0.00%
001.2900.4491.000	MAPS/BLUE PRTS/SALES/CHR(	11.00	14.00	4.00	14.00	14.00	0.00	0.00%
001.2900.4492.000	PUBLIC WORKS MISC. CHARGE	1,449.84	1,500.00	139.00	200.00	200.00	0.00	0.00%
001.4010.4493.000	LIBRARY BOOK CHRGS	8,267.79	7,100.00	2,389.29	7,100.00	8,280.00	1,180.00	16.62%
001.4010.4550.000	LIBRARY FINES	1,842.23	400.00	542.80	400.00	660.00	260.00	65.00%
001.4030.4472.000	PARK FEES & RENTALS	68,631.66	60,000.00	51,467.48	68,000.00	68,000.00	0.00	0.00%
001.4030.4473.000	RECREATION FEES	-7.21	0.00	0.00	0.00	0.00	0.00	0.00%
001.4030.4492.000	P&R MISC CHRGS	0.00	0.00	60.00	0.00	0.00	0.00	0.00%
001.4030.4540.000	PENALTIES/DELIQUENT	8.95	0.00	0.00	0.00	0.00	0.00	0.00%
001.4040.4470.000	GIFT CERTIFICATES	1,135.29	250.00	2,500.00	250.00	250.00	0.00	0.00%
001.4040.4472.000	PARK FEES & RENTALS	10.00	0.00	10.00	0.00	0.00	0.00	0.00%
001.4040.4473.000	RECREATION FEES	17,043.24	12,000.00	11,911.63	17,000.00	20,000.00	3,000.00	17.65%
001.4041.4479.000	YOUTH REC FEES	130,412.65	149,500.00	73,337.93	157,500.00	180,000.00	22,500.00	14.29%
001.4045.4474.002	AQUATIC CTR FEES, DAILY	62,076.35	80,000.00	24,304.44	80,000.00	80,000.00	0.00	0.00%

Budget Comparison Report

Account Number		2021-2022 Total Activity	2022-2023 Total Budget	2022-2023 YTD Activity Through Feb	Parent Budget 2022-2023 FY2023 Amend	Comparison 1 Budget 2023-2024 FY2024 Dept Request	Comparison 1 to Parent Budget Increase / (Decrease)	%
001.4045.4474.004	AQUATIC POOL PASS	12,907.90	29,000.00	193.21	29,000.00	29,000.00	0.00	0.00%
001.4045.4474.005	AQUATIC SCAN CARD	4,120.00	8,000.00	2,320.00	8,000.00	8,000.00	0.00	0.00%
001.4045.4474.006	AQUATIC SWIM TICKETS	2,753.73	4,000.00	378.52	4,000.00	4,000.00	0.00	0.00%
001.4045.4474.008	SWIMMING LESSON FEES	9,802.54	15,000.00	3,333.00	15,000.00	15,000.00	0.00	0.00%
001.4045.4474.009	AQUATIC POOL RENTALS	0.00	5,000.00	0.00	0.00	0.00	0.00	0.00%
001.4065.4472.000	FEES & RENTALS	19,437.76	20,000.00	16,006.02	20,000.00	20,000.00	0.00	0.00%
001.4065.4483.000	CONCESSIONS	10.00	0.00	0.00	0.00	0.00	0.00	0.00%
001.4066.4483.000	CONCESSIONS	12,600.25	14,000.00	17,943.15	16,000.00	16,000.00	0.00	0.00%
001.6012.4492.000	CITY ADM MISC CHRGS	0.00	1.00	0.00	0.00	0.00	0.00	0.00%
001.6020.4492.000	CITY CLERK MISC CHRGS	4,887.10	5,000.00	1,876.37	5,000.00	5,000.00	0.00	0.00%
001.6021.4490.000	ACCOUNTING SERVICES	110,008.00	137,308.00	91,774.80	137,674.00	142,935.00	5,261.00	3.82%
001.6021.4492.000	FINANCE MISC CHARGES	6,092.79	2,000.00	1,793.19	2,000.00	2,000.00	0.00	0.00%
001.6021.4540.000	PENALTIES/DELIQUENT	2,427.00	2,000.00	860.00	2,000.00	2,000.00	0.00	0.00%
001.6025.4492.000	PERSONNEL MISC CHRGS	15,000.00	15,000.00	7,500.00	15,000.00	25,000.00	10,000.00	66.67%
184.5030.4492.000	HOUSING MISC CHRGS	0.00	25.00	0.00	25.00	25.00	0.00	0.00%
189.3040.4500.000	FINES-COMMUNITY HEALTH	1,700.00	0.00	1,800.00	1,800.00	0.00	-1,800.00	-100.00%
383.4065.4483.002	CONCESSIONS/COINS - OTHER	110.00	0.00	0.00	0.00	0.00	0.00	0.00%
611.8015.4440.000	JBS SEWER CHARGES	2,390,513.57	2,320,000.00	1,741,481.38	2,320,000.00	2,320,000.00	0.00	0.00%
611.8015.4441.000	SEWER FEES	5,411,841.22	5,600,000.00	3,676,046.47	5,500,000.00	5,550,000.00	50,000.00	0.91%
611.8015.4442.000	SEWER CONNECTION CHARGE	4,812.00	4,000.00	300.00	4,000.00	4,000.00	0.00	0.00%
611.8015.4443.000	LAB TESTING FEES	41,851.00	49,000.00	30,921.00	42,000.00	42,000.00	0.00	0.00%
611.8015.4444.000	REFUSE HAULING & DUMPING	60,598.99	75,000.00	46,385.72	75,000.00	75,000.00	0.00	0.00%
617.8016.4442.000	SEWER CONNECTION CHARGE	6,300.00	14,000.00	3,956.36	7,000.00	7,000.00	0.00	0.00%
650.8040.4448.000	URBAN TREE FEE	0.00	123,444.00	0.00	0.00	0.00	0.00	0.00%
690.8050.4460.000	BUS FARE BOX	30,199.69	25,000.00	20,673.09	30,000.00	30,000.00	0.00	0.00%
690.8050.4462.000	BUS SHELTERED WORK SHOPS	37,452.00	75,000.00	33,996.76	50,000.00	55,000.00	5,000.00	10.00%
690.8050.4464.000	BUS REVENUE PASSES	26,495.00	21,000.00	21,875.00	35,000.00	35,000.00	0.00	0.00%
690.8050.4465.000	BUS REV PASSES-STUDNT	6,560.00	1,500.00	3,480.00	3,140.00	3,000.00	-140.00	-4.46%
690.8050.4466.000	BUS TICKETS	3,040.00	2,500.00	4,165.50	3,080.00	3,000.00	-80.00	-2.60%
690.8050.4467.000	ADVERTISING ON BUSES	19,132.00	4,000.00	1,925.00	3,300.00	3,300.00	0.00	0.00%
740.8065.4430.000	STORM SEWER CHARGES	1,350,091.66	1,350,000.00	893,396.26	1,350,000.00	1,350,000.00	0.00	0.00%
740.8065.4492.000	STORM SWR MISC CHRGS	1,160.32	0.00	700.00	700.00	0.00	-700.00	-100.00%
750.8070.4481.000	GATE FEE: TREE DISPOSAL	87,931.00	50,000.00	49,717.72	65,000.00	65,000.00	0.00	0.00%
750.8070.4485.000	SALE OF FIREWOOD	0.00	500.00	0.00	0.00	0.00	0.00	0.00%
750.8070.4486.000	SALE OF COMPOST	9,895.00	4,000.00	1,646.00	4,000.00	4,000.00	0.00	0.00%
750.8070.4487.000	SALE OF CHIPS/MULCH	3,327.00	3,500.00	1,317.00	1,017.00	0.00	-1,017.00	-100.00%
750.8070.4492.000	STREET MISC CHRGS	3,510.00	1,000.00	520.00	1,000.00	1,000.00	0.00	0.00%
760.8080.4483.000	CONCESSIONS	41,743.02	41,000.00	13,273.66	46,000.00	48,000.00	2,000.00	4.35%
	Total Category: 44 - CHARGES FOR SERVICE:	**10,440,703.72**	**10,821,042.00**	**7,073,176.98**	**10,525,350.00**	**10,775,129.00**	**249,779.00**	**2.37%**

Budget Comparison Report

Account Number		2021-2022 Total Activity	2022-2023 Total Budget	2022-2023 YTD Activity Through Feb	Parent Budget 2022-2023 FY2023 Amend	Comparison 1 Budget 2023-2024 FY2024 Dept Request	Comparison 1 to Parent Budget Increase / (Decrease)	%
Category: 46 - USE OF MONEY & PROPERTY								
001.1010.4616.000	INT CHRGD - ACCTS REC	640.19	0.00	450.23	150.00	0.00	-150.00	-100.00%
001.1050.4616.000	INT CHRGD - ACCTS REC	434.19	0.00	604.81	250.00	0.00	-250.00	-100.00%
001.1070.4616.000	INT CHRGD - ACCTS REC	105.04	0.00	47.18	0.00	0.00	0.00	0.00%
001.1071.4616.000	INT CHRGE - ACCS REC	6,251.38	2,000.00	1,961.32	2,500.00	2,000.00	-500.00	-20.00%
001.1072.4616.000	INT CHRGD - ACCTS REC	45.03	0.00	11.16	20.00	0.00	-20.00	-100.00%
001.1099.4620.000	RENTS - Police/Fire Building	0.00	0.00	0.00	0.00	6,000.00	6,000.00	0.00%
001.2010.4616.000	INT CHRGD - ACCTS REC	13.21	0.00	19.97	15.00	10.00	-5.00	-33.33%
001.2011.4616.000	INT CHRGD - ACCTS REC	2.67	0.00	3.92	4.00	0.00	-4.00	-100.00%
001.2020.4620.000	ADM - Parking Lease	1,200.00	1,200.00	1,200.00	1,200.00	1,200.00	0.00	0.00%
001.2080.4622.000	ADM - Rent - Farm - Airport	21,256.45	20,700.00	5,984.10	26,093.00	23,442.00	-2,651.00	-10.16%
001.2080.4623.000	AIRPORT RENTAL	27,823.06	28,000.00	19,064.00	28,000.00	28,000.00	0.00	0.00%
001.2900.4616.000	INT CHRGD - ACCTS REC	3.61	0.00	10.52	10.00	0.00	-10.00	-100.00%
001.4030.4616.000	INT CHRGD - ACCS REC	-3.45	0.00	10.36	0.00	0.00	0.00	0.00%
001.5900.4620.000	RENTS	1,800.00	2,000.00	1,500.00	2,000.00	2,000.00	0.00	0.00%
001.6020.4616.000	INT CHRGD - ACCTS REC	2,439.29	3,000.00	789.13	3,000.00	3,000.00	0.00	0.00%
001.6021.4610.000	INTEREST ON INVESTMENTS	118,868.09	114,000.00	82,849.29	119,000.00	119,001.00	1.00	0.00%
001.6021.4616.000	INT CHRGD - ACCTS REC	3,505.75	3,003.00	0.00	3,003.00	3,003.00	0.00	0.00%
001.6900.4620.000	RENTS	6.00	0.00	0.00	0.00	0.00	0.00	0.00%
001.8016.4616.000	INT CHRGD - ACCTS REC	14.38	0.00	0.94	0.00	0.00	0.00	0.00%
010.6021.4610.000	INTEREST ON INVESTMENTS	22,088.96	23,000.00	35,446.96	55,000.00	60,000.00	5,000.00	9.09%
030.6021.4610.000	INTEREST ON INVESTMENTS	0.00	0.00	13.09	0.00	0.00	0.00	0.00%
031.6021.4610.000	INTEREST ON INVESTMENTS	2,941.22	1,500.00	3,079.67	5,000.00	3,000.00	-2,000.00	-40.00%
110.6021.4610.000	INTEREST ON INVESTMENTS	0.00	0.00	83,937.56	100,000.00	90,000.00	-10,000.00	-10.00%
117.6021.4610.000	INTEREST ON INVESTMENTS	5,783.57	5,000.00	8,280.14	5,000.00	5,000.00	0.00	0.00%
121.6021.4610.000	INTEREST ON INVESTMENTS	56,659.73	34,000.00	95,307.06	100,000.00	100,000.00	0.00	0.00%
125.6021.4610.000	INTEREST ON INVESTMENTS	5,457.56	2,772.00	6,975.14	6,000.00	200.00	-5,800.00	-96.67%
126.6021.4610.000	INTEREST ON INVESTMENTS	152.00	0.00	0.00	0.00	0.00	0.00	0.00%
130.2010.4616.000	INT CHRGD - ACCTS REC	5.37	0.00	17.16	20.00	0.00	-20.00	-100.00%
130.6021.4610.000	INTEREST ON INVESTMENTS	2,977.76	1,000.00	2,006.21	2,000.00	1,000.00	-1,000.00	-50.00%
140.6021.4610.000	INTEREST ON INVESTMENTS	1,587.71	900.00	3,847.75	5,000.00	2,000.00	-3,000.00	-60.00%
141.6021.4610.000	INTEREST ON INVESTMENTS	26.59	20.00	35.27	50.00	20.00	-30.00	-60.00%
144.6021.4610.000	INTEREST ON INVESTMENTS	57.74	40.00	76.59	100.00	100.00	0.00	0.00%
153.6021.4610.000	INTEREST ON INVESTMENTS	651.94	700.00	844.97	1,200.00	1,200.00	0.00	0.00%
156.6021.4610.000	INTEREST ON INVESTMENTS	657.91	0.00	704.56	1,000.00	1,000.00	0.00	0.00%
157.6021.4610.000	INTEREST ON INVESTMENTS	42.40	60.00	0.00	0.00	0.00	0.00	0.00%
160.6021.4610.000	INTEREST ON INVESTMENTS	505.62	350.00	670.59	900.00	1,000.00	100.00	11.11%
161.6021.4610.000	INTEREST ON INVESTMENTS	105.50	185.00	139.89	185.00	185.00	0.00	0.00%
170.6021.4610.000	INTEREST ON INVESTMENTS	1,137.27	1,300.00	1,625.50	2,400.00	2,400.00	0.00	0.00%

Budget Comparison Report

Account Number		2021-2022 Total Activity	2022-2023 Total Budget	2022-2023 YTD Activity Through Feb	Parent Budget 2022-2023 FY2023 Amend	Comparison 1 Budget 2023-2024 FY2024 Dept Request	Comparison 1 to Parent Budget Increase / (Decrease)	%
177.6021.4610.000	INTEREST ON INVESTMENTS	369.97	250.00	330.42	500.00	500.00	0.00	0.00%
179.6021.4610.000	INTEREST ON INVESTMENTS	681.40	0.00	0.00	0.00	0.00	0.00	0.00%
180.6021.4610.000	INTEREST ON INVESTMENTS	239.59	0.00	0.00	0.00	0.00	0.00	0.00%
184.5030.4611.000	HUD INTEREST-ADMIN	1,521.99	300.00	2,353.68	3,200.00	3,200.00	0.00	0.00%
184.5030.4612.000	HUD INTEREST - HAP	78.67	150.00	444.22	600.00	600.00	0.00	0.00%
189.6021.4610.000	INTEREST REV.	21.43	0.00	220.73	400.00	0.00	-400.00	-100.00%
200.6021.4610.000	INTEREST ON INVESTMENTS	13,558.30	5,500.00	14,069.69	16,000.00	5,500.00	-10,500.00	-65.63%
300.6021.4610.000	INTEREST ON INVESTMENTS	4,868.94	1,000.00	7,178.72	10,000.00	6,000.00	-4,000.00	-40.00%
310.6021.4610.000	INTEREST ON INVESTMENTS	-30.42	0.00	0.00	0.00	0.00	0.00	0.00%
312.6021.4610.000	INTEREST ON INVESTMENTS	5,375.27	0.00	1,565.01	1,500.00	0.00	-1,500.00	-100.00%
341.6021.4610.000	INTEREST ON INVESTMENTS	238.46	0.00	515.00	800.00	800.00	0.00	0.00%
350.6021.4610.000	INTEREST ON INVESTMENTS	85.94	0.00	113.98	160.00	200.00	40.00	25.00%
354.6021.4610.000	INTEREST ON INVESTMENTS	5,083.40	0.00	0.00	0.00	0.00	0.00	0.00%
355.6021.4610.000	INTEREST ON INVESTMENTS	1,711.93	500.00	5,157.93	5,000.00	500.00	-4,500.00	-90.00%
360.6021.4610.000	INTEREST REV	16,995.87	10,000.00	3,153.11	4,318.00	0.00	-4,318.00	-100.00%
361.6021.4610.000	INTEREST ON INVESTMENTS	14.98	0.00	19.84	30.00	30.00	0.00	0.00%
362.6021.4610.000	INTEREST ON INVESTMENTS	7,420.75	0.00	8,830.92	6,500.00	0.00	-6,500.00	-100.00%
363.6021.4610.000	INTEREST ON INVESTMENTS	48,319.54	10,000.00	104,105.99	160,000.00	80,000.00	-80,000.00	-50.00%
364.6021.4610.000	INTEREST ON INVESTMENTS	0.00	0.00	7,808.33	80,000.00	80,000.00	0.00	0.00%
381.6021.4610.000	INTEREST ON INVESTMENTS	2,121.06	0.00	0.00	0.00	0.00	0.00	0.00%
383.6021.4610.000	INTEREST ON INVESTMENTS	0.10	0.00	0.00	0.00	0.00	0.00	0.00%
392.6021.4610.000	INTEREST ON INVESTMENTS	67.92	0.00	90.08	0.00	0.00	0.00	0.00%
611.6021.4610.000	INTEREST ON INVESTMENTS	182,897.05	100,000.00	290,567.06	350,000.00	100,000.00	-250,000.00	-71.43%
611.8015.4622.000	FARM INCOME	36,987.03	0.00	6,364.45	36,000.00	0.00	-36,000.00	-100.00%
614.6021.4610.000	INTEREST ON INVESTMENTS	10,309.11	25,000.00	13,672.41	25,000.00	25,000.00	0.00	0.00%
690.6021.4610.000	INTEREST ON INVESTMENTS	5,362.00	1,000.00	9,126.84	7,000.00	7,000.00	0.00	0.00%
690.8050.4616.000	Int Chrgd - Accts Rec	0.00	50.00	2.74	5.00	5.00	0.00	0.00%
740.6021.4610.000	INTEREST ON INVESTMENTS	17,216.59	9,000.00	27,770.37	40,000.00	9,000.00	-31,000.00	-77.50%
741.6021.4610.000	INTEREST ON INVESTMENT	15,734.77	2,000.00	11,162.95	12,000.00	2,000.00	-10,000.00	-83.33%
750.6021.4610.000	INTEREST ON INVESTMENTS	1,147.32	800.00	2,046.04	1,600.00	800.00	-800.00	-50.00%
750.8070.4616.000	INT CHRGD - ACCTS REC	154.76	0.00	34.11	11.00	0.00	-11.00	-100.00%
Total Category: 46 - USE OF MONEY & PROPERTY:		**663,797.46**	**410,280.00**	**874,219.66**	**1,229,724.00**	**775,896.00**	**-453,828.00**	**-36.90%**

Budget Comparison Report

Account Number		2021-2022 Total Activity	2022-2023 Total Budget	2022-2023 YTD Activity Through Feb	Parent Budget 2022-2023 FY2023 Amend	Comparison 1 Budget 2023-2024 FY2024 Dept Request	Comparison 1 to Parent Budget Increase / (Decrease)	%
Category: 47 - SPECIAL ASSESSMENTS								
320.6020.4761.000	SPEC ASSESMNTS-SIDEWALK	537.00	5,000.00	0.00	500.00	500.00	0.00	0.00%
Total Category: 47 - SPECIAL ASSESSMENTS:		**537.00**	**5,000.00**	**0.00**	**500.00**	**500.00**	**0.00**	**0.00%**

Budget Comparison Report

Account Number		2021-2022 Total Activity	2022-2023 Total Budget	2022-2023 YTD Activity Through Feb	Parent Budget 2022-2023 FY2023 Amend	Comparison 1 Budget 2023-2024 FY2024 Dept Request	Comparison 1 to Parent Budget Increase / (Decrease)	%
Category: 48 - MISCELLANEOUS REVENUE								
001.1010.4820.000	POLICE DEPT CONTRIBS	0.00	0.00	5,000.00	5,000.00	0.00	-5,000.00	-100.00%
001.1010.4875.000	RFNDS/REIMB: POLICE	9,035.17	4,000.00	4,795.83	5,000.00	4,000.00	-1,000.00	-20.00%
001.1010.4876.000	MISC REV: POLICE	61.33	500.00	0.00	500.00	500.00	0.00	0.00%
001.1030.4875.000	RFNDS/REIMB	102.90	0.00	0.00	0.00	0.00	0.00	0.00%
001.1050.4875.000	RFNDS/REIMB: FIRE	18.41	0.00	5,008.67	50.00	0.00	-50.00	-100.00%
001.1050.4879.000	REBATES	0.00	0.00	6.69	15.00	0.00	-15.00	-100.00%
001.1071.4875.000	RFNDS/REIMB:	0.00	200.00	0.00	200.00	200.00	0.00	0.00%
001.1072.4875.000	RFNDS/REIMB:ELECTRICAL INS	-759.63	0.00	759.63	760.00	0.00	-760.00	-100.00%
001.1099.4875.000	RFNDS/REIMB	4,565.81	4,212.00	0.00	4,545.00	4,545.00	0.00	0.00%
001.2010.4875.000	RFNDS/REIMB: STREETS	436.66	1,000.00	-0.06	3,500.00	0.00	-3,500.00	-100.00%
001.2030.4875.000	RFNDS/REIMB	-253.21	0.00	253.21	253.00	0.00	-253.00	-100.00%
001.2040.4875.000	REFND/REIMB: T SIGNALS	-1,519.26	0.00	1,519.26	1,519.00	0.00	-1,519.00	-100.00%
001.2080.4875.000	RFNDS/REIMB: AIRPORT	1,732.31	0.00	19.00	19.00	0.00	-19.00	-100.00%
001.2095.4875.000	RFNDS/REIMB	0.00	0.00	536.12	536.00	0.00	-536.00	-100.00%
001.2900.4875.000	REFNDS/REIMB	0.00	0.00	0.00	0.00	0.00	0.00	0.00%
001.4010.4875.000	RFNDS/REIMB: LIBRARY	359.85	100.00	1,283.38	1,300.00	100.00	-1,200.00	-92.31%
001.4010.4876.000	MISC REV	5,820.80	9,000.00	5,039.92	9,000.00	7,800.00	-1,200.00	-13.33%
001.4030.4875.000	RFNDS/REIMB: P&R	1,195.57	1,500.00	80.94	1,000.00	1,000.00	0.00	0.00%
001.4030.4879.000	REBATES	0.00	0.00	70.15	0.00	0.00	0.00	0.00%
001.4040.4875.000	P&R REFUNDS & REIMBURSMI	1,173.00	1,000.00	9.30	1,000.00	1,000.00	0.00	0.00%
001.4041.4875.000	RFNDS/REIMB	1,548.50	0.00	52.70	0.00	0.00	0.00	0.00%
001.4045.4875.000	RFNDS/REIMB: POOLS	20.66	100.00	55.00	100.00	100.00	0.00	0.00%
001.4045.4876.000	MISC REV: POOLS	1,690.73	0.00	1,300.00	0.00	0.00	0.00	0.00%
001.4065.4820.000	COLISEUM CONTRIBS	0.00	0.00	1,000.00	1,000.00	0.00	-1,000.00	-100.00%
001.4065.4875.000	RFNDS/REIMB: COLISEUM	213.91	200.00	0.00	0.00	200.00	200.00	0.00%
001.5040.4875.000	RFNDS/REIMB	0.00	0.00	0.00	0.00	0.00	0.00	0.00%
001.6012.4875.000	REFND/REIMB: C.A.	0.00	0.00	910.00	910.00	0.00	-910.00	-100.00%
001.6020.4875.000	REFND/REIMB: CLERK	412.00	500.00	500.00	500.00	0.00	-500.00	-100.00%
001.6025.4875.000	RFNDS/REIMB:	220.00	0.00	0.00	0.00	0.00	0.00	0.00%
001.6040.4875.000	REFND/REIMB: LEGAL	0.00	0.00	292.00	292.00	0.00	-292.00	-100.00%
001.6050.4875.000	REFUNDS/REIMB	1,959.33	3,700.00	1,811.12	1,900.00	3,700.00	1,800.00	94.74%
001.6050.4879.000	REBATES	0.00	0.00	41.54	0.00	0.00	0.00	0.00%
001.6051.4875.000	RFNDS/REIMB	20.66	0.00	0.00	0.00	0.00	0.00	0.00%
001.6070.4875.000	RFNDS/REIMB: D.PROC	0.00	0.00	31.45	0.00	0.00	0.00	0.00%
001.6900.4875.000	RFNDS/REIMB: GEN GVT	2,039.45	1,000.00	3,505.40	1,000.00	1,000.00	0.00	0.00%
001.6900.4876.000	MISC REV	802.65	500.00	741.24	500.00	500.00	0.00	0.00%
030.1010.4875.000	RFNDS/REIMB	760.00	0.00	606.00	606.00	0.00	-606.00	-100.00%
030.6900.4875.000	RFNDS/REIMB: GEN GVT	61.18	0.00	0.00	0.00	0.00	0.00	0.00%

Budget Comparison Report

Account Number		2021-2022 Total Activity	2022-2023 Total Budget	2022-2023 YTD Activity Through Feb	Parent Budget 2022-2023 FY2023 Amend	Comparison 1 Budget 2023-2024 FY2024 Dept Request	Comparison 1 to Parent Budget Increase / (Decrease)	%
031.6900.4875.000	REFUNDS/REIMB	14.33	0.00	0.00	0.00	0.00	0.00	0.00%
110.2010.4875.000	RFNDS/REIMB	585.67	0.00	4,931.65	5,000.00	0.00	-5,000.00	-100.00%
110.2010.4879.000	REBATES	0.00	0.00	180.39	250.00	100.00	-150.00	-60.00%
110.2030.4875.000	RFNDS/REIMB	515.23	0.00	182.30	250.00	0.00	-250.00	-100.00%
110.2040.4875.000	RFNDS/REIMB	519.90	0.00	3,704.27	56.00	0.00	-56.00	-100.00%
110.2050.4875.000	RFNDS/REIMB	861.90	0.00	0.00	0.00	0.00	0.00	0.00%
110.2060.4875.000	RFNDS/REIMB	0.00	0.00	3,520.00	3,520.00	0.00	-3,520.00	-100.00%
130.1010.4875.000	RFNDS/REIMB: POLICE	19,259.15	30,000.00	23,889.66	30,000.00	30,000.00	0.00	0.00%
130.1050.4875.000	REFND/REIMB: FIRE	1,501.00	0.00	0.00	0.00	0.00	0.00	0.00%
130.1075.4875.000	RFNDS/REIMB	0.00	0.00	4,118.78	4,119.00	0.00	-4,119.00	-100.00%
130.1099.4875.000	RFNDS/REIMB: POLICE & FIRE	12,829.11	0.00	0.00	0.00	0.00	0.00	0.00%
130.2010.4875.000	RFNDS/REIMB: STREETS	7,467.28	10,000.00	4,832.98	10,000.00	10,000.00	0.00	0.00%
130.2030.4875.000	RFDS:REIMB/TRAFFIC SIGNALS	5,339.15	0.00	614.63	1,000.00	0.00	-1,000.00	-100.00%
130.2040.4875.000	REFND/REIMB: T SIGNALS	72,697.67	0.00	9,631.50	15,000.00	0.00	-15,000.00	-100.00%
130.2080.4875.000	RFNDS/REIMB	25,130.57	0.00	182,411.85	182,412.00	0.00	-182,412.00	-100.00%
130.4030.4875.000	RFNDS/REIMB: P&R	116,473.19	0.00	5,194.53	5,200.00	0.00	-5,200.00	-100.00%
130.4045.4875.000	RFNDS/REIMB:	9,891.10	0.00	0.00	0.00	0.00	0.00	0.00%
130.6050.4875.000	REFNDS/REIMB	819.93	0.00	0.00	0.00	0.00	0.00	0.00%
130.6900.4875.000	RFNDS/REIMB: GEN GVT	29.89	0.00	0.00	0.00	0.00	0.00	0.00%
130.8016.4875.000	REFUNDS:REIMBURSEMENTS	15,935.35	0.00	0.00	0.00	0.00	0.00	0.00%
130.8050.4875.000	REFUNDS:REIMB	33,567.47	0.00	0.00	0.00	0.00	0.00	0.00%
132.5020.4820.000	ECONOMIC CONTRIBS	11,876.00	230,000.00	0.00	0.00	396,000.00	396,000.00	0.00%
132.5020.4875.000	REFUNDS/REIMB	0.00	335,971.00	200,192.00	358,972.00	0.00	-358,972.00	-100.00%
140.4030.4820.000	PARK & REC CONTRIBS	166,242.18	50,000.00	68,928.71	50,000.00	50,000.00	0.00	0.00%
140.4030.4875.000	RFNDS/REIMB: P&R	185.96	0.00	0.00	0.00	0.00	0.00	0.00%
140.4040.4820.000	PARK & REC CONTRIBUTIONS	0.00	0.00	500.00	500.00	0.00	-500.00	-100.00%
140.4041.4820.000	CONTRIBUTIONS	0.00	0.00	675.00	675.00	0.00	-675.00	-100.00%
140.4065.4820.000	COLISEUM CONTRIBUTIONS	0.00	0.00	150.00	150.00	0.00	-150.00	-100.00%
142.4030.4875.000	RFNDS/REIMB: P&R	323.99	30,780.00	30,011.27	32,381.00	30,781.00	-1,600.00	-4.94%
144.4040.4820.000	HERSEY CONTRIBUTIONS	985.00	7,500.00	0.00	7,447.00	7,447.00	0.00	0.00%
153.1010.4820.000	POLICE DEPT CONTRIBS	6,387.49	2,000.00	2,566.50	5,000.00	2,000.00	-3,000.00	-60.00%
156.1050.4820.000	FIRE DEPT CONTRIBS	3,240.00	2,000.00	6,757.00	6,750.00	2,000.00	-4,750.00	-70.37%
156.1050.4875.000	RFNDS/REIMB	47.48	0.00	0.00	0.00	0.00	0.00	0.00%
170.4010.4820.000	LIBRARY DONATIONS	24,871.66	105,000.00	40,566.13	160,747.00	820,000.00	659,253.00	410.12%
170.4010.4822.000	LIBRARY GENELOGY DONATNS	206.40	75.00	30.00	75.00	75.00	0.00	0.00%
170.4010.4823.000	MEMORIAL BOOK DONATIONS	3,095.93	900.00	1,087.31	2,000.00	2,000.00	0.00	0.00%
170.4010.4875.000	RFNDS/REIMB: LIBRARY	40.13	0.00	0.00	0.00	0.00	0.00	0.00%
177.1010.4820.000	$ SEIZED/ABANDONED ASSETS	6,409.00	3,000.00	1,000.00	3,000.00	3,000.00	0.00	0.00%
184.5030.4875.000	RFNDS/REIMB: FRAUD HOUSIN	10,078.94	2,000.00	3,737.00	2,000.00	2,000.00	0.00	0.00%

Budget Comparison Report

Account Number		2021-2022 Total Activity	2022-2023 Total Budget	2022-2023 YTD Activity Through Feb	Parent Budget 2022-2023 FY2023 Amend	Comparison 1 Budget 2023-2024 FY2024 Dept Request	Comparison 1 to Parent Budget Increase / (Decrease)	%
184.5030.4876.000	MISC REV: OTHER HOUSING	6,364.52	0.00	2,541.52	1,162.00	0.00	-1,162.00	-100.00%
184.5030.4878.000	REFUNDS/REIMBURSMENTS	14.00	155.00	0.00	155.00	155.00	0.00	0.00%
189.3040.4820.000	CONTRIBS FOR COMM HEALTH	0.00	0.00	39,714.00	40,000.00	0.00	-40,000.00	-100.00%
189.3040.4875.000	RFNDS/REIMB	2,000.21	0.00	1,319.53	0.00	0.00	0.00	0.00%
311.2012.4875.000	RFNDS/REIMB	0.00	277,150.00	8,580.41	128,580.00	0.00	-128,580.00	-100.00%
312.2080.4879.000	REBATES	0.00	0.00	4,369.80	4,370.00	0.00	-4,370.00	-100.00%
341.5010.4820.000	PARK & REC CONTRIBS	32,324.00	10,000.00	33,965.00	35,000.00	35,000.00	0.00	0.00%
341.5010.4875.000	REFUNDS/REIMB	5.30	0.00	0.00	0.00	0.00	0.00	0.00%
355.1075.4875.000	RFNDS/REIMB	1,370.34	0.00	10,100.00	10,100.00	0.00	-10,100.00	-100.00%
383.4065.4820.000	COLISEUM CONTRIBUTIONS	100.00	0.00	0.00	0.00	0.00	0.00	0.00%
395.2012.4875.000	RFNDS/REIMB	0.00	0.00	0.00	273,909.00	0.00	-273,909.00	-100.00%
395.5020.4875.000	RFNDS/REIMB: ECON DEV	0.00	467,960.00	0.00	0.00	0.00	0.00	0.00%
610.8015.4875.000	REFUNDS:REIMBURSEMENTS	1,485.65	0.00	17,524.26	12,429.00	0.00	-12,429.00	-100.00%
610.8016.4875.000	REFUNDS:REIMBURSEMENTS	76.70	0.00	13.01	15.00	0.00	-15.00	-100.00%
611.8015.4875.000	REFND/REIMB: WPCP	6,490.13	0.00	823.10	1,000.00	0.00	-1,000.00	-100.00%
611.8015.4875.590	REFND/REIMB: SAN SWR	30.79	0.00	0.00	0.00	0.00	0.00	0.00%
611.8015.4876.000	MISC REV: WPCP	169.02	0.00	160.44	175.00	0.00	-175.00	-100.00%
611.8016.4875.000	REFUNDS:REIMBURSEMENTS	41.32	0.00	0.00	0.00	0.00	0.00	0.00%
611.8016.4878.000	REFUNDS/REIMBURSEMENTS	164.41	0.00	0.00	0.00	0.00	0.00	0.00%
611.8016.4879.000	REBATES	0.00	0.00	60.98	3.00	0.00	-3.00	-100.00%
615.8015.4875.000	REFUNDS/REIMB	0.00	0.00	11,063.52	11,064.00	0.00	-11,064.00	-100.00%
690.8050.4875.000	RFNDS/REIMB: TRANSIT	558.67	0.00	1,043.44	1,050.00	0.00	-1,050.00	-100.00%
690.8050.4876.000	MISC REV: TRANSIT	2,400.00	2,400.00	1,600.00	2,400.00	2,400.00	0.00	0.00%
690.8050.4879.000	REBATES	38.91	0.00	26.57	5.00	0.00	-5.00	-100.00%
740.8065.4875.000	RFNDS/REIMB: STORM SWR	833.57	0.00	7,597.76	7,600.00	0.00	-7,600.00	-100.00%
740.8065.4879.000	REBATES	0.00	0.00	64.61	5.00	0.00	-5.00	-100.00%
750.8070.4875.000	RFNDS/REIMB: COMPOST	63.70	0.00	44.81	50.00	0.00	-50.00	-100.00%
760.8080.4875.000	RFNDS/REIMB	47.94	0.00	21.70	0.00	0.00	0.00	0.00%
Total Category: 48 - MISCELLANEOUS REVENUE:		**643,726.01**	**1,594,403.00**	**775,276.41**	**1,456,581.00**	**1,417,603.00**	**-38,978.00**	**-2.68%**

Budget Comparison Report

Account Number		2021-2022 Total Activity	2022-2023 Total Budget	2022-2023 YTD Activity Through Feb	Parent Budget 2022-2023 FY2023 Amend	Comparison 1 Budget 2023-2024 FY2024 Dept Request	Comparison 1 to Parent Budget Increase / (Decrease)	%
Category: 49 - OTHER FINANCING SOURCE								
001.1050.4961.000	FIRE-NONCAPLZD ASSTS	110.00	0.00	0.00	0.00	0.00	0.00	0.00%
001.1099.4960.000	SALE OF F.A.	0.00	0.00	0.00	2,800.00	0.00	-2,800.00	-100.00%
001.4030.4960.000	SALE OF F.A.-PARKS	0.00	200.00	1.00	200.00	200.00	0.00	0.00%
001.5900.4960.000	SALE OF F.A.	0.00	0.00	74,615.00	74,615.00	0.00	-74,615.00	-100.00%
001.6021.4999.000	CREDIT MEMO HOLDING	-1,054.14	0.00	-8,543.36	0.00	0.00	0.00	0.00%
001.6900.4960.000	SALE OF F.A.-GEN GOVT	2.00	0.00	0.00	0.00	0.00	0.00	0.00%
030.4030.4960.000	SALE OF F.A.-PARKS	0.00	0.00	6,000.00	6,000.00	0.00	-6,000.00	-100.00%
032.1050.4960.000	SALE OF F.A.	62,008.85	0.00	0.00	0.00	0.00	0.00	0.00%
110.2010.4960.000	SALE OF FA	0.00	0.00	29,000.00	29,000.00	0.00	-29,000.00	-100.00%
110.2010.4961.000	PW-NONCAPLZD ASSTS	0.00	0.00	179.95	850.00	200.00	-650.00	-76.47%
110.2040.4960.000	SALE OF FA	0.00	0.00	400.00	0.00	0.00	0.00	0.00%
110.2060.4960.000	SALE OF F.A.-ENGINEERING	0.00	0.00	14,551.45	14,551.00	0.00	-14,551.00	-100.00%
121.5020.4960.000	SALE OF F.A.	247,700.00	0.00	0.00	0.00	0.00	0.00	0.00%
183.5020.4960.000	SALE OF F.A.	0.00	0.00	1,025.00	1,025.00	0.00	-1,025.00	-100.00%
355.1075.4960.000	SALE OF F.A.-CODE ENFORCEM	23,756.00	0.00	8,260.00	15,000.00	10,000.00	-5,000.00	-33.33%
355.6021.4990.000	DEBT ISSUANCE	0.00	0.00	610,000.00	610,000.00	0.00	-610,000.00	-100.00%
355.6021.4993.000	BOND PREMIUM	0.00	0.00	-4,867.80	4,867.00	0.00	-4,867.00	-100.00%
363.6021.4990.000	DEBT ISSUANCE	9,130,000.00	0.00	0.00	0.00	0.00	0.00	0.00%
363.6021.4993.000	BOND PREMIUM	400,159.66	0.00	0.00	0.00	0.00	0.00	0.00%
364.6021.4990.000	DEBT ISSUANCE	0.00	10,000,000.00	9,555,000.00	9,555,000.00	0.00	-9,555,000.00	-100.00%
364.6021.4993.000	BOND PREMIUM	0.00	0.00	190,991.25	190,991.00	0.00	-190,991.00	-100.00%
365.6021.4990.000	DEBT ISSUANCE	0.00	0.00	0.00	0.00	11,356,000.00	11,356,000.00	0.00%
611.6021.4990.000	DEBT ISSUANCE	0.00	4,000,000.00	0.00	0.00	0.00	0.00	0.00%
612.8016.4990.000	DEBT ISSUANCE	292,387.86	0.00	0.00	0.00	0.00	0.00	0.00%
615.8015.4990.000	DEBT ISSUANCE	0.00	8,000,000.00	0.00	7,443,455.00	4,795,050.00	-2,648,405.00	-35.58%
690.8050.4960.000	SALE OF F.A.-TRANSIT	501.01	0.00	0.00	500.00	0.00	-500.00	-100.00%
740.8065.4960.000	SALE OF F.A.-SEWER	0.00	0.00	6,312.28	6,312.00	0.00	-6,312.00	-100.00%
Total Category: 49 - OTHER FINANCING SOURCE:		**10,155,571.24**	**22,000,200.00**	**10,482,924.77**	**17,955,166.00**	**16,161,450.00**	**-1,793,716.00**	**-9.99%**

Budget Comparison Report

Account Number		2021-2022 Total Activity	2022-2023 Total Budget	2022-2023 YTD Activity Through Feb	Parent Budget 2022-2023 FY2023 Amend	Comparison 1 Budget 2023-2024 FY2024 Dept Request	Comparison 1 to Parent Budget Increase / (Decrease)	%
Category: 65 - TRANSFERS								
001.9000.6500.110	TR FRM ROAD USE TAX	1,116,774.01	1,211,244.00	577,154.24	1,161,940.00	1,176,363.00	14,423.00	1.24%
001.9000.6500.112	TR FRM EMPLOYEE BNFT	2,608,912.25	2,935,235.00	1,323,503.77	2,898,190.00	3,070,871.00	172,681.00	5.96%
001.9000.6500.117	TR FRM POLICE RETIRE	1,237,682.69	1,200,148.00	560,984.78	1,151,802.00	1,180,148.00	28,346.00	2.46%
001.9000.6500.119	TR FROM EMEG	251,339.05	255,879.00	131,473.54	255,908.00	262,974.00	7,066.00	2.76%
001.9000.6500.121	TR FRM LOCAL OPTION	0.00	0.00	126,160.00	126,160.00	328,526.00	202,366.00	160.40%
001.9000.6500.125	TR FRM TIF	136,401.60	188,743.00	110,749.66	372,694.00	127,915.00	-244,779.00	-65.68%
001.9000.6500.152	TRANSFER IN - FUND 152	20.00	0.00	0.00	0.00	0.00	0.00	0.00%
001.9000.6500.389	TRANSFER IN - ARPA	187,901.62	288,147.00	0.00	288,147.00	49,389.00	-238,758.00	-82.86%
010.9000.6500.121	TR FROM LOCAL OPTION	99,023.00	91,512.00	0.00	91,512.00	288,000.00	196,488.00	214.71%
030.9000.6500.300	TR FRM CIP (CAP IMPR	437,598.68	796,599.00	319,252.34	890,689.00	696,423.00	-194,266.00	-21.81%
032.9000.6500.156	TRANS IN FIRE DEPT DONATIO	15,000.00	0.00	0.00	0.00	0.00	0.00	0.00%
032.9000.6500.300	TR FRM CIP (CAP IMPR	40,485.52	0.00	0.00	93,755.00	94,086.00	331.00	0.35%
110.9000.6500.001	TRANSFER IN - GF	0.00	0.00	2,231.36	2,232.00	0.00	-2,232.00	-100.00%
110.9000.6500.030	TRANSFER IN - FUND 145 RUT	0.00	0.00	0.00	0.00	8,100.00	8,100.00	0.00%
110.9000.6500.145	TRANSFER IN - FUND 145	0.00	0.00	0.00	0.00	141,000.00	141,000.00	0.00%
110.9000.6500.360	TRANSFER IN - FUND 360	0.00	0.00	244,285.24	245,729.00	0.00	-245,729.00	-100.00%
110.9000.6500.363	TRANSFER IN - FUND 363 BON	0.00	0.00	0.00	352,323.00	0.00	-352,323.00	-100.00%
125.9000.6500.001	Transfer from GF	8,601.50	0.00	0.00	0.00	0.00	0.00	0.00%
125.9000.6500.126	TRANSFER IN - FUND 126	913.11	0.00	0.00	0.00	0.00	0.00	0.00%
130.9000.6500.145	TRANSFER IN - FUND 145	0.00	0.00	7,450.00	7,450.00	0.00	-7,450.00	-100.00%
130.9000.6500.149	TRANSFER IN - FUND 149	0.00	0.00	614.96	615.00	0.00	-615.00	-100.00%
132.9000.6500.030	Transfer to Grant Funds	0.00	110,000.00	0.00	0.00	0.00	0.00	0.00%
132.9000.6500.110	TRANSFER IN - RUT	0.00	0.00	0.00	0.00	0.00	0.00	0.00%
132.9000.6500.121	TR FROM LOCAL OPTION	32,908.71	220,000.00	0.00	92,091.00	375,000.00	282,909.00	307.21%
132.9000.6500.300	TRANSFER IN - FUND 300	69,853.97	0.00	0.00	0.00	0.00	0.00	0.00%
132.9000.6500.740	TRANSFER IN - STORM WATER	54,617.00	0.00	0.00	0.00	0.00	0.00	0.00%
133.9000.6500.031	TRANSFER IN - FUND 031	0.00	33,750.00	0.00	0.00	26,775.00	26,775.00	0.00%
133.9000.6500.140	TRANSFER IN - FUND 140	0.00	0.00	0.00	0.00	82,275.00	82,275.00	0.00%
140.9000.6500.130	TRANSFER IN - INSURANCE 13(	0.00	0.00	0.00	41,614.00	0.00	-41,614.00	-100.00%
145.9000.6500.001	TRANSFER IN - GEN FUND	0.99	0.00	0.00	0.00	0.00	0.00	0.00%
149.9000.6500.001	TRANSFER IN - GEN FUND	4,558.93	0.00	0.00	0.00	0.00	0.00	0.00%
149.9000.6500.121	TR FRM LOCAL OPTION	0.00	0.00	0.00	0.00	0.00	0.00	0.00%
153.9000.6500.152	TRANSFER IN - FUND 152	2,694.00	0.00	0.00	0.00	0.00	0.00	0.00%
156.9000.6500.130	TRANSFER IN - FUND 130	0.00	0.00	0.00	54,124.00	0.00	-54,124.00	-100.00%
156.9000.6500.157	TRANSFER IN - FUND 157	467.19	0.00	0.00	0.00	0.00	0.00	0.00%
170.9000.6500.130	TRANSFER IN - FUIND 130	0.00	0.00	0.00	3,091.00	0.00	-3,091.00	-100.00%
183.9000.6500.121	TRANSFER IN - LOST	0.00	0.00	0.00	12,364.00	0.00	-12,364.00	-100.00%
189.9000.6500.179	TRANSFER IN - COMM & ECON	79,839.36	0.00	0.00	0.00	0.00	0.00	0.00%

Budget Comparison Report

Account Number		2021-2022 Total Activity	2022-2023 Total Budget	2022-2023 YTD Activity Through Feb	Parent Budget 2022-2023 FY2023 Amend	Comparison 1 Budget 2023-2024 FY2024 Dept Request	Comparison 1 to Parent Budget Increase / (Decrease)	%
189.9000.6500.180	TRANSFER IN - HOUSING GRAN	28,073.24	0.00	0.00	0.00	0.00	0.00	0.00%
200.9000.6500.121	TRANSFER IN - LOST - PROP TA	2,879,760.00	3,641,775.00	1,494,226.76	3,641,775.00	3,333,609.00	-308,166.00	-8.46%
200.9000.6500.125	TR FRM TIF SPEC REV	394,090.85	386,365.00	0.00	386,365.00	325,806.00	-60,559.00	-15.67%
200.9000.6500.610	TRANSFER IN - WPCP	492,718.00	503,818.00	0.00	503,818.00	504,518.00	700.00	0.14%
200.9000.6500.740	TRANSFER IN - STORM SEWER	549,056.00	527,606.00	0.00	527,606.00	541,506.00	13,900.00	2.63%
200.9000.6500.741	Transfer In - Storm/sewer	0.00	0.00	0.00	0.00	0.00	0.00	0.00%
300.9000.6500.157	TRANSFER IN - FUND 157	4,500.00	0.00	0.00	0.00	0.00	0.00	0.00%
311.9000.6500.110	TRANSFER IN - FUND 110 RUT	0.00	0.00	0.00	104,620.00	0.00	-104,620.00	-100.00%
311.9000.6500.121	TRANSFER IN - LOST	248,836.75	689,030.00	0.00	1,053,079.00	25,000.00	-1,028,079.00	-97.63%
311.9000.6500.389	TRANSFER IN - FUND 389	0.00	850,000.00	0.00	600,000.00	0.00	-600,000.00	-100.00%
312.9000.6500.030	TRANSFER IN - CAPITAL RESER	0.00	0.00	0.00	0.00	50,000.00	50,000.00	0.00%
312.9000.6500.031	TRANSFER IN - FUND 031	0.00	0.00	0.00	0.00	11,500.00	11,500.00	0.00%
312.9000.6500.130	TRANSFER IN - FUND 130	0.00	0.00	8,380.38	8,381.00	0.00	-8,381.00	-100.00%
340.9000.6500.121	TR IN - LOST	0.00	0.00	0.00	56,599.00	0.00	-56,599.00	-100.00%
355.9000.6500.001	TR FROM GENERAL	18,034.62	20,000.00	0.00	20,000.00	20,000.00	0.00	0.00%
355.9000.6500.360	TRANSFER IN - 2019 GO BOND	250,000.00	0.00	0.00	0.00	0.00	0.00	0.00%
355.9000.6500.363	TRANSFER IN - 2021 GO BOND	1,050,000.00	0.00	0.00	0.00	0.00	0.00	0.00%
355.9000.6500.364	TRANSFER IN - 2022 GO BOND	0.00	600,000.00	0.00	0.00	0.00	0.00	0.00%
360.9000.6500.363	TRANSFER IN - 2021 GO Bonds	0.00	0.00	0.00	25,065.00	0.00	-25,065.00	-100.00%
362.9000.6500.110	TRANSFER IN - FUND 110	0.00	375,223.00	0.00	0.00	642,803.00	642,803.00	0.00%
362.9000.6500.360	TRANSFER IN - FUND 360	250,000.00	0.00	0.00	0.00	0.00	0.00	0.00%
362.9000.6500.363	TRANSFER IN - FUND 363	157,949.93	0.00	0.00	0.00	0.00	0.00	0.00%
363.9000.6500.121	TRANSFER IN - FUND 121 LOST	0.00	0.00	0.00	128,026.00	0.00	-128,026.00	-100.00%
363.9000.6500.354	TRANSFER IN - FUND 354	452,827.50	0.00	0.00	0.00	0.00	0.00	0.00%
363.9000.6500.360	TRANSFER IN - FUND 360	0.00	0.00	246,368.90	246,090.00	0.00	-246,090.00	-100.00%
363.9000.6500.364	TRANSFER IN - FUND 364 2022	0.00	0.00	0.00	0.00	2,463,464.00	2,463,464.00	0.00%
363.9000.6500.389	TRANSFER IN - FUND 389	0.00	2,000,000.00	0.00	0.00	2,461,741.00	2,461,741.00	0.00%
363.9000.6500.611	TRANSFER IN - FUND 611	0.00	740,000.00	0.00	0.00	523,900.00	523,900.00	0.00%
363.9000.6500.740	TRANSFER IN - FUND 740	0.00	77,326.00	0.00	0.00	0.00	0.00	0.00%
364.9000.6500.121	TRANSFER IN - FUND 121 LOST	0.00	0.00	0.00	100,000.00	115,250.00	15,250.00	15.25%
364.9000.6500.615	TRANSFER IN - FUND 364	0.00	0.00	0.00	0.00	489,500.00	489,500.00	0.00%
381.9000.6500.612	TRANSFER IN - FUND 612	288,550.00	0.00	0.00	0.00	0.00	0.00	0.00%
381.9000.6500.740	TRANSFER IN - FUND 740	0.00	0.00	0.00	0.00	0.00	0.00	0.00%
383.9000.6500.360	TRANSFER IN - 2019 BONDS	32,102.09	0.00	0.00	0.00	0.00	0.00	0.00%
395.9000.6500.110	TRANSFER IN - RUT	0.00	428,520.00	0.00	149,881.00	0.00	-149,881.00	-100.00%
395.9000.6500.121	TRS IN LOST	22,779.20	284,235.00	0.00	284,235.00	0.00	-284,235.00	-100.00%
395.9000.6500.354	TRANSFER IN - FUND 354	73,529.90	0.00	0.00	0.00	0.00	0.00	0.00%
395.9000.6500.360	TRANSFER IN - FUND 360	1,218,371.91	104,300.00	344,190.08	344,190.00	0.00	-344,190.00	-100.00%
395.9000.6500.363	TRANSFER IN - FUND 363	0.00	0.00	0.00	5,796.00	7,000.00	1,204.00	20.77%

Budget Comparison Report

Account Number		2021-2022 Total Activity	2022-2023 Total Budget	2022-2023 YTD Activity Through Feb	Parent Budget 2022-2023 FY2023 Amend	Comparison 1 Budget 2023-2024 FY2024 Dept Request	Comparison 1 to Parent Budget Increase / (Decrease)	%
395.9000.6500.381	TRANSFER IN - 2019 CY STREET	150.02	0.00	0.00	0.00	0.00	0.00	0.00%
395.9000.6500.611	TRANSFER IN - FUND 611	0.00	63,361.00	0.00	74,610.00	0.00	-74,610.00	-100.00%
395.9000.6500.740	TRANSFER IN - FUND 740	0.00	236,405.00	0.00	236,405.00	0.00	-236,405.00	-100.00%
610.9000.6500.611	TR FRM WPCP REVENUE	7,005,649.07	11,949,972.00	2,766,935.56	6,764,364.00	7,964,951.00	1,200,587.00	17.75%
611.9000.6500.121	TRANSFER IN - FUND 121	0.00	0.00	18,580.00	18,580.00	0.00	-18,580.00	-100.00%
612.9000.6500.610	TRANSFER IN - FUND 610	1,820.00	0.00	0.00	0.00	0.00	0.00	0.00%
612.9000.6500.611	TRANSFER IN - WPCP	370,695.10	0.00	0.00	0.00	0.00	0.00	0.00%
615.9000.6500.130	TRANSFER IN - FUIND 130	0.00	0.00	43,016.27	43,017.00	0.00	-43,017.00	-100.00%
615.9000.6500.611	TRANSFER IN - FUND 611	413,132.12	0.00	90,135.15	47,402.00	447,500.00	400,098.00	844.05%
616.9000.6500.611	TR FRM WPCP REVENUE	0.00	0.00	191,854.27	0.00	192,000.00	192,000.00	0.00%
616.9000.6500.615	TRANSFER IN - FUND 615	0.00	0.00	0.00	4,548,255.00	507,450.00	-4,040,805.00	-88.84%
618.9000.6500.145	TRANSFER IN - TORNADO FUN	0.00	0.00	0.00	0.00	0.00	0.00	0.00%
690.9000.6500.001	TR FRM GENERAL	155,551.67	250,000.00	121,074.97	250,000.00	275,000.00	25,000.00	10.00%
690.9000.6500.121	TRANSFER IN - FUND 121	0.00	0.00	8,090.00	8,090.00	0.00	-8,090.00	-100.00%
740.9000.6500.121	TRANSFER IN - FUND 121	0.00	0.00	4,170.00	4,170.00	0.00	-4,170.00	-100.00%
740.9000.6500.381	TRANSFER IN - FUND 381	33,732.65	0.00	0.00	0.00	0.00	0.00	0.00%
742.9000.6500.145	TRANSFER IN - TORNADO FUN	0.00	0.00	0.00	0.00	0.00	0.00	0.00%
760.9000.6500.140	TRANSFER IN - FUND 140 P&R	0.00	0.00	0.00	20,000.00	0.00	-20,000.00	-100.00%
	Total Category: 65 - TRANSFERS:	**22,777,503.80**	**31,059,193.00**	**8,740,882.23**	**28,342,849.00**	**28,810,343.00**	**467,494.00**	**1.65%**
	Report Total:	**77,155,452.01**	**102,467,631.99**	**51,020,324.93**	**101,958,169.00**	**91,019,600.00**	**-10,938,569.00**	**-10.73%**

Fund Summary

Fund	2021-2022 Total Activity	2022-2023 Total Budget	2022-2023 YTD Activity Through Feb	Parent Budget 2022-2023 FY2023 Amend	Comparison 1 Budget 2023-2024 FY2024 Dept Request	Comparison 1 to Parent Budget Increase / (Decrease)	%
001 - GENERAL FUND	16,186,589.19	17,225,737.00	9,551,262.61	17,607,887.00	18,020,483.00	412,596.00	2.34%
010 - CASH FLOW RESERVE FUND	121,111.96	114,512.00	35,446.96	146,512.00	348,000.00	201,488.00	137.52%
030 - CAPITAL RESERVE	438,419.86	796,599.00	325,871.43	897,295.00	696,423.00	-200,872.00	-22.39%
031 - CAPITAL RSRV-BLDG MAINT	2,955.55	1,500.00	3,079.67	5,000.00	3,000.00	-2,000.00	-40.00%
032 - CIP LARGE VEHICLE/EQUIPMENT	117,494.37	0.00	0.00	93,755.00	94,086.00	331.00	0.35%
110 - ROAD USE TAX	3,815,733.93	3,490,000.00	2,923,593.02	4,243,761.00	3,729,400.00	-514,361.00	-12.12%
112 - EMPLOYEE BENEFITS FUND	2,850,034.37	3,001,623.00	1,695,818.83	3,001,623.00	2,330,221.00	-671,402.00	-22.37%
117 - POLICE/FIRE RETIREMENT	1,284,876.34	1,234,945.00	701,983.64	1,234,945.00	993,788.00	-241,157.00	-19.53%
119 - EMERGENCY FUND	251,339.05	255,908.00	144,526.02	255,908.00	262,974.00	7,066.00	2.76%
121 - LOCAL OPTION SALES TAX	4,960,283.01	4,234,000.00	2,712,511.06	3,800,000.00	3,800,000.00	0.00	0.00%
125 - TAX INCREMENT FINANCING	937,094.96	488,027.00	304,312.61	491,255.00	1,114,541.00	623,286.00	126.88%
126 - TIF-LMI	152.00	0.00	0.00	0.00	0.00	0.00	0.00%
130 - CITY TORT LIABILITY	323,923.99	41,000.00	240,782.26	257,816.00	41,000.00	-216,816.00	-84.10%
132 - GRANTS-STATE/LOCAL AGENCIES	715,991.68	3,810,867.00	314,027.00	1,849,471.00	2,709,360.00	859,889.00	46.49%
133 - UNDESIGNATED FEDERAL GRANTS	0.00	233,750.00	100,612.34	150,000.00	394,050.00	244,050.00	162.70%
140 - PARK & REC DONATION FUND	168,015.85	50,900.00	74,101.46	97,939.00	52,000.00	-45,939.00	-46.91%
141 - MTOWN TENNIS ASSOC	26.59	20.00	35.27	50.00	20.00	-30.00	-60.00%
142 - SOFTBALL ASSOCIATION FUND	323.99	30,780.00	30,011.27	32,381.00	30,781.00	-1,600.00	-4.94%
144 - LIVE HEALTHY IOWA	1,042.74	7,540.00	76.59	7,547.00	7,547.00	0.00	0.00%
145 - TORNADO GENERAL	185,873.13	0.00	63,396.56	63,397.00	0.00	-63,397.00	-100.00%
146 - FEMA VALOR	55,164.71	0.00	0.00	0.00	0.00	0.00	0.00%
147 - FEMA DEMO	16,074.93	0.00	0.00	0.00	0.00	0.00	0.00%
148 - FEMA-COVID19	10,556.73	8,500.00	8,121.47	8,122.00	13,435.00	5,313.00	65.41%
149 - FEMA - WINDS	137,829.99	0.00	3,398,726.92	5,017,101.00	65,000.00	-4,952,101.00	-98.70%
150 - LOCAL PD GRANTS	41,967.92	55,000.00	38,656.12	55,000.00	60,000.00	5,000.00	9.09%
151 - DEPT OF JUSTICE GRANTS	31,117.70	125,800.00	53,530.12	158,490.00	56,800.00	-101,690.00	-64.16%
152 - POLICE UNDESIGNATED GRANTS	103,039.24	111,979.00	88,496.67	142,871.00	109,507.00	-33,364.00	-23.35%
153 - POLICE DEPT DONATION FUND	9,733.43	2,700.00	3,411.47	6,200.00	3,200.00	-3,000.00	-48.39%
156 - FIRE DEPT DONATION FUND	4,412.58	2,000.00	7,461.56	61,874.00	3,000.00	-58,874.00	-95.15%
157 - FIRE DEPT GRANTS	42.40	60.00	0.00	0.00	0.00	0.00	0.00%
160 - ECONOMIC DEVELOPMENT GIFT	505.62	350.00	670.59	900.00	1,000.00	100.00	11.11%
161 - SURETY DEPOSITS/SUBDIVIDER	105.50	185.00	139.89	185.00	185.00	0.00	0.00%
170 - LIBRARY DONATION FUND	29,351.39	107,275.00	48,308.94	173,313.00	824,475.00	651,162.00	375.71%
177 - SEIZED ASSETS (POLICE)	6,778.97	3,250.00	1,330.42	3,500.00	3,500.00	0.00	0.00%
179 - OTHER COMM AND ECON DEVELOP	681.40	0.00	0.00	0.00	0.00	0.00	0.00%
180 - HOUSING GRANTS	239.59	0.00	0.00	0.00	0.00	0.00	0.00%
183 - FY 08 EDI (ECON DEV INCENTIVE)	0.00	0.00	1,025.00	13,389.00	0.00	-13,389.00	-100.00%
184 - VOUCHERS - 002, 003	1,275,885.12	1,245,630.00	890,202.42	1,250,142.00	1,248,980.00	-1,162.00	-0.09%

Budget Comparison Report

Fund	2021-2022 Total Activity	2022-2023 Total Budget	2022-2023 YTD Activity Through Feb	Parent Budget 2022-2023 FY2023 Amend	Comparison 1 Budget 2023-2024 FY2024 Dept Request	Comparison 1 to Parent Budget Increase / (Decrease)	%
189 - #6 HUD LEAD GRANT	648,514.32	1,605,541.99	414,916.60	1,647,742.00	1,582,850.00	-64,892.00	-3.94%
200 - GO BONDS DEBT FUND	5,334,684.39	5,871,254.00	1,965,602.32	5,881,754.00	7,124,597.00	1,242,843.00	21.13%
300 - CIP COLLECTION FUND	637,715.68	640,770.00	368,492.99	649,770.00	663,436.00	13,666.00	2.10%
310 - FEDERAL STREET GRANTS	-30.42	0.00	0.00	0.00	0.00	0.00	0.00%
311 - RISE STREET GRANTS	248,836.75	4,413,371.00	8,580.41	6,483,470.00	25,000.00	-6,458,470.00	-99.61%
312 - AIRPORT PROJECT FUND	695,440.27	166,666.00	479,533.19	621,786.00	211,500.00	-410,286.00	-65.99%
320 - SPECIAL ASSESSMENT PROJECTS	537.00	5,000.00	0.00	500.00	500.00	0.00	0.00%
340 - BIKE PATH PROJECT FUND	148,159.53	360,254.00	0.00	177,324.00	1,584,815.00	1,407,491.00	793.74%
341 - TREES FOREVER PROJECT	32,567.76	10,000.00	34,480.00	35,800.00	35,800.00	0.00	0.00%
350 - GO BONDS CAPITAL PROJECTS	85.94	0.00	113.98	160.00	200.00	40.00	25.00%
354 - POLICE & FIRE STATIONS	5,083.40	0.00	0.00	0.00	0.00	0.00	0.00%
355 - 2015 GO BONDS (D&D)	1,369,871.89	620,500.00	628,650.13	664,967.00	30,500.00	-634,467.00	-95.41%
360 - 2019 GO BONDS & PROJECTS	16,995.87	10,000.00	3,153.11	29,383.00	0.00	-29,383.00	-100.00%
361 - LIBRARY BUILDING ADDITION	14.98	0.00	19.84	30.00	30.00	0.00	0.00%
362 - 2020 GO BONDS	415,370.68	375,223.00	8,830.92	6,500.00	642,803.00	636,303.00	9,789.28%
363 - 2021 GO BONDS	10,156,306.70	3,427,326.00	375,474.89	1,059,116.00	5,529,105.00	4,469,989.00	422.05%
364 - 2022 GO BONDS	0.00	10,000,000.00	9,753,799.58	10,125,991.00	684,750.00	-9,441,241.00	-93.24%
365 - 2023 GO BONDS	0.00	0.00	0.00	0.00	11,356,000.00	11,356,000.00	0.00%
381 - 2019 CY STREET,SIDEWALK,PARKING	390,671.06	0.00	0.00	0.00	0.00	0.00	0.00%
383 - COLISEUM REMODEL	32,312.19	0.00	0.00	0.00	0.00	0.00	0.00%
389 - AMERICAN RESCUE PLAN	1,993,589.42	1,986,933.00	1,993,589.41	1,993,590.00	0.00	-1,993,590.00	-100.00%
392 - TIF DISTRICT III CAP PROJECTS	67.92	0.00	90.08	0.00	0.00	0.00	0.00%
395 - ECONOMIC DEVELOPMENT PROJEC	1,314,831.03	1,584,781.00	344,190.08	1,369,026.00	7,000.00	-1,362,026.00	-99.49%
610 - WATER POLLUTION CONTROL	7,007,211.42	11,949,972.00	2,784,472.83	6,776,808.00	7,964,951.00	1,188,143.00	17.53%
611 - WPCP REVENUE	8,138,096.53	12,151,496.00	5,814,165.60	8,348,483.00	8,092,700.00	-255,783.00	-3.06%
612 - WPCP REVENUE BOND FUND	664,902.96	0.00	0.00	0.00	0.00	0.00	0.00%
614 - WPCP CAPITAL IMPROVEMENT RSR	10,309.11	25,000.00	13,672.41	25,000.00	25,000.00	0.00	0.00%
615 - WPCP PLANT & IMPROVEMENTS	413,132.12	8,000,000.00	144,214.94	7,544,938.00	5,242,550.00	-2,302,388.00	-30.52%
616 - SANITARY SEWER REHAB PROJECT	0.00	0.00	191,854.27	4,548,255.00	699,450.00	-3,848,805.00	-84.62%
617 - SANITARY SEWER NEW CONSTRUCT	8,233.00	15,500.00	4,601.36	8,500.00	8,500.00	0.00	0.00%
618 - TORNADO-WPCP	580.97	0.00	0.00	0.00	0.00	0.00	0.00%
650 - URBAN TREE FUND	0.00	123,444.00	0.00	0.00	0.00	0.00	0.00%
690 - TRANSIT OPERATING	993,395.90	978,863.00	904,608.53	1,269,558.00	1,009,007.00	-260,551.00	-20.52%
740 - STORM SEWER UTILITY	2,227,969.54	1,362,000.00	941,903.28	1,410,911.00	1,360,500.00	-50,411.00	-3.57%
741 - 2016 GO STORM WATER PROJ	15,734.77	2,000.00	11,162.95	12,000.00	2,000.00	-10,000.00	-83.33%
742 - TORNADO - STORM/SEWER	898.25	0.00	0.00	0.00	0.00	0.00	0.00%
750 - COMPOSTING FACILITY	106,800.34	60,300.00	55,325.68	73,178.00	71,300.00	-1,878.00	-2.57%
760 - P&R CONCESSIONS ENTERPRISE	41,790.96	41,000.00	13,295.36	66,000.00	48,000.00	-18,000.00	-27.27%
Report Total:	**77,155,452.01**	**102,467,631.99**	**51,020,324.93**	**101,958,169.00**	**91,019,600.00**	**-10,938,569.00**	**-10.73%**
Intrafund transfers				-11,360,021	-9,111,901		
Marshalltown Water Works				7,351,409	7,932,778		
TOTAL REVENUE BUDGET				97,949,557	89,840,477		

Budget Comparison Report

Account Summary

Account Number		2021-2022 Total Activity	2022-2023 Total Budget	2022-2023 YTD Activity Through Feb	Parent Budget 2022-2023 FY2023 Amend	Comparison 1 Budget 2023-2024 FY2024 Dept Request	Comparison 1 to Parent Budget Increase / (Decrease)	%
Fund: 001 - GENERAL FUND								
Function: 1010 - Police Operations/Crime Prevention								
001.1010.5010.010	REGULAR-NON UNION	666,002.90	696,251.00	434,272.95	672,225.00	713,132.00	40,907.00	6.09%
001.1010.5010.020	REGULAR-POLICE UNION	2,307,414.49	2,540,141.00	1,493,525.21	2,412,199.00	2,523,171.00	110,972.00	4.60%
001.1010.5020.010	OVERTIME-NON UNION	52.68	9,200.00	194.90	9,200.00	9,200.00	0.00	0.00%
001.1010.5020.020	OVERTIME-POLICE UNION	228,701.24	150,000.00	148,827.92	230,000.00	150,000.00	-80,000.00	-34.78%
001.1010.5021.010	EXTRA DUTY-NON UNION	1,215.98	500.00	1,575.00	2,000.00	500.00	-1,500.00	-75.00%
001.1010.5021.020	EXTRA DUTY-POLICE UNION	15,902.99	12,000.00	8,522.50	12,000.00	12,000.00	0.00	0.00%
001.1010.5021.070	EXTRA DUTY OVERTIME	0.00	500.00	0.00	500.00	500.00	0.00	0.00%
001.1010.5030.070	PART-TIME TEMPORARY	500.00	0.00	0.00	0.00	0.00	0.00	0.00%
001.1010.5050.060	PART-TIME REGULAR	6,999.67	10,787.00	6,200.12	11,470.00	11,537.00	67.00	0.58%
001.1010.5056.040	OTHR DEPT-PPME UNION	3,496.93	0.00	862.59	0.00	0.00	0.00	0.00%
001.1010.5057.010	CAR REIMB-NON UNION	4,333.42	4,333.00	2,333.38	4,000.00	4,333.00	333.00	8.33%
001.1010.5060.020	TERM PAYOUTS-POLICE UNIOI	15,216.56	0.00	25,188.96	0.00	0.00	0.00	0.00%
001.1010.5061.010	RHSA PAYOUTS-NON UNION	0.00	0.00	30,013.52	30,014.00	0.00	-30,014.00	-100.00%
001.1010.5101.010	SOCIAL SECURITY-NON UNION	2,860.86	3,156.00	2,005.00	3,215.00	3,316.00	101.00	3.14%
001.1010.5101.020	SOCIAL SECURITY-POLICE UNIC	8,370.90	9,408.00	6,265.63	9,710.00	10,046.00	336.00	3.46%
001.1010.5101.040	SOCIAL SECURITY-PPME UNIOI	203.52	0.00	52.22	0.00	0.00	0.00	0.00%
001.1010.5101.060	SOCIAL SECURITY-PT REGULAR	433.96	669.00	384.41	711.00	715.00	4.00	0.56%
001.1010.5101.070	SOCIAL SECURITY-PT TEMP	31.00	0.00	0.00	0.00	0.00	0.00	0.00%
001.1010.5102.010	MEDICARE-NON UNION	9,441.99	10,158.00	6,190.09	9,806.00	10,403.00	597.00	6.09%
001.1010.5102.020	MEDICARE-POLICE UNION	37,553.85	36,832.00	24,528.66	38,312.00	38,457.00	145.00	0.38%
001.1010.5102.040	MEDICARE-PPME UNION	47.61	0.00	12.20	0.00	0.00	0.00	0.00%
001.1010.5102.060	MEDICARE-PT REGULAR	101.54	156.00	89.91	166.00	167.00	1.00	0.60%
001.1010.5102.070	MEDICARE-TEMPORARY	7.25	0.00	0.00	0.00	0.00	0.00	0.00%
001.1010.5111.010	IPERS-NON UNION	4,563.24	4,805.00	3,140.43	4,801.00	5,048.00	247.00	5.14%
001.1010.5111.020	IPERS-POLICE UNION	14,040.28	14,324.00	9,564.03	14,501.00	15,295.00	794.00	5.48%
001.1010.5111.040	IPERS-PPME UNION	330.11	0.00	81.44	0.00	0.00	0.00	0.00%
001.1010.5111.060	IPERS-PT REGULAR	660.77	1,018.00	538.08	1,036.00	1,089.00	53.00	5.12%
001.1010.5113.010	RETIREMENT-NON UNION	161,587.16	154,239.00	94,130.67	146,834.00	151,589.00	4,755.00	3.24%
001.1010.5113.020	RETIREMENT-POLICE UNION	594,301.78	589,589.00	339,545.26	548,648.00	572,236.00	23,588.00	4.30%
001.1010.5121.010	GRP INSUR-NON UNION	88,517.10	98,771.00	60,842.11	103,854.00	110,146.00	6,292.00	6.06%
001.1010.5121.020	GRP INSUR-POLICE UNION	411,536.79	483,950.00	246,964.80	413,003.00	493,998.00	80,995.00	19.61%

Budget Comparison Report

Account Number		2021-2022 Total Activity	2022-2023 Total Budget	2022-2023 YTD Activity Through Feb	Parent Budget 2022-2023 FY2023 Amend	Comparison 1 Budget 2023-2024 FY2024 Dept Request	Comparison 1 to Parent Budget Increase / (Decrease)	%
001.1010.5121.040	GRP INSUR-PPME UNION	904.37	0.00	207.64	0.00	0.00	0.00	0.00%
001.1010.5122.000	RETIREES GRP HLTH INS	102,347.00	110,492.00	77,430.72	118,500.00	135,155.00	16,655.00	14.05%
001.1010.5123.010	WORKCOMP-NON UNION	8,760.69	9,118.00	6,050.93	8,684.00	9,323.00	639.00	7.36%
001.1010.5123.020	WORKCOMP-POLICE UNION	35,647.86	33,685.00	22,748.35	34,643.00	35,127.00	484.00	1.40%
001.1010.5123.040	WORKCOMP-PPME UNION	44.45	0.00	19.75	0.00	0.00	0.00	0.00%
001.1010.5123.060	WORKCOMP-PT REGULAR	99.67	267.00	141.13	272.00	286.00	14.00	5.15%
001.1010.5123.070	WORKCOMP-TEMPORARY	7.00	0.00	0.00	0.00	0.00	0.00	0.00%
001.1010.5132.000	CLOTHING EXPENSE	22,005.68	21,000.00	21,970.62	21,000.00	21,000.00	0.00	0.00%
001.1010.5151.000	PHYSICALS/IMMUNIZATIONS	1,709.00	4,000.00	4,353.50	6,000.00	4,000.00	-2,000.00	-33.33%
001.1010.5192.020	UNEMPLOYMENT-POLICE UNI(	191.00	0.00	0.00	0.00	0.00	0.00	0.00%
001.1010.5210.000	ADVERTISING & LEGAL PUB	373.27	1,500.00	229.08	1,500.00	1,500.00	0.00	0.00%
001.1010.5230.000	CONSULTING & PROF FEES	40,126.74	4,200.00	7,318.56	7,000.00	4,200.00	-2,800.00	-40.00%
001.1010.5250.000	COURT, RECORD & FILING FEE!	37.00	0.00	0.00	0.00	0.00	0.00	0.00%
001.1010.5280.000	DUES, MEMBER, SUBSCRIPTN	21,245.98	19,700.00	24,008.19	23,000.00	23,000.00	0.00	0.00%
001.1010.5290.000	INSURANCE - GENERAL	10,414.23	11,761.00	0.00	11,937.00	14,324.00	2,387.00	20.00%
001.1010.5300.000	INSURANCE - TORT LIAB	44,999.86	51,379.00	0.00	50,226.00	60,271.00	10,045.00	20.00%
001.1010.5321.000	K9 EXPENSES	531.87	1,000.00	0.00	1,000.00	1,000.00	0.00	0.00%
001.1010.5342.000	CONTRACT-OUTSIDE HELP	2,297.38	250.00	843.20	750.00	250.00	-500.00	-66.67%
001.1010.5344.000	CONTRACT-MAINTENANCE	18,506.87	23,747.00	12,719.52	23,747.00	23,747.00	0.00	0.00%
001.1010.5347.000	CONTRACT-SOFTWARE MAINT	33,493.58	34,000.00	32,236.62	34,000.00	34,000.00	0.00	0.00%
001.1010.5359.000	TOWING SERVICES	480.00	500.00	1,683.00	1,500.00	500.00	-1,000.00	-66.67%
001.1010.5360.000	POSTAGE & SHIPPING	1,107.56	700.00	433.81	700.00	700.00	0.00	0.00%
001.1010.5370.000	PRINTING & BINDING	578.12	500.00	877.31	500.00	500.00	0.00	0.00%
001.1010.5380.000	RENTS & LEASES	14,411.34	14,500.00	14,411.34	14,500.00	14,500.00	0.00	0.00%
001.1010.5410.000	REPAIRS & MAINTENANCE	10,285.87	18,000.00	8,265.20	18,000.00	18,000.00	0.00	0.00%
001.1010.5431.000	INTERPRETING	14,744.82	6,500.00	9,036.84	12,000.00	12,000.00	0.00	0.00%
001.1010.5450.000	TELEPHONE/OTHR COMMNCT	6,145.96	5,500.00	4,766.88	5,500.00	5,500.00	0.00	0.00%
001.1010.5451.000	OTHR COMMNCTN/AIR CARDS	8,901.10	9,100.00	7,550.08	9,100.00	9,100.00	0.00	0.00%
001.1010.5460.000	CONFERENCE EXPENSE	16,128.58	15,000.00	17,212.49	15,000.00	15,000.00	0.00	0.00%
001.1010.5461.000	TRAVEL-AIRFARE	566.40	0.00	0.00	0.00	0.00	0.00	0.00%
001.1010.5462.000	TRAVEL EXPENSE - OTHER	188.70	100.00	0.00	100.00	100.00	0.00	0.00%
001.1010.5464.000	TRAVEL-PER DIEM	1,253.71	1,000.00	560.65	1,000.00	1,000.00	0.00	0.00%
001.1010.5465.000	TRAVEL - HOTEL/MOTEL	3,480.53	2,500.00	1,547.64	2,500.00	2,500.00	0.00	0.00%
001.1010.5470.000	TRAINING-NEW OFFICER	27,467.24	18,000.00	11,868.06	30,000.00	18,000.00	-12,000.00	-40.00%
001.1010.5471.000	TRAINING	750.00	400.00	0.00	400.00	400.00	0.00	0.00%
001.1010.5472.000	MILEAGE REIMBURSE	2,923.83	1,700.00	892.50	1,700.00	1,700.00	0.00	0.00%
001.1010.5475.000	RECRUITING EXPENSES	0.00	350.00	0.00	350.00	350.00	0.00	0.00%
001.1010.5565.000	VEHICLE OPER/MAINT SPPLY	20,839.04	25,000.00	22,511.09	25,000.00	25,000.00	0.00	0.00%
001.1010.5570.000	VEHICLE GAS	70,310.18	70,000.00	54,269.32	85,000.00	85,000.00	0.00	0.00%

Budget Comparison Report

Account Number		2021-2022 Total Activity	2022-2023 Total Budget	2022-2023 YTD Activity Through Feb	Parent Budget 2022-2023 FY2023 Amend	Comparison 1 Budget 2023-2024 FY2024 Dept Request	Comparison 1 to Parent Budget Increase / (Decrease)	%
001.1010.5571.000	VEHICLE DIESEL FUEL	77.31	500.00	156.06	500.00	500.00	0.00	0.00%
001.1010.5600.000	OPERATING SUPPLIES	20,483.07	21,500.00	17,001.48	21,500.00	21,500.00	0.00	0.00%
001.1010.5601.000	PROMOTION/PROGRAM SPPL\	1,291.02	2,000.00	1,380.43	2,000.00	2,000.00	0.00	0.00%
001.1010.5605.000	OFFICE SUPPLIES	925.80	3,000.00	1,416.31	3,000.00	3,000.00	0.00	0.00%
001.1010.5610.000	AMMUNITION EXPENSE	12,532.23	15,000.00	10,270.91	20,000.00	20,000.00	0.00	0.00%
001.1010.5612.000	COMPUTER COMPONENTS	129.85	1,500.00	0.00	1,500.00	1,500.00	0.00	0.00%
001.1010.5702.000	MINOR OFFICE FURN/EQUIP	92.13	0.00	0.00	0.00	0.00	0.00	0.00%
001.1010.5703.000	MINOR COMPUTER	1,869.10	2,000.00	611.27	2,000.00	2,000.00	0.00	0.00%
001.1010.5718.000	MINOR EQUIP, UNCLASSFIED	6,450.82	7,500.00	4,170.45	7,500.00	7,500.00	0.00	0.00%
001.1010.5980.000	REFUNDS/REIMB	330.00	0.00	0.00	0.00	0.00	0.00	0.00%
Total Function: 1010 - Police Operations/Crime Prevention:		**5,172,914.38**	**5,399,236.00**	**3,347,022.92**	**5,301,314.00**	**5,471,911.00**	**170,597.00**	**3.22%**
Function: 1011 - Automated Traffic Enforcement								
001.1011.5342.000	CONTRACT-OUTSIDE HELP	0.00	0.00	0.00	0.00	3,500.00	3,500.00	0.00%
Total Function: 1011 - Automated Traffic Enforcement:		**0.00**	**0.00**	**0.00**	**0.00**	**3,500.00**	**3,500.00**	**0.00%**
Function: 1030 - Emergency Mgmt								
001.1030.5331.000	PAYMENTS-OTHER ENTITIES	32,663.00	33,970.00	34,296.00	34,296.00	36,011.00	1,715.00	5.00%
001.1030.5481.000	ELECTRICITY (SIRENS)	1,780.65	1,800.00	1,156.78	1,800.00	1,800.00	0.00	0.00%
001.1030.5600.000	OPERATING SUPPLIES	0.00	400.00	0.00	400.00	400.00	0.00	0.00%
Total Function: 1030 - Emergency Mgmt:		**34,443.65**	**36,170.00**	**35,452.78**	**36,496.00**	**38,211.00**	**1,715.00**	**4.70%**
Function: 1040 - Flood Control								
001.1040.5300.000	INSURANCE - TORT LIAB	10.65	445.00	0.00	7.00	8.00	1.00	14.29%
001.1040.5485.000	STORM WATER FEES	48.00	48.00	48.00	48.00	48.00	0.00	0.00%
Total Function: 1040 - Flood Control:		**58.65**	**493.00**	**48.00**	**55.00**	**56.00**	**1.00**	**1.82%**
Function: 1050 - Fire Department								
001.1050.5010.010	REGULAR-NON UNION	613,625.78	629,994.00	419,323.92	636,994.00	662,059.00	25,065.00	3.93%
001.1050.5010.030	REGULAR-FIRE UNION	1,400,381.25	1,460,058.00	976,630.20	1,481,058.00	1,510,960.00	29,902.00	2.02%
001.1050.5020.010	OVERTIME-NON UNION	158.75	0.00	0.00	0.00	0.00	0.00	0.00%
001.1050.5020.030	OVERTIME-FIRE UNION	65,759.40	63,000.00	47,321.89	68,000.00	68,000.00	0.00	0.00%
001.1050.5056.040	OTHR DEPT-PPME UNION	694.55	0.00	817.20	0.00	0.00	0.00	0.00%
001.1050.5061.010	RHSA PAYOUTS-NON UNION	32,359.67	0.00	0.00	0.00	0.00	0.00	0.00%
001.1050.5101.010	SOCIAL SECURITY-NON UNION	10,541.55	11,207.00	7,307.47	11,331.00	11,611.00	280.00	2.47%
001.1050.5101.040	SOCIAL SECURITY-PPME UNIO	40.16	0.00	48.10	0.00	0.00	0.00	0.00%
001.1050.5102.010	MEDICARE-NON UNION	8,023.41	9,135.00	5,888.96	9,237.00	9,600.00	363.00	3.93%
001.1050.5102.030	MEDICARE-FIRE UNION	19,987.32	21,171.00	13,957.06	22,462.00	22,895.00	433.00	1.93%
001.1050.5102.040	MEDICARE-PPME UNION	9.38	0.00	11.24	0.00	0.00	0.00	0.00%
001.1050.5111.010	IPERS-NON UNION	4,326.32	4,622.00	3,008.40	4,622.00	4,863.00	241.00	5.21%
001.1050.5111.040	IPERS-PPME UNION	65.57	0.00	77.16	0.00	0.00	0.00	0.00%
001.1050.5112.010	ICMA-NON UNION	24,294.36	25,042.00	16,349.44	25,042.00	25,795.00	753.00	3.01%

Budget Comparison Report

Account Number		2021-2022 Total Activity	2022-2023 Total Budget	2022-2023 YTD Activity Through Feb	Parent Budget 2022-2023 FY2023 Amend	Comparison 1 Budget 2023-2024 FY2024 Dept Request	Comparison 1 to Parent Budget Increase / (Decrease)	%
001.1050.5113.010	RETIREMENT-NON UNION	115,014.54	107,366.00	70,362.99	107,366.00	109,104.00	1,738.00	1.62%
001.1050.5113.030	RETIREMENT-FIRE UNION	366,779.21	348,954.00	228,395.51	348,954.00	347,219.00	-1,735.00	-0.50%
001.1050.5121.010	GRP INSUR-NON UNION	73,997.91	83,394.00	50,530.58	87,686.00	92,997.00	5,311.00	6.06%
001.1050.5121.030	GRP INSUR-FIRE UNION	260,255.41	298,662.00	185,045.44	314,045.00	315,930.00	1,885.00	0.60%
001.1050.5121.040	GRP INSUR-PPME UNION	206.23	0.00	241.16	0.00	0.00	0.00	0.00%
001.1050.5122.000	RETIREES GRP HLTH INS	85,318.52	102,176.00	55,082.26	85,027.00	96,329.00	11,302.00	13.29%
001.1050.5123.010	WORKCOMP-NON UNION	29,662.05	29,306.00	19,189.00	29,306.00	30,794.00	1,488.00	5.08%
001.1050.5123.030	WORKCOMP-FIRE UNION	73,746.80	73,441.00	50,448.52	76,861.00	79,422.00	2,561.00	3.33%
001.1050.5123.040	WORKCOMP-PPME UNION	8.83	0.00	18.71	0.00	0.00	0.00	0.00%
001.1050.5132.000	CLOTHING EXPENSE	20,370.51	23,000.00	10,582.01	16,200.00	24,000.00	7,800.00	48.15%
001.1050.5151.000	PHYSICALS/IMMUNIZATIONS	364.00	4,000.00	937.40	2,500.00	4,000.00	1,500.00	60.00%
001.1050.5210.000	ADVERTISING & LEGAL PUB	99.00	0.00	20.00	20.00	0.00	-20.00	-100.00%
001.1050.5216.000	BACKGROUND CHECKS	40.00	0.00	0.00	0.00	0.00	0.00	0.00%
001.1050.5230.000	CONSULTING & PROF FEES	0.00	0.00	275.00	275.00	0.00	-275.00	-100.00%
001.1050.5251.000	LICENSE & PERMITS	0.00	400.00	0.00	400.00	400.00	0.00	0.00%
001.1050.5280.000	DUES, MEMBER, SUBSCRIPTN	615.80	2,600.00	2,866.55	2,100.00	2,600.00	500.00	23.81%
001.1050.5290.000	INSURANCE - GENERAL	18,369.28	25,259.00	78.00	21,912.00	26,294.00	4,382.00	20.00%
001.1050.5300.000	INSURANCE - TORT LIAB	15,441.45	16,964.00	0.00	15,449.00	18,539.00	3,090.00	20.00%
001.1050.5342.000	CONTRACT-OUTSIDE HELP	11,409.70	0.00	5,200.00	19,000.00	30,000.00	11,000.00	57.89%
001.1050.5344.000	CONTRACT-MAINTENANCE	38,972.58	22,000.00	10,791.73	22,000.00	17,200.00	-4,800.00	-21.82%
001.1050.5347.000	CONTRACT-SOFTWARE MAINT	7,497.18	9,500.00	22,244.45	26,800.00	26,800.00	0.00	0.00%
001.1050.5347.150	CONTRACT-CMPTR TECH SPPR	425.00	650.00	0.00	650.00	650.00	0.00	0.00%
001.1050.5360.000	POSTAGE & SHIPPING	216.05	150.00	320.85	300.00	550.00	250.00	83.33%
001.1050.5370.000	PRINTING & BINDING	205.00	0.00	0.00	0.00	0.00	0.00	0.00%
001.1050.5380.000	RENTS & LEASES	232.05	250.00	0.00	250.00	250.00	0.00	0.00%
001.1050.5410.000	REPAIRS & MAINTENANCE	3,247.44	5,000.00	7,357.16	5,000.00	5,000.00	0.00	0.00%
001.1050.5413.000	VEHICLE REPAIRS & MAINTEN/	15,696.63	9,500.00	18,396.32	11,500.00	11,500.00	0.00	0.00%
001.1050.5450.000	TELEPHONE/OTHR COMMNCT	6,891.11	7,000.00	5,931.84	7,000.00	7,000.00	0.00	0.00%
001.1050.5460.000	CONFERENCE EXPENSE	10,271.20	13,000.00	5,430.67	6,800.00	13,000.00	6,200.00	91.18%
001.1050.5470.000	TRAINING	3,615.66	350.00	898.96	1,550.00	1,200.00	-350.00	-22.58%
001.1050.5565.000	VEHICLE OPER/MAINT SPPLY	7,502.28	5,750.00	2,426.44	3,750.00	3,750.00	0.00	0.00%
001.1050.5570.000	VEHICLE GAS	4,141.32	3,700.00	3,771.79	3,700.00	4,200.00	500.00	13.51%
001.1050.5571.000	VEHICLE DIESEL FUEL	11,799.79	11,000.00	9,578.99	15,000.00	15,000.00	0.00	0.00%
001.1050.5600.000	OPERATING SUPPLIES	10,852.42	9,500.00	4,085.39	9,500.00	9,500.00	0.00	0.00%
001.1050.5601.000	PROMOTION/PROGRAM SPPL\	0.00	400.00	0.00	250.00	400.00	150.00	60.00%
001.1050.5605.000	OFFICE SUPPLIES	527.92	1,300.00	261.20	1,300.00	1,300.00	0.00	0.00%
001.1050.5630.000	EMS SUPPLIES	3,028.99	4,000.00	6,000.52	4,000.00	4,000.00	0.00	0.00%
001.1050.5703.000	MINOR COMPUTER	978.61	950.00	292.41	950.00	950.00	0.00	0.00%
001.1050.5718.000	MINOR EQUIP, UNCLASSFIED	11,412.86	10,000.00	1,545.09	7,000.00	10,000.00	3,000.00	42.86%

Account Number		2021-2022 Total Activity	2022-2023 Total Budget	2022-2023 YTD Activity Through Feb	Parent Budget 2022-2023 FY2023 Amend	Comparison 1 Budget 2023-2024 FY2024 Dept Request	Comparison 1 to Parent Budget Increase / (Decrease)	%
001.1050.5980.000	REFUNDS/REIMB	100.00	0.00	8.01	0.00	0.00	0.00	0.00%
	Total Function: 1050 - Fire Department:	**3,389,580.80**	**3,453,751.00**	**2,269,355.99**	**3,513,147.00**	**3,625,661.00**	**112,514.00**	**3.20%**
Function: 1070 - Building Inspections								
001.1070.5010.010	REGULAR-NON UNION	117,029.06	65,129.00	41,147.74	53,381.00	30,975.00	-22,406.00	-41.97%
001.1070.5061.010	RHSA PAYOUTS-NON UNION	21,283.63	0.00	10,753.73	10,754.00	0.00	-10,754.00	-100.00%
001.1070.5101.010	SOCIAL SECURITY-NON UNION	7,144.10	4,038.00	2,510.53	3,310.00	1,920.00	-1,390.00	-41.99%
001.1070.5102.010	MEDICARE-NON UNION	1,670.75	944.00	587.17	775.00	449.00	-326.00	-42.06%
001.1070.5111.010	IPERS-NON UNION	11,047.44	6,148.00	3,789.93	4,945.00	2,924.00	-2,021.00	-40.87%
001.1070.5121.010	GRP INSUR-NON UNION	12,884.54	6,513.00	3,642.55	10,481.00	3,430.00	-7,051.00	-67.27%
001.1070.5122.000	RETIREES GRP HLTH INS	3,589.25	0.00	5,908.28	9,194.00	10,568.00	1,374.00	14.94%
001.1070.5123.010	WORKCOMP-NON UNION	1,511.26	1,275.00	955.45	1,027.00	607.00	-420.00	-40.90%
001.1070.5280.000	DUES, MEMBER, SUBSCRIPTN	175.00	400.00	175.00	400.00	400.00	0.00	0.00%
001.1070.5290.000	INSURANCE - GENERAL	464.21	266.00	0.00	264.00	317.00	53.00	20.08%
001.1070.5300.000	INSURANCE - TORT LIAB	915.51	1,089.00	0.00	788.00	946.00	158.00	20.05%
001.1070.5342.000	CONTRACT-OUTSIDE HELP	22,619.19	133,500.00	81,665.91	157,000.00	213,750.00	56,750.00	36.15%
001.1070.5360.000	POSTAGE & SHIPPING	8.55	100.00	0.00	100.00	100.00	0.00	0.00%
001.1070.5370.000	PRINTING & BINDING	0.00	400.00	0.00	0.00	0.00	0.00	0.00%
001.1070.5450.000	TELEPHONE/OTHR COMMNCT	833.07	750.00	427.72	500.00	500.00	0.00	0.00%
001.1070.5565.000	VEHICLE OPER/MAINT SPPLY	221.21	500.00	0.00	0.00	0.00	0.00	0.00%
001.1070.5570.000	VEHICLE GAS	1,052.80	750.00	590.57	600.00	0.00	-600.00	-100.00%
001.1070.5600.000	OPERATING SUPPLIES	79.41	250.00	4.38	300.00	0.00	-300.00	-100.00%
001.1070.5605.000	OFFICE SUPPLIES	105.70	200.00	0.00	0.00	100.00	100.00	0.00%
001.1070.5718.000	MINOR EQUIP, UNCLASSFIED	63.90	0.00	0.00	0.00	0.00	0.00	0.00%
001.1070.5980.000	REFUNDS/REIMB	0.00	0.00	120.00	0.00	0.00	0.00	0.00%
	Total Function: 1070 - Building Inspections:	**202,698.58**	**222,252.00**	**152,278.96**	**253,819.00**	**266,986.00**	**13,167.00**	**5.19%**
Function: 1071 - Rental Inspections								
001.1071.5010.010	REGULAR-NON UNION	114,347.46	58,104.00	76,611.12	86,225.00	49,560.00	-36,665.00	-42.52%
001.1071.5061.010	RHSA PAYOUTS - NON UNION	0.00	0.00	5,838.22	6,674.00	0.00	-6,674.00	-100.00%
001.1071.5101.010	SOCIAL SECURITY-NON UNION	6,760.83	3,602.00	4,549.22	5,346.00	3,073.00	-2,273.00	-42.52%
001.1071.5102.010	MEDICARE-NON UNION	1,581.22	843.00	1,063.79	1,250.00	719.00	-531.00	-42.48%
001.1071.5111.010	IPERS-NON UNION	10,794.27	5,485.00	6,486.92	7,573.00	4,678.00	-2,895.00	-38.23%
001.1071.5121.010	GRP INSUR-NON UNION	18,345.90	13,154.00	11,652.59	14,579.00	12,004.00	-2,575.00	-17.66%
001.1071.5123.010	WORKCOMP-NON UNION	1,212.79	1,126.00	1,426.41	1,561.00	804.00	-757.00	-48.49%
001.1071.5251.000	LICENSE & PERMITS	0.00	275.00	0.00	275.00	0.00	-275.00	-100.00%
001.1071.5280.000	DUES, MEMBER, SUBSCRIPTN	35.00	50.00	0.00	50.00	50.00	0.00	0.00%
001.1071.5290.000	INSURANCE - GENERAL	464.21	266.00	0.00	533.00	640.00	107.00	20.08%
001.1071.5300.000	INSURANCE - TORT LIAB	751.75	883.00	0.00	691.00	829.00	138.00	19.97%
001.1071.5342.000	CONTRACT-OUTSIDE HELP	0.00	100,000.00	270.00	62,500.00	150,000.00	87,500.00	140.00%
001.1071.5360.000	POSTAGE & SHIPPING	689.00	900.00	300.00	900.00	1,000.00	100.00	11.11%

Budget Comparison Report

Account Number		2021-2022 Total Activity	2022-2023 Total Budget	2022-2023 YTD Activity Through Feb	Parent Budget 2022-2023 FY2023 Amend	Comparison 1 Budget 2023-2024 FY2024 Dept Request	Comparison 1 to Parent Budget Increase / (Decrease)	%
001.1071.5410.000	REPAIRS & MAINTENANCE	575.00	50.00	0.00	50.00	0.00	-50.00	-100.00%
001.1071.5450.000	TELEPHONE/OTHR COMMNCT	1,056.26	700.00	760.13	800.00	700.00	-100.00	-12.50%
001.1071.5460.000	CONFERENCE EXPENSE	0.00	200.00	400.00	400.00	400.00	0.00	0.00%
001.1071.5565.000	VEHICLE OPER/MAINT SPPLY	61.18	500.00	0.00	500.00	500.00	0.00	0.00%
001.1071.5570.000	VEHICLE GAS	641.65	600.00	440.72	600.00	600.00	0.00	0.00%
001.1071.5600.000	OPERATING SUPPLIES	829.98	500.00	145.33	500.00	250.00	-250.00	-50.00%
001.1071.5605.000	OFFICE SUPPLIES	39.50	300.00	153.08	300.00	200.00	-100.00	-33.33%
001.1071.5718.000	MINOR EQUIP. UNCLASSIFIED	63.90	0.00	0.00	0.00	0.00	0.00	0.00%
	Total Function: 1071 - Rental Inspections:	**158,249.90**	**187,538.00**	**110,097.53**	**191,307.00**	**226,007.00**	**34,700.00**	**18.14%**
Function: 1072 - Electrial Inspections								
001.1072.5010.010	REGULAR-NON UNION	18,332.58	28,228.00	8,205.87	9,507.00	0.00	-9,507.00	-100.00%
001.1072.5010.040	REGULAR-PPME UNION	32,265.19	32,911.00	11,117.12	16,756.00	0.00	-16,756.00	-100.00%
001.1072.5020.010	OVERTIME-NON UNION	0.00	0.00	6.95	0.00	0.00	0.00	0.00%
001.1072.5020.040	OVERTIME-PPME UNION	441.95	0.00	0.00	0.00	0.00	0.00	0.00%
001.1072.5060.010	TERM PAYOUTS-NON UNION	2,564.31	0.00	0.00	0.00	0.00	0.00	0.00%
001.1072.5060.040	TERM PAYOUTS-PPME UNION	629.35	0.00	0.00	0.00	0.00	0.00	0.00%
001.1072.5061.040	RHSA PAYOUTS-PPME UNION	5,689.11	0.00	0.00	0.00	0.00	0.00	0.00%
001.1072.5101.010	SOCIAL SECURITY-NON UNION	1,279.45	1,750.00	509.18	590.00	0.00	-590.00	-100.00%
001.1072.5101.040	SOCIAL SECURITY-PPME UNIO	1,948.59	2,040.00	638.55	1,039.00	0.00	-1,039.00	-100.00%
001.1072.5102.010	MEDICARE-NON UNION	299.37	409.00	119.11	138.00	0.00	-138.00	-100.00%
001.1072.5102.040	MEDICARE-PPME UNION	455.68	477.00	149.37	243.00	0.00	-243.00	-100.00%
001.1072.5111.010	IPERS-NON UNION	1,730.51	2,665.00	747.03	869.00	0.00	-869.00	-100.00%
001.1072.5111.040	IPERS-PPME UNION	2,631.64	3,107.00	1,021.18	1,553.00	0.00	-1,553.00	-100.00%
001.1072.5121.010	GRP INSUR-NON UNION	16.88	0.00	33.71	0.00	0.00	0.00	0.00%
001.1072.5121.040	GRP INSUR-PPME UNION	7,223.30	9,226.00	2,339.35	3,234.00	0.00	-3,234.00	-100.00%
001.1072.5122.000	RETIREES GRP HLTH INS	712.96	1,149.00	750.50	1,174.00	1,354.00	180.00	15.33%
001.1072.5123.010	WORKCOMP-NON UNION	423.50	1,073.00	298.92	351.00	0.00	-351.00	-100.00%
001.1072.5123.040	WORKCOMP-PPME UNION	801.22	1,251.00	414.56	626.00	0.00	-626.00	-100.00%
001.1072.5151.000	PHYSICALS/IMMUNIZATIONS	152.98	0.00	264.89	0.00	0.00	0.00	0.00%
001.1072.5210.000	ADVERTISING & LEGAL PUB	71.10	0.00	16.00	0.00	0.00	0.00	0.00%
001.1072.5216.000	BACKGROUND CHECKS	7.00	0.00	9.00	0.00	0.00	0.00	0.00%
001.1072.5280.000	DUES, MEMBER, SUBSCRIPTN	0.00	300.00	0.00	0.00	0.00	0.00	0.00%
001.1072.5300.000	INSURANCE - TORT LIAB	288.29	336.00	0.00	313.00	376.00	63.00	20.13%
001.1072.5342.000	CONTRACT-OUTSIDE HELP	2,200.00	0.00	13,520.00	0.00	0.00	0.00	0.00%
001.1072.5360.000	POSTAGE & SHIPPING	15.54	0.00	27.50	30.00	0.00	-30.00	-100.00%
001.1072.5600.000	OPERATING SUPPLIES	341.20	1,000.00	0.00	0.00	0.00	0.00	0.00%
001.1072.5605.000	OFFICE SUPPLIES	0.00	0.00	15.99	20.00	0.00	-20.00	-100.00%
001.1072.5704.000	MINOR SOFTWARE	0.00	0.00	137.43	140.00	0.00	-140.00	-100.00%
001.1072.5718.000	MINOR EQUIP, UNCLASSFIED	252.97	0.00	0.00	0.00	0.00	0.00	0.00%

Budget Comparison Report

Account Number		2021-2022 Total Activity	2022-2023 Total Budget	2022-2023 YTD Activity Through Feb	Parent Budget 2022-2023 FY2023 Amend	Comparison 1 Budget 2023-2024 FY2024 Dept Request	Comparison 1 to Parent Budget Increase / (Decrease)	%
001.1072.5720.000	MINOR BOOKS,FILM,REC	0.00	150.00	0.00	0.00	0.00	0.00	0.00%
001.1072.5980.000	REFUNDS/REIMB	0.00	0.00	215.00	115.00	0.00	-115.00	-100.00%
	Total Function: 1072 - Electrial Inspections:	**80,774.67**	**86,072.00**	**40,557.21**	**36,698.00**	**1,730.00**	**-34,968.00**	**-95.29%**
Function: 1075 - Code Enforcement								
001.1075.5010.010	REGULAR-NON UNION	56,627.54	58,228.00	39,756.32	61,988.00	64,009.00	2,021.00	3.26%
001.1075.5101.010	SOCIAL SECURITY-NON UNION	3,344.79	3,610.00	2,345.76	3,843.00	3,969.00	126.00	3.28%
001.1075.5102.010	MEDICARE-NON UNION	782.33	844.00	548.62	899.00	928.00	29.00	3.23%
001.1075.5111.010	IPERS-NON UNION	5,345.67	5,497.00	3,658.59	5,757.00	6,042.00	285.00	4.95%
001.1075.5121.010	GRP INSUR-NON UNION	14,289.38	15,376.00	10,304.48	16,977.00	18,006.00	1,029.00	6.06%
001.1075.5123.010	WORKCOMP-NON UNION	611.41	1,140.00	743.27	1,196.00	1,255.00	59.00	4.93%
001.1075.5210.000	ADVERTISING & LEGAL PUB	0.00	100.00	0.00	100.00	100.00	0.00	0.00%
001.1075.5230.000	CONSULTING & PROF FEES	805.00	0.00	0.00	0.00	0.00	0.00	0.00%
001.1075.5250.000	COURT, RECORD & FILING FEE	0.00	250.00	0.00	0.00	0.00	0.00	0.00%
001.1075.5261.000	RESIDENTIAL CLEANUP	16,190.72	20,000.00	7,689.00	15,000.00	15,000.00	0.00	0.00%
001.1075.5262.000	RESIDENTIAL SNOW REMOVAL	5,387.50	3,000.00	0.00	3,000.00	5,000.00	2,000.00	66.67%
001.1075.5263.000	RESIDENTIAL WEED CONTROL	11,610.00	15,000.00	7,345.00	15,000.00	15,000.00	0.00	0.00%
001.1075.5290.000	INSURANCE - GENERAL	396.11	268.00	0.00	269.00	323.00	54.00	20.07%
001.1075.5300.000	INSURANCE - TORT LIAB	513.59	626.00	0.00	562.00	674.00	112.00	19.93%
001.1075.5347.000	CONTRACT-SOFTWARE MAINT	5,068.46	13,290.00	6,090.00	17,967.00	12,150.00	-5,817.00	-32.38%
001.1075.5359.000	TOWING SERVICES	0.00	1,000.00	360.00	1,000.00	1,000.00	0.00	0.00%
001.1075.5360.000	POSTAGE & SHIPPING	1,007.00	2,000.00	1,302.10	2,000.00	2,000.00	0.00	0.00%
001.1075.5410.000	REPAIRS & MAINTENANCE	0.00	200.00	0.00	200.00	200.00	0.00	0.00%
001.1075.5440.000	TAXES PAID	0.00	2,000.00	0.00	2,000.00	2,000.00	0.00	0.00%
001.1075.5450.000	TELEPHONE/OTHR COMMNCT	969.83	1,200.00	647.32	1,200.00	1,200.00	0.00	0.00%
001.1075.5460.000	CONFERENCE EXPENSE	0.00	150.00	0.00	150.00	150.00	0.00	0.00%
001.1075.5483.000	WATER	0.00	500.00	0.00	500.00	500.00	0.00	0.00%
001.1075.5485.000	STORM WATER FEES	482.49	690.00	838.00	1,000.00	690.00	-310.00	-31.00%
001.1075.5565.000	VEHICLE OPER/MAINT SPPLY	10.13	500.00	0.00	500.00	500.00	0.00	0.00%
001.1075.5570.000	VEHICLE GAS	1,421.14	1,500.00	1,143.25	2,000.00	1,500.00	-500.00	-25.00%
001.1075.5600.000	OPERATING SUPPLIES	102.73	200.00	13.35	200.00	200.00	0.00	0.00%
001.1075.5605.000	OFFICE SUPPLIES	24.72	200.00	0.00	200.00	200.00	0.00	0.00%
001.1075.5718.000	MINOR EQUIP, UNCLASSFIED	31.95	0.00	0.00	0.00	0.00	0.00	0.00%
	Total Function: 1075 - Code Enforcement:	**125,022.49**	**147,369.00**	**82,785.06**	**153,508.00**	**152,596.00**	**-912.00**	**-0.59%**
Function: 1090 - Animal Control								
001.1090.5331.000	PAYMENTS-OTHER ENTITIES	52,000.00	52,000.00	60,000.03	80,000.00	83,200.00	3,200.00	4.00%
	Total Function: 1090 - Animal Control:	**52,000.00**	**52,000.00**	**60,000.03**	**80,000.00**	**83,200.00**	**3,200.00**	**4.00%**
Function: 1099 - Police and Fire Building Exps								
001.1099.5010.010	REGULAR-NON UNION	0.00	0.00	872.67	0.00	1,663.00	1,663.00	0.00%

Budget Comparison Report

Account Number		2021-2022 Total Activity	2022-2023 Total Budget	2022-2023 YTD Activity Through Feb	Parent Budget 2022-2023 FY2023 Amend	Comparison 1 Budget 2023-2024 FY2024 Dept Request	Comparison 1 to Parent Budget Increase / (Decrease)	%
001.1099.5101.010	SOCIAL SECURITY-NON UNION	0.00	0.00	52.12	0.00	103.00	103.00	0.00%
001.1099.5102.010	MEDICARE-NON UNION	0.00	0.00	12.23	0.00	24.00	24.00	0.00%
001.1099.5111.010	IPERS-NON UNION	0.00	0.00	77.72	0.00	157.00	157.00	0.00%
001.1099.5121.010	GRP INSUR-NON UNION	0.00	0.00	179.92	0.00	363.00	363.00	0.00%
001.1099.5123.010	WORKCOMP-NON UNION	0.00	0.00	20.35	0.00	41.00	41.00	0.00%
001.1099.5290.000	INSURANCE - GENERAL	21,777.13	24,084.00	0.00	28,600.00	34,320.00	5,720.00	20.00%
001.1099.5300.000	INSURANCE - TORT LIAB	661.78	559.00	0.00	779.00	935.00	156.00	20.03%
001.1099.5342.000	CONTRACT-OUTSIDE HELP	6,171.96	10,000.00	2,650.05	10,000.00	10,000.00	0.00	0.00%
001.1099.5344.000	CONTRACT-MAINTENANCE	5,938.91	8,647.98	2,925.15	8,648.00	8,648.00	0.00	0.00%
001.1099.5347.000	CONTRACT SOFTWARE & TECH	1,712.00	0.00	0.00	5,200.00	3,600.00	-1,600.00	-30.77%
001.1099.5386.000	CONTRACT LAWN CARE	1,066.00	1,200.00	7,957.00	16,500.00	16,500.00	0.00	0.00%
001.1099.5410.000	REPAIRS & MAINTENANCE	5,157.49	1,500.00	25,590.15	29,000.00	17,000.00	-12,000.00	-41.38%
001.1099.5450.000	TELEPHONE/OTHER COMMNC	31,683.66	30,000.00	20,325.33	31,000.00	32,000.00	1,000.00	3.23%
001.1099.5481.000	ELECTRICITY	91,505.04	75,000.00	54,322.69	93,000.00	93,000.00	0.00	0.00%
001.1099.5482.000	NATURAL GAS	28,618.42	28,000.00	15,889.37	28,000.00	30,000.00	2,000.00	7.14%
001.1099.5485.000	STORM WATER FEES	2,290.29	2,290.00	2,290.29	2,290.00	2,290.00	0.00	0.00%
001.1099.5611.000	BLDG,GRD OPER/MAINT SPLY	3,787.22	0.00	631.92	1,500.00	1,500.00	0.00	0.00%
Total Function: 1099 - Police and Fire Building Exps:		**200,369.90**	**181,280.98**	**133,796.96**	**254,517.00**	**252,144.00**	**-2,373.00**	**-0.93%**
Function: 2010 - Roads, Bridges, Sidewalks								
001.2010.5010.010	REGULAR-NON UNION	73,096.48	77,497.00	51,432.64	78,497.00	81,981.00	3,484.00	4.44%
001.2010.5010.040	REGULAR-PPME UNION	510,255.52	660,264.00	357,703.76	670,264.00	668,532.00	-1,732.00	-0.26%
001.2010.5020.040	OVERTIME-PPME UNION	5,638.48	0.00	5,365.02	0.00	0.00	0.00	0.00%
001.2010.5030.070	PART-TIME TEMPORARY	0.00	4,000.00	0.00	4,000.00	4,000.00	0.00	0.00%
001.2010.5060.040	TERM PAYOUTS-PPME UNION	12,928.46	0.00	10,522.01	0.00	0.00	0.00	0.00%
001.2010.5061.040	RHSA PAYOUTS-PPME UNION	6,624.23	0.00	7,305.68	7,306.00	0.00	-7,306.00	-100.00%
001.2010.5101.010	SOCIAL SECURITY-NON UNION	4,383.10	4,805.00	3,083.74	4,867.00	5,083.00	216.00	4.44%
001.2010.5101.040	SOCIAL SECURITY-PPME UNIO	30,953.72	40,936.00	22,195.49	41,556.00	41,449.00	-107.00	-0.26%
001.2010.5101.070	SOCIAL SECURITY-PT TEMP	0.00	248.00	0.00	248.00	248.00	0.00	0.00%
001.2010.5102.010	MEDICARE-NON UNION	1,025.04	1,124.00	721.17	1,139.00	1,189.00	50.00	4.39%
001.2010.5102.040	MEDICARE-PPME UNION	7,239.13	9,574.00	5,190.76	9,719.00	9,694.00	-25.00	-0.26%
001.2010.5102.070	MEDICARE-TEMPORARY	0.00	58.00	0.00	58.00	58.00	0.00	0.00%
001.2010.5111.010	IPERS-NON UNION	6,900.34	7,316.00	4,760.82	7,316.00	7,739.00	423.00	5.78%
001.2010.5111.040	IPERS-PPME UNION	48,700.24	62,329.00	31,336.56	62,329.00	63,109.00	780.00	1.25%
001.2010.5121.010	GRP INSUR-NON UNION	13,970.04	15,376.00	10,044.04	16,169.00	17,149.00	980.00	6.06%
001.2010.5121.040	GRP INSUR-PPME UNION	123,425.31	164,076.00	81,758.62	172,519.00	182,587.00	10,068.00	5.84%
001.2010.5122.000	RETIREES GRP HLTH INS	30,840.06	33,853.00	22,754.54	34,406.00	39,547.00	5,141.00	14.94%
001.2010.5123.010	WORKCOMP-NON UNION	805.05	4,553.00	988.89	4,558.00	4,822.00	264.00	5.79%
001.2010.5123.040	WORKCOMP-PPME UNION	15,487.04	29,234.00	19,334.74	29,268.00	32,634.00	3,366.00	11.50%
001.2010.5123.070	WORKCOMP-TEMPORARY	0.00	235.00	0.00	235.00	235.00	0.00	0.00%

Budget Comparison Report

Account Number		2021-2022 Total Activity	2022-2023 Total Budget	2022-2023 YTD Activity Through Feb	Parent Budget 2022-2023 FY2023 Amend	Comparison 1 Budget 2023-2024 FY2024 Dept Request	Comparison 1 to Parent Budget Increase / (Decrease)	%
001.2010.5290.000	INSURANCE - GENERAL	23,584.49	26,122.00	178.00	31,384.00	35,666.00	4,282.00	13.64%
001.2010.5300.000	INSURANCE - TORT LIAB	9,440.13	12,859.00	0.00	10,817.00	12,980.00	2,163.00	20.00%
Total Function: 2010 - Roads, Bridges, Sidewalks:		**925,296.86**	**1,154,459.00**	**634,676.48**	**1,186,655.00**	**1,208,702.00**	**22,047.00**	**1.86%**
Function: 2011 - Sidewalks								
001.2011.5410.000	REPAIRS & MAINTENANCE	0.00	0.00	147.18	150.00	0.00	-150.00	-100.00%
Total Function: 2011 - Sidewalks:		**0.00**	**0.00**	**147.18**	**150.00**	**0.00**	**-150.00**	**-100.00%**
Function: 2020 - Parking								
001.2020.5010.010	REGULAR-NON UNION	2,906.65	2,672.00	1,654.50	2,672.00	0.00	-2,672.00	-100.00%
001.2020.5010.020	REGULAR-POLICE UNION	14,063.13	35,878.00	23,355.42	37,795.00	39,036.00	1,241.00	3.28%
001.2020.5020.020	OVERTIME-POLICE UNION	0.00	0.00	115.02	0.00	0.00	0.00	0.00%
001.2020.5060.020	TERM PAYOUTS-POLICE UNIOI	2,837.74	0.00	0.00	0.00	0.00	0.00	0.00%
001.2020.5101.010	SOCIAL SECURITY-NON UNION	171.55	166.00	97.47	166.00	0.00	-166.00	-100.00%
001.2020.5101.020	SOCIAL SECURITY-POLICE UNIC	1,011.50	2,224.00	1,414.16	2,343.00	2,420.00	77.00	3.29%
001.2020.5102.010	MEDICARE-NON UNION	40.14	39.00	22.83	39.00	0.00	-39.00	-100.00%
001.2020.5102.020	MEDICARE-POLICE UNION	236.58	520.00	330.74	549.00	566.00	17.00	3.10%
001.2020.5111.010	IPERS-NON UNION	274.38	252.00	156.17	252.00	0.00	-252.00	-100.00%
001.2020.5111.020	IPERS-POLICE UNION	1,327.55	3,387.00	2,121.25	3,473.00	3,685.00	212.00	6.10%
001.2020.5121.010	GRP INSUR-NON UNION	388.00	332.00	206.80	349.00	0.00	-349.00	-100.00%
001.2020.5121.020	GRP INSUR-POLICE UNION	3,324.00	15,376.00	4,511.17	6,843.00	7,253.00	410.00	5.99%
001.2020.5122.000	RETIREES GRP HLTH INS	1,340.86	1,418.00	0.00	0.00	0.00	0.00	0.00%
001.2020.5123.010	WORKCOMP-NON UNION	2.57	4.00	2.65	4.00	0.00	-4.00	-100.00%
001.2020.5123.020	WORKCOMP-POLICE UNION	242.71	995.00	624.11	1,022.00	1,084.00	62.00	6.07%
001.2020.5132.000	CLOTHING EXPENSE	81.60	500.00	473.47	500.00	500.00	0.00	0.00%
001.2020.5290.000	INSURANCE - GENERAL	352.41	404.00	0.00	400.00	480.00	80.00	20.00%
001.2020.5300.000	INSURANCE - TORT LIAB	372.54	433.00	0.00	217.00	260.00	43.00	19.82%
001.2020.5344.000	CONTRACT-MAINTENANCE	0.00	1,200.00	690.00	690.00	750.00	60.00	8.70%
001.2020.5360.000	POSTAGE & SHIPPING	0.00	10.00	0.00	10.00	10.00	0.00	0.00%
001.2020.5410.000	REPAIRS & MAINTENANCE	0.00	0.00	152.99	153.00	0.00	-153.00	-100.00%
001.2020.5450.000	TELEPHONE/OTHR COMMNCT	0.00	100.00	0.00	100.00	100.00	0.00	0.00%
001.2020.5481.000	ELECTRICITY	0.00	0.00	1,270.71	2,400.00	2,400.00	0.00	0.00%
001.2020.5485.000	STORM WATER FEES	5,030.89	5,031.00	4,646.86	4,647.00	4,647.00	0.00	0.00%
001.2020.5565.000	VEHICLE OPER/MAINT SPPLY	0.00	0.00	143.25	144.00	0.00	-144.00	-100.00%
001.2020.5570.000	VEHICLE GAS	723.66	1,650.00	1,998.66	3,385.00	4,200.00	815.00	24.08%
001.2020.5600.000	OPERATING SUPPLIES	1,555.85	1,900.00	145.13	1,900.00	1,900.00	0.00	0.00%
001.2020.5980.000	REFUNDS/REIMBURSEMENTS	30.00	0.00	75.00	75.00	0.00	-75.00	-100.00%
Total Function: 2020 - Parking:		**36,314.31**	**74,491.00**	**44,208.36**	**70,128.00**	**69,291.00**	**-837.00**	**-1.19%**
Function: 2030 - Street Lighting								
001.2030.5010.010	REGULAR-NON UNION	6,111.06	9,409.00	3,826.49	6,238.00	7,724.00	1,486.00	23.82%

Budget Comparison Report

Account Number		2021-2022 Total Activity	2022-2023 Total Budget	2022-2023 YTD Activity Through Feb	Parent Budget 2022-2023 FY2023 Amend	Comparison 1 Budget 2023-2024 FY2024 Dept Request	Comparison 1 to Parent Budget Increase / (Decrease)	%
001.2030.5010.040	REGULAR-PPME UNION	10,755.31	10,970.00	7,164.14	23,686.00	43,039.00	19,353.00	81.71%
001.2030.5020.010	OVERTIME-NON UNION	0.00	0.00	2.32	0.00	0.00	0.00	0.00%
001.2030.5020.040	OVERTIME-PPME UNION	147.32	0.00	4.11	0.00	0.00	0.00	0.00%
001.2030.5060.010	TERM PAYOUTS-NON UNION	854.77	0.00	0.00	0.00	0.00	0.00	0.00%
001.2030.5060.040	TERM PAYOUTS-PPME UNION	209.79	0.00	0.00	0.00	0.00	0.00	0.00%
001.2030.5061.040	RHSA PAYOUTS-PPME UNION	1,896.37	0.00	0.00	0.00	0.00	0.00	0.00%
001.2030.5101.010	SOCIAL SECURITY-NON UNION	426.65	583.00	237.35	387.00	479.00	92.00	23.77%
001.2030.5101.040	SOCIAL SECURITY-PPME UNIO	649.60	680.00	406.52	1,468.00	2,668.00	1,200.00	81.74%
001.2030.5102.010	MEDICARE-NON UNION	99.61	136.00	55.58	90.00	112.00	22.00	24.44%
001.2030.5102.040	MEDICARE-PPME UNION	151.92	159.00	95.06	343.00	624.00	281.00	81.92%
001.2030.5111.010	IPERS-NON UNION	577.06	888.00	352.06	579.00	729.00	150.00	25.91%
001.2030.5111.040	IPERS-PPME UNION	877.24	1,036.00	667.30	2,227.00	4,063.00	1,836.00	82.44%
001.2030.5121.010	GRP INSUR-NON UNION	5.63	0.00	11.23	0.00	0.00	0.00	0.00%
001.2030.5121.040	GRP INSUR-PPME UNION	2,407.75	3,075.00	1,678.06	4,635.00	11,318.00	6,683.00	144.19%
001.2030.5122.000	RETIREES GRP HLTH INS	237.68	383.00	250.18	386.00	442.00	56.00	14.51%
001.2030.5123.010	WORKCOMP-NON UNION	141.21	358.00	141.19	234.00	294.00	60.00	25.64%
001.2030.5123.040	WORKCOMP-PPME UNION	267.07	417.00	270.02	898.00	1,638.00	740.00	82.41%
001.2030.5151.000	PHYSICALS/IMMUNIZATIONS	51.00	0.00	5.50	50.00	0.00	-50.00	-100.00%
001.2030.5290.000	INSURANCE - GENERAL	951.50	1,053.00	0.00	1,266.00	1,519.00	253.00	19.98%
001.2030.5300.000	INSURANCE - TORT LIAB	977.64	1,084.00	0.00	1,092.00	1,310.00	218.00	19.96%
	Total Function: 2030 - Street Lighting:	**27,796.18**	**30,231.00**	**15,167.11**	**43,579.00**	**75,959.00**	**32,380.00**	**74.30%**
Function: 2040 - Traffic Safety								
001.2040.5010.010	REGULAR-NON UNION	36,561.43	56,457.00	17,502.93	22,083.00	7,724.00	-14,359.00	-65.02%
001.2040.5010.040	REGULAR-PPME UNION	64,633.18	65,822.00	25,692.54	51,612.00	43,039.00	-8,573.00	-16.61%
001.2040.5020.010	OVERTIME-NON UNION	0.00	0.00	13.91	0.00	0.00	0.00	0.00%
001.2040.5020.040	OVERTIME-PPME UNION	883.89	0.00	4.11	0.00	0.00	0.00	0.00%
001.2040.5030.070	PART-TIME TEMPORARY	150.00	0.00	0.00	0.00	0.00	0.00	0.00%
001.2040.5060.010	TERM PAYOUTS-NON UNION	5,128.63	0.00	0.00	0.00	0.00	0.00	0.00%
001.2040.5060.040	TERM PAYOUTS-PPME UNION	1,258.68	0.00	0.00	0.00	0.00	0.00	0.00%
001.2040.5061.040	RHSA PAYOUTS-PPME UNION	11,378.22	0.00	0.00	0.00	0.00	0.00	0.00%
001.2040.5101.010	SOCIAL SECURITY-NON UNION	2,551.92	3,500.00	1,086.15	1,369.00	479.00	-890.00	-65.01%
001.2040.5101.040	SOCIAL SECURITY-PPME UNIO	3,903.23	4,081.00	1,470.60	3,200.00	2,668.00	-532.00	-16.63%
001.2040.5101.070	SOCIAL SECURITY-PT TEMP	9.30	0.00	0.00	0.00	0.00	0.00	0.00%
001.2040.5102.010	MEDICARE-NON UNION	596.85	819.00	254.01	321.00	112.00	-209.00	-65.11%
001.2040.5102.040	MEDICARE-PPME UNION	912.78	954.00	343.89	749.00	624.00	-125.00	-16.69%
001.2040.5102.070	MEDICARE-TEMPORARY	2.18	0.00	0.00	0.00	0.00	0.00	0.00%
001.2040.5111.010	IPERS-NON UNION	3,451.25	5,329.00	1,596.88	2,028.00	729.00	-1,299.00	-64.05%
001.2040.5111.040	IPERS-PPME UNION	5,273.12	6,214.00	2,369.02	4,816.00	4,063.00	-753.00	-15.64%
001.2040.5121.010	GRP INSUR-NON UNION	0.00	0.00	67.38	0.00	0.00	0.00	0.00%

Budget Comparison Report

Account Number		2021-2022 Total Activity	2022-2023 Total Budget	2022-2023 YTD Activity Through Feb	Parent Budget 2022-2023 FY2023 Amend	Comparison 1 Budget 2023-2024 FY2024 Dept Request	Comparison 1 to Parent Budget Increase / (Decrease)	%
001.2040.5121.040	GRP INSUR-PPME UNION	14,479.85	18,452.00	5,576.68	10,025.00	11,318.00	1,293.00	12.90%
001.2040.5122.000	RETIREES GRP HLTH INS	1,425.92	2,299.00	1,501.00	2,340.00	2,693.00	353.00	15.09%
001.2040.5123.010	WORKCOMP-NON UNION	847.24	2,147.00	639.25	818.00	294.00	-524.00	-64.06%
001.2040.5123.040	WORKCOMP-PPME UNION	1,602.02	2,503.00	960.77	1,942.00	1,638.00	-304.00	-15.65%
001.2040.5123.070	WORKCOMP-TEMPORARY	3.01	0.00	0.00	0.00	0.00	0.00	0.00%
001.2040.5132.000	CLOTHING EXPENSE	115.56	200.00	0.00	200.00	200.00	0.00	0.00%
001.2040.5151.000	PHYSICALS/IMMUNIZATIONS	305.98	0.00	33.00	50.00	0.00	-50.00	-100.00%
001.2040.5230.000	CONSULTING & PROF FEES	0.00	0.00	30.60	31.00	0.00	-31.00	-100.00%
001.2040.5290.000	INSURANCE - GENERAL	5,573.65	6,236.00	0.00	7,147.00	8,576.00	1,429.00	19.99%
001.2040.5300.000	INSURANCE - TORT LIAB	1,007.06	1,507.00	0.00	970.00	1,164.00	194.00	20.00%
	Total Function: 2040 - Traffic Safety:	**162,054.95**	**176,520.00**	**59,142.72**	**109,701.00**	**85,321.00**	**-24,380.00**	**-22.22%**
Function: 2050 - Snow Removal								
001.2050.5010.010	REGULAR-NON UNION	764.06	0.00	269.60	0.00	0.00	0.00	0.00%
001.2050.5010.040	REGULAR-PPME UNION	38,934.49	0.00	46,766.27	0.00	0.00	0.00	0.00%
001.2050.5010.090	REGULAR-P&R UNION	3,192.51	0.00	5,286.40	0.00	0.00	0.00	0.00%
001.2050.5020.010	OVERTIME-NON UNION	0.00	0.00	462.45	0.00	0.00	0.00	0.00%
001.2050.5020.040	OVERTIME-PPME UNION	7,130.00	40,000.00	19,613.15	40,000.00	40,000.00	0.00	0.00%
001.2050.5020.090	OVERTIME-P&R UNION	0.00	0.00	449.07	0.00	0.00	0.00	0.00%
001.2050.5101.010	SOCIAL SECURITY-NON UNION	45.90	0.00	43.60	0.00	0.00	0.00	0.00%
001.2050.5101.040	SOCIAL SECURITY-PPME UNIO	2,690.52	3,060.00	3,927.57	3,060.00	3,060.00	0.00	0.00%
001.2050.5101.090	SOCIAL SECURITY-P&R UNION	180.68	0.00	327.02	0.00	0.00	0.00	0.00%
001.2050.5102.010	MEDICARE-NON UNION	10.74	0.00	10.20	0.00	0.00	0.00	0.00%
001.2050.5102.040	MEDICARE-PPME UNION	629.21	580.00	918.68	580.00	580.00	0.00	0.00%
001.2050.5102.090	MEDICARE-P&R UNION	42.26	0.00	76.49	0.00	0.00	0.00	0.00%
001.2050.5111.010	IPERS-NON UNION	72.13	0.00	69.10	0.00	0.00	0.00	0.00%
001.2050.5111.040	IPERS-PPME UNION	4,348.48	0.00	6,167.27	0.00	0.00	0.00	0.00%
001.2050.5111.090	IPERS-P&R UNION	301.34	0.00	541.46	0.00	0.00	0.00	0.00%
001.2050.5121.010	GRP INSUR-NON UNION	68.65	0.00	107.45	0.00	0.00	0.00	0.00%
001.2050.5121.040	GRP INSUR-PPME UNION	11,594.37	0.00	15,788.72	0.00	0.00	0.00	0.00%
001.2050.5121.090	GRP INSUR-P&R UNION	889.87	0.00	1,991.57	0.00	0.00	0.00	0.00%
001.2050.5123.010	WORKCOMP-NON UNION	15.16	0.00	29.78	0.00	0.00	0.00	0.00%
001.2050.5123.040	WORKCOMP-PPME UNION	1,032.76	0.00	2,703.25	0.00	0.00	0.00	0.00%
001.2050.5123.090	WORKCOMP-P&R UNION	71.55	0.00	233.35	0.00	0.00	0.00	0.00%
001.2050.5300.000	INSURANCE - TORT LIAB	1,817.67	1,294.00	0.00	1,154.00	1,385.00	231.00	20.02%
	Total Function: 2050 - Snow Removal:	**73,832.35**	**44,934.00**	**105,782.45**	**44,794.00**	**45,025.00**	**231.00**	**0.52%**
Function: 2055 - Tree Removal								
001.2055.5010.010	REGULAR-NON UNION	2,678.51	0.00	1,867.09	0.00	0.00	0.00	0.00%
001.2055.5101.010	SOCIAL SECURITY-NON UNION	157.88	0.00	110.56	0.00	0.00	0.00	0.00%
001.2055.5102.010	MEDICARE-NON UNION	36.90	0.00	25.94	0.00	0.00	0.00	0.00%

Budget Comparison Report

Account Number		2021-2022 Total Activity	2022-2023 Total Budget	2022-2023 YTD Activity Through Feb	Parent Budget 2022-2023 FY2023 Amend	Comparison 1 Budget 2023-2024 FY2024 Dept Request	Comparison 1 to Parent Budget Increase / (Decrease)	%
001.2055.5111.010	IPERS-NON UNION	252.88	0.00	172.59	0.00	0.00	0.00	0.00%
001.2055.5121.010	GRP INSUR-NON UNION	558.92	0.00	401.78	0.00	0.00	0.00	0.00%
001.2055.5123.010	WORKCOMP-NON UNION	43.28	0.00	53.08	0.00	0.00	0.00	0.00%
	Total Function: 2055 - Tree Removal:	**3,728.37**	**0.00**	**2,631.04**	**0.00**	**0.00**	**0.00**	**0.00%**
Function: 2060 - Highway Engineering								
001.2060.5010.010	REGULAR-NON UNION	309,451.70	281,058.00	150,941.50	249,287.00	296,628.00	47,341.00	18.99%
001.2060.5030.070	PART-TIME TEMPORARY	14,793.50	6,000.00	8,141.25	15,500.00	15,000.00	-500.00	-3.23%
001.2060.5060.010	TERM PAYOUTS-NON UNION	5,588.53	0.00	0.00	0.00	0.00	0.00	0.00%
001.2060.5101.010	SOCIAL SECURITY-NON UNION	18,746.66	17,426.00	9,014.06	15,456.00	18,391.00	2,935.00	18.99%
001.2060.5101.070	SOCIAL SECURITY-PT TEMP	917.23	372.00	504.79	961.00	930.00	-31.00	-3.23%
001.2060.5102.010	MEDICARE-NON UNION	4,384.26	4,075.00	2,108.22	3,615.00	4,301.00	686.00	18.98%
001.2060.5102.070	MEDICARE-TEMPORARY	214.56	87.00	118.05	225.00	218.00	-7.00	-3.11%
001.2060.5111.010	IPERS-NON UNION	29,212.43	26,532.00	13,859.16	23,143.00	28,002.00	4,859.00	21.00%
001.2060.5111.070	IPERS-PT TEMP	615.13	566.00	446.67	1,416.00	661.00	-755.00	-53.32%
001.2060.5121.010	GRP INSUR-NON UNION	54,781.08	54,772.00	25,768.15	46,813.00	61,082.00	14,269.00	30.48%
001.2060.5123.010	WORKCOMP-NON UNION	3,110.24	4,999.00	2,591.39	4,301.00	5,282.00	981.00	22.81%
001.2060.5123.070	WORKCOMP-TEMPORARY	96.98	10.00	64.80	25.00	25.00	0.00	0.00%
001.2060.5230.000	CONSULTING & PROF FEES	1,305.00	3,500.00	1,620.00	3,500.00	3,500.00	0.00	0.00%
001.2060.5290.000	INSURANCE - GENERAL	1,836.07	2,002.00	0.00	2,359.00	2,831.00	472.00	20.01%
001.2060.5300.000	INSURANCE - TORT LIAB	2,465.34	3,029.00	0.00	2,426.00	2,911.00	485.00	19.99%
001.2060.5344.000	CONTRACT-MAINTENANCE	293.24	250.00	158.94	250.00	250.00	0.00	0.00%
001.2060.5360.000	POSTAGE & SHIPPING	0.00	0.00	27.50	40.00	50.00	10.00	25.00%
	Total Function: 2060 - Highway Engineering:	**447,811.95**	**404,678.00**	**215,364.48**	**369,317.00**	**440,062.00**	**70,745.00**	**19.16%**
Function: 2080 - Airport								
001.2080.5230.000	CONSULTING & PROF FEES	360.00	0.00	0.00	0.00	0.00	0.00	0.00%
001.2080.5251.000	LICENSE & PERMITS	130.00	705.00	130.00	130.00	130.00	0.00	0.00%
001.2080.5290.000	INSURANCE - GENERAL	12,408.67	14,392.00	6,769.00	22,215.00	26,658.00	4,443.00	20.00%
001.2080.5300.000	INSURANCE - TORT LIAB	307.10	282.00	0.00	311.00	373.00	62.00	19.94%
001.2080.5342.000	CONTRACT-OUTSIDE HELP	18,157.28	31,000.00	18,664.00	31,000.00	32,500.00	1,500.00	4.84%
001.2080.5344.000	CONTRACT-MAINTENANCE	8,649.00	30,000.00	17,264.00	30,000.00	30,000.00	0.00	0.00%
001.2080.5410.000	REPAIRS & MAINTENANCE	19,592.61	15,000.00	4,725.01	15,000.00	15,000.00	0.00	0.00%
001.2080.5440.000	TAXES PAID	0.00	2,200.00	0.00	0.00	0.00	0.00	0.00%
001.2080.5450.000	TELEPHONE/OTHR COMMNCT	1,290.21	450.00	240.40	400.00	450.00	50.00	12.50%
001.2080.5481.000	ELECTRICITY	2,220.87	5,000.00	5,929.44	10,000.00	10,000.00	0.00	0.00%
001.2080.5483.000	WATER	2,032.02	2,000.00	1,112.32	2,000.00	2,000.00	0.00	0.00%
001.2080.5484.000	PROPANE	3,998.09	3,000.00	10,232.00	9,000.00	9,000.00	0.00	0.00%
001.2080.5565.000	VEHICLE OPER/MAINT SPPLY	1,404.28	2,200.00	1,507.85	2,200.00	2,200.00	0.00	0.00%
001.2080.5571.000	VEHICLE DIESEL FUEL	4,873.85	5,000.00	4,416.57	6,500.00	6,500.00	0.00	0.00%
001.2080.5600.000	OPERATING SUPPLIES	4,611.01	3,000.00	257.25	3,000.00	3,000.00	0.00	0.00%

Budget Comparison Report

Account Number		2021-2022 Total Activity	2022-2023 Total Budget	2022-2023 YTD Activity Through Feb	Parent Budget 2022-2023 FY2023 Amend	Comparison 1 Budget 2023-2024 FY2024 Dept Request	Comparison 1 to Parent Budget Increase / (Decrease)	%
001.2080.5718.000	MINOR EQUIP, UNCLASSIFIED	3,462.25	0.00	0.00	0.00	0.00	0.00	0.00%
001.2080.5776.000	BUILDINGS & IMPROVEMENTS	6,873.13	2,000.00	175.00	2,000.00	2,000.00	0.00	0.00%
001.2080.5980.000	REFUNDS/REIMB	0.00	0.00	277.15	278.00	0.00	-278.00	-100.00%
	Total Function: 2080 - Airport:	**90,370.37**	**116,229.00**	**71,699.99**	**134,034.00**	**139,811.00**	**5,777.00**	**4.31%**
Function: 2090 - Garbage								
001.2090.5220.000	COLLECTION COSTS/REFUNDS	3,070.20	3,500.00	1,811.85	3,500.00	3,500.00	0.00	0.00%
001.2090.5331.000	PAYMENTS-OTHER ENTITIES	110,364.00	110,208.00	55,182.00	110,208.00	110,208.00	0.00	0.00%
	Total Function: 2090 - Garbage:	**113,434.20**	**113,708.00**	**56,993.85**	**113,708.00**	**113,708.00**	**0.00**	**0.00%**
Function: 2095 - Mosquito/Pest Control								
001.2095.5616.000	MOSQUITO SPRAYING	0.00	4,000.00	0.00	4,000.00	4,000.00	0.00	0.00%
	Total Function: 2095 - Mosquito/Pest Control:	**0.00**	**4,000.00**	**0.00**	**4,000.00**	**4,000.00**	**0.00**	**0.00%**
Function: 4010 - Library Services								
001.4010.5010.010	REGULAR-NON UNION	527,676.95	550,914.00	361,660.13	558,914.00	571,108.00	12,194.00	2.18%
001.4010.5050.060	PART-TIME REGULAR	152,227.12	239,906.00	124,243.94	243,477.00	242,875.00	-602.00	-0.25%
001.4010.5060.010	TERM PAYOUTS-NON UNION	0.00	0.00	3,412.58	0.00	0.00	0.00	0.00%
001.4010.5061.010	RHSA PAYOUTS-NON UNION	0.00	0.00	0.00	9,400.00	0.00	-9,400.00	-100.00%
001.4010.5101.010	SOCIAL SECURITY-NON UNION	31,352.77	34,157.00	21,740.88	34,653.00	35,409.00	756.00	2.18%
001.4010.5101.060	SOCIAL SECURITY-PT REGULAR	9,447.80	14,874.00	7,721.63	15,096.00	15,058.00	-38.00	-0.25%
001.4010.5101.070	SOCIAL SECURITY-PT TEMP	5.39	0.00	0.00	0.00	0.00	0.00	0.00%
001.4010.5102.010	MEDICARE-NON UNION	7,332.47	7,988.00	5,084.57	8,104.00	8,281.00	177.00	2.18%
001.4010.5102.060	MEDICARE-PT REGULAR	2,209.62	3,479.00	1,805.95	3,530.00	3,522.00	-8.00	-0.23%
001.4010.5102.070	MEDICARE-TEMPORARY	1.26	0.00	0.00	0.00	0.00	0.00	0.00%
001.4010.5111.010	IPERS-NON UNION	49,812.71	52,006.00	33,385.29	52,006.00	53,913.00	1,907.00	3.67%
001.4010.5111.060	IPERS-PT REGULAR	13,779.19	22,647.00	10,567.26	22,418.00	22,927.00	509.00	2.27%
001.4010.5111.070	IPERS-PT TEMP	-43.57	0.00	0.00	0.00	0.00	0.00	0.00%
001.4010.5121.010	GRP INSUR-NON UNION	71,496.12	78,693.00	48,673.72	82,721.00	87,713.00	4,992.00	6.03%
001.4010.5122.000	RETIREES GRP HLTH INS	3,480.72	3,831.00	2,501.62	3,893.00	4,474.00	581.00	14.92%
001.4010.5123.010	WORKCOMP-NON UNION	469.52	899.00	583.59	900.00	933.00	33.00	3.67%
001.4010.5123.060	WORKCOMP-PT REGULAR	135.69	392.00	193.78	388.00	397.00	9.00	2.32%
001.4010.5123.070	WORKCOMP-TEMPORARY	0.08	0.00	0.00	0.00	0.00	0.00	0.00%
001.4010.5151.000	PHYSICALS/IMMUNIZATIONS	1,063.00	800.00	601.00	800.00	800.00	0.00	0.00%
001.4010.5210.000	ADVERTISING & LEGAL PUB	95.76	200.00	870.00	200.00	200.00	0.00	0.00%
001.4010.5215.000	BANK CHARGES	831.65	700.00	152.63	700.00	700.00	0.00	0.00%
001.4010.5216.000	BACKGROUND CHECKS	138.00	120.00	90.00	120.00	120.00	0.00	0.00%
001.4010.5251.000	LICENSE & PERMITS	469.00	750.00	2,106.00	2,850.00	750.00	-2,100.00	-73.68%
001.4010.5280.000	DUES, MEMBER, SUBSCRIPTN	1,326.00	1,600.00	503.00	1,600.00	1,600.00	0.00	0.00%
001.4010.5290.000	INSURANCE - GENERAL	14,436.36	18,972.00	0.00	22,746.00	27,295.00	4,549.00	20.00%
001.4010.5300.000	INSURANCE - TORT LIAB	5,096.59	6,294.00	0.00	5,195.00	6,234.00	1,039.00	20.00%

Budget Comparison Report

Account Number		2021-2022 Total Activity	2022-2023 Total Budget	2022-2023 YTD Activity Through Feb	Parent Budget 2022-2023 FY2023 Amend	Comparison 1 Budget 2023-2024 FY2024 Dept Request	Comparison 1 to Parent Budget Increase / (Decrease)	%
001.4010.5342.000	CONTRACT-OUTSIDE HELP	25,460.69	28,600.00	17,560.24	28,600.00	28,600.00	0.00	0.00%
001.4010.5343.000	CONTRACT-PROMOTIONS/PGI	6,248.06	6,500.00	1,178.76	6,500.00	6,500.00	0.00	0.00%
001.4010.5344.000	CONTRACT-MAINTENANCE	26,582.94	20,000.00	16,128.63	20,000.00	20,000.00	0.00	0.00%
001.4010.5347.000	CONTRACT-SOFTWARE MAINT	14,369.61	15,000.00	7,190.04	15,000.00	15,000.00	0.00	0.00%
001.4010.5360.000	POSTAGE & SHIPPING	2,050.10	2,000.00	86.39	2,000.00	2,000.00	0.00	0.00%
001.4010.5370.000	PRINTING & BINDING	70.45	300.00	0.00	300.00	300.00	0.00	0.00%
001.4010.5380.000	RENTS & LEASES	360.00	400.00	0.00	400.00	400.00	0.00	0.00%
001.4010.5386.000	CONTRACT LAWN CARE	4,000.80	4,400.00	2,180.00	4,400.00	4,400.00	0.00	0.00%
001.4010.5410.000	REPAIRS & MAINTENANCE	8,837.61	9,000.00	2,913.09	9,000.00	9,000.00	0.00	0.00%
001.4010.5450.000	TELEPHONE/OTHR COMMNCT	6,365.47	6,800.00	4,672.23	6,800.00	6,800.00	0.00	0.00%
001.4010.5460.000	CONFERENCE EXPENSE	705.00	500.00	436.37	500.00	500.00	0.00	0.00%
001.4010.5461.000	TRAVEL-AIRFARE	497.20	0.00	0.00	0.00	0.00	0.00	0.00%
001.4010.5464.000	TRAVEL-PER DIEM	0.00	200.00	0.00	200.00	200.00	0.00	0.00%
001.4010.5465.000	TRAVEL - HOTEL/MOTEL	0.00	500.00	378.82	500.00	500.00	0.00	0.00%
001.4010.5481.000	ELECTRICITY	41,254.69	40,000.00	30,498.17	45,000.00	45,000.00	0.00	0.00%
001.4010.5482.000	NATURAL GAS	7,692.84	9,500.00	4,067.21	10,500.00	10,500.00	0.00	0.00%
001.4010.5485.000	STORM WATER FEES	1,100.79	1,101.00	1,100.79	1,101.00	1,101.00	0.00	0.00%
001.4010.5565.000	VEHICLE OPER/MAINT SPPLY	0.00	1,000.00	0.00	1,000.00	2,000.00	1,000.00	100.00%
001.4010.5570.000	VEHICLE GAS	0.00	3,000.00	0.00	3,000.00	5,000.00	2,000.00	66.67%
001.4010.5600.000	OPERATING SUPPLIES	17,859.59	26,000.00	8,635.17	24,000.00	24,000.00	0.00	0.00%
001.4010.5601.000	PROMOTION/PROGRAM SPPL'	3,045.65	2,500.00	1,924.20	2,500.00	2,500.00	0.00	0.00%
001.4010.5605.000	OFFICE SUPPLIES	1,623.52	1,500.00	1,033.62	1,500.00	1,500.00	0.00	0.00%
001.4010.5611.000	BLDG,GRD OPER/MAINT SPLY	1,500.24	0.00	475.75	1,500.00	1,500.00	0.00	0.00%
001.4010.5612.000	COMPUTER COMPONENTS	43.50	500.00	0.00	500.00	500.00	0.00	0.00%
001.4010.5703.000	MINOR COMPUTER	11,786.98	7,000.00	2,864.63	7,000.00	7,000.00	0.00	0.00%
001.4010.5704.000	MINOR SOFTWARE <$5,000	445.00	0.00	1,908.57	2,000.00	0.00	-2,000.00	-100.00%
001.4010.5718.000	MINOR EQUIP, UNCLASSFIED	30,523.58	13,930.00	3,241.64	13,930.00	13,930.00	0.00	0.00%
001.4010.5730.000	REFERENCE MATERIALS	8,470.01	8,500.00	2,822.49	8,500.00	8,500.00	0.00	0.00%
001.4010.5731.000	LIBRARY PERIODICALS	6,460.73	9,000.00	3,731.77	9,000.00	9,000.00	0.00	0.00%
001.4010.5732.000	LIBRARY BOOKS, FILM RCRD	101,782.44	111,000.00	49,148.09	111,000.00	111,000.00	0.00	0.00%
001.4010.5734.000	LOST BOOKS	9,095.79	7,100.00	3,657.77	7,100.00	7,100.00	0.00	0.00%
001.4010.5736.000	LIBRARY DATABASES	29,086.52	24,000.00	9,438.20	24,000.00	24,000.00	0.00	0.00%
001.4010.5980.000	REFUNDS/REIMB	183.13	0.00	171.51	125.00	0.00	-125.00	-100.00%
001.4010.5990.000	CASH SHORT & (OVER)	-6.91	0.00	0.03	0.00	0.00	0.00	0.00%
	Total Function: 4010 - Library Services:	**1,260,336.22**	**1,399,053.00**	**803,341.75**	**1,437,167.00**	**1,452,640.00**	**15,473.00**	**1.08%**
Function: 4020 - Museum, Band, Theater								
001.4020.5331.000	PAYMENTS-OTHER ENTITIES	11,263.76	11,000.00	6,093.96	11,000.00	9,000.00	-2,000.00	-18.18%
	Total Function: 4020 - Museum, Band, Theater:	**11,263.76**	**11,000.00**	**6,093.96**	**11,000.00**	**9,000.00**	**-2,000.00**	**-18.18%**

Budget Comparison Report

Account Number		2021-2022 Total Activity	2022-2023 Total Budget	2022-2023 YTD Activity Through Feb	Parent Budget 2022-2023 FY2023 Amend	Comparison 1 Budget 2023-2024 FY2024 Dept Request	Comparison 1 to Parent Budget Increase / (Decrease)	%
Function: 4030 - Parks								
001.4030.5010.010	REGULAR-NON UNION	112,758.71	107,883.00	79,222.42	123,499.00	128,879.00	5,380.00	4.36%
001.4030.5010.090	REGULAR-P&R UNION	185,539.50	187,876.00	119,809.97	202,770.00	207,265.00	4,495.00	2.22%
001.4030.5020.090	OVERTIME-P&R UNION	329.50	1,000.00	301.34	1,000.00	1,000.00	0.00	0.00%
001.4030.5030.070	PART-TIME TEMPORARY	23,553.44	28,000.00	17,014.93	39,313.00	39,786.00	473.00	1.20%
001.4030.5050.060	PART-TIME REGULAR	0.00	12,874.00	225.11	0.00	0.00	0.00	0.00%
001.4030.5056.040	OTHR DEPT-PPME UNION	2,281.03	0.00	962.51	0.00	0.00	0.00	0.00%
001.4030.5060.090	TERM PAYOUTS-P&R UNION	0.00	0.00	716.09	0.00	0.00	0.00	0.00%
001.4030.5101.010	SOCIAL SECURITY-NON UNION	6,773.81	6,689.00	4,738.83	7,657.00	7,991.00	334.00	4.36%
001.4030.5101.040	SOCIAL SECURITY-PPME UNIOI	135.71	0.00	58.22	0.00	0.00	0.00	0.00%
001.4030.5101.060	SOCIAL SECURITY-PT REGULAR	0.00	798.00	13.96	0.00	0.00	0.00	0.00%
001.4030.5101.070	SOCIAL SECURITY-PT TEMP	1,460.30	1,736.00	1,054.95	2,437.00	2,467.00	30.00	1.23%
001.4030.5101.090	SOCIAL SECURITY-P&R UNION	10,719.06	11,648.00	6,927.93	12,572.00	12,850.00	278.00	2.21%
001.4030.5102.010	MEDICARE-NON UNION	1,584.31	1,565.00	1,108.26	1,790.00	1,869.00	79.00	4.41%
001.4030.5102.040	MEDICARE-PPME UNION	31.75	0.00	13.61	0.00	0.00	0.00	0.00%
001.4030.5102.060	MEDICARE-PT REGULAR	0.00	187.00	3.26	0.00	0.00	0.00	0.00%
001.4030.5102.070	MEDICARE-TEMPORARY	341.52	406.00	246.71	570.00	577.00	7.00	1.23%
001.4030.5102.090	MEDICARE-P&R UNION	2,506.96	2,723.00	1,620.33	2,940.00	3,005.00	65.00	2.21%
001.4030.5111.010	IPERS-NON UNION	10,721.77	10,184.00	7,323.85	11,500.00	12,166.00	666.00	5.79%
001.4030.5111.040	IPERS-PPME UNION	215.34	0.00	90.87	0.00	0.00	0.00	0.00%
001.4030.5111.060	IPERS-PT REGULAR	0.00	1,215.00	0.00	0.00	0.00	0.00	0.00%
001.4030.5111.070	IPERS-PT TEMP	934.25	0.00	567.03	567.00	1,113.00	546.00	96.30%
001.4030.5111.090	IPERS-P&R UNION	17,545.89	17,736.00	10,960.87	18,764.00	19,566.00	802.00	4.27%
001.4030.5121.010	GRP INSUR-NON UNION	19,261.05	19,289.00	13,962.38	23,187.00	24,555.00	1,368.00	5.90%
001.4030.5121.040	GRP INSUR-PPME UNION	446.44	0.00	211.51	0.00	0.00	0.00	0.00%
001.4030.5121.090	GRP INSUR-P&R UNION	46,937.45	49,565.00	33,633.59	54,556.00	66,822.00	12,266.00	22.48%
001.4030.5122.000	RETIREES GRP HLTH INS	15,190.46	15,325.00	10,614.56	18,553.00	22,371.00	3,818.00	20.58%
001.4030.5123.010	WORKCOMP-NON UNION	1,081.35	2,486.00	1,342.04	2,895.00	3,069.00	174.00	6.01%
001.4030.5123.040	WORKCOMP-PPME UNION	29.02	0.00	22.02	0.00	0.00	0.00	0.00%
001.4030.5123.060	WORKCOMP-PT REGULAR	0.00	374.00	5.57	0.00	0.00	0.00	0.00%
001.4030.5123.070	WORKCOMP-TEMPORARY	336.24	813.00	468.83	1,143.00	1,157.00	14.00	1.22%
001.4030.5123.090	WORKCOMP-P&R UNION	2,999.97	5,457.00	3,397.61	5,781.00	6,028.00	247.00	4.27%
001.4030.5132.000	CLOTHING EXPENSE	2,943.46	2,000.00	1,755.74	2,000.00	2,000.00	0.00	0.00%
001.4030.5132.010	CIOTHING EXPENSES NON UNI	145.94	200.00	0.00	200.00	200.00	0.00	0.00%
001.4030.5151.000	PHYSICALS/IMMUNIZATIONS	0.00	500.00	143.00	500.00	500.00	0.00	0.00%
001.4030.5192.070	UNEMPLOYMENT-TEMPORAR'	0.00	3,000.00	2,940.00	3,000.00	3,000.00	0.00	0.00%
001.4030.5215.000	BANK CHARGES	7,406.72	5,000.00	-2,790.86	7,000.00	5,000.00	-2,000.00	-28.57%
001.4030.5216.000	BACKGROUND CHECKS	0.00	150.00	0.00	150.00	150.00	0.00	0.00%
001.4030.5230.000	CONSULTING & PROF FEES	630.00	4,000.00	1,935.00	4,000.00	4,000.00	0.00	0.00%

Budget Comparison Report

Account Number		2021-2022 Total Activity	2022-2023 Total Budget	2022-2023 YTD Activity Through Feb	Parent Budget 2022-2023 FY2023 Amend	Comparison 1 Budget 2023-2024 FY2024 Dept Request	Comparison 1 to Parent Budget Increase / (Decrease)	%
001.4030.5251.000	LICENSE & PERMITS	1,058.00	500.00	376.50	500.00	500.00	0.00	0.00%
001.4030.5280.000	DUES, MEMBER, SUBSCRIPTN	815.00	500.00	180.00	500.00	500.00	0.00	0.00%
001.4030.5290.000	INSURANCE - GENERAL	14,664.19	15,971.00	0.00	15,476.00	18,571.00	3,095.00	20.00%
001.4030.5300.000	INSURANCE - TORT LIAB	5,521.89	5,592.00	0.00	6,631.00	7,957.00	1,326.00	20.00%
001.4030.5339.000	MEDICAL CLAIMS PAID BY CITY	313.20	200.00	237.76	200.00	200.00	0.00	0.00%
001.4030.5342.000	CONTRACT-OUTSIDE HELP	22,899.74	17,500.00	9,873.92	17,500.00	17,500.00	0.00	0.00%
001.4030.5344.000	CONTRACT-MAINTENANCE	2,125.46	1,900.00	1,651.32	1,900.00	1,900.00	0.00	0.00%
001.4030.5360.000	POSTAGE & SHIPPING	19.95	50.00	0.00	50.00	50.00	0.00	0.00%
001.4030.5370.000	PRINTING & BINDING	310.50	350.00	0.00	350.00	350.00	0.00	0.00%
001.4030.5380.000	RENTS & LEASES	1,725.00	1,000.00	2,269.00	2,500.00	1,000.00	-1,500.00	-60.00%
001.4030.5386.000	CONTRACT LAWN CARE	27,269.03	38,000.00	25,480.80	38,000.00	36,400.00	-1,600.00	-4.21%
001.4030.5410.000	REPAIRS & MAINTENANCE	5,461.15	5,000.00	1,832.88	3,500.00	4,000.00	500.00	14.29%
001.4030.5450.000	TELEPHONE/OTHR COMMNCT	533.01	400.00	587.28	500.00	500.00	0.00	0.00%
001.4030.5460.000	CONFERENCE EXPENSE	18.51	1,000.00	640.00	1,000.00	1,000.00	0.00	0.00%
001.4030.5463.000	TRAVEL-MOVING REIMBRSMT	819.04	0.00	0.00	0.00	0.00	0.00	0.00%
001.4030.5465.000	TRAVEL- HOTEL/MOTEL	800.30	350.00	0.00	350.00	350.00	0.00	0.00%
001.4030.5481.000	ELECTRICITY	17,254.59	13,000.00	11,643.35	20,000.00	20,000.00	0.00	0.00%
001.4030.5482.000	NATURAL GAS	2,969.90	2,600.00	2,170.40	3,000.00	3,000.00	0.00	0.00%
001.4030.5483.000	WATER	649.31	1,200.00	37.96	1,200.00	1,200.00	0.00	0.00%
001.4030.5485.000	STORM WATER FEES	6,230.31	6,065.00	6,118.51	6,120.00	6,120.00	0.00	0.00%
001.4030.5489.000	SAFETY EQUIP/SUPPLIES	959.10	500.00	201.44	500.00	500.00	0.00	0.00%
001.4030.5562.000	GROUNDS EQUIP MAINT SPLY	1,549.26	1,500.00	309.91	1,500.00	1,500.00	0.00	0.00%
001.4030.5565.000	VEHICLE OPER/MAINT SPPLY	8,506.84	7,500.00	9,644.71	10,000.00	10,000.00	0.00	0.00%
001.4030.5570.000	VEHICLE GAS	9,634.33	7,000.00	8,336.64	9,000.00	10,000.00	1,000.00	11.11%
001.4030.5571.000	VEHICLE DIESEL FUEL	4,419.14	5,000.00	4,925.49	5,000.00	5,000.00	0.00	0.00%
001.4030.5600.000	OPERATING SUPPLIES	14,966.55	6,500.00	4,295.17	5,500.00	5,500.00	0.00	0.00%
001.4030.5601.000	PROMOTION/PROGRAM SPPLY	1,200.00	0.00	0.00	0.00	0.00	0.00	0.00%
001.4030.5605.000	OFFICE SUPPLIES	31.89	0.00	49.99	0.00	0.00	0.00	0.00%
001.4030.5609.000	AGRICULTURAL SUPPLIES	2,878.83	1,300.00	14.99	1,300.00	1,300.00	0.00	0.00%
001.4030.5611.000	BLDG,GRD OPER/MAINT SPLY	10,629.63	11,000.00	4,094.12	10,000.00	11,000.00	1,000.00	10.00%
001.4030.5612.000	COMPUTER COMPONENTS	0.00	0.00	178.83	0.00	0.00	0.00	0.00%
001.4030.5702.000	MINOR OFFICE FURN/EQUIP	659.96	0.00	0.00	0.00	0.00	0.00	0.00%
001.4030.5718.000	MINOR EQUIP, UNCLASSFIED	2,050.14	3,000.00	5,206.51	3,000.00	3,000.00	0.00	0.00%
001.4030.5980.000	REFUNDS/REIMB	865.00	1,500.00	1,475.00	1,500.00	1,500.00	0.00	0.00%
	Total Function: 4030 - Parks:	**644,649.70**	**656,657.00**	**422,454.52**	**714,921.00**	**747,784.00**	**32,863.00**	**4.60%**
Function: 4040 - Recreation								
001.4040.5010.010	REGULAR-NON UNION	107,458.14	111,206.00	75,893.93	113,506.00	119,467.00	5,961.00	5.25%
001.4040.5030.070	PART-TIME TEMPORARY	0.00	2,000.00	0.00	0.00	0.00	0.00	0.00%
001.4040.5101.010	SOCIAL SECURITY-NON UNION	6,572.80	6,895.00	4,555.93	7,038.00	7,407.00	369.00	5.24%

Budget Comparison Report

Account Number		2021-2022 Total Activity	2022-2023 Total Budget	2022-2023 YTD Activity Through Feb	Parent Budget 2022-2023 FY2023 Amend	Comparison 1 Budget 2023-2024 FY2024 Dept Request	Comparison 1 to Parent Budget Increase / (Decrease)	%
001.4040.5101.070	SOCIAL SECURITY-PT TEMP	0.00	124.00	0.00	124.00	0.00	-124.00	-100.00%
001.4040.5102.010	MEDICARE-NON UNION	1,537.28	1,612.00	1,065.61	1,645.00	1,732.00	87.00	5.29%
001.4040.5102.070	MEDICARE-TEMPORARY	0.00	29.00	0.00	29.00	0.00	-29.00	-100.00%
001.4040.5111.010	IPERS-NON UNION	10,360.72	10,498.00	6,947.44	10,498.00	11,278.00	780.00	7.43%
001.4040.5121.010	GRP INSUR-NON UNION	14,214.74	15,675.00	10,238.52	16,481.00	17,478.00	997.00	6.05%
001.4040.5123.010	WORKCOMP-NON UNION	279.93	2,587.00	341.26	2,590.00	2,800.00	210.00	8.11%
001.4040.5123.070	WORKCOMP-TEMPORARY	0.00	58.00	0.00	58.00	0.00	-58.00	-100.00%
001.4040.5132.000	CLOTHING EXPENSE	475.97	200.00	0.00	200.00	200.00	0.00	0.00%
001.4040.5210.000	ADVERTISING & LEGAL PUB	133.30	300.00	28.28	300.00	300.00	0.00	0.00%
001.4040.5216.000	BACKGROUND CHECKS	45.00	50.00	85.00	50.00	50.00	0.00	0.00%
001.4040.5230.000	CONSULTING & PROF FEES	275.00	0.00	275.00	275.00	275.00	0.00	0.00%
001.4040.5280.000	DUES, MEMBER, SUBSCRIPTN	78.33	750.00	355.00	750.00	750.00	0.00	0.00%
001.4040.5342.000	CONTRACT-OUTSIDE HELP	0.00	0.00	1,755.00	1,755.00	0.00	-1,755.00	-100.00%
001.4040.5344.000	CONTRACT-MAINTENANCE	4,614.00	4,500.00	0.00	4,500.00	4,500.00	0.00	0.00%
001.4040.5358.000	RECR SRV-INSTRUCTR	10,707.50	9,000.00	4,745.00	9,000.00	9,000.00	0.00	0.00%
001.4040.5360.000	POSTAGE & SHIPPING	27.56	100.00	141.00	100.00	100.00	0.00	0.00%
001.4040.5370.000	PRINTING & BINDING	0.00	400.00	0.00	400.00	400.00	0.00	0.00%
001.4040.5380.000	RENTS & LEASES	0.00	500.00	0.00	500.00	500.00	0.00	0.00%
001.4040.5410.000	REPAIRS & MAINTENANCE	0.00	100.00	13.62	100.00	100.00	0.00	0.00%
001.4040.5441.000	SALES TAXES PAID/RECEIVED	-2,383.03	0.00	2,361.55	2,400.00	2,400.00	0.00	0.00%
001.4040.5442.000	LOST TAXES PAID/RECEIVED	-210.48	0.00	38.50	200.00	250.00	50.00	25.00%
001.4040.5443.000	WATER EXCISE TAX	626.60	0.00	-626.60	0.00	750.00	750.00	0.00%
001.4040.5450.000	TELEPHONE/OTHR COMMNCT	383.86	500.00	257.12	500.00	500.00	0.00	0.00%
001.4040.5460.000	CONFERENCE EXPENSE	0.00	1,250.00	240.00	1,250.00	1,250.00	0.00	0.00%
001.4040.5463.000	TRAVEL-MOVING REIMBRSMT	2,293.31	0.00	0.00	0.00	0.00	0.00	0.00%
001.4040.5600.000	OPERATING SUPPLIES	237.01	1,000.00	922.59	1,000.00	1,000.00	0.00	0.00%
001.4040.5601.000	PROMOTION/PROGRAM SPPL'	180.80	400.00	450.36	400.00	400.00	0.00	0.00%
001.4040.5605.000	OFFICE SUPPLIES	0.00	500.00	0.00	500.00	500.00	0.00	0.00%
001.4040.5613.000	MERCHANDISE FOR RESALE	1,168.50	2,000.00	0.00	2,000.00	2,000.00	0.00	0.00%
001.4040.5718.000	MINOR EQUIP, UNCLASSFIED	0.00	500.00	389.96	500.00	500.00	0.00	0.00%
001.4040.5980.000	REFUNDS/REIMB	886.00	750.00	658.00	750.00	750.00	0.00	0.00%
	Total Function: 4040 - Recreation:	**159,962.84**	**173,484.00**	**111,132.07**	**179,399.00**	**186,637.00**	**7,238.00**	**4.03%**
Function: 4041 - Youth Recreation & Camps								
001.4041.5010.010	REGULAR-NON UNION	78,960.88	81,605.00	53,258.34	81,605.00	84,262.00	2,657.00	3.26%
001.4041.5030.070	PART-TIME TEMPORARY	62,213.09	92,000.00	57,936.90	75,000.00	75,000.00	0.00	0.00%
001.4041.5101.010	SOCIAL SECURITY-NON UNION	4,336.58	5,060.00	2,965.28	5,060.00	5,224.00	164.00	3.24%
001.4041.5101.070	SOCIAL SECURITY-PT TEMP	3,857.19	5,704.00	3,592.15	4,650.00	4,650.00	0.00	0.00%
001.4041.5102.010	MEDICARE-NON UNION	1,014.12	1,183.00	693.51	1,183.00	1,222.00	39.00	3.30%
001.4041.5102.070	MEDICARE-TEMPORARY	902.15	1,334.00	840.06	1,088.00	1,088.00	0.00	0.00%

Budget Comparison Report

Account Number		2021-2022 Total Activity	2022-2023 Total Budget	2022-2023 YTD Activity Through Feb	Parent Budget 2022-2023 FY2023 Amend	Comparison 1 Budget 2023-2024 FY2024 Dept Request	Comparison 1 to Parent Budget Increase / (Decrease)	%
001.4041.5111.010	IPERS-NON UNION	7,453.81	7,704.00	5,027.46	7,704.00	7,954.00	250.00	3.25%
001.4041.5111.070	IPERS-PT TEMP	772.41	0.00	0.00	0.00	0.00	0.00	0.00%
001.4041.5121.010	GRP INSUR-NON UNION	13,057.92	14,372.00	9,387.98	15,112.00	16,027.00	915.00	6.05%
001.4041.5123.010	WORKCOMP-NON UNION	1,104.08	2,049.00	1,339.09	2,051.00	2,113.00	62.00	3.02%
001.4041.5123.070	WORKCOMP-TEMPORARY	1,004.10	2,673.00	1,684.93	2,181.00	2,181.00	0.00	0.00%
001.4041.5132.000	CLOTHING EXPENSE	1,042.69	300.00	0.00	300.00	300.00	0.00	0.00%
001.4041.5151.000	PHYSICALS/IMMUNIZATIONS	0.00	200.00	0.00	200.00	200.00	0.00	0.00%
001.4041.5210.000	ADVERTISING & LEGAL PUB	133.30	500.00	129.08	500.00	500.00	0.00	0.00%
001.4041.5216.000	BACKGROUND CHECKS	950.70	500.00	368.00	500.00	500.00	0.00	0.00%
001.4041.5251.000	LICENSE & PERMITS	123.55	0.00	0.00	0.00	0.00	0.00	0.00%
001.4041.5280.000	DUES, MEMBER, SUBSCRIPTN	668.00	700.00	680.00	700.00	700.00	0.00	0.00%
001.4041.5331.000	PAYMENTS-OTHER ENTITIES	4,948.70	7,000.00	6,441.79	7,000.00	7,000.00	0.00	0.00%
001.4041.5342.000	CONTRACT-OUTSIDE HELP	1,216.85	600.00	1,230.46	2,500.00	600.00	-1,900.00	-76.00%
001.4041.5357.000	RECR SRV-ADMISSION	13,891.41	15,000.00	10,321.68	15,000.00	15,000.00	0.00	0.00%
001.4041.5358.000	RECR SRV-INSTRUCTR	2,970.00	2,000.00	1,620.00	2,000.00	2,000.00	0.00	0.00%
001.4041.5360.000	POSTAGE & SHIPPING	0.00	100.00	0.00	100.00	100.00	0.00	0.00%
001.4041.5370.000	PRINTING & BINDING	0.00	500.00	0.00	500.00	500.00	0.00	0.00%
001.4041.5380.000	RENTS & LEASES	2,912.50	2,500.00	2,150.50	2,500.00	2,500.00	0.00	0.00%
001.4041.5460.000	CONFERENCE EXPENSE	160.00	200.00	70.00	200.00	200.00	0.00	0.00%
001.4041.5600.000	OPERATING SUPPLIES	1,674.19	1,500.00	420.36	1,500.00	1,500.00	0.00	0.00%
001.4041.5601.000	PROMOTION/PROGRAM SPPL'	13,952.04	6,000.00	9,774.49	10,000.00	9,000.00	-1,000.00	-10.00%
001.4041.5613.000	MERCHANDISE FOR RESALE	1,377.10	3,000.00	9,854.60	7,900.00	5,000.00	-2,900.00	-36.71%
001.4041.5718.000	MINOR EQUIP, UNCLASSFIED	1,368.17	0.00	0.00	0.00	0.00	0.00	0.00%
001.4041.5980.000	REFUNDS/REIMB	200.00	200.00	260.00	200.00	200.00	0.00	0.00%
Total Function: 4041 - Youth Recreation & Camps:		**222,265.53**	**254,484.00**	**180,046.66**	**247,234.00**	**245,521.00**	**-1,713.00**	**-0.69%**
Function: 4045 - Swimming Pools								
001.4045.5010.090	REGULAR-P&R UNION	0.00	2,405.00	0.00	0.00	0.00	0.00	0.00%
001.4045.5030.070	PART-TIME TEMPORARY	78,302.03	163,635.00	39,178.11	110,000.00	110,000.00	0.00	0.00%
001.4045.5050.060	PART-TIME REGULAR	1,182.70	0.00	7,778.11	11,764.00	12,102.00	338.00	2.87%
001.4045.5101.060	SOCIAL SECURITY-PT REGULAR	73.34	0.00	482.32	730.00	750.00	20.00	2.74%
001.4045.5101.070	SOCIAL SECURITY-PT TEMP	4,855.13	10,145.00	2,429.17	6,820.00	6,820.00	0.00	0.00%
001.4045.5101.090	SOCIAL SECURITY-P&R UNION	0.00	149.11	0.00	0.00	0.00	0.00	0.00%
001.4045.5102.060	MEDICARE-PT REGULAR	17.16	0.00	112.77	171.00	175.00	4.00	2.34%
001.4045.5102.070	MEDICARE-TEMPORARY	1,135.61	2,373.00	568.16	1,595.00	1,595.00	0.00	0.00%
001.4045.5102.090	MEDICARE-P&R UNION	0.00	34.87	0.00	0.00	0.00	0.00	0.00%
001.4045.5111.060	IPERS-PT REGULAR	111.65	0.00	710.77	1,087.00	1,142.00	55.00	5.06%
001.4045.5111.070	IPERS-PT TEMP	629.21	0.00	0.00	0.00	0.00	0.00	0.00%
001.4045.5111.090	IPERS-P&R UNION	0.00	227.03	0.00	0.00	0.00	0.00	0.00%
001.4045.5121.090	GRP INSUR-P&R UNION	0.00	541.24	0.00	0.00	0.00	0.00	0.00%

Budget Comparison Report

Account Number		2021-2022 Total Activity	2022-2023 Total Budget	2022-2023 YTD Activity Through Feb	Parent Budget 2022-2023 FY2023 Amend	Comparison 1 Budget 2023-2024 FY2024 Dept Request	Comparison 1 to Parent Budget Increase / (Decrease)	%
001.4045.5123.060	WORKCOMP-PT REGULAR	19.08	0.00	218.96	335.00	300.00	-35.00	-10.45%
001.4045.5123.070	WORKCOMP-TEMPORARY	1,231.86	4,046.00	969.80	2,723.00	2,723.00	0.00	0.00%
001.4045.5123.090	WORKCOMP-P&R UNION	0.00	62.00	0.00	0.00	0.00	0.00	0.00%
001.4045.5132.000	CLOTHING EXPENSE	0.00	2,200.00	0.00	2,200.00	2,200.00	0.00	0.00%
001.4045.5151.000	PHYSICALS/IMMUNIZATIONS	127.00	0.00	0.00	0.00	0.00	0.00	0.00%
001.4045.5210.000	ADVERTISING & LEGAL PUB	0.00	500.00	0.00	500.00	500.00	0.00	0.00%
001.4045.5216.000	BACKGROUND CHECKS	405.35	600.00	0.00	600.00	600.00	0.00	0.00%
001.4045.5251.000	LICENSE & PERMITS	1,371.90	1,500.00	851.12	1,500.00	1,500.00	0.00	0.00%
001.4045.5280.000	DUES,MEMBER,SUBSCRIPTN	475.04	0.00	0.00	475.00	475.00	0.00	0.00%
001.4045.5290.000	INSURANCE - GENERAL	6,048.60	6,695.00	0.00	8,040.00	9,648.00	1,608.00	20.00%
001.4045.5300.000	INSURANCE - TORT LIAB	5,207.02	6,564.00	0.00	5,176.00	6,211.00	1,035.00	20.00%
001.4045.5331.000	PAYMENTS-OTHER ENTITIES	396.00	1,500.00	300.00	1,500.00	1,500.00	0.00	0.00%
001.4045.5342.000	CONTRACT-OUTSIDE HELP	2,814.25	1,200.00	1,431.63	3,000.00	3,000.00	0.00	0.00%
001.4045.5344.000	CONTRACT-MAINTENANCE	2,052.00	1,000.00	862.63	1,000.00	1,000.00	0.00	0.00%
001.4045.5380.000	RENTS & LEASES	560.00	600.00	56.26	600.00	600.00	0.00	0.00%
001.4045.5386.000	CONTRACT LAWN CARE	4,880.00	4,500.00	2,850.00	4,800.00	4,800.00	0.00	0.00%
001.4045.5410.000	REPAIRS & MAINTENANCE	1,372.07	5,000.00	684.75	5,000.00	5,000.00	0.00	0.00%
001.4045.5450.000	TELEPHONE/OTHR COMMNCT	1,095.69	1,300.00	720.78	1,300.00	1,300.00	0.00	0.00%
001.4045.5460.000	CONFERENCE EXPENSE	910.00	250.00	0.00	250.00	250.00	0.00	0.00%
001.4045.5470.000	TRAINING	545.00	300.00	0.00	300.00	300.00	0.00	0.00%
001.4045.5481.000	ELECTRICITY	24,754.51	28,500.00	22,301.59	28,500.00	28,500.00	0.00	0.00%
001.4045.5482.000	NATURAL GAS	9,309.08	10,000.00	2,912.92	10,000.00	10,000.00	0.00	0.00%
001.4045.5600.000	OPERATING SUPPLIES	5,051.30	6,000.00	1,533.38	6,000.00	6,000.00	0.00	0.00%
001.4045.5601.000	PROMOTION/PROGRAM SPPL\	0.00	0.00	60.15	100.00	0.00	-100.00	-100.00%
001.4045.5605.000	OFFICE SUPPLIES	0.00	100.00	0.00	100.00	100.00	0.00	0.00%
001.4045.5607.000	CHEMICAL SPPLY	17,366.10	12,000.00	5,851.37	12,000.00	12,000.00	0.00	0.00%
001.4045.5611.000	BLDG,GRD OPER/MAINT SPLY	2,109.86	3,000.00	994.62	3,000.00	3,000.00	0.00	0.00%
001.4045.5613.000	MERCHANDISE FOR RESALE	0.00	200.00	72.35	200.00	200.00	0.00	0.00%
001.4045.5704.000	MINOR SOFTWARE <$5,000	369.00	0.00	0.00	0.00	0.00	0.00	0.00%
001.4045.5718.000	MINOR EQUIP, UNCLASSFIED	1,297.44	3,000.00	998.89	3,000.00	3,000.00	0.00	0.00%
001.4045.5980.000	REFUNDS/REIMB	726.74	150.00	148.00	150.00	150.00	0.00	0.00%
001.4045.5990.000	CASH SHORT & (OVER)	1.00	0.00	1.00	0.00	0.00	0.00	0.00%
	Total Function: 4045 - Swimming Pools:	**176,802.72**	**280,277.25**	**95,079.61**	**234,516.00**	**237,441.00**	**2,925.00**	**1.25%**
Function: 4060 - Community Center								
001.4060.5331.000	PAYMENTS-OTHER ENTITIES	100,000.00	100,000.00	74,999.97	100,000.00	100,000.00	0.00	0.00%
	Total Function: 4060 - Community Center:	**100,000.00**	**100,000.00**	**74,999.97**	**100,000.00**	**100,000.00**	**0.00**	**0.00%**
Function: 4065 - Coliseum								
001.4065.5010.010	REGULAR-NON UNION	0.00	0.00	2,488.58	200.00	6,653.00	6,453.00	3,226.50%
001.4065.5030.070	PART-TIME TEMPORARY	12,156.56	0.00	743.58	2,000.00	2,000.00	0.00	0.00%

Budget Comparison Report

Account Number		2021-2022 Total Activity	2022-2023 Total Budget	2022-2023 YTD Activity Through Feb	Parent Budget 2022-2023 FY2023 Amend	Comparison 1 Budget 2023-2024 FY2024 Dept Request	Comparison 1 to Parent Budget Increase / (Decrease)	%
001.4065.5050.060	PART-TIME REGULAR	3,802.69	34,530.00	11,061.34	27,613.00	28,621.00	1,008.00	3.65%
001.4065.5101.010	SOCIAL SECURITY-NON UNION	0.00	0.00	148.74	12.00	412.00	400.00	3,333.33%
001.4065.5101.060	SOCIAL SECURITY-PT REGULAR	239.42	2,141.00	685.72	1,712.00	1,774.00	62.00	3.62%
001.4065.5101.070	SOCIAL SECURITY-PT TEMP	753.74	0.00	46.09	124.00	124.00	0.00	0.00%
001.4065.5102.010	MEDICARE-NON UNION	0.00	0.00	34.79	3.00	96.00	93.00	3,100.00%
001.4065.5102.060	MEDICARE-PT REGULAR	56.00	501.00	160.36	401.00	415.00	14.00	3.49%
001.4065.5102.070	MEDICARE-TEMPORARY	176.27	0.00	10.80	29.00	29.00	0.00	0.00%
001.4065.5111.010	IPERS-NON UNION	0.00	0.00	216.08	0.00	628.00	628.00	0.00%
001.4065.5111.060	IPERS-PT REGULAR	270.94	3,260.00	1,020.54	2,583.00	2,702.00	119.00	4.61%
001.4065.5111.070	IPERS-PT TEMP	1,114.54	0.00	70.20	0.00	0.00	0.00	0.00%
001.4065.5121.010	GRP INSUR-NON UNION	0.00	0.00	507.72	0.00	1,451.00	1,451.00	0.00%
001.4065.5123.010	WORKCOMP-NON UNION	0.00	0.00	56.63	0.00	165.00	165.00	0.00%
001.4065.5123.060	WORKCOMP-PT REGULAR	57.23	1,003.00	300.23	796.00	708.00	-88.00	-11.06%
001.4065.5123.070	WORKCOMP-TEMPORARY	235.36	0.00	18.40	58.00	58.00	0.00	0.00%
001.4065.5151.000	PHYSICALS/IMMUNIZATIONS	317.00	0.00	0.00	0.00	0.00	0.00	0.00%
001.4065.5210.000	ADVERTISING & LEGAL PUB	200.00	1,000.00	0.00	1,000.00	1,000.00	0.00	0.00%
001.4065.5216.000	BACKGROUND CHECKS	0.00	200.00	0.00	200.00	200.00	0.00	0.00%
001.4065.5251.000	LICENSE & PERMITS	2,153.70	0.00	150.00	2,300.00	2,300.00	0.00	0.00%
001.4065.5290.000	INSURANCE - GENERAL	6,600.44	7,352.00	0.00	8,764.00	10,517.00	1,753.00	20.00%
001.4065.5300.000	INSURANCE - TORT LIAB	647.84	495.00	0.00	853.00	1,024.00	171.00	20.05%
001.4065.5342.000	CONTRACT-OUTSIDE HELP	1,270.83	1,200.00	487.78	1,200.00	1,200.00	0.00	0.00%
001.4065.5344.000	CONTRACT-MAINTENANCE	1,491.95	1,000.00	1,515.00	1,000.00	1,000.00	0.00	0.00%
001.4065.5380.000	RENTS & LEASES	420.00	300.00	0.00	300.00	300.00	0.00	0.00%
001.4065.5410.000	REPAIRS & MAINTENANCE	343.86	1,000.00	3,895.34	1,000.00	3,000.00	2,000.00	200.00%
001.4065.5450.000	TELEPHONE/OTHR COMMNCT	2,088.61	2,000.00	1,397.61	2,000.00	2,000.00	0.00	0.00%
001.4065.5481.000	ELECTRICITY	50,293.43	31,200.00	31,395.26	45,000.00	45,000.00	0.00	0.00%
001.4065.5482.000	NATURAL GAS	6,517.15	2,000.00	6,191.33	6,000.00	6,000.00	0.00	0.00%
001.4065.5483.000	WATER	496.34	1,800.00	416.74	1,800.00	1,800.00	0.00	0.00%
001.4065.5488.000	SEWER	301.54	0.00	158.16	300.00	300.00	0.00	0.00%
001.4065.5600.000	OPERATING SUPPLIES	3,183.59	2,000.00	884.48	2,000.00	2,000.00	0.00	0.00%
001.4065.5611.000	BLDG,GRD OPER/MAINT SPLY	2,048.82	1,000.00	1,802.70	2,000.00	3,000.00	1,000.00	50.00%
001.4065.5718.000	MINOR EQUIP, UNCLASSFIED	1,448.31	1,800.00	123.18	1,800.00	1,800.00	0.00	0.00%
001.4065.5980.000	REFUNDS/REIMB	0.00	500.00	0.00	500.00	500.00	0.00	0.00%
	Total Function: 4065 - Coliseum:	**98,686.16**	**96,282.00**	**65,987.38**	**113,548.00**	**128,777.00**	**15,229.00**	**13.41%**
Function: 4066 - Coliseum Concessions								
001.4066.5030.070	PART-TIME TEMPORARY	0.00	1,500.00	661.50	1,500.00	1,500.00	0.00	0.00%
001.4066.5101.070	SOCIAL SECURITY-PT TEMP	0.00	93.00	41.01	93.00	93.00	0.00	0.00%
001.4066.5102.070	MEDICARE-TEMPORARY	0.00	22.00	9.60	22.00	22.00	0.00	0.00%
001.4066.5111.070	IPERS-PT TEMP	0.00	0.00	0.00	0.00	0.00	0.00	0.00%

Budget Comparison Report

Account Number		2021-2022 Total Activity	2022-2023 Total Budget	2022-2023 YTD Activity Through Feb	Parent Budget 2022-2023 FY2023 Amend	Comparison 1 Budget 2023-2024 FY2024 Dept Request	Comparison 1 to Parent Budget Increase / (Decrease)	%
001.4066.5123.070	WORKCOMP-TEMPORARY	0.00	44.00	16.38	44.00	44.00	0.00	0.00%
001.4066.5251.000	LICENSE & PERMITS	411.50	0.00	0.00	0.00	0.00	0.00	0.00%
001.4066.5280.000	DUES, MEMBER, SUBSCRIPTN	0.00	0.00	50.00	0.00	0.00	0.00	0.00%
001.4066.5290.000	INSURANCE - GENERAL	500.00	627.00	0.00	600.00	720.00	120.00	20.00%
001.4066.5300.000	INSURANCE - TORT LIAB	0.00	0.00	0.00	49.00	59.00	10.00	20.41%
001.4066.5600.000	OPERATING SUPPLIES	481.45	500.00	486.03	500.00	500.00	0.00	0.00%
001.4066.5611.000	BLDG.GRD OPER/MAINT SPLY	0.00	0.00	301.83	0.00	0.00	0.00	0.00%
001.4066.5613.000	MERCHANDISE FOR RESALE	11,331.69	11,000.00	9,884.36	11,000.00	11,000.00	0.00	0.00%
001.4066.5703.000	MINOR COMPUTER	1,218.28	0.00	0.00	0.00	0.00	0.00	0.00%
001.4066.5718.000	MINOR EQUIP, UNCLASSFIED	1,102.93	1,000.00	0.00	1,000.00	1,000.00	0.00	0.00%
Total Function: 4066 - Coliseum Concessions:		**15,045.85**	**14,786.00**	**11,450.71**	**14,808.00**	**14,938.00**	**130.00**	**0.88%**
Function: 5010 - Community Beautification								
001.5010.5010.010	REGULAR-NON UNION	5,224.79	5,387.00	3,639.86	5,437.00	5,870.00	433.00	7.96%
001.5010.5101.010	SOCIAL SECURITY-NON UNION	326.87	334.00	220.65	337.00	364.00	27.00	8.01%
001.5010.5102.010	MEDICARE-NON UNION	76.32	78.00	51.54	79.00	85.00	6.00	7.59%
001.5010.5111.010	IPERS-NON UNION	508.50	508.00	338.76	508.00	554.00	46.00	9.06%
001.5010.5121.010	GRP INSUR-NON UNION	696.55	769.00	502.12	808.00	857.00	49.00	6.06%
001.5010.5123.010	WORKCOMP-NON UNION	4.86	156.00	5.82	157.00	171.00	14.00	8.92%
001.5010.5300.000	INSURANCE - TORT LIAB	86.15	161.00	0.00	73.00	88.00	15.00	20.55%
001.5010.5342.000	CONTRACT-OUTSIDE HELP	1,800.00	4,000.00	1,551.42	2,400.00	4,800.00	2,400.00	100.00%
001.5010.5410.000	REPAIRS & MAINTENANCE	0.00	4,000.00	100.00	4,000.00	4,000.00	0.00	0.00%
001.5010.5463.000	TRAVEL-MOVING REIMBRSMT	163.80	0.00	0.00	0.00	0.00	0.00	0.00%
001.5010.5562.000	GROUNDS EQUIP MAINT SPLY	0.00	4,000.00	0.00	4,000.00	4,000.00	0.00	0.00%
001.5010.5600.000	OPERATING SUPPLIES	0.00	3,200.00	176.68	585.00	3,200.00	2,615.00	447.01%
001.5010.5602.000	SUPPLIES - BANNERS	91.64	0.00	2,873.85	2,615.00	0.00	-2,615.00	-100.00%
Total Function: 5010 - Community Beautification:		**8,979.48**	**22,593.00**	**9,460.70**	**20,999.00**	**23,989.00**	**2,990.00**	**14.24%**
Function: 5020 - Economic Development								
001.5020.5230.000	CONSULTING & PROF FEES	3,387.00	0.00	270.00	270.00	0.00	-270.00	-100.00%
001.5020.5234.000	LEGAL EXPENSES	15,331.50	0.00	0.00	0.00	0.00	0.00	0.00%
001.5020.5300.000	INSURANCE - TORT LIAB	2,158.02	1,741.00	0.00	1,835.00	2,202.00	367.00	20.00%
001.5020.5331.000	PAYMENTS-OTHER ENTITIES	85,000.00	90,000.00	65,000.00	90,000.00	50,000.00	-40,000.00	-44.44%
001.5020.5342.000	CONTRACT-OUTSIDE HELP	0.00	0.00	205.38	205.00	0.00	-205.00	-100.00%
001.5020.5410.000	REPAIRS & MAINTENANCE	39,901.60	50,000.00	36,249.66	233,952.00	50,000.00	-183,952.00	-78.63%
001.5020.5440.000	TAXES PAID	0.00	0.00	19.00	19.00	0.00	-19.00	-100.00%
Total Function: 5020 - Economic Development:		**145,778.12**	**141,741.00**	**101,744.04**	**326,281.00**	**102,202.00**	**-224,079.00**	**-68.68%**
Function: 5040 - Planning & Zoning								
001.5040.5010.010	REGULAR-NON UNION	128,727.36	140,502.00	92,230.57	151,164.00	125,464.00	-25,700.00	-17.00%
001.5040.5060.010	TERM PAYOUTS-NON UNION	2,847.45	0.00	0.00	0.00	0.00	0.00	0.00%

Budget Comparison Report

Account Number		2021-2022 Total Activity	2022-2023 Total Budget	2022-2023 YTD Activity Through Feb	Parent Budget 2022-2023 FY2023 Amend	Comparison 1 Budget 2023-2024 FY2024 Dept Request	Comparison 1 to Parent Budget Increase / (Decrease)	%
001.5040.5101.010	SOCIAL SECURITY-NON UNION	7,782.22	8,711.00	5,618.23	9,372.00	7,779.00	-1,593.00	-17.00%
001.5040.5102.010	MEDICARE-NON UNION	1,820.16	2,037.00	1,313.91	2,192.00	1,819.00	-373.00	-17.02%
001.5040.5111.010	IPERS-NON UNION	12,151.65	13,263.00	8,612.07	14,175.00	11,844.00	-2,331.00	-16.44%
001.5040.5121.010	GRP INSUR-NON UNION	17,964.81	22,296.00	6,720.34	27,487.00	11,147.00	-16,340.00	-59.45%
001.5040.5123.010	WORKCOMP-NON UNION	467.77	2,752.00	822.09	2,944.00	1,060.00	-1,884.00	-63.99%
001.5040.5151.000	PHYSICALS/IMMUNIZATIONS	0.00	0.00	179.00	179.00	0.00	-179.00	-100.00%
001.5040.5210.000	ADVERTISING & LEGAL PUB	96.92	600.00	0.00	300.00	300.00	0.00	0.00%
001.5040.5216.000	BACKROUND CHECKS	0.00	0.00	15.00	15.00	0.00	-15.00	-100.00%
001.5040.5230.000	CONSULTING & PROF FEES	7,607.50	5,000.00	900.00	500.00	0.00	-500.00	-100.00%
001.5040.5250.000	COURT, RECORD & FILING FEE	0.00	100.00	0.00	100.00	100.00	0.00	0.00%
001.5040.5280.000	DUES, MEMBER, SUBSCRIPTN	14,268.50	17,500.00	13,894.50	17,500.00	17,500.00	0.00	0.00%
001.5040.5300.000	INSURANCE - TORT LIAB	900.57	801.00	0.00	859.00	1,031.00	172.00	20.02%
001.5040.5347.000	CONTRACT-SOFTWARE MAINT	399.90	400.00	1,550.00	400.00	400.00	0.00	0.00%
001.5040.5360.000	POSTAGE & SHIPPING	55.00	200.00	0.00	200.00	200.00	0.00	0.00%
001.5040.5460.000	CONFERENCE EXPENSE	1,095.00	800.00	825.00	800.00	800.00	0.00	0.00%
001.5040.5600.000	OPERATING SUPPLIES	230.91	200.00	85.10	200.00	200.00	0.00	0.00%
001.5040.5605.000	OFFICE SUPPLIES	19.43	100.00	33.88	100.00	100.00	0.00	0.00%
	Total Function: 5040 - Planning & Zoning:	**196,435.15**	**215,262.00**	**132,799.69**	**228,487.00**	**179,744.00**	**-48,743.00**	**-21.33%**
Function: 5900 - Other Community and Economic Dev.								
001.5900.5331.000	PAYMENTS-OTHER ENTITIES	325,989.77	268,800.00	207,495.92	336,000.00	336,000.00	0.00	0.00%
001.5900.5565.000	VEHICLE OPER/MAINT SUPPLY	103.94	0.00	1,065.00	1,065.00	0.00	-1,065.00	-100.00%
001.5900.5781.000	LAND ACQUISITION	74,000.00	0.00	600.00	600.00	0.00	-600.00	-100.00%
	Total Function: 5900 - Other Community and Economic Dev.:	**400,093.71**	**268,800.00**	**209,160.92**	**337,665.00**	**336,000.00**	**-1,665.00**	**-0.49%**
Function: 6010 - Mayor								
001.6010.5030.070	PART-TIME TEMPORARY	9,257.60	11,000.00	7,191.20	11,000.00	11,000.00	0.00	0.00%
001.6010.5102.070	MEDICARE-TEMPORARY	134.33	160.00	104.33	160.00	160.00	0.00	0.00%
001.6010.5111.070	IPERS-PT TEMP	873.95	1,038.00	678.85	1,038.00	1,038.00	0.00	0.00%
001.6010.5123.070	WORKCOMP-TEMPORARY	8.33	18.00	11.73	18.00	18.00	0.00	0.00%
001.6010.5210.000	ADVERTISING & LEGAL PUB	0.00	0.00	5.29	20.00	0.00	-20.00	-100.00%
001.6010.5280.000	DUES, MEMBER, SUBSCRIPTN	30.00	500.00	0.00	500.00	500.00	0.00	0.00%
001.6010.5300.000	INSURANCE - TORT LIAB	106.95	186.00	0.00	118.00	142.00	24.00	20.34%
001.6010.5450.000	TELEPHONE/OTHR COMMNCT	383.86	400.00	257.12	400.00	400.00	0.00	0.00%
001.6010.5460.000	CONFERENCE EXPENSE	70.00	1,000.00	25.00	500.00	1,000.00	500.00	100.00%
001.6010.5600.000	OPERATING SUPPLIES	58.64	250.00	30.99	250.00	250.00	0.00	0.00%
	Total Function: 6010 - Mayor:	**10,923.66**	**14,552.00**	**8,304.51**	**14,004.00**	**14,508.00**	**504.00**	**3.60%**
Function: 6011 - Council								
001.6011.5030.070	PART-TIME TEMPORARY	29,720.80	38,500.00	25,194.40	38,500.00	38,500.00	0.00	0.00%
001.6011.5101.070	SOCIAL SECURITY-PT TEMP	725.13	682.00	669.24	1,044.00	1,044.00	0.00	0.00%

Budget Comparison Report

Account Number		2021-2022 Total Activity	2022-2023 Total Budget	2022-2023 YTD Activity Through Feb	Parent Budget 2022-2023 FY2023 Amend	Comparison 1 Budget 2023-2024 FY2024 Dept Request	Comparison 1 to Parent Budget Increase / (Decrease)	%
001.6011.5102.070	MEDICARE-TEMPORARY	430.49	558.00	365.05	558.00	558.00	0.00	0.00%
001.6011.5111.070	IPERS-PT TEMP	1,603.34	2,596.00	1,359.24	2,596.00	2,596.00	0.00	0.00%
001.6011.5123.070	WORKCOMP-TEMPORARY	26.39	63.00	41.72	63.00	63.00	0.00	0.00%
001.6011.5230.000	CONSULTING & PROF FEES	1,345.00	1,500.00	2,350.00	2,350.00	2,350.00	0.00	0.00%
001.6011.5300.000	INSURANCE - TORT LIAB	591.15	1,085.00	0.00	670.00	804.00	134.00	20.00%
001.6011.5331.000	PAYMENTS - OTHER ENTITIES	140.00	500.00	84.00	250.00	250.00	0.00	0.00%
001.6011.5344.000	CONTRACT-MAINTENANCE	37.45	0.00	0.00	0.00	0.00	0.00	0.00%
001.6011.5460.000	CONFERENCE EXPENSE	240.00	1,750.00	25.00	1,000.00	1,750.00	750.00	75.00%
001.6011.5600.000	OPERATING SUPPLIES	470.34	200.00	117.13	200.00	200.00	0.00	0.00%
001.6011.5605.000	OFFICE SUPPLIES	53.99	0.00	0.00	0.00	0.00	0.00	0.00%
	Total Function: 6011 - Council:	**35,384.08**	**47,434.00**	**30,205.78**	**47,231.00**	**48,115.00**	**884.00**	**1.87%**
Function: 6012 - City Administrator/Manager								
001.6012.5010.010	REGULAR-NON UNION	130,995.49	140,343.00	90,228.11	136,902.00	140,327.00	3,425.00	2.50%
001.6012.5057.010	CAR REIMB-NON UNION	2,925.00	2,700.00	1,575.00	2,700.00	2,700.00	0.00	0.00%
001.6012.5101.010	SOCIAL SECURITY-NON UNION	6,597.54	7,003.00	3,792.12	6,743.00	7,574.00	831.00	12.32%
001.6012.5102.010	MEDICARE-NON UNION	1,923.81	2,074.00	1,319.23	2,024.00	2,074.00	50.00	2.47%
001.6012.5111.010	IPERS-NON UNION	12,373.88	13,503.00	8,448.36	13,108.00	13,502.00	394.00	3.01%
001.6012.5121.010	GRP INSUR-NON UNION	4,301.96	4,885.00	3,137.35	5,132.00	5,440.00	308.00	6.00%
001.6012.5123.010	WORKCOMP-NON UNION	119.33	229.00	148.85	222.00	229.00	7.00	3.15%
001.6012.5230.000	CONSULTING & PROF FEES	4,720.00	500.00	375.00	500.00	500.00	0.00	0.00%
001.6012.5280.000	DUES, MEMBER, SUBSCRIPTN	2,107.04	1,750.00	1,700.00	1,750.00	1,750.00	0.00	0.00%
001.6012.5300.000	INSURANCE - TORT LIAB	773.06	763.00	0.00	715.00	858.00	143.00	20.00%
001.6012.5331.000	PAYMENTS-OTHER ENTITIES	28.00	0.00	0.00	0.00	0.00	0.00	0.00%
001.6012.5450.000	TELEPHONE/OTHR COMMNCT	863.86	900.00	737.12	900.00	900.00	0.00	0.00%
001.6012.5460.000	CONFERENCE EXPENSE	790.00	1,000.00	1,533.00	1,750.00	1,000.00	-750.00	-42.86%
001.6012.5465.000	TRAVEL - HOTEL/MOTEL	643.56	1,000.00	0.00	500.00	1,000.00	500.00	100.00%
001.6012.5600.000	OPERATING SUPPLIES	0.00	250.00	0.00	250.00	250.00	0.00	0.00%
001.6012.5605.000	OFFICE SUPPLIES	7.99	250.00	0.00	250.00	250.00	0.00	0.00%
001.6012.5703.000	MINOR COMPUTER	29.98	0.00	0.00	0.00	0.00	0.00	0.00%
	Total Function: 6012 - City Administrator/Manager:	**169,200.50**	**177,150.00**	**112,994.14**	**173,446.00**	**178,354.00**	**4,908.00**	**2.83%**
Function: 6020 - Clerk								
001.6020.5010.010	REGULAR-NON UNION	69,512.44	73,836.00	48,458.61	74,836.00	76,557.00	1,721.00	2.30%
001.6020.5101.010	SOCIAL SECURITY-NON UNION	3,992.79	4,578.00	2,775.62	4,640.00	4,747.00	107.00	2.31%
001.6020.5102.010	MEDICARE-NON UNION	933.72	1,071.00	649.16	1,086.00	1,110.00	24.00	2.21%
001.6020.5111.010	IPERS-NON UNION	6,561.93	6,970.00	4,480.05	6,970.00	7,227.00	257.00	3.69%
001.6020.5121.010	GRP INSUR-NON UNION	13,970.04	15,376.00	10,044.04	16,169.00	17,149.00	980.00	6.06%
001.6020.5122.000	RETIREES GRP HLTH INS	6,961.44	7,662.00	5,003.22	7,786.00	8,949.00	1,163.00	14.94%
001.6020.5123.010	WORKCOMP-NON UNION	61.85	121.00	77.57	121.00	125.00	4.00	3.31%
001.6020.5210.000	ADVERTISING & LEGAL PUB	8,489.51	8,500.00	5,763.02	8,750.00	8,750.00	0.00	0.00%

Budget Comparison Report

Account Number		2021-2022 Total Activity	2022-2023 Total Budget	2022-2023 YTD Activity Through Feb	Parent Budget 2022-2023 FY2023 Amend	Comparison 1 Budget 2023-2024 FY2024 Dept Request	Comparison 1 to Parent Budget Increase / (Decrease)	%
001.6020.5230.000	CONSULTING & PROF FEES	1,649.00	2,500.00	9,343.28	11,850.00	2,500.00	-9,350.00	-78.90%
001.6020.5250.000	COURT, RECORD & FILING FEE	1,216.20	900.00	1,275.00	1,500.00	1,500.00	0.00	0.00%
001.6020.5280.000	DUES, MEMBER, SUBSCRIPTN	670.00	11,200.00	10,645.00	11,200.00	11,200.00	0.00	0.00%
001.6020.5300.000	INSURANCE - TORT LIAB	654.85	756.00	0.00	560.00	672.00	112.00	20.00%
001.6020.5344.000	CONTRACT-MAINTENANCE	1,613.83	2,000.00	486.88	2,000.00	2,000.00	0.00	0.00%
001.6020.5347.000	CONTRACT-SOFTWARE MAINT	450.00	450.00	450.00	450.00	450.00	0.00	0.00%
001.6020.5360.000	POSTAGE & SHIPPING	5,940.85	7,000.00	-55.00	500.00	3,000.00	2,500.00	500.00%
001.6020.5410.000	REPAIRS & MAINTENANCE	0.00	100.00	0.00	100.00	100.00	0.00	0.00%
001.6020.5450.000	TELEPHONE/OTHR COMMNCT	383.86	400.00	257.12	400.00	400.00	0.00	0.00%
001.6020.5460.000	CONFERENCE EXPENSE	1,104.00	624.00	80.00	500.00	500.00	0.00	0.00%
001.6020.5464.000	TRAVEL-PER DIEM	8.00	24.00	20.00	20.00	40.00	20.00	100.00%
001.6020.5472.000	MILEAGE REIMBURSE	122.62	0.00	19.50	75.00	150.00	75.00	100.00%
001.6020.5600.000	OPERATING SUPPLIES	71.89	0.00	0.00	0.00	0.00	0.00	0.00%
001.6020.5605.000	OFFICE SUPPLIES	169.41	800.00	407.07	800.00	800.00	0.00	0.00%
001.6020.5980.000	REFUNDS/REIMB	21.00	0.00	7.00	7.00	0.00	-7.00	-100.00%
	Total Function: 6020 - Clerk:	**124,559.23**	**144,868.00**	**100,187.14**	**150,320.00**	**147,926.00**	**-2,394.00**	**-1.59%**
Function: 6021 - Finance								
001.6021.5010.010	REGULAR-NON UNION	351,679.96	368,812.00	243,022.29	371,812.00	383,865.00	12,053.00	3.24%
001.6021.5020.010	OVERTIME-NON UNION	0.00	3,000.00	0.00	3,000.00	3,000.00	0.00	0.00%
001.6021.5101.010	SOCIAL SECURITY-NON UNION	20,043.08	22,866.00	13,919.07	23,052.00	23,800.00	748.00	3.24%
001.6021.5102.010	MEDICARE-NON UNION	4,687.43	5,348.00	3,255.34	5,392.00	5,566.00	174.00	3.23%
001.6021.5111.010	IPERS-NON UNION	33,198.72	34,816.00	22,469.33	34,627.00	36,237.00	1,610.00	4.65%
001.6021.5121.010	GRP INSUR-NON UNION	61,114.93	67,540.00	43,750.94	71,015.00	75,848.00	4,833.00	6.81%
001.6021.5122.000	RETIREES GRP HLTH INS	2,283.14	2,414.00	0.00	0.00	0.00	0.00	0.00%
001.6021.5123.010	WORKCOMP-NON UNION	312.88	602.00	389.07	599.00	627.00	28.00	4.67%
001.6021.5210.000	ADVERTISING & LEGAL PUB	203.86	0.00	11.07	11.00	0.00	-11.00	-100.00%
001.6021.5215.000	BANK CHARGES	1,991.34	1,600.00	1,281.35	2,000.00	2,000.00	0.00	0.00%
001.6021.5230.000	CONSULTING & PROF FEES	1,732.50	6,850.00	6,255.00	6,775.00	9,350.00	2,575.00	38.01%
001.6021.5232.000	AUDITING FEES	37,209.00	40,086.00	39,933.00	39,933.00	41,538.00	1,605.00	4.02%
001.6021.5280.000	DUES, MEMBER, SUBSCRIPTN	1,125.00	1,200.00	1,075.00	1,200.00	1,200.00	0.00	0.00%
001.6021.5300.000	INSURANCE - TORT LIAB	2,603.68	2,886.00	0.00	2,580.00	3,096.00	516.00	20.00%
001.6021.5342.000	CONTRACT-OUTSIDE HELP	9.00	0.00	0.00	0.00	0.00	0.00	0.00%
001.6021.5344.000	CONTRACT-MAINTENANCE	128.63	200.00	239.01	450.00	450.00	0.00	0.00%
001.6021.5347.000	CONTRACT-SOFTWARE MAINT	43,787.19	49,000.00	42,149.76	46,000.00	48,000.00	2,000.00	4.35%
001.6021.5360.000	POSTAGE & SHIPPING	0.00	300.00	2,168.40	2,353.00	2,200.00	-153.00	-6.50%
001.6021.5410.000	REPAIRS & MAINTENANCE	103.07	100.00	0.00	100.00	100.00	0.00	0.00%
001.6021.5450.000	TELEPHONE/OTHR COMMNCT	1,534.81	1,800.00	972.26	1,600.00	1,600.00	0.00	0.00%
001.6021.5460.000	CONFERENCE EXPENSE	125.00	500.00	50.00	500.00	500.00	0.00	0.00%
001.6021.5470.000	TRAINING	0.00	200.00	0.00	200.00	200.00	0.00	0.00%

Budget Comparison Report

Account Number		2021-2022 Total Activity	2022-2023 Total Budget	2022-2023 YTD Activity Through Feb	Parent Budget 2022-2023 FY2023 Amend	Comparison 1 Budget 2023-2024 FY2024 Dept Request	Comparison 1 to Parent Budget Increase / (Decrease)	%
001.6021.5472.000	MILEAGE REIMBURSE	161.78	0.00	0.00	0.00	0.00	0.00	0.00%
001.6021.5600.000	OPERATING SUPPLIES	158.55	100.00	0.00	100.00	100.00	0.00	0.00%
001.6021.5605.000	OFFICE SUPPLIES	1,493.68	2,551.00	819.01	2,000.00	2,000.00	0.00	0.00%
001.6021.5612.000	COMPUTER COMPONENTS	114.14	500.00	0.00	500.00	500.00	0.00	0.00%
001.6021.5702.000	MINOR OFFICE FURN/EQUIP	845.06	100.00	682.09	800.00	100.00	-700.00	-87.50%
001.6021.5703.000	MINOR COMPUTER	23.50	200.00	0.00	200.00	200.00	0.00	0.00%
001.6021.5704.000	MINOR SOFTWARE <$5,000	488.39	20.00	0.00	20.00	20.00	0.00	0.00%
001.6021.5718.000	MINOR EQUIP, UNCLASSFIED	0.00	100.00	0.00	100.00	100.00	0.00	0.00%
001.6021.5870.000	FINES & SERVICE CHRGS	0.00	25.00	17,928.87	17,929.00	25.00	-17,904.00	-99.86%
001.6021.5990.000	CASH SHORT & (OVER)	-110.40	10.00	-20.91	10.00	10.00	0.00	0.00%
	Total Function: 6021 - Finance:	**567,047.92**	**613,726.00**	**440,349.95**	**634,858.00**	**642,232.00**	**7,374.00**	**1.16%**
Function: 6025 - HR								
001.6025.5010.010	REGULAR-NON UNION	88,193.35	90,907.00	60,207.45	91,767.00	93,634.00	1,867.00	2.03%
001.6025.5101.010	SOCIAL SECURITY-NON UNION	5,188.82	5,636.00	3,549.51	5,689.00	5,805.00	116.00	2.04%
001.6025.5102.010	MEDICARE-NON UNION	1,213.55	1,318.00	830.17	1,330.00	1,358.00	28.00	2.11%
001.6025.5111.010	IPERS-NON UNION	8,325.45	8,582.00	5,602.43	8,582.00	8,839.00	257.00	2.99%
001.6025.5121.010	GRP INSUR-NON UNION	12,014.26	13,224.00	8,637.93	13,905.00	14,748.00	843.00	6.06%
001.6025.5123.010	WORKCOMP-NON UNION	78.36	148.00	96.97	149.00	153.00	4.00	2.68%
001.6025.5230.000	CONSULTING & PROF FEES	337.50	0.00	0.00	0.00	0.00	0.00	0.00%
001.6025.5280.000	DUES, MEMBER, SUBSCRIPTN	1,179.00	1,000.00	265.00	1,000.00	1,000.00	0.00	0.00%
001.6025.5300.000	INSURANCE - TORT LIAB	551.76	576.00	0.00	528.00	634.00	106.00	20.08%
001.6025.5342.000	CONTRACT-OUTSIDE HELP	0.00	1,000.00	1,635.25	1,000.00	1,000.00	0.00	0.00%
001.6025.5360.000	POSTAGE & SHIPPING	20.96	0.00	0.00	0.00	0.00	0.00	0.00%
001.6025.5450.000	TELEPHONE/OTHR COMMNCT	383.86	500.00	257.12	500.00	500.00	0.00	0.00%
001.6025.5460.000	CONFERENCE EXPENSE	886.75	2,000.00	1,014.41	2,000.00	2,000.00	0.00	0.00%
001.6025.5472.000	MILEAGE REIMBURSE	29.25	0.00	0.00	0.00	0.00	0.00	0.00%
001.6025.5600.000	OPERATING SUPPLIES	0.00	100.00	0.00	100.00	100.00	0.00	0.00%
001.6025.5605.000	OFFICE SUPPLIES	567.23	2,000.00	307.60	2,000.00	2,000.00	0.00	0.00%
	Total Function: 6025 - HR:	**118,970.10**	**126,991.00**	**82,403.84**	**128,550.00**	**131,771.00**	**3,221.00**	**2.51%**
Function: 6030 - Elections								
001.6030.5365.000	ELECTION EXPENSE	3,806.70	0.00	0.00	0.00	4,000.00	4,000.00	0.00%
	Total Function: 6030 - Elections:	**3,806.70**	**0.00**	**0.00**	**0.00**	**4,000.00**	**4,000.00**	**0.00%**
Function: 6040 - Legal Services								
001.6040.5230.000	CONSULTING & PROF FEES	8,448.50	5,000.00	4,005.00	3,500.00	5,000.00	1,500.00	42.86%
001.6040.5234.000	LEGAL EXPENSES	63,955.77	40,000.00	37,509.20	50,000.00	40,000.00	-10,000.00	-20.00%
001.6040.5235.000	UNION NEGOTIATING FEES	1,455.10	0.00	60.00	60.00	20,000.00	19,940.00	33,233.33%
001.6040.5236.000	LEGAL-PERSONNEL	3,630.80	6,000.00	504.00	5,000.00	6,000.00	1,000.00	20.00%
001.6040.5250.000	COURT, RECORD & FILING FEE	105.00	250.00	2.75	250.00	250.00	0.00	0.00%

Budget Comparison Report

Account Number		2021-2022 Total Activity	2022-2023 Total Budget	2022-2023 YTD Activity Through Feb	Parent Budget 2022-2023 FY2023 Amend	Comparison 1 Budget 2023-2024 FY2024 Dept Request	Comparison 1 to Parent Budget Increase / (Decrease)	%
001.6040.5300.000	INSURANCE - TORT LIAB	342.79	373.00	0.00	358.00	430.00	72.00	20.11%
001.6040.5331.000	PAYMENTS-OTHER ENTITIES	10,000.00	10,000.00	7,500.00	10,000.00	10,000.00	0.00	0.00%
001.6040.5342.000	CONTRACT-OUTSIDE HELP	0.00	0.00	0.00	0.00	0.00	0.00	0.00%
001.6040.5360.000	POSTAGE & SHIPPING	0.00	0.00	39.47	0.00	0.00	0.00	0.00%
001.6040.5460.000	CONFERENCE EXPENSE	224.00	0.00	0.00	0.00	0.00	0.00	0.00%
001.6040.5472.000	MILEAGE REIMBUSMENT	0.00	0.00	84.24	500.00	500.00	0.00	0.00%
	Total Function: 6040 - Legal Services:	**88,161.96**	**61,623.00**	**49,704.66**	**69,668.00**	**82,180.00**	**12,512.00**	**17.96%**
Function: 6050 - City Hall & Gen Buildings								
001.6050.5010.010	REGULAR-NON UNION	0.00	25,021.00	20,243.78	46,688.00	81,748.00	35,060.00	75.09%
001.6050.5010.040	REGULAR-PPME UNION	0.00	0.00	3,563.21	18,650.00	44,343.00	25,693.00	137.76%
001.6050.5020.040	OVERTIME-PPME UNION	0.00	0.00	4.23	0.00	0.00	0.00	0.00%
001.6050.5050.060	PART-TIME REGULAR	5,091.09	0.00	546.53	547.00	0.00	-547.00	-100.00%
001.6050.5060.060	TERM PAYOUTS-PT REG	76.23	0.00	0.00	0.00	0.00	0.00	0.00%
001.6050.5101.010	SOCIAL SECURITY-NON UNION	0.00	1,551.00	1,227.72	2,895.00	5,068.00	2,173.00	75.06%
001.6050.5101.040	SOCIAL SECURITY-PPME UNIOI	0.00	0.00	199.57	1,156.00	2,749.00	1,593.00	137.80%
001.6050.5101.060	SOCIAL SECURITY-PT REGULAR	320.36	0.00	33.89	34.00	0.00	-34.00	-100.00%
001.6050.5102.010	MEDICARE-NON UNION	0.00	363.00	287.10	677.00	1,185.00	508.00	75.04%
001.6050.5102.040	MEDICARE-PPME UNION	0.00	0.00	46.70	270.00	643.00	373.00	138.15%
001.6050.5102.060	MEDICARE-PT REGULAR	74.91	0.00	7.92	8.00	0.00	-8.00	-100.00%
001.6050.5111.010	IPERS-NON UNION	0.00	2,362.00	1,850.53	4,342.00	7,717.00	3,375.00	77.73%
001.6050.5111.040	IPERS-PPME UNION	0.00	0.00	336.79	1,761.00	4,186.00	2,425.00	137.71%
001.6050.5111.060	IPERS-PT REGULAR	480.60	0.00	51.59	0.00	0.00	0.00	0.00%
001.6050.5121.010	GRP INSUR-NON UNION	0.00	11,994.00	2,508.44	5,338.00	4,352.00	-986.00	-18.47%
001.6050.5121.040	GRP INSUR-PPME UNION	0.00	0.00	925.44	3,665.00	11,661.00	7,996.00	218.17%
001.6050.5123.010	WORKCOMP-NON UNION	0.00	619.00	601.44	1,139.00	2,846.00	1,707.00	149.87%
001.6050.5123.040	WORKCOMP-PPME UNION	0.00	0.00	135.84	710.00	1,688.00	978.00	137.75%
001.6050.5123.060	WORKCOMP-PT REGULAR	73.58	0.00	13.54	0.00	0.00	0.00	0.00%
001.6050.5251.000	LICENSE & PERMITS	0.00	325.00	0.00	300.00	300.00	0.00	0.00%
001.6050.5290.000	INSURANCE - GENERAL	6,702.25	7,206.00	0.00	11,326.00	13,591.00	2,265.00	20.00%
001.6050.5300.000	INSURANCE - TORT LIAB	272.83	261.00	0.00	190.00	228.00	38.00	20.00%
001.6050.5331.000	PAYMENTS-OTHER ENTITIES	0.00	3,000.00	0.00	0.00	0.00	0.00	0.00%
001.6050.5342.000	CONTRACT-OUTSIDE HELP	3,354.21	3,300.00	1,538.84	3,300.00	3,300.00	0.00	0.00%
001.6050.5344.000	CONTRACT-MAINTENANCE	4,106.54	5,600.00	2,293.20	5,600.00	9,500.00	3,900.00	69.64%
001.6050.5360.000	POSTAGE & SHIPPING	7.20	0.00	0.00	0.00	0.00	0.00	0.00%
001.6050.5410.000	REPAIRS & MAINTENANCE	8,756.28	3,300.00	8,269.62	10,000.00	10,000.00	0.00	0.00%
001.6050.5450.000	TELEPHONE/OTHR COMMNCT	3,874.56	4,000.00	2,590.45	4,000.00	4,000.00	0.00	0.00%
001.6050.5480.000	UTILITIES	0.00	0.00	0.00	0.00	0.00	0.00	0.00%
001.6050.5481.000	ELECTRICITY	1,611.41	3,000.00	1,154.05	3,000.00	3,000.00	0.00	0.00%
001.6050.5482.000	NATURAL GAS	0.00	0.00	10,267.38	17,500.00	9,000.00	-8,500.00	-48.57%

Budget Comparison Report

Account Number		2021-2022 Total Activity	2022-2023 Total Budget	2022-2023 YTD Activity Through Feb	Parent Budget 2022-2023 FY2023 Amend	Comparison 1 Budget 2023-2024 FY2024 Dept Request	Comparison 1 to Parent Budget Increase / (Decrease)	%
001.6050.5570.000	VEHICLE GAS	0.00	0.00	1,033.19	2,400.00	3,600.00	1,200.00	50.00%
001.6050.5600.000	OPERATING SUPPLIES	2,824.14	6,000.00	1,945.31	4,000.00	5,000.00	1,000.00	25.00%
001.6050.5605.000	OFFICE SUPPLIES	67.97	800.00	0.00	800.00	800.00	0.00	0.00%
001.6050.5611.000	BLDG,GRD OPER/MAINT SPLY	1,452.00	2,000.00	2,405.23	5,000.00	5,000.00	0.00	0.00%
001.6050.5704.000	MINOR SOFTWARE	0.00	0.00	137.43	150.00	150.00	0.00	0.00%
001.6050.5718.000	MINOR EQUIP, UNCLASSFIED	547.11	1,200.00	2,080.38	3,000.00	2,000.00	-1,000.00	-33.33%
001.6050.5776.000	BUILDINGS & IMPROVEMENTS	0.00	0.00	4.11	5.00	0.00	-5.00	-100.00%
	Total Function: 6050 - City Hall & Gen Buildings:	**39,693.27**	**81,902.00**	**66,303.45**	**158,451.00**	**237,655.00**	**79,204.00**	**49.99%**
Function: 6051 - Carnegie Bldg								
001.6051.5290.000	INSURANCE - GENERAL	2,497.40	2,774.00	0.00	3,292.00	3,950.00	658.00	19.99%
001.6051.5300.000	INSURANCE - TORT LIAB	134.36	125.00	0.00	111.00	133.00	22.00	19.82%
001.6051.5342.000	CONTRACT-OUTSIDE HELP	331.54	1,340.00	172.40	1,340.00	1,340.00	0.00	0.00%
001.6051.5344.000	CONTRACT-MAINTENANCE	3,483.39	5,100.00	2,979.02	5,100.00	5,100.00	0.00	0.00%
001.6051.5410.000	REPAIRS & MAINTENANCE	1,618.74	1,600.00	3,302.27	6,000.00	6,000.00	0.00	0.00%
001.6051.5481.000	ELECTRICITY	14,584.88	13,000.00	9,824.64	15,000.00	15,500.00	500.00	3.33%
001.6051.5482.000	NATURAL GAS	4,898.93	3,500.00	3,908.97	5,000.00	5,200.00	200.00	4.00%
001.6051.5600.000	OPERATING SUPPLIES	836.23	500.00	1,100.89	2,700.00	2,700.00	0.00	0.00%
001.6051.5611.000	BLDG,GRD OPER/MAINT SPLY	221.79	500.00	431.97	1,000.00	1,000.00	0.00	0.00%
001.6051.5718.000	MINOR EQUIP, UNCLASSIFIED	5,866.35	0.00	249.99	800.00	800.00	0.00	0.00%
	Total Function: 6051 - Carnegie Bldg:	**34,473.61**	**28,439.00**	**21,970.15**	**40,343.00**	**41,723.00**	**1,380.00**	**3.42%**
Function: 6070 - Data Processing,IT								
001.6070.5230.000	CONSULTING & PROF FEES	0.00	0.00	0.00	0.00	0.00	0.00	0.00%
001.6070.5300.000	INSURANCE - TORT LIAB	258.19	255.00	0.00	233.00	280.00	47.00	20.17%
001.6070.5342.000	CONTRACT-OUTSIDE HELP	20.00	500.00	440.00	2,000.00	2,000.00	0.00	0.00%
001.6070.5347.000	CONTRACT-SOFTWARE MAINT	59,522.91	59,000.00	53,173.98	80,000.00	70,000.00	-10,000.00	-12.50%
001.6070.5612.000	COMPUTER COMPONENTS	0.00	1,500.00	0.00	1,500.00	1,500.00	0.00	0.00%
001.6070.5703.000	MINOR COMPUTER	2,939.64	1,000.00	0.00	1,000.00	1,000.00	0.00	0.00%
001.6070.5704.000	MINOR SOFTWARE <$5,000	0.00	1,200.00	0.00	1,200.00	1,200.00	0.00	0.00%
001.6070.5718.000	MINOR EQUIP, UNCLASSFIED	0.00	0.00	1,659.00	1,659.00	0.00	-1,659.00	-100.00%
	Total Function: 6070 - Data Processing,IT:	**62,740.74**	**63,455.00**	**55,272.98**	**87,592.00**	**75,980.00**	**-11,612.00**	**-13.26%**
Function: 6075 - Cable TV								
001.6075.5300.000	INSURANCE - TORT LIAB	293.02	0.00	0.00	0.00	0.00	0.00	0.00%
	Total Function: 6075 - Cable TV:	**293.02**	**0.00**	**0.00**	**0.00**	**0.00**	**0.00**	**0.00%**
Function: 6900 - Other Gen Gov								
001.6900.5061.000	RHSA PAYOUTS	0.00	71,450.00	0.00	7,508.00	40,065.00	32,557.00	433.63%
001.6900.5290.000	INSURANCE - GENERAL	0.25	534.00	0.00	0.00	668.00	668.00	0.00%
001.6900.5300.000	INSURANCE - TORT LIAB	1.94	33.00	0.00	0.00	2.00	2.00	0.00%
001.6900.5341.000	FLEXIBLE BENEFIT CLAIMS	2,487.30	0.00	0.00	0.00	0.00	0.00	0.00%

Account Number		2021-2022 Total Activity	2022-2023 Total Budget	2022-2023 YTD Activity Through Feb	Parent Budget 2022-2023 FY2023 Amend	Comparison 1 Budget 2023-2024 FY2024 Dept Request	Comparison 1 to Parent Budget Increase / (Decrease)	%
001.6900.5342.000	CONTRACT-OUTSIDE HELP	3,675.48	600.00	1,552.87	6,215.00	7,600.00	1,385.00	22.28%
001.6900.5485.000	STORM WATER FEES	799.01	799.00	799.01	800.00	800.00	0.00	0.00%
001.6900.5570.000	VEHICLE GAS	0.00	1,200.00	0.00	1,200.00	1,200.00	0.00	0.00%
001.6900.5600.000	OPERATING SUPPLIES	548.31	0.00	882.78	1,000.00	1,000.00	0.00	0.00%
001.6900.5700.000	MINOR EQUIP 500-4999	0.00	1,000.00	0.00	1,000.00	1,000.00	0.00	0.00%
001.6900.5991.000	CHECKS RETURNED & COLLECT	22.60	150.00	0.00	150.00	150.00	0.00	0.00%
	Total Function: 6900 - Other Gen Gov:	**7,534.89**	**75,766.00**	**3,234.66**	**17,873.00**	**52,485.00**	**34,612.00**	**193.66%**
Function: 9000 - 9000								
001.9000.7500.110	TRANSFER OUT - RUT	0.00	0.00	2,231.36	2,232.00	0.00	-2,232.00	-100.00%
001.9000.7500.125	Transfer to TIF	8,601.50	0.00	0.00	0.00	0.00	0.00	0.00%
001.9000.7500.145	TRANSFER OUT - TORNADO GE	0.99	0.00	0.00	0.00	0.00	0.00	0.00%
001.9000.7500.149	TRANSFER OUT - FUND 149	4,558.93	0.00	0.00	0.00	0.00	0.00	0.00%
001.9000.7500.355	TRANSFER OUT - D&D	18,034.62	20,000.00	0.00	20,000.00	20,000.00	0.00	0.00%
001.9000.7500.690	TRANSFER OUT - TRANSIT	155,551.67	250,000.00	121,074.97	250,000.00	275,000.00	25,000.00	10.00%
	Total Function: 9000 - 9000:	**186,747.71**	**270,000.00**	**123,306.33**	**272,232.00**	**295,000.00**	**22,768.00**	**8.36%**
	Total Fund: 001 - GENERAL FUND:	**16,186,589.19**	**17,225,737.23**	**10,755,198.67**	**17,657,520.00**	**18,020,483.00**	**362,963.00**	**2.06%**
Fund: 030 - CAPITAL RESERVE								
Function: 1010 - Police Operations/Crime Prevention								
030.1010.5410.000	REPAIRS & MAINTENANCE	2,200.00	0.00	0.00	0.00	0.00	0.00	0.00%
030.1010.5565.000	VEHICLE OPER/MAINT SPPLY	1,508.80	0.00	850.00	0.00	0.00	0.00	0.00%
030.1010.5703.000	MINOR COMPUTER	6,682.23	0.00	7,003.54	0.00	0.00	0.00	0.00%
030.1010.5718.000	MINOR EQUIP, UNCLASSFIED	21,447.46	32,400.00	17,943.67	32,400.00	41,000.00	8,600.00	26.54%
030.1010.5740.000	COMPUTER EQUIP > $5,000	7,523.80	0.00	0.00	0.00	0.00	0.00	0.00%
030.1010.5750.000	OTHER CAP EQUIP > $5,000	96,919.78	130,000.00	60,387.01	190,000.00	198,000.00	8,000.00	4.21%
	Total Function: 1010 - Police Operations/Crime Prevention:	**136,282.07**	**162,400.00**	**86,184.22**	**222,400.00**	**239,000.00**	**16,600.00**	**7.46%**
Function: 1050 - Fire Department								
030.1050.5718.000	MINOR EQUIP, UNCLASSFIED	499.99	0.00	0.00	0.00	0.00	0.00	0.00%
030.1050.5750.000	OTHER CAP EQUIP > $5,000	27,840.00	35,600.00	29,454.91	38,843.00	41,388.00	2,545.00	6.55%
	Total Function: 1050 - Fire Department:	**28,339.99**	**35,600.00**	**29,454.91**	**38,843.00**	**41,388.00**	**2,545.00**	**6.55%**
Function: 1070 - Building Inspections								
030.1070.5750.000	OTHER CAP EQUIP > $5,000	0.00	2,500.00	2,500.00	2,500.00	0.00	-2,500.00	-100.00%
	Total Function: 1070 - Building Inspections:	**0.00**	**2,500.00**	**2,500.00**	**2,500.00**	**0.00**	**-2,500.00**	**-100.00%**
Function: 1071 - Rental Inspections								
030.1071.5750.000	OTHER CAP EQUIP > $5,000	0.00	2,500.00	2,500.00	2,500.00	0.00	-2,500.00	-100.00%
	Total Function: 1071 - Rental Inspections:	**0.00**	**2,500.00**	**2,500.00**	**2,500.00**	**0.00**	**-2,500.00**	**-100.00%**
Function: 2080 - Airport								
030.2080.5233.000	ENGINEERING FEES	0.00	0.00	0.00	0.00	50,000.00	50,000.00	0.00%

Budget Comparison Report

Account Number		2021-2022 Total Activity	2022-2023 Total Budget	2022-2023 YTD Activity Through Feb	Parent Budget 2022-2023 FY2023 Amend	Comparison 1 Budget 2023-2024 FY2024 Dept Request	Comparison 1 to Parent Budget Increase / (Decrease)	%
030.2080.5410.000	REPAIRS & MAINTENANCE	0.00	0.00	0.00	10,000.00	0.00	-10,000.00	-100.00%
	Total Function: 2080 - Airport:	**0.00**	**0.00**	**0.00**	**10,000.00**	**50,000.00**	**40,000.00**	**400.00%**
Function: 4010 - Library Services								
030.4010.5347.000	CONTRACT-SOFTWARE MAINT	1,000.00	0.00	19,461.92	19,462.00	20,435.00	973.00	5.00%
030.4010.5600.000	OPERATING SUPPLIES	6,316.00	0.00	0.00	0.00	0.00	0.00	0.00%
030.4010.5703.000	MINOR COMPUTER	9,089.90	0.00	0.00	0.00	0.00	0.00	0.00%
030.4010.5741.000	COMPUTER SOFTWARE > 5,00	18,552.84	19,110.00	0.00	0.00	0.00	0.00	0.00%
030.4010.5750.000	OTHER CAP EQUIP > $5,000	87,105.50	61,489.00	0.00	61,489.00	0.00	-61,489.00	-100.00%
	Total Function: 4010 - Library Services:	**122,064.24**	**80,599.00**	**19,461.92**	**80,951.00**	**20,435.00**	**-60,516.00**	**-74.76%**
Function: 4030 - Parks								
030.4030.5233.000	ENGINEERING FEES	0.00	0.00	3,995.78	0.00	0.00	0.00	0.00%
030.4030.5342.000	CONTRACT-OUTSIDE HELP	29,422.59	215,000.00	80,775.05	322,641.00	0.00	-322,641.00	-100.00%
030.4030.5410.000	REPAIRS & MAINTENANCE	0.00	0.00	0.00	0.00	15,000.00	15,000.00	0.00%
030.4030.5611.000	BLDG,GRD OPER/MAINT SPLY	1,479.00	0.00	5,123.07	0.00	0.00	0.00	0.00%
030.4030.5718.000	MINOR EQUIP, UNCLASSFIED	0.00	0.00	1,456.97	0.00	0.00	0.00	0.00%
030.4030.5750.000	OTHER CAP EQUIP > $5,000	50,908.84	87,000.00	162,632.20	107,750.00	75,000.00	-32,750.00	-30.39%
030.4030.5776.000	BUILDINGS & IMPROVEMENTS	12,735.60	25,000.00	17,472.12	12,736.00	120,000.00	107,264.00	842.21%
	Total Function: 4030 - Parks:	**94,546.03**	**327,000.00**	**271,455.19**	**443,127.00**	**210,000.00**	**-233,127.00**	**-52.61%**
Function: 4045 - Swimming Pools								
030.4045.5342.000	CONTRACT-OUTSIDE HELP	0.00	20,000.00	0.00	20,000.00	20,000.00	0.00	0.00%
030.4045.5600.000	OPERATING SUPPLIES	0.00	0.00	4,056.12	0.00	0.00	0.00	0.00%
030.4045.5718.000	MINOR EQUIP, UNCLASSFIED	4,954.27	0.00	0.00	0.00	0.00	0.00	0.00%
	Total Function: 4045 - Swimming Pools:	**4,954.27**	**20,000.00**	**4,056.12**	**20,000.00**	**20,000.00**	**0.00**	**0.00%**
Function: 5900 - Other Community and Economic Dev.								
030.5900.5750.000	OTHER CAP EQUIP > $5,000	222.49	0.00	0.00	0.00	0.00	0.00	0.00%
	Total Function: 5900 - Other Community and Economic Dev.:	**222.49**	**0.00**	**0.00**	**0.00**	**0.00**	**0.00**	**0.00%**
Function: 6020 - Clerk								
030.6020.5750.000	OTHER CAP EQUIP > $5,000	0.00	5,500.00	5,474.00	5,474.00	0.00	-5,474.00	-100.00%
	Total Function: 6020 - Clerk:	**0.00**	**5,500.00**	**5,474.00**	**5,474.00**	**0.00**	**-5,474.00**	**-100.00%**
Function: 6070 - Data Processing,IT								
030.6070.5612.000	COMPUTER COMPONENTS	138.00	0.00	0.00	0.00	0.00	0.00	0.00%
030.6070.5703.000	MINOR COMPUTER	12,259.47	22,500.00	2,567.55	22,500.00	22,500.00	0.00	0.00%
030.6070.5718.000	MINOR EQUIP, UNCLASSFIED	0.00	0.00	4,797.60	10,000.00	0.00	-10,000.00	-100.00%
030.6070.5740.000	COMPUTER EQUIP > $5,000	39,613.30	28,000.00	0.00	39,000.00	35,000.00	-4,000.00	-10.26%
	Total Function: 6070 - Data Processing,IT:	**52,010.77**	**50,500.00**	**7,365.15**	**71,500.00**	**57,500.00**	**-14,000.00**	**-19.58%**
Function: 9000 - 9000								
030.9000.7500.110	TRANSFER OUT - FUND 110 RL	0.00	0.00	0.00	0.00	8,100.00	8,100.00	0.00%

Account Number		2021-2022 Total Activity	2022-2023 Total Budget	2022-2023 YTD Activity Through Feb	Parent Budget 2022-2023 FY2023 Amend	Comparison 1 Budget 2023-2024 FY2024 Dept Request	Comparison 1 to Parent Budget Increase / (Decrease)	%
030.9000.7500.132	Transfer Out - Grants	0.00	110,000.00	0.00	0.00	0.00	0.00	0.00%
030.9000.7500.312	TRANSFER OUT - AIRPORT CAP	0.00	0.00	0.00	0.00	50,000.00	50,000.00	0.00%
	Total Function: 9000 - 9000:	**0.00**	**110,000.00**	**0.00**	**0.00**	**58,100.00**	**58,100.00**	**0.00%**
	Total Fund: 030 - CAPITAL RESERVE:	**438,419.86**	**796,599.00**	**428,451.51**	**897,295.00**	**696,423.00**	**-200,872.00**	**-22.39%**
Fund: 031 - CAPITAL RSRV-BLDG MAINT								
Function: 1099 - Police and Fire Building Exps								
031.1099.5776.000	BUILDING & IMPROVEMENTS	0.00	0.00	0.00	0.00	43,000.00	43,000.00	0.00%
	Total Function: 1099 - Police and Fire Building Exps:	**0.00**	**0.00**	**0.00**	**0.00**	**43,000.00**	**43,000.00**	**0.00%**
Function: 4010 - Library Services								
031.4010.5410.000	REPAIRS & MAINTENANCE	0.00	0.00	0.00	0.00	45,000.00	45,000.00	0.00%
031.4010.5750.000	OTHER CAP EQUIP > $5,000	0.00	0.00	0.00	0.00	0.00	0.00	0.00%
	Total Function: 4010 - Library Services:	**0.00**	**0.00**	**0.00**	**0.00**	**45,000.00**	**45,000.00**	**0.00%**
Function: 4065 - Coliseum								
031.4065.5233.000	ENGINEERING	0.00	0.00	4,950.00	7,242.00	0.00	-7,242.00	-100.00%
	Total Function: 4065 - Coliseum:	**0.00**	**0.00**	**4,950.00**	**7,242.00**	**0.00**	**-7,242.00**	**-100.00%**
Function: 6050 - City Hall & Gen Buildings								
031.6050.5410.000	REPAIRS & MAINTENANCE	0.00	0.00	12,615.94	12,616.00	0.00	-12,616.00	-100.00%
031.6050.5776.000	BUILDINGS & IMPROVEMENTS	79,831.65	12,500.00	-360.58	0.00	0.00	0.00	0.00%
	Total Function: 6050 - City Hall & Gen Buildings:	**79,831.65**	**12,500.00**	**12,255.36**	**12,616.00**	**0.00**	**-12,616.00**	**-100.00%**
Function: 6051 - Carnegie Bldg								
031.6051.5410.000	REPAIRS & MAINTENANCE	4,544.16	0.00	0.00	0.00	0.00	0.00	0.00%
031.6051.5776.000	BUILDINGS & IMPROVEMENTS	0.00	12,500.00	0.00	0.00	15,000.00	15,000.00	0.00%
	Total Function: 6051 - Carnegie Bldg:	**4,544.16**	**12,500.00**	**0.00**	**0.00**	**15,000.00**	**15,000.00**	**0.00%**
Function: 9000 - 9000								
031.9000.7500.133	TRANSFER OUT - FUND 133	0.00	33,750.00	0.00	0.00	26,775.00	26,775.00	0.00%
031.9000.7500.312	TRANSFER OUT - FUND 312	0.00	0.00	0.00	0.00	11,500.00	11,500.00	0.00%
	Total Function: 9000 - 9000:	**0.00**	**33,750.00**	**0.00**	**0.00**	**38,275.00**	**38,275.00**	**0.00%**
	Total Fund: 031 - CAPITAL RSRV-BLDG MAINT:	**84,375.81**	**58,750.00**	**17,205.36**	**19,858.00**	**141,275.00**	**121,417.00**	**611.43%**
Fund: 032 - CIP LARGE VEHICLE/EQUIPMENT								
Function: 1050 - Fire Department								
032.1050.5703.000	MINOR COMPUTER	4,638.27	0.00	0.00	0.00	0.00	0.00	0.00%
032.1050.5718.000	MINOR EQUIP,UNCLASSIFIED	565.17	0.00	0.00	0.00	0.00	0.00	0.00%
032.1050.5750.000	OTHER CAP EQUIP > $5,000	1,913.78	0.00	0.00	0.00	0.00	0.00	0.00%
	Total Function: 1050 - Fire Department:	**7,117.22**	**0.00**	**0.00**	**0.00**	**0.00**	**0.00**	**0.00%**
	Total Fund: 032 - CIP LARGE VEHICLE/EQUIPMENT:	**7,117.22**	**0.00**	**0.00**	**0.00**	**0.00**	**0.00**	**0.00%**

Budget Comparison Report

Account Number		2021-2022 Total Activity	2022-2023 Total Budget	2022-2023 YTD Activity Through Feb	Parent Budget 2022-2023 FY2023 Amend	Comparison 1 Budget 2023-2024 FY2024 Dept Request	Comparison 1 to Parent Budget Increase / (Decrease)	%
Fund: 110 - ROAD USE TAX								
Function: 2010 - Roads, Bridges, Sidewalks								
110.2010.5010.010	REGULAR-NON UNION	11,618.61	14,382.00	8,476.85	14,038.00	13,666.00	-372.00	-2.65%
110.2010.5101.010	SOCIAL SECURITY-NON UNION	691.71	892.00	506.26	870.00	847.00	-23.00	-2.64%
110.2010.5102.010	MEDICARE-NON UNION	161.78	209.00	118.40	204.00	198.00	-6.00	-2.94%
110.2010.5111.010	IPERS-NON UNION	1,096.76	1,358.00	800.21	1,325.00	1,290.00	-35.00	-2.64%
110.2010.5121.010	GRP INSUR-NON UNION	1,183.40	2,456.00	994.54	1,882.00	1,741.00	-141.00	-7.49%
110.2010.5123.010	WORKCOMP-NON UNION	9.61	79.00	28.23	71.00	53.00	-18.00	-25.35%
110.2010.5132.000	CLOTHING EXPENSE	11,960.05	9,500.00	6,965.70	12,000.00	9,500.00	-2,500.00	-20.83%
110.2010.5151.000	PHYSICALS/IMMUNIZATIONS	0.00	1,000.00	0.00	1,000.00	1,000.00	0.00	0.00%
110.2010.5210.000	ADVERTISING & LEGAL PUB	0.00	0.00	15.00	15.00	0.00	-15.00	-100.00%
110.2010.5230.000	CONSULTING & PROF FEES	31,022.00	35,000.00	2,117.50	7,200.00	5,000.00	-2,200.00	-30.56%
110.2010.5231.000	ACCOUNTING FEES	0.00	18,256.00	12,170.80	18,256.00	19,100.00	844.00	4.62%
110.2010.5233.000	ENGINEERING FEES	720.00	1,000.00	0.00	1,000.00	1,000.00	0.00	0.00%
110.2010.5234.000	LEGAL EXP	0.00	0.00	832.50	2,000.00	2,000.00	0.00	0.00%
110.2010.5251.000	LICENSE & PERMITS	1,495.00	250.00	178.50	250.00	250.00	0.00	0.00%
110.2010.5280.000	DUES, MEMBER, SUBSCRIPTN	0.00	0.00	277.50	300.00	300.00	0.00	0.00%
110.2010.5290.000	INSURANCE - GENERAL	0.00	372.00	-138.00	0.00	0.00	0.00	0.00%
110.2010.5342.000	CONTRACT-OUTSIDE HELP	170,533.12	75,000.00	296,916.02	419,524.00	75,000.00	-344,524.00	-82.12%
110.2010.5344.000	CONTRACT-MAINTENANCE	1,822.00	3,500.00	1,522.02	3,500.00	3,500.00	0.00	0.00%
110.2010.5347.000	CONTRACT-SOFTWARE MAINT	2,753.98	3,000.00	2,981.53	3,150.00	3,150.00	0.00	0.00%
110.2010.5352.000	CONTRACT-TREE REMOVAL	63,820.00	120,000.00	2,700.00	120,000.00	40,000.00	-80,000.00	-66.67%
110.2010.5359.000	TOWING SERVICES	1,540.00	3,500.00	0.00	3,500.00	3,500.00	0.00	0.00%
110.2010.5360.000	POSTAGE & SHIPPING	66.42	100.00	0.00	100.00	100.00	0.00	0.00%
110.2010.5380.000	RENTS & LEASES	1,607.71	800.00	672.73	1,200.00	1,200.00	0.00	0.00%
110.2010.5386.000	CONTRACT LAWN CARE	9,836.00	13,000.00	7,766.00	13,000.00	12,500.00	-500.00	-3.85%
110.2010.5410.000	REPAIRS & MAINTENANCE	13,929.34	10,000.00	7,049.11	11,000.00	12,000.00	1,000.00	9.09%
110.2010.5450.000	TELEPHONE/OTHR COMMNCT	2,158.12	2,500.00	1,796.73	2,500.00	2,500.00	0.00	0.00%
110.2010.5460.000	CONFERENCE EXPENSE	525.00	4,500.00	0.00	1,500.00	1,500.00	0.00	0.00%
110.2010.5470.000	TRAINING	20.00	0.00	0.00	0.00	0.00	0.00	0.00%
110.2010.5481.000	ELECTRICITY	11,888.12	12,000.00	8,663.29	13,000.00	13,500.00	500.00	3.85%
110.2010.5482.000	NATURAL GAS	7,347.99	9,000.00	5,483.07	9,000.00	9,000.00	0.00	0.00%
110.2010.5489.000	SAFETY EQUIP/SUPPLIES	383.39	1,000.00	1,539.34	2,000.00	1,500.00	-500.00	-25.00%
110.2010.5565.000	VEHICLE OPER/MAINT SPPLY	56,656.29	75,000.00	35,032.52	75,000.00	75,000.00	0.00	0.00%
110.2010.5570.000	VEHICLE GAS	12,460.67	10,000.00	9,264.49	17,000.00	17,000.00	0.00	0.00%
110.2010.5571.000	VEHICLE DIESEL FUEL	20,650.54	30,000.00	25,669.08	40,000.00	40,000.00	0.00	0.00%
110.2010.5600.000	OPERATING SUPPLIES	56,087.05	46,000.00	39,744.00	58,000.00	60,000.00	2,000.00	3.45%
110.2010.5605.000	OFFICE SUPPLIES	48.90	500.00	0.00	500.00	500.00	0.00	0.00%
110.2010.5611.000	BLDG,GRD OPER/MAINT SPLY	21,553.09	25,000.00	4,866.01	25,000.00	25,000.00	0.00	0.00%

Budget Comparison Report

Account Number		2021-2022 Total Activity	2022-2023 Total Budget	2022-2023 YTD Activity Through Feb	Parent Budget 2022-2023 FY2023 Amend	Comparison 1 Budget 2023-2024 FY2024 Dept Request	Comparison 1 to Parent Budget Increase / (Decrease)	%
110.2010.5612.000	COMPUTER COMPONENTS	854.34	1,000.00	0.00	1,000.00	1,000.00	0.00	0.00%
110.2010.5617.000	RM-OTHER	13,917.37	10,000.00	20,107.21	33,000.00	25,000.00	-8,000.00	-24.24%
110.2010.5618.000	RM-COLDMIX	31,890.08	30,000.00	9,493.08	30,000.00	30,000.00	0.00	0.00%
110.2010.5619.000	RM-HOTMIX	17,793.36	30,000.00	0.00	25,000.00	25,000.00	0.00	0.00%
110.2010.5620.000	RM-CRUSHED ROCK	41,869.67	15,000.00	17,812.51	40,000.00	40,000.00	0.00	0.00%
110.2010.5621.000	SR-SAND	624.18	200.00	0.00	200.00	200.00	0.00	0.00%
110.2010.5626.000	TS-SIGNS, POSTS & SPPLYS	12,487.98	20,000.00	12,412.17	20,000.00	20,000.00	0.00	0.00%
110.2010.5627.000	TS-BARRICADES, SUPPLIES	9,952.98	7,000.00	1,300.12	7,000.00	7,000.00	0.00	0.00%
110.2010.5628.000	TS-PAVEMENT MARKING	55,944.44	30,000.00	355.70	45,000.00	45,000.00	0.00	0.00%
110.2010.5703.000	MINOR COMPUTER	484.99	1,000.00	26.00	7,500.00	2,000.00	-5,500.00	-73.33%
110.2010.5704.000	MINOR SOFTWARE <$5,000	713.42	750.00	0.00	750.00	750.00	0.00	0.00%
110.2010.5718.000	MINOR EQUIP, UNCLASSFIED	43,586.32	35,000.00	21,589.34	35,000.00	35,000.00	0.00	0.00%
110.2010.5750.000	OTHER CAP EQUIP > $5,000	478,136.80	795,000.00	540,637.16	552,487.00	449,588.00	-102,899.00	-18.62%
110.2010.5776.000	BUILDINGS & IMPROVEMENTS	173.16	0.00	0.00	0.00	65,000.00	65,000.00	0.00%
	Total Function: 2010 - Roads, Bridges, Sidewalks:	**1,224,075.74**	**1,504,104.00**	**1,108,743.22**	**1,675,822.00**	**1,197,933.00**	**-477,889.00**	**-28.52%**
Function: 2011 - Sidewalks								
110.2011.5342.000	CONTRACT OUTSIDE HELP	78,636.21	0.00	10,712.22	10,712.00	0.00	-10,712.00	-100.00%
110.2011.5351.000	CONTRACT-CONCRETE REPAIR	0.00	0.00	0.00	0.00	0.00	0.00	0.00%
	Total Function: 2011 - Sidewalks:	**78,636.21**	**0.00**	**10,712.22**	**10,712.00**	**0.00**	**-10,712.00**	**-100.00%**
Function: 2012 - Street Construction								
110.2012.5233.000	ENGINEERING FEES	61,086.36	0.00	0.00	0.00	0.00	0.00	0.00%
110.2012.5331.000	PAYMENTS-OTHER ENTITIES	0.00	383,500.00	0.00	240,650.00	383,500.00	142,850.00	59.36%
110.2012.5348.000	CONTRACT-OTHER	0.00	428,520.00	0.00	0.00	0.00	0.00	0.00%
110.2012.5349.000	CONTRACT-BRIDGE & CULVRT	13,592.27	0.00	0.00	0.00	0.00	0.00	0.00%
110.2012.5600.000	OPERATING SUPPLIES	415.69	0.00	0.00	0.00	0.00	0.00	0.00%
	Total Function: 2012 - Street Construction:	**75,094.32**	**812,020.00**	**0.00**	**240,650.00**	**383,500.00**	**142,850.00**	**59.36%**
Function: 2030 - Street Lighting								
110.2030.5151.000	Physicals/Immunizations	0.00	0.00	82.79	83.00	0.00	-83.00	-100.00%
110.2030.5210.000	ADVERTISING & LEGAL PUB	0.00	0.00	5.33	6.00	0.00	-6.00	-100.00%
110.2030.5216.000	BACKGROUND CHECKS	9.00	0.00	3.00	3.00	0.00	-3.00	-100.00%
110.2030.5342.000	CONTRACT-OUTSIDE HELP	6,104.40	2,000.00	1,426.99	2,000.00	2,000.00	0.00	0.00%
110.2030.5410.000	REPAIRS AND MAINTENANCE	0.00	0.00	202.56	150.00	1,000.00	850.00	566.67%
110.2030.5481.000	ELECTRICITY	240,641.86	230,000.00	165,630.03	250,000.00	260,000.00	10,000.00	4.00%
110.2030.5600.000	OPERATING SUPPLIES	312.26	3,000.00	72.83	2,000.00	2,500.00	500.00	25.00%
110.2030.5718.000	MINOR EQUIP, UNCLASSFIED	77.42	0.00	151.65	300.00	300.00	0.00	0.00%
	Total Function: 2030 - Street Lighting:	**247,144.94**	**235,000.00**	**167,575.18**	**254,542.00**	**265,800.00**	**11,258.00**	**4.42%**
Function: 2040 - Traffic Safety								
110.2040.5132.000	CLOTHING EXPENSE	2,877.03	3,000.00	1,082.00	3,000.00	3,000.00	0.00	0.00%

Budget Comparison Report

Account Number		2021-2022 Total Activity	2022-2023 Total Budget	2022-2023 YTD Activity Through Feb	Parent Budget 2022-2023 FY2023 Amend	Comparison 1 Budget 2023-2024 FY2024 Dept Request	Comparison 1 to Parent Budget Increase / (Decrease)	%
110.2040.5151.000	PHYSICALS/IMMUNIZATIONS	0.00	0.00	514.68	515.00	0.00	-515.00	-100.00%
110.2040.5210.000	ADVERTISING & LEGAL PUB	165.90	0.00	16.99	17.00	0.00	-17.00	-100.00%
110.2040.5216.000	BACKGROUND CHECKS	24.00	0.00	18.00	18.00	0.00	-18.00	-100.00%
110.2040.5230.000	CONSULTING & PROF FEES	634.60	500.00	405.50	500.00	500.00	0.00	0.00%
110.2040.5233.000	ENGINEERING FEES	0.00	0.00	0.00	0.00	15,000.00	15,000.00	0.00%
110.2040.5251.000	LICENSE & PERMITS	12.00	100.00	454.30	455.00	100.00	-355.00	-78.02%
110.2040.5280.000	DUES, MEMBER, SUBSCRIPTN	336.00	0.00	277.50	278.00	0.00	-278.00	-100.00%
110.2040.5342.000	CONTRACT-OUTSIDE HELP	881.90	1,500.00	0.00	1,500.00	15,000.00	13,500.00	900.00%
110.2040.5344.000	CONTRACT-MAINTENANCE	4,800.00	7,000.00	0.00	5,000.00	5,000.00	0.00	0.00%
110.2040.5347.000	CONTRACT-CMPTR TECH SPPR	0.00	0.00	0.00	0.00	0.00	0.00	0.00%
110.2040.5360.000	POSTAGE & SHIPPING	0.00	10.00	0.00	10.00	10.00	0.00	0.00%
110.2040.5410.000	REPAIRS & MAINTENANCE	132.50	1,500.00	3,747.92	4,000.00	1,500.00	-2,500.00	-62.50%
110.2040.5450.000	TELEPHONE/OTHR COMMNCT	2,028.13	2,300.00	1,332.32	2,300.00	2,300.00	0.00	0.00%
110.2040.5460.000	CONFERENCE EXPENSE	275.00	250.00	0.00	275.00	275.00	0.00	0.00%
110.2040.5481.000	ELECTRICITY	13,676.01	18,000.00	9,769.90	18,000.00	18,000.00	0.00	0.00%
110.2040.5482.000	NATURAL GAS	338.78	600.00	0.00	600.00	600.00	0.00	0.00%
110.2040.5565.000	VEHICLE OPER/MAINT SPPLY	2,409.69	3,000.00	3,402.36	3,000.00	3,000.00	0.00	0.00%
110.2040.5570.000	VEHICLE GAS	3,805.82	3,500.00	1,758.80	3,500.00	3,500.00	0.00	0.00%
110.2040.5571.000	VEHICLE DIESEL FUEL	92.83	400.00	0.00	400.00	400.00	0.00	0.00%
110.2040.5600.000	OPERATING SUPPLIES	1,888.08	5,000.00	823.25	5,000.00	5,000.00	0.00	0.00%
110.2040.5605.000	OFFICE SUPPLIES	49.75	100.00	60.24	100.00	100.00	0.00	0.00%
110.2040.5702.000	MINOR OFFICE FURN/EQUIP	40.00	0.00	0.00	0.00	0.00	0.00	0.00%
110.2040.5703.000	MINOR COMPUTER	84.00	0.00	0.00	2,000.00	2,000.00	0.00	0.00%
110.2040.5704.000	MINOR SOFTWARE <$5,000	0.00	0.00	137.44	150.00	150.00	0.00	0.00%
110.2040.5718.000	MINOR EQUIP, UNCLASSFIED	12,282.10	10,000.00	128.22	10,000.00	10,000.00	0.00	0.00%
110.2040.5750.000	OTHER CAP EQUIP > $5,000	9,500.00	32,000.00	0.00	14,000.00	15,000.00	1,000.00	7.14%
110.2040.5780.000	TRAFFIC SIGNALS	0.00	0.00	3,634.00	5,000.00	5,000.00	0.00	0.00%
	Total Function: 2040 - Traffic Safety:	**56,334.12**	**88,760.00**	**27,563.42**	**79,618.00**	**105,435.00**	**25,817.00**	**32.43%**
Function: 2050 - Snow Removal								
110.2050.5342.000	CONTRACT-OUTSIDE HELP	0.00	8,000.00	0.00	0.00	0.00	0.00	0.00%
110.2050.5344.000	CONTRACT-MAINTENANCE	4,500.00	4,500.00	3,334.94	4,500.00	4,500.00	0.00	0.00%
110.2050.5380.000	RENTS & LEASES	9,980.00	0.00	2,857.75	3,000.00	4,000.00	1,000.00	33.33%
110.2050.5410.000	REPAIRS & MAINTENANCE	165.00	1,000.00	909.51	2,000.00	1,000.00	-1,000.00	-50.00%
110.2050.5565.000	VEHICLE OPER/MAINT SPPLY	23,931.62	13,000.00	11,350.35	13,000.00	13,000.00	0.00	0.00%
110.2050.5570.000	VEHICLE GAS	450.76	4,000.00	438.30	4,000.00	4,000.00	0.00	0.00%
110.2050.5571.000	VEHICLE DIESEL FUEL	10,365.50	25,000.00	15,634.76	25,000.00	25,000.00	0.00	0.00%
110.2050.5600.000	OPERATING SUPPLIES	5,009.92	5,000.00	11,221.79	10,000.00	6,000.00	-4,000.00	-40.00%
110.2050.5622.000	SR-SODIUM CHLORIDE	149,050.95	150,000.00	148,464.58	148,465.00	155,000.00	6,535.00	4.40%
110.2050.5623.000	SR-CALCIUM CHLORIDE	0.00	5,000.00	0.00	5,000.00	5,000.00	0.00	0.00%

Budget Comparison Report

Account Number		2021-2022 Total Activity	2022-2023 Total Budget	2022-2023 YTD Activity Through Feb	Parent Budget 2022-2023 FY2023 Amend	Comparison 1 Budget 2023-2024 FY2024 Dept Request	Comparison 1 to Parent Budget Increase / (Decrease)	%
110.2050.5625.000	SR-ANTI ICING-NEW STRTS	0.00	5,000.00	0.00	5,000.00	5,000.00	0.00	0.00%
110.2050.5718.000	MINOR EQUIP, UNCLASSFIED	0.00	0.00	526.59	1,000.00	1,000.00	0.00	0.00%
110.2050.5750.000	OTHER CAP EQUIP > $5,000	0.00	0.00	5,500.00	5,500.00	50,000.00	44,500.00	809.09%
	Total Function: 2050 - Snow Removal:	**203,453.75**	**220,500.00**	**200,238.57**	**226,465.00**	**273,500.00**	**47,035.00**	**20.77%**
Function: 2060 - Highway Engineering								
110.2060.5132.000	CLOTHING EXPENSE	0.00	200.00	0.00	200.00	200.00	0.00	0.00%
110.2060.5151.000	PHYSICALS/IMMUNIZATIONS	0.00	100.00	0.00	100.00	100.00	0.00	0.00%
110.2060.5210.000	ADVERTISING & LEGAL PUB	368.07	600.00	129.08	600.00	600.00	0.00	0.00%
110.2060.5230.000	CONSULTING & PROF FEES	21,740.00	30,000.00	10,655.00	50,000.00	50,000.00	0.00	0.00%
110.2060.5233.000	ENGINEERING FEES	630.00	8,000.00	0.00	8,000.00	8,000.00	0.00	0.00%
110.2060.5251.000	LICENSE & PERMITS	62.90	300.00	100.00	300.00	300.00	0.00	0.00%
110.2060.5280.000	DUES, MEMBER, SUBSCRIPTN	4,540.00	2,500.00	830.00	2,500.00	2,500.00	0.00	0.00%
110.2060.5344.000	CONTRACT-MAINTENANCE	95.85	1,000.00	1,113.90	1,500.00	1,500.00	0.00	0.00%
110.2060.5347.000	CONTRACT-SOFTWARE MAINT	19,716.98	20,300.00	3,419.60	5,500.00	5,500.00	0.00	0.00%
110.2060.5351.000	CONTRACT-CONCRETE REPAIR	1,900.00	2,000.00	0.00	0.00	0.00	0.00	0.00%
110.2060.5360.000	POSTAGE & SHIPPING	49.78	250.00	0.00	250.00	250.00	0.00	0.00%
110.2060.5410.000	REPAIRS & MAINTENANCE	1,017.00	2,000.00	0.00	2,000.00	2,000.00	0.00	0.00%
110.2060.5450.000	TELEPHONE/OTHR COMMNCT	5,883.21	8,900.00	1,964.45	4,500.00	5,000.00	500.00	11.11%
110.2060.5460.000	CONFERENCE EXPENSE	0.00	7,500.00	275.00	500.00	4,500.00	4,000.00	800.00%
110.2060.5462.000	TRAVEL - OTHER	10.00	250.00	0.00	250.00	250.00	0.00	0.00%
110.2060.5465.000	TRAVEL - HOTEL/MOTEL	221.76	500.00	0.00	500.00	500.00	0.00	0.00%
110.2060.5471.000	TRAINING	480.00	0.00	300.00	1,000.00	0.00	-1,000.00	-100.00%
110.2060.5472.000	MILEAGE REIMBURSE	141.96	0.00	0.00	0.00	0.00	0.00	0.00%
110.2060.5485.000	STORM WATER FEES	3,180.53	4,500.00	3,180.53	3,600.00	3,600.00	0.00	0.00%
110.2060.5565.000	VEHICLE OPER/MAINT SPPLY	1,029.24	2,000.00	434.84	2,000.00	2,000.00	0.00	0.00%
110.2060.5570.000	VEHICLE GAS	3,718.68	4,000.00	3,043.30	5,500.00	5,500.00	0.00	0.00%
110.2060.5600.000	OPERATING SUPPLIES	449.75	3,000.00	332.79	3,000.00	3,000.00	0.00	0.00%
110.2060.5605.000	OFFICE SUPPLIES	556.65	500.00	421.38	500.00	500.00	0.00	0.00%
110.2060.5612.000	COMPUTER COMPONENTS	55.00	1,500.00	0.00	1,500.00	1,500.00	0.00	0.00%
110.2060.5685.000	SURVEY SUPPLIES	139.48	1,500.00	12.99	1,500.00	1,500.00	0.00	0.00%
110.2060.5702.000	MINOR OFFICE FURN/EQUIP	0.00	2,000.00	0.00	2,000.00	2,000.00	0.00	0.00%
110.2060.5703.000	MINOR COMPUTER	51.39	9,000.00	211.95	14,000.00	2,000.00	-12,000.00	-85.71%
110.2060.5704.000	MINOR SOFTWARE <$5,000	198.00	2,000.00	1,299.00	2,000.00	2,000.00	0.00	0.00%
110.2060.5718.000	MINOR EQUIP, UNCLASSFIED	127.52	5,000.00	491.91	5,000.00	5,000.00	0.00	0.00%
110.2060.5740.000	COMPUTER EQUIP > $5,000	0.00	0.00	0.00	0.00	6,500.00	6,500.00	0.00%
110.2060.5741.000	COMPUTER SOFTWARE > 5,00	0.00	6,000.00	12,889.12	12,889.00	0.00	-12,889.00	-100.00%
110.2060.5750.000	OTHER CAP EQUIP > $5,000	34,752.04	16,000.00	0.00	0.00	20,000.00	20,000.00	0.00%
	Total Function: 2060 - Highway Engineering:	**101,115.79**	**141,400.00**	**41,104.84**	**131,189.00**	**136,300.00**	**5,111.00**	**3.90%**

Budget Comparison Report

Account Number		2021-2022 Total Activity	2022-2023 Total Budget	2022-2023 YTD Activity Through Feb	Parent Budget 2022-2023 FY2023 Amend	Comparison 1 Budget 2023-2024 FY2024 Dept Request	Comparison 1 to Parent Budget Increase / (Decrease)	%
Function: 2070 - Street Cleaning								
110.2070.5410.000	REPAIRS & MAINTENANCE	0.00	0.00	146.00	500.00	0.00	-500.00	-100.00%
110.2070.5565.000	VEHICLE OPER/MAINT SPPLY	5,785.23	5,000.00	2,074.36	4,500.00	5,000.00	500.00	11.11%
110.2070.5571.000	VEHICLE DIESEL FUEL	5,766.66	4,500.00	4,617.96	9,000.00	9,000.00	0.00	0.00%
110.2070.5600.000	OPERATING SUPPLIES	0.00	2,500.00	2,672.00	2,672.00	2,500.00	-172.00	-6.44%
	Total Function: 2070 - Street Cleaning:	**11,551.89**	**12,000.00**	**9,510.32**	**16,672.00**	**16,500.00**	**-172.00**	**-1.03%**
Function: 9000 - 9000								
110.9000.7500.001	TRANSFER OUT - GENERAL	1,116,774.01	1,211,244.00	577,154.24	1,161,940.00	1,176,363.00	14,423.00	1.24%
110.9000.7500.132	TRANSFER OUT - GRANT STATI	0.00	0.00	0.00	0.00	0.00	0.00	0.00%
110.9000.7500.311	TRANSFER OUT - FUND 311 RI	0.00	0.00	0.00	104,620.00	0.00	-104,620.00	-100.00%
110.9000.7500.362	TRANSFER OUT - FUND 362	0.00	375,223.00	0.00	0.00	642,803.00	642,803.00	0.00%
110.9000.7500.395	TRANSFER OUT - FUND 395	0.00	428,520.00	0.00	149,881.00	0.00	-149,881.00	-100.00%
	Total Function: 9000 - 9000:	**1,116,774.01**	**2,014,987.00**	**577,154.24**	**1,416,441.00**	**1,819,166.00**	**402,725.00**	**28.43%**
	Total Fund: 110 - ROAD USE TAX:	**3,114,180.77**	**5,028,771.00**	**2,142,602.01**	**4,052,111.00**	**4,198,134.00**	**146,023.00**	**3.60%**
Fund: 112 - EMPLOYEE BENEFITS FUND								
Function: 9000 - 9000								
112.9000.7500.001	TRANSFER OUT - GENERAL	2,608,912.25	2,935,235.00	1,323,503.77	2,898,190.00	3,070,871.00	172,681.00	5.96%
	Total Function: 9000 - 9000:	**2,608,912.25**	**2,935,235.00**	**1,323,503.77**	**2,898,190.00**	**3,070,871.00**	**172,681.00**	**5.96%**
	Total Fund: 112 - EMPLOYEE BENEFITS FUND:	**2,608,912.25**	**2,935,235.00**	**1,323,503.77**	**2,898,190.00**	**3,070,871.00**	**172,681.00**	**5.96%**
Fund: 117 - POLICE/FIRE RETIREMENT								
Function: 1010 - Police Operations/Crime Prevention								
117.1010.5114.000	CITY SHARE PENSION	7,012.88	10,900.00	0.00	0.00	0.00	0.00	0.00%
	Total Function: 1010 - Police Operations/Crime Prevention:	**7,012.88**	**10,900.00**	**0.00**	**0.00**	**0.00**	**0.00**	**0.00%**
Function: 9000 - 9000								
117.9000.7500.001	TR TO GENERAL	1,237,682.69	1,200,148.00	560,984.78	1,151,802.00	1,180,148.00	28,346.00	2.46%
	Total Function: 9000 - 9000:	**1,237,682.69**	**1,200,148.00**	**560,984.78**	**1,151,802.00**	**1,180,148.00**	**28,346.00**	**2.46%**
	Total Fund: 117 - POLICE/FIRE RETIREMENT:	**1,244,695.57**	**1,211,048.00**	**560,984.78**	**1,151,802.00**	**1,180,148.00**	**28,346.00**	**2.46%**
Fund: 119 - EMERGENCY FUND								
Function: 9000 - 9000								
119.9000.7500.001	TR TO GENERAL	251,339.05	255,879.00	131,473.54	255,908.00	262,974.00	7,066.00	2.76%
	Total Function: 9000 - 9000:	**251,339.05**	**255,879.00**	**131,473.54**	**255,908.00**	**262,974.00**	**7,066.00**	**2.76%**
	Total Fund: 119 - EMERGENCY FUND:	**251,339.05**	**255,879.00**	**131,473.54**	**255,908.00**	**262,974.00**	**7,066.00**	**2.76%**
Fund: 121 - LOCAL OPTION SALES TAX								
Function: 1010 - Police Operations/Crime Prevention								
121.1010.5230.000	CONSULTING & PROF FEES	2,500.00	0.00	2,500.00	2,500.00	0.00	-2,500.00	-100.00%

Budget Comparison Report

Account Number		2021-2022 Total Activity	2022-2023 Total Budget	2022-2023 YTD Activity Through Feb	Parent Budget 2022-2023 FY2023 Amend	Comparison 1 Budget 2023-2024 FY2024 Dept Request	Comparison 1 to Parent Budget Increase / (Decrease)	%
121.1010.5750.000	OTHER CAP EQUIP > $5,000	0.00	0.00	0.00	150,000.00	0.00	-150,000.00	-100.00%
Total Function: 1010 - Police Operations/Crime Prevention:		**2,500.00**	**0.00**	**2,500.00**	**152,500.00**	**0.00**	**-152,500.00**	**-100.00%**
Function: 1050 - Fire Department								
121.1050.5230.000	CONSULTING & PROF FEES	2,500.00	0.00	2,500.00	2,500.00	0.00	-2,500.00	-100.00%
Total Function: 1050 - Fire Department:		**2,500.00**	**0.00**	**2,500.00**	**2,500.00**	**0.00**	**-2,500.00**	**-100.00%**
Function: 2011 - Sidewalks								
121.2011.5331.000	PAYMENTS-OTHER ENTITIES	0.00	0.00	0.00	50,000.00	0.00	-50,000.00	-100.00%
121.2011.5980.000	REFUNDS/REIMB	0.00	0.00	0.00	0.00	0.00	0.00	0.00%
Total Function: 2011 - Sidewalks:		**0.00**	**0.00**	**0.00**	**50,000.00**	**0.00**	**-50,000.00**	**-100.00%**
Function: 2012 - Street Construction								
121.2012.5718.000	MINOR EQUIPMENT	0.00	0.00	33,697.29	0.00	0.00	0.00	0.00%
Total Function: 2012 - Street Construction:		**0.00**	**0.00**	**33,697.29**	**0.00**	**0.00**	**0.00**	**0.00%**
Function: 2020 - Parking								
121.2020.5342.000	CONTRACT - OUTSIDE HELP	0.00	0.00	0.00	71,500.00	0.00	-71,500.00	-100.00%
121.2020.5785.000	LAND IMPROVEMENTS	0.00	71,500.00	0.00	0.00	0.00	0.00	0.00%
Total Function: 2020 - Parking:		**0.00**	**71,500.00**	**0.00**	**71,500.00**	**0.00**	**-71,500.00**	**-100.00%**
Function: 4030 - Parks								
121.4030.5233.000	ENGINEERING FEES	29,500.00	0.00	0.00	0.00	0.00	0.00	0.00%
121.4030.5342.000	CONTRACT-OUTSIDE HELP	0.00	0.00	0.00	336,340.00	0.00	-336,340.00	-100.00%
Total Function: 4030 - Parks:		**29,500.00**	**0.00**	**0.00**	**336,340.00**	**0.00**	**-336,340.00**	**-100.00%**
Function: 4065 - Coliseum								
121.4065.5342.000	CONTRACT - OUTSIDE HELP	0.00	0.00	12,000.00	43,000.00	0.00	-43,000.00	-100.00%
Total Function: 4065 - Coliseum:		**0.00**	**0.00**	**12,000.00**	**43,000.00**	**0.00**	**-43,000.00**	**-100.00%**
Function: 5010 - Community Beautification								
121.5010.5230.000	CONSULTING & PROF FEES	5,000.00	0.00	0.00	0.00	0.00	0.00	0.00%
121.5010.5331.000	PAYMENTS-OTHER ENTITIES	0.00	0.00	8,000.00	8,000.00	0.00	-8,000.00	-100.00%
121.5010.5718.000	MINOR EQUIPMENT	0.00	0.00	0.00	160,000.00	0.00	-160,000.00	-100.00%
Total Function: 5010 - Community Beautification:		**5,000.00**	**0.00**	**8,000.00**	**168,000.00**	**0.00**	**-168,000.00**	**-100.00%**
Function: 5020 - Economic Development								
121.5020.5230.000	CONSULTING & PROF FEES	0.00	0.00	14,495.00	119,995.00	0.00	-119,995.00	-100.00%
121.5020.5331.000	PAYMENTS-OTHER ENTITIES	250,000.00	0.00	0.00	0.00	95,000.00	95,000.00	0.00%
121.5020.5781.000	LAND ACQ	0.00	0.00	79,689.15	79,690.00	0.00	-79,690.00	-100.00%
121.5020.5980.000	REFUNDS/REIMB	0.00	0.00	0.00	0.00	0.00	0.00	0.00%
Total Function: 5020 - Economic Development:		**250,000.00**	**0.00**	**94,184.15**	**199,685.00**	**95,000.00**	**-104,685.00**	**-52.43%**

Budget Comparison Report

Account Number		2021-2022 Total Activity	2022-2023 Total Budget	2022-2023 YTD Activity Through Feb	Parent Budget 2022-2023 FY2023 Amend	Comparison 1 Budget 2023-2024 FY2024 Dept Request	Comparison 1 to Parent Budget Increase / (Decrease)	%
Function: 5030 - Housing & Urban Renewal								
121.5030.5331.000	PAYMENTS-OTHER ENTITIES	0.00	0.00	5,000.00	250,000.00	0.00	-250,000.00	-100.00%
Total Function: 5030 - Housing & Urban Renewal:		**0.00**	**0.00**	**5,000.00**	**250,000.00**	**0.00**	**-250,000.00**	**-100.00%**
Function: 5040 - Planning & Zoning								
121.5040.5230.000	CONSULTING & PROF FEES	62,910.50	0.00	0.00	0.00	0.00	0.00	0.00%
Total Function: 5040 - Planning & Zoning:		**62,910.50**	**0.00**	**0.00**	**0.00**	**0.00**	**0.00**	**0.00%**
Function: 5900 - Other Community and Economic Dev.								
121.5900.5230.000	CONSULTING & PROF FEES	24,781.00	0.00	14,950.00	15,219.00	0.00	-15,219.00	-100.00%
121.5900.5331.000	PAYMENTS-OTHER ENTITIES	115,000.00	0.00	0.00	200,000.00	0.00	-200,000.00	-100.00%
Total Function: 5900 - Other Community and Economic Dev.:		**139,781.00**	**0.00**	**14,950.00**	**215,219.00**	**0.00**	**-215,219.00**	**-100.00%**
Function: 6011 - Council								
121.6011.5230.000	CONSULTING AND PROF FEES	0.00	20,495.00	0.00	0.00	0.00	0.00	0.00%
121.6011.5331.000	PAYMENTS-OTHER ENTITIES	5,000.00	5,000.00	0.00	50,000.00	5,000.00	-45,000.00	-90.00%
Total Function: 6011 - Council:		**5,000.00**	**25,495.00**	**0.00**	**50,000.00**	**5,000.00**	**-45,000.00**	**-90.00%**
Function: 6025 - HR								
121.6025.5230.000	CONSULTING & PROF FEES	0.00	0.00	0.00	23,400.00	0.00	-23,400.00	-100.00%
Total Function: 6025 - HR:		**0.00**	**0.00**	**0.00**	**23,400.00**	**0.00**	**-23,400.00**	**-100.00%**
Function: 6070 - Data Processing,IT								
121.6070.5741.000	COMPUTER SOFTWARE . $5,0(	12,867.75	0.00	0.00	0.00	0.00	0.00	0.00%
Total Function: 6070 - Data Processing,IT:		**12,867.75**	**0.00**	**0.00**	**0.00**	**0.00**	**0.00**	**0.00%**
Function: 9000 - 9000								
121.9000.7500.001	TR TO GENERAL	0.00	0.00	126,160.00	126,160.00	328,526.00	202,366.00	160.40%
121.9000.7500.010	TR TO CASH FLOW RESERVE	99,023.00	91,512.00	0.00	91,512.00	288,000.00	196,488.00	214.71%
121.9000.7500.132	TR TO GRANTS STATE/LOCAL	32,908.71	220,000.00	0.00	92,091.00	375,000.00	282,909.00	307.21%
121.9000.7500.149	TRANSFER OUT - FEMA WINDS	0.00	0.00	0.00	0.00	0.00	0.00	0.00%
121.9000.7500.183	TRANSFER OUT - FUND 183 ED	0.00	0.00	0.00	12,364.00	0.00	-12,364.00	-100.00%
121.9000.7500.200	TRANSFER OUT - DEBT SERV	2,879,760.00	3,641,775.00	1,494,226.76	3,641,775.00	3,333,609.00	-308,166.00	-8.46%
121.9000.7500.311	TRANSFER OUT - FUND 311	248,836.75	689,030.00	0.00	1,053,079.00	25,000.00	-1,028,079.00	-97.63%
121.9000.7500.340	TR TO BIKE PATH	0.00	0.00	0.00	56,599.00	0.00	-56,599.00	-100.00%
121.9000.7500.363	TRANSFER OUT - FUND 363 GC	0.00	0.00	0.00	128,026.00	0.00	-128,026.00	-100.00%
121.9000.7500.364	TRANSFER OUT - FUND 364 GC	0.00	0.00	0.00	100,000.00	115,250.00	15,250.00	15.25%
121.9000.7500.395	TR TO ECON DEVEL PROJECT	22,779.20	284,235.00	0.00	284,235.00	0.00	-284,235.00	-100.00%
121.9000.7500.611	TRANSSFER OUT - FUND 611	0.00	0.00	18,580.00	18,580.00	0.00	-18,580.00	-100.00%
121.9000.7500.690	TRANSFER OUT - FUND 690	0.00	0.00	8,090.00	8,090.00	0.00	-8,090.00	-100.00%
121.9000.7500.740	TRANSFER OUT - FUND 740	0.00	0.00	4,170.00	4,170.00	0.00	-4,170.00	-100.00%
Total Function: 9000 - 9000:		**3,283,307.66**	**4,926,552.00**	**1,651,226.76**	**5,616,681.00**	**4,465,385.00**	**-1,151,296.00**	**-20.50%**
Total Fund: 121 - LOCAL OPTION SALES TAX:		**3,793,366.91**	**5,023,547.00**	**1,824,058.20**	**7,178,825.00**	**4,565,385.00**	**-2,613,440.00**	**-36.40%**

Budget Comparison Report

Account Number		2021-2022 Total Activity	2022-2023 Total Budget	2022-2023 YTD Activity Through Feb	Parent Budget 2022-2023 FY2023 Amend	Comparison 1 Budget 2023-2024 FY2024 Dept Request	Comparison 1 to Parent Budget Increase / (Decrease)	%
Fund: 125 - TAX INCREMENT FINANCING								
Function: 5020 - Economic Development								
125.5020.5331.000	PAYMENTS-OTHER ENTITIES	203,489.20	186,090.00	76,310.59	215,212.00	628,743.00	413,531.00	192.15%
125.5020.5980.000	REFUNDS/REIMB	37,009.13	0.00	0.00	0.00	0.00	0.00	0.00%
Total Function: 5020 - Economic Development:		**240,498.33**	**186,090.00**	**76,310.59**	**215,212.00**	**628,743.00**	**413,531.00**	**192.15%**
Function: 9000 - 9000								
125.9000.7500.001	TR TO GENERAL	136,401.60	188,743.00	110,749.66	372,694.00	127,915.00	-244,779.00	-65.68%
125.9000.7500.200	TR TO GO DEBT SRV	394,090.85	386,365.00	0.00	386,365.00	325,806.00	-60,559.00	-15.67%
Total Function: 9000 - 9000:		**530,492.45**	**575,108.00**	**110,749.66**	**759,059.00**	**453,721.00**	**-305,338.00**	**-40.23%**
Total Fund: 125 - TAX INCREMENT FINANCING:		**770,990.78**	**761,198.00**	**187,060.25**	**974,271.00**	**1,082,464.00**	**108,193.00**	**11.11%**
Fund: 126 - TIF-LMI								
Function: 5020 - Economic Development								
126.5020.5980.000	REFUNDS/REIMB	27,044.99	0.00	0.00	0.00	0.00	0.00	0.00%
Total Function: 5020 - Economic Development:		**27,044.99**	**0.00**	**0.00**	**0.00**	**0.00**	**0.00**	**0.00%**
Function: 9000 - 9000								
126.9000.7500.125	TRANSFER OUT - FUND 125	913.11	0.00	0.00	0.00	0.00	0.00	0.00%
Total Function: 9000 - 9000:		**913.11**	**0.00**	**0.00**	**0.00**	**0.00**	**0.00**	**0.00%**
Total Fund: 126 - TIF-LMI:		**27,958.10**	**0.00**	**0.00**	**0.00**	**0.00**	**0.00**	**0.00%**
Fund: 130 - CITY TORT LIABILITY								
Function: 1010 - Police Operations/Crime Prevention								
130.1010.5260.000	DAMAGES/TORT LIAB CLAIMS	17,555.14	30,000.00	5,000.00	10,000.00	30,000.00	20,000.00	200.00%
130.1010.5410.000	REPAIRS & MAINTENANCE	33,833.27	0.00	24,376.19	30,000.00	0.00	-30,000.00	-100.00%
130.1010.5565.000	VEHICLE OPER/MAINT SPPLY	4,130.81	0.00	0.00	0.00	0.00	0.00	0.00%
130.1010.5600.000	OPERATING SUPPLIES	4,452.62	0.00	0.00	0.00	0.00	0.00	0.00%
130.1010.5718.000	MINOR EQUIP, UNCLASSFIED	0.00	0.00	2,407.03	10,000.00	0.00	-10,000.00	-100.00%
Total Function: 1010 - Police Operations/Crime Prevention:		**59,971.84**	**30,000.00**	**31,783.22**	**50,000.00**	**30,000.00**	**-20,000.00**	**-40.00%**
Function: 1050 - Fire Department								
130.1050.5342.000	CONTRACT-OUTSIDE HELP	1,800.00	0.00	0.00	0.00	0.00	0.00	0.00%
130.1050.5413.000	VEHICLE REPAIRS & MAINTEN/	1,501.00	0.00	0.00	0.00	0.00	0.00	0.00%
130.1050.5718.000	MINOR EQUIP, UNCLASSFIED	0.00	0.00	4,540.00	4,540.00	0.00	-4,540.00	-100.00%
Total Function: 1050 - Fire Department:		**3,301.00**	**0.00**	**4,540.00**	**4,540.00**	**0.00**	**-4,540.00**	**-100.00%**
Function: 1075 - Code Enforcement								
130.1075.5410.000	REPAIRS & MAINTENANCE	0.00	0.00	4,118.78	4,119.00	0.00	-4,119.00	-100.00%
Total Function: 1075 - Code Enforcement:		**0.00**	**0.00**	**4,118.78**	**4,119.00**	**0.00**	**-4,119.00**	**-100.00%**
Function: 1099 - Police and Fire Building Exps								
130.1099.5342.000	CONTRACT-OUTSIDE HELP	1,248.75	0.00	3,746.25	3,750.00	0.00	-3,750.00	-100.00%

Budget Comparison Report

Account Number		2021-2022 Total Activity	2022-2023 Total Budget	2022-2023 YTD Activity Through Feb	Parent Budget 2022-2023 FY2023 Amend	Comparison 1 Budget 2023-2024 FY2024 Dept Request	Comparison 1 to Parent Budget Increase / (Decrease)	%
130.1099.5410.000	REPAIRS & MAINTENANCE	0.00	0.00	11,025.00	11,025.00	0.00	-11,025.00	-100.00%
Total Function: 1099 - Police and Fire Building Exps:		**1,248.75**	**0.00**	**14,771.25**	**14,775.00**	**0.00**	**-14,775.00**	**-100.00%**
Function: 2010 - Roads, Bridges, Sidewalks								
130.2010.5260.000	DAMAGES/TORT LIAB CLAIMS	470.05	10,000.00	0.00	0.00	10,000.00	10,000.00	0.00%
130.2010.5410.000	REPAIRS & MAINTENANCE	13,435.69	0.00	4,677.95	10,000.00	0.00	-10,000.00	-100.00%
Total Function: 2010 - Roads, Bridges, Sidewalks:		**13,905.74**	**10,000.00**	**4,677.95**	**10,000.00**	**10,000.00**	**0.00**	**0.00%**
Function: 2030 - Street Lighting								
130.2030.5600.000	OPERATING SUPPLIES	8,364.71	0.00	0.00	0.00	0.00	0.00	0.00%
Total Function: 2030 - Street Lighting:		**8,364.71**	**0.00**	**0.00**	**0.00**	**0.00**	**0.00**	**0.00%**
Function: 2040 - Traffic Safety								
130.2040.5010.010	REGULAR-NON UNION	834.48	0.00	0.00	0.00	0.00	0.00	0.00%
130.2040.5010.040	REGULAR - PPME UNION	1,725.96	0.00	0.00	0.00	0.00	0.00	0.00%
130.2040.5101.010	SOCIAL SECURITY-NON UNION	50.94	0.00	0.00	0.00	0.00	0.00	0.00%
130.2040.5101.040	SOCIAL SECURITY - PPME UNIC	99.06	0.00	0.00	0.00	0.00	0.00	0.00%
130.2040.5102.010	MEDICARE-NON UNION	11.91	0.00	0.00	0.00	0.00	0.00	0.00%
130.2040.5102.040	MEDICARE-PPME UNION	23.17	0.00	0.00	0.00	0.00	0.00	0.00%
130.2040.5111.010	IPERS-NON UNION	78.77	0.00	0.00	0.00	0.00	0.00	0.00%
130.2040.5111.040	IPERS-PPME UNION	162.93	0.00	0.00	0.00	0.00	0.00	0.00%
130.2040.5121.040	GRP INSUR-PPME UNION	436.28	0.00	0.00	0.00	0.00	0.00	0.00%
130.2040.5410.000	REPAIRS & MAINTENANCE	315.00	0.00	0.00	0.00	0.00	0.00	0.00%
130.2040.5600.000	OPERATING SUPPLIES	1,500.00	0.00	0.00	0.00	0.00	0.00	0.00%
130.2040.5780.000	TRAFFIC SIGNALS	48,500.00	0.00	0.00	0.00	0.00	0.00	0.00%
Total Function: 2040 - Traffic Safety:		**53,738.50**	**0.00**	**0.00**	**0.00**	**0.00**	**0.00**	**0.00%**
Function: 2050 - Snow Removal								
130.2050.5260.000	DAMAGES/TORT LIAB CLAIMS	75.00	0.00	0.00	0.00	0.00	0.00	0.00%
Total Function: 2050 - Snow Removal:		**75.00**	**0.00**	**0.00**	**0.00**	**0.00**	**0.00**	**0.00%**
Function: 2080 - Airport								
130.2080.5260.000	DAMAGES/TORT LIAB CLAIMS	11,380.00	0.00	0.00	0.00	0.00	0.00	0.00%
130.2080.5342.000	CONTRACT-OUTSIDE HELP	326,372.25	0.00	29,211.35	29,212.00	0.00	-29,212.00	-100.00%
130.2080.5410.000	REPAIRS & MAINTENANCE	305,903.50	0.00	0.00	0.00	0.00	0.00	0.00%
130.2080.5600.000	OPERATING SUPPLIES	0.00	0.00	0.00	4,000.00	0.00	-4,000.00	-100.00%
130.2080.5980.000	REFUNDS/REIMB - AIRPORT	0.00	0.00	180.00	180.00	0.00	-180.00	-100.00%
Total Function: 2080 - Airport:		**643,655.75**	**0.00**	**29,391.35**	**33,392.00**	**0.00**	**-33,392.00**	**-100.00%**
Function: 4010 - Library Services								
130.4010.5410.000	REPAIRS & MAINTENANCE	7,500.00	0.00	0.00	0.00	0.00	0.00	0.00%
Total Function: 4010 - Library Services:		**7,500.00**	**0.00**	**0.00**	**0.00**	**0.00**	**0.00**	**0.00%**

Budget Comparison Report

Account Number		2021-2022 Total Activity	2022-2023 Total Budget	2022-2023 YTD Activity Through Feb	Parent Budget 2022-2023 FY2023 Amend	Comparison 1 Budget 2023-2024 FY2024 Dept Request	Comparison 1 to Parent Budget Increase / (Decrease)	%
Function: 4030 - Parks								
130.4030.5342.000	CONTRACT-OUTSIDE HELP	36,618.58	0.00	4,580.00	5,200.00	0.00	-5,200.00	-100.00%
130.4030.5410.000	REPAIRS & MAINTENANCE	5,275.00	0.00	0.00	0.00	0.00	0.00	0.00%
	Total Function: 4030 - Parks:	**41,893.58**	**0.00**	**4,580.00**	**5,200.00**	**0.00**	**-5,200.00**	**-100.00%**
Function: 6050 - City Hall & Gen Buildings								
130.6050.5410.000	REPAIRS & MAINTENANCE	530.00	0.00	0.00	0.00	0.00	0.00	0.00%
	Total Function: 6050 - City Hall & Gen Buildings:	**530.00**	**0.00**	**0.00**	**0.00**	**0.00**	**0.00**	**0.00%**
Function: 8050 - Transit								
130.8050.5410.000	REPAIRS & MAINT	67,134.94	0.00	0.00	0.00	0.00	0.00	0.00%
	Total Function: 8050 - Transit:	**67,134.94**	**0.00**	**0.00**	**0.00**	**0.00**	**0.00**	**0.00%**
Function: 9000 - 9000								
130.9000.7500.140	TRANSFER OUT P&R DONATIO	0.00	0.00	0.00	41,614.00	0.00	-41,614.00	-100.00%
130.9000.7500.156	TRANSFER OUT - FUND 156	0.00	0.00	0.00	54,124.00	0.00	-54,124.00	-100.00%
130.9000.7500.170	TRANSFER OUT - FUND 170	0.00	0.00	0.00	3,091.00	0.00	-3,091.00	-100.00%
130.9000.7500.312	TRANSFER OUT - FUND 312	0.00	0.00	8,380.38	8,381.00	0.00	-8,381.00	-100.00%
130.9000.7500.615	TRANSFER OUT - FUND 615	0.00	0.00	43,016.27	43,017.00	0.00	-43,017.00	-100.00%
	Total Function: 9000 - 9000:	**0.00**	**0.00**	**51,396.65**	**150,227.00**	**0.00**	**-150,227.00**	**-100.00%**
	Total Fund: 130 - CITY TORT LIABILITY:	**901,319.81**	**40,000.00**	**145,259.20**	**272,253.00**	**40,000.00**	**-232,253.00**	**-85.31%**
Fund: 132 - GRANTS-STATE/LOCAL AGENCIES								
Function: 2040 - Traffic Safety								
132.2040.5780.000	TRAFFIC SIGNALS	0.00	0.00	0.00	60,000.00	0.00	-60,000.00	-100.00%
	Total Function: 2040 - Traffic Safety:	**0.00**	**0.00**	**0.00**	**60,000.00**	**0.00**	**-60,000.00**	**-100.00%**
Function: 4030 - Parks								
132.4030.5233.000	ENGINEERING FEES	148,485.97	0.00	0.00	3,996.00	0.00	-3,996.00	-100.00%
132.4030.5342.000	CONTRACT-OUTSIDE HELP	3,959.96	176,250.00	60,098.48	62,362.00	0.00	-62,362.00	-100.00%
	Total Function: 4030 - Parks:	**152,445.93**	**176,250.00**	**60,098.48**	**66,358.00**	**0.00**	**-66,358.00**	**-100.00%**
Function: 5020 - Economic Development								
132.5020.5331.000	PAYMENTS-OTHER ENTITIES	533,357.80	2,470,572.00	495,427.50	1,379,692.00	1,303,883.00	-75,809.00	-5.49%
132.5020.5342.000	CONTRACT-OUTSIDE HELP	251,945.71	1,150,000.00	36,508.20	87,091.00	1,150,000.00	1,062,909.00	1,220.46%
	Total Function: 5020 - Economic Development:	**785,303.51**	**3,620,572.00**	**531,935.70**	**1,466,783.00**	**2,453,883.00**	**987,100.00**	**67.30%**
	Total Fund: 132 - GRANTS-STATE/LOCAL AGENCIES:	**937,749.44**	**3,796,822.00**	**592,034.18**	**1,593,141.00**	**2,453,883.00**	**860,742.00**	**54.03%**
Fund: 133 - UNDESIGNATED FEDERAL GRANTS								
Function: 2900 - Other Public Works								
133.2900.5010.010	REGULAR-NON UNION	697.68	0.00	2,874.24	0.00	0.00	0.00	0.00%
133.2900.5101.010	SOCIAL SECURITY-NON UNION	41.94	0.00	172.34	0.00	0.00	0.00	0.00%
133.2900.5102.010	MEDICARE-NON UNION	9.79	0.00	40.31	0.00	0.00	0.00	0.00%

Account Number		2021-2022 Total Activity	2022-2023 Total Budget	2022-2023 YTD Activity Through Feb	Parent Budget 2022-2023 FY2023 Amend	Comparison 1 Budget 2023-2024 FY2024 Dept Request	Comparison 1 to Parent Budget Increase / (Decrease)	%
133.2900.5111.010	IPERS-NON UNION	65.87	0.00	271.33	0.00	0.00	0.00	0.00%
133.2900.5121.010	GRP INSUR-NON UNION	81.09	0.00	366.11	0.00	0.00	0.00	0.00%
133.2900.5123.010	WORKCOMP-NON UNION	0.62	0.00	4.70	0.00	0.00	0.00	0.00%
133.2900.5342.000	CONTRACT - OUTSIDE HELP	26,688.31	181,000.00	88,054.27	140,000.00	140,000.00	0.00	0.00%
133.2900.5460.000	CONFERENCE EXPENSE	200.00	1,000.00	163.31	500.00	500.00	0.00	0.00%
133.2900.5465.000	TRAVEL -HOTEL/MOTEL	0.00	0.00	583.40	584.00	1,000.00	416.00	71.23%
	Total Function: 2900 - Other Public Works:	**27,785.30**	**182,000.00**	**92,530.01**	**141,084.00**	**141,500.00**	**416.00**	**0.29%**
Function: 4065 - Coliseum								
133.4065.5342.000	CONTRACT - OUTSIDE HELP	0.00	0.00	0.00	0.00	244,050.00	244,050.00	0.00%
133.4065.5750.000	OTHER CAP EQUIP > $5,000	0.00	0.00	0.00	0.00	0.00	0.00	0.00%
	Total Function: 4065 - Coliseum:	**0.00**	**0.00**	**0.00**	**0.00**	**244,050.00**	**244,050.00**	**0.00%**
	Total Fund: 133 - UNDESIGNATED FEDERAL GRANTS:	**27,785.30**	**182,000.00**	**92,530.01**	**141,084.00**	**385,550.00**	**244,466.00**	**173.28%**
Fund: 140 - PARK & REC DONATION FUND								
Function: 4030 - Parks								
140.4030.5342.000	CONTRACT-OUTSIDE HELP	4,334.98	50,000.00	8,478.64	50,000.00	50,000.00	0.00	0.00%
140.4030.5380.000	RENTS & LEASES	0.00	0.00	65.00	65.00	0.00	-65.00	-100.00%
140.4030.5410.000	REPAIRS & MAINTENANCE	0.00	0.00	2,351.83	500.00	0.00	-500.00	-100.00%
140.4030.5450.000	TELEPHONE/OTHR COMMNCT	1,559.40	0.00	1,039.60	1,700.00	0.00	-1,700.00	-100.00%
140.4030.5600.000	OPERATING SUPPLIES	3,035.05	0.00	10,119.07	6,000.00	0.00	-6,000.00	-100.00%
140.4030.5609.000	AGRICULTURAL SUPPLIES	0.00	2,000.00	0.00	2,000.00	2,000.00	0.00	0.00%
140.4030.5611.000	BLDG,GRD OPER/MAINT SPLY	6,378.97	2,000.00	6,757.70	10,000.00	2,000.00	-8,000.00	-80.00%
140.4030.5718.000	MINOR EQUIP, UNCLASSFIED	10,296.49	900.00	4,810.00	2,000.00	900.00	-1,100.00	-55.00%
	Total Function: 4030 - Parks:	**25,604.89**	**54,900.00**	**33,621.84**	**72,265.00**	**54,900.00**	**-17,365.00**	**-24.03%**
Function: 4041 - Youth Recreation & Camps								
140.4041.5600.000	OPERATING SUPPLIES	0.00	0.00	174.90	500.00	0.00	-500.00	-100.00%
140.4041.5601.000	PROMOTION/PROGRAM SPPL\	0.00	0.00	338.36	0.00	0.00	0.00	0.00%
140.4041.5613.000	MERCHANDISE FOR RESALE	0.00	0.00	63.36	0.00	0.00	0.00	0.00%
	Total Function: 4041 - Youth Recreation & Camps:	**0.00**	**0.00**	**576.62**	**500.00**	**0.00**	**-500.00**	**-100.00%**
Function: 9000 - 9000								
140.9000.7500.133	TRANSFER OUT - FUND 133	0.00	0.00	0.00	0.00	82,275.00	82,275.00	0.00%
140.9000.7500.760	TRANSFER OUT - P&R CONCES	0.00	0.00	0.00	20,000.00	0.00	-20,000.00	-100.00%
	Total Function: 9000 - 9000:	**0.00**	**0.00**	**0.00**	**20,000.00**	**82,275.00**	**62,275.00**	**311.38%**
	Total Fund: 140 - PARK & REC DONATION FUND:	**25,604.89**	**54,900.00**	**34,198.46**	**92,765.00**	**137,175.00**	**44,410.00**	**47.87%**
Fund: 142 - SOFTBALL ASSOCIATION FUND								
Function: 4030 - Parks								
142.4030.5010.090	REGULAR-P&R UNION	0.00	0.00	0.00	0.00	0.00	0.00	0.00%
142.4030.5030.070	PART-TIME TEMPORARY	7,662.88	14,500.00	8,501.77	14,500.00	14,500.00	0.00	0.00%

Budget Comparison Report

Account Number		2021-2022 Total Activity	2022-2023 Total Budget	2022-2023 YTD Activity Through Feb	Parent Budget 2022-2023 FY2023 Amend	Comparison 1 Budget 2023-2024 FY2024 Dept Request	Comparison 1 to Parent Budget Increase / (Decrease)	%
142.4030.5101.070	SOCIAL SECURITY-PT TEMP	475.10	899.00	527.10	899.00	899.00	0.00	0.00%
142.4030.5101.090	SOCIAL SECURITY-P&R UNION	0.00	0.00	0.00	0.00	0.00	0.00	0.00%
142.4030.5102.070	MEDICARE-TEMPORARY	111.10	210.00	123.28	210.00	210.00	0.00	0.00%
142.4030.5102.090	MEDICARE-P&R UNION	0.00	0.00	0.00	0.00	0.00	0.00	0.00%
142.4030.5111.090	IPERS-P&R UNION	0.00	0.00	0.00	0.00	0.00	0.00	0.00%
142.4030.5121.090	GRP INSUR-P&R UNION	0.00	0.00	0.00	0.00	0.00	0.00	0.00%
142.4030.5123.070	WORKCOMP-TEMPORARY	123.69	421.00	247.27	422.00	422.00	0.00	0.00%
142.4030.5123.090	WORKCOMP-P&R UNION	0.00	0.00	0.00	0.00	0.00	0.00	0.00%
142.4030.5342.000	CONTRACT-OUTSIDE HELP	7,266.55	6,000.00	2,656.25	6,000.00	6,000.00	0.00	0.00%
142.4030.5344.000	CONTRACT-MAINTENANCE	1,647.25	200.00	99.50	200.00	200.00	0.00	0.00%
142.4030.5410.000	REPAIRS & MAINTENANCE	246.49	600.00	140.00	600.00	600.00	0.00	0.00%
142.4030.5481.000	ELECTRICITY	6,802.17	5,800.00	4,181.28	5,800.00	5,800.00	0.00	0.00%
142.4030.5562.000	GROUNDS EQUIP MAINT SPLY	1,319.62	900.00	0.00	900.00	900.00	0.00	0.00%
142.4030.5600.000	OPERATING SUPPLIES	0.00	700.00	0.00	700.00	700.00	0.00	0.00%
142.4030.5611.000	BLDG,GRD OPER/MAINT SPLY	1,754.76	400.00	1,090.01	2,000.00	400.00	-1,600.00	-80.00%
142.4030.5620.000	RM-CRUSHED ROCK	216.32	0.00	0.00	0.00	0.00	0.00	0.00%
142.4030.5718.000	MINOR EQUIP, UNCLASSFIED	288.76	150.00	0.00	150.00	150.00	0.00	0.00%
	Total Function: 4030 - Parks:	**27,914.69**	**30,780.00**	**17,566.46**	**32,381.00**	**30,781.00**	**-1,600.00**	**-4.94%**
	Total Fund: 142 - SOFTBALL ASSOCIATION FUND:	**27,914.69**	**30,780.00**	**17,566.46**	**32,381.00**	**30,781.00**	**-1,600.00**	**-4.94%**
Fund: 144 - LIVE HEALTHY IOWA								
Function: 4040 - Recreation								
144.4040.5030.070	PART-TIME TEMPORARY	0.00	500.00	0.00	500.00	500.00	0.00	0.00%
144.4040.5101.070	SOCIAL SECURITY-PT TEMP	0.00	31.00	0.00	31.00	31.00	0.00	0.00%
144.4040.5102.070	MEDICARE-TEMPORARY	0.00	7.00	0.00	7.00	7.00	0.00	0.00%
144.4040.5123.070	WORKCOMP-TEMPORARY	0.00	15.00	0.00	15.00	15.00	0.00	0.00%
144.4040.5132.000	CLOTHING EXPENSE	0.00	5,000.00	0.00	5,000.00	5,000.00	0.00	0.00%
144.4040.5342.000	CONTRACT-OUTSIDE HELP	0.00	1,300.00	0.00	1,300.00	1,300.00	0.00	0.00%
144.4040.5600.000	OPERATING SUPPLIES	0.00	694.00	0.00	694.00	694.00	0.00	0.00%
	Total Function: 4040 - Recreation:	**0.00**	**7,547.00**	**0.00**	**7,547.00**	**7,547.00**	**0.00**	**0.00%**
	Total Fund: 144 - LIVE HEALTHY IOWA :	**0.00**	**7,547.00**	**0.00**	**7,547.00**	**7,547.00**	**0.00**	**0.00%**
Fund: 145 - TORNADO GENERAL								
Function: 4030 - Parks								
145.4030.5750.000	OTHER CAP EQUIP > $5,000	0.00	0.00	0.00	0.00	40,000.00	40,000.00	0.00%
	Total Function: 4030 - Parks:	**0.00**	**0.00**	**0.00**	**0.00**	**40,000.00**	**40,000.00**	**0.00%**
Function: 9000 - 9000								
145.9000.7500.110	TRANSFER OUT - FUND 145	0.00	0.00	0.00	0.00	141,000.00	141,000.00	0.00%
145.9000.7500.130	TRANSFER OUT - FUND 130	0.00	0.00	7,450.00	7,450.00	0.00	-7,450.00	-100.00%
145.9000.7500.618	TRANSFER OUT - WPCP TORN	0.00	0.00	0.00	0.00	0.00	0.00	0.00%

Budget Comparison Report

Account Number		2021-2022 Total Activity	2022-2023 Total Budget	2022-2023 YTD Activity Through Feb	Parent Budget 2022-2023 FY2023 Amend	Comparison 1 Budget 2023-2024 FY2024 Dept Request	Comparison 1 to Parent Budget Increase / (Decrease)	%
145.9000.7500.742	TRANSFER OUT - STORM/SEW	0.00	0.00	0.00	0.00	0.00	0.00	0.00%
	Total Function: 9000 - 9000:	**0.00**	**0.00**	**7,450.00**	**7,450.00**	**141,000.00**	**133,550.00**	**1,792.62%**
	Total Fund: 145 - TORNADO GENERAL:	**0.00**	**0.00**	**7,450.00**	**7,450.00**	**181,000.00**	**173,550.00**	**2,329.53%**
Fund: 148 - FEMA-COVID19								
Function: 1010 - Police Operations/Crime Prevention								
148.1010.5600.000	OPERATING SUPPLIES	0.00	0.00	0.00	0.00	0.00	0.00	0.00%
	Total Function: 1010 - Police Operations/Crime Prevention:	**0.00**	**0.00**	**0.00**	**0.00**	**0.00**	**0.00**	**0.00%**
Function: 1050 - Fire Department								
148.1050.5600.000	OPERATING SUPPLIES	2,700.55	0.00	1,368.10	2,700.00	0.00	-2,700.00	-100.00%
148.1050.5630.000	EMS SUPPLIES	4,939.92	0.00	912.26	1,800.00	0.00	-1,800.00	-100.00%
	Total Function: 1050 - Fire Department:	**7,640.47**	**0.00**	**2,280.36**	**4,500.00**	**0.00**	**-4,500.00**	**-100.00%**
Function: 2010 - Roads, Bridges, Sidewalks								
148.2010.5600.000	OPERATING SUPPLIES	77.34	0.00	0.00	0.00	0.00	0.00	0.00%
148.2010.5611.000	BLDG,GRD OPER/MAINT SPLY	0.00	0.00	233.85	500.00	0.00	-500.00	-100.00%
	Total Function: 2010 - Roads, Bridges, Sidewalks:	**77.34**	**0.00**	**233.85**	**500.00**	**0.00**	**-500.00**	**-100.00%**
Function: 4010 - Library Services								
148.4010.5600.000	OPERATING SUPPLIES	2,216.11	0.00	0.00	0.00	0.00	0.00	0.00%
	Total Function: 4010 - Library Services:	**2,216.11**	**0.00**	**0.00**	**0.00**	**0.00**	**0.00**	**0.00%**
Function: 6021 - Finance								
148.6021.5010.010	REGULAR-NON UNION	372.55	0.00	1,214.46	0.00	0.00	0.00	0.00%
148.6021.5101.010	SOCIAL SECURITY-NON UNION	21.31	0.00	69.42	0.00	0.00	0.00	0.00%
148.6021.5102.010	MEDICARE-NON UNION	4.99	0.00	16.25	0.00	0.00	0.00	0.00%
148.6021.5111.010	IPERS-NON UNION	35.17	0.00	114.65	0.00	0.00	0.00	0.00%
148.6021.5121.010	GRP INSUR-NON UNION	80.09	0.00	255.51	0.00	0.00	0.00	0.00%
148.6021.5123.010	WORKCOMP-NON UNION	0.33	0.00	1.99	0.00	0.00	0.00	0.00%
148.6021.5600.000	OPERATING SUPPLIES	38.55	0.00	0.00	0.00	0.00	0.00	0.00%
	Total Function: 6021 - Finance:	**552.99**	**0.00**	**1,672.28**	**0.00**	**0.00**	**0.00**	**0.00%**
Function: 6025 - HR								
148.6025.5600.000	OPERATING SUPPLIES	842.35	0.00	0.00	0.00	0.00	0.00	0.00%
	Total Function: 6025 - HR:	**842.35**	**0.00**	**0.00**	**0.00**	**0.00**	**0.00**	**0.00%**
Function: 6050 - City Hall & Gen Buildings								
148.6050.5600.000	OPERATING SUPPLIES	0.00	0.00	180.24	500.00	0.00	-500.00	-100.00%
	Total Function: 6050 - City Hall & Gen Buildings:	**0.00**	**0.00**	**180.24**	**500.00**	**0.00**	**-500.00**	**-100.00%**

Budget Comparison Report

Account Number		2021-2022 Total Activity	2022-2023 Total Budget	2022-2023 YTD Activity Through Feb	Parent Budget 2022-2023 FY2023 Amend	Comparison 1 Budget 2023-2024 FY2024 Dept Request	Comparison 1 to Parent Budget Increase / (Decrease)	%
Function: 8015 - Sewer & Sewage Disposal								
148.8015.5600.000	OPERATING SUPPLIES	25.68	0.00	0.00	0.00	0.00	0.00	0.00%
Total Function: 8015 - Sewer & Sewage Disposal:		**25.68**	**0.00**	**0.00**	**0.00**	**0.00**	**0.00**	**0.00%**
Total Fund: 148 - FEMA-COVID19:		**11,354.94**	**0.00**	**4,366.73**	**5,500.00**	**0.00**	**-5,500.00**	**-100.00%**
Fund: 149 - FEMA - WINDS								
Function: 1075 - Code Enforcement								
149.1075.5010.010	REGULAR-NON UNION	173.00	0.00	0.00	0.00	0.00	0.00	0.00%
149.1075.5101.010	SOCIAL SECURITY-NON UNION	10.37	0.00	0.00	0.00	0.00	0.00	0.00%
149.1075.5102.010	MEDICARE-NON UNION	2.43	0.00	0.00	0.00	0.00	0.00	0.00%
149.1075.5111.010	IPERS-NON UNION	16.33	0.00	0.00	0.00	0.00	0.00	0.00%
149.1075.5121.010	GRP INSUR-NON UNION	21.02	0.00	0.00	0.00	0.00	0.00	0.00%
149.1075.5123.010	WORKCOMP-NON UNION	0.15	0.00	0.00	0.00	0.00	0.00	0.00%
Total Function: 1075 - Code Enforcement:		**223.30**	**0.00**	**0.00**	**0.00**	**0.00**	**0.00**	**0.00%**
Function: 2010 - Roads, Bridges, Sidewalks								
149.2010.5342.000	CONTRACT-OUTSIDE HELP	340,989.50	0.00	0.00	0.00	0.00	0.00	0.00%
Total Function: 2010 - Roads, Bridges, Sidewalks:		**340,989.50**	**0.00**	**0.00**	**0.00**	**0.00**	**0.00**	**0.00%**
Function: 2060 - Highway Engineering								
149.2060.5010.010	REGULAR-NON UNION	121.18	0.00	0.00	0.00	0.00	0.00	0.00%
149.2060.5101.010	SOCIAL SECURITY-NON UNION	6.93	0.00	0.00	0.00	0.00	0.00	0.00%
149.2060.5102.010	MEDICARE-NON UNION	1.62	0.00	0.00	0.00	0.00	0.00	0.00%
149.2060.5111.010	IPERS-NON UNION	11.44	0.00	0.00	0.00	0.00	0.00	0.00%
149.2060.5121.010	GRP INSUR-NON UNION	13.85	0.00	0.00	0.00	0.00	0.00	0.00%
149.2060.5123.010	WORKCOMP-NON UNION	1.33	0.00	0.00	0.00	0.00	0.00	0.00%
Total Function: 2060 - Highway Engineering:		**156.35**	**0.00**	**0.00**	**0.00**	**0.00**	**0.00**	**0.00%**
Function: 2900 - Other Public Works								
149.2900.5331.600	PAYMENTS-OTHER ENTITIES-M	5,333.58	0.00	88,717.07	98,575.00	0.00	-98,575.00	-100.00%
Total Function: 2900 - Other Public Works:		**5,333.58**	**0.00**	**88,717.07**	**98,575.00**	**0.00**	**-98,575.00**	**-100.00%**
Function: 4030 - Parks								
149.4030.5010.010	REGULAR-NON UNION	64.06	0.00	0.00	0.00	0.00	0.00	0.00%
149.4030.5101.010	SOCIAL SECURITY-NON UNION	3.87	0.00	0.00	0.00	0.00	0.00	0.00%
149.4030.5102.010	MEDICARE-NON UNION	0.91	0.00	0.00	0.00	0.00	0.00	0.00%
149.4030.5111.010	IPERS-NON UNION	6.05	0.00	0.00	0.00	0.00	0.00	0.00%
149.4030.5121.010	GRP INSUR-NON UNION	9.54	0.00	0.00	0.00	0.00	0.00	0.00%
149.4030.5123.010	WORKCOMP-NON UNION	0.06	0.00	0.00	0.00	0.00	0.00	0.00%
149.4030.5342.000	CONTRACT-OUTSIDE HELP	8,556.99	0.00	0.00	0.00	0.00	0.00	0.00%
Total Function: 4030 - Parks:		**8,641.48**	**0.00**	**0.00**	**0.00**	**0.00**	**0.00**	**0.00%**

Budget Comparison Report

Account Number		2021-2022 Total Activity	2022-2023 Total Budget	2022-2023 YTD Activity Through Feb	Parent Budget 2022-2023 FY2023 Amend	Comparison 1 Budget 2023-2024 FY2024 Dept Request	Comparison 1 to Parent Budget Increase / (Decrease)	%
Function: 4040 - Recreation								
149.4040.5010.010	REGULAR-NON UNION	179.38	0.00	0.00	0.00	0.00	0.00	0.00%
149.4040.5101.010	SOCIAL SECURITY-NON UNION	10.83	0.00	0.00	0.00	0.00	0.00	0.00%
149.4040.5102.010	MEDICARE-NON UNION	2.53	0.00	0.00	0.00	0.00	0.00	0.00%
149.4040.5111.010	IPERS-NON UNION	16.93	0.00	0.00	0.00	0.00	0.00	0.00%
149.4040.5121.010	GRP INSUR-NON UNION	26.70	0.00	0.00	0.00	0.00	0.00	0.00%
149.4040.5123.010	WORKCOMP-NON UNION	0.16	0.00	0.00	0.00	0.00	0.00	0.00%
	Total Function: 4040 - Recreation:	**236.53**	**0.00**	**0.00**	**0.00**	**0.00**	**0.00**	**0.00%**
Function: 5010 - Community Beautification								
149.5010.5010.010	REGULAR-NON UNION	12.81	0.00	0.00	0.00	0.00	0.00	0.00%
149.5010.5101.010	SOCIAL SECURITY-NON UNION	0.77	0.00	0.00	0.00	0.00	0.00	0.00%
149.5010.5102.010	MEDICARE-NON UNION	0.18	0.00	0.00	0.00	0.00	0.00	0.00%
149.5010.5111.010	IPERS-NON UNION	1.21	0.00	0.00	0.00	0.00	0.00	0.00%
149.5010.5121.010	GRP INSUR-NON UNION	1.90	0.00	0.00	0.00	0.00	0.00	0.00%
149.5010.5123.010	WORKCOMP-NON UNION	0.01	0.00	0.00	0.00	0.00	0.00	0.00%
	Total Function: 5010 - Community Beautification:	**16.88**	**0.00**	**0.00**	**0.00**	**0.00**	**0.00**	**0.00%**
Function: 5030 - Housing & Urban Renewal								
149.5030.5010.010	REGULAR-NON UNION	0.00	0.00	808.38	2,000.00	2,000.00	0.00	0.00%
149.5030.5101.010	SOCIAL SECURITY-NON UNION	0.00	0.00	48.23	124.00	124.00	0.00	0.00%
149.5030.5102.010	MEDICARE-NON UNION	0.00	0.00	11.29	29.00	29.00	0.00	0.00%
149.5030.5111.010	IPERS-NON UNION	0.00	0.00	76.31	189.00	189.00	0.00	0.00%
149.5030.5121.010	GRP INSUR-NON UNION	0.00	0.00	114.84	0.00	0.00	0.00	0.00%
149.5030.5123.010	WORKCOMP-NON UNION	0.00	0.00	1.32	3.00	3.00	0.00	0.00%
	Total Function: 5030 - Housing & Urban Renewal:	**0.00**	**0.00**	**1,060.37**	**2,345.00**	**2,345.00**	**0.00**	**0.00%**
Function: 5040 - Planning & Zoning								
149.5040.5010.010	REGULAR-NON UNION	0.00	0.00	116.20	0.00	0.00	0.00	0.00%
149.5040.5101.010	SOCIAL SECURITY-NON UNION	0.00	0.00	7.20	0.00	0.00	0.00	0.00%
149.5040.5102.010	MEDICARE-NON UNION	0.00	0.00	1.69	0.00	0.00	0.00	0.00%
149.5040.5111.010	IPERS-NON UNION	0.00	0.00	10.97	0.00	0.00	0.00	0.00%
149.5040.5123.010	WORKCOMP-NON UNION	0.00	0.00	2.28	0.00	0.00	0.00	0.00%
	Total Function: 5040 - Planning & Zoning:	**0.00**	**0.00**	**138.34**	**0.00**	**0.00**	**0.00**	**0.00%**
Function: 6012 - City Administrator/Manager								
149.6012.5010.010	REGULAR-NON UNION	4,725.27	0.00	1,850.90	3,000.00	3,000.00	0.00	0.00%
149.6012.5101.010	SOCIAL SECURITY-NON UNION	278.97	0.00	113.45	186.00	186.00	0.00	0.00%
149.6012.5102.010	MEDICARE-NON UNION	67.87	0.00	26.54	44.00	44.00	0.00	0.00%
149.6012.5111.010	IPERS-NON UNION	436.67	0.00	172.73	283.00	283.00	0.00	0.00%
149.6012.5121.010	GRP INSUR-NON UNION	167.06	0.00	69.67	0.00	0.00	0.00	0.00%

Budget Comparison Report

Account Number		2021-2022 Total Activity	2022-2023 Total Budget	2022-2023 YTD Activity Through Feb	Parent Budget 2022-2023 FY2023 Amend	Comparison 1 Budget 2023-2024 FY2024 Dept Request	Comparison 1 to Parent Budget Increase / (Decrease)	%
149.6012.5123.010	WORKCOMP-NON UNION	4.20	0.00	3.03	5.00	5.00	0.00	0.00%
Total Function: 6012 - City Administrator/Manager:		**5,680.04**	**0.00**	**2,236.32**	**3,518.00**	**3,518.00**	**0.00**	**0.00%**
Function: 6021 - Finance								
149.6021.5010.010	REGULAR-NON UNION	58.15	0.00	374.25	2,000.00	2,000.00	0.00	0.00%
149.6021.5101.010	SOCIAL SECURITY-NON UNION	3.44	0.00	22.12	124.00	124.00	0.00	0.00%
149.6021.5102.010	MEDICARE-NON UNION	0.80	0.00	5.17	29.00	29.00	0.00	0.00%
149.6021.5111.010	IPERS-NON UNION	5.49	0.00	35.33	189.00	189.00	0.00	0.00%
149.6021.5121.010	GRP INSUR-NON UNION	6.92	0.00	48.11	0.00	0.00	0.00	0.00%
149.6021.5123.010	WORKCOMP-NON UNION	0.05	0.00	0.62	3.00	3.00	0.00	0.00%
Total Function: 6021 - Finance:		**74.85**	**0.00**	**485.60**	**2,345.00**	**2,345.00**	**0.00**	**0.00%**
Function: 8015 - Sewer & Sewage Disposal								
149.8015.5010.010	REGULAR-NON UNION	342.04	0.00	0.00	0.00	0.00	0.00	0.00%
149.8015.5101.010	SOCIAL SECURITY-NON UNION	21.01	0.00	0.00	0.00	0.00	0.00	0.00%
149.8015.5102.010	MEDICARE-NON UNION	4.91	0.00	0.00	0.00	0.00	0.00	0.00%
149.8015.5111.010	IPERS-NON UNION	31.60	0.00	0.00	0.00	0.00	0.00	0.00%
149.8015.5121.010	GRP INSUR-NON UNION	12.51	0.00	0.00	0.00	0.00	0.00	0.00%
149.8015.5123.010	WORKCOMP-NON UNION	0.31	0.00	0.00	0.00	0.00	0.00	0.00%
Total Function: 8015 - Sewer & Sewage Disposal:		**412.38**	**0.00**	**0.00**	**0.00**	**0.00**	**0.00**	**0.00%**
Function: 8065 - Storm Water								
149.8065.5010.010	REGULAR-NON UNION	56.56	0.00	0.00	0.00	0.00	0.00	0.00%
149.8065.5101.010	SOCIAL SECURITY-NON UNION	3.47	0.00	0.00	0.00	0.00	0.00	0.00%
149.8065.5102.010	MEDICARE-NON UNION	0.80	0.00	0.00	0.00	0.00	0.00	0.00%
149.8065.5111.010	IPERS-NON UNION	5.23	0.00	0.00	0.00	0.00	0.00	0.00%
149.8065.5121.010	GRP INSUR-NON UNION	2.01	0.00	0.00	0.00	0.00	0.00	0.00%
149.8065.5123.010	WORKCOMP-NON UNION	0.05	0.00	0.00	0.00	0.00	0.00	0.00%
Total Function: 8065 - Storm Water:		**68.12**	**0.00**	**0.00**	**0.00**	**0.00**	**0.00**	**0.00%**
Function: 9000 - 9000								
149.9000.7500.130	TRANSFER OUT - FUND 130	0.00	0.00	614.96	615.00	0.00	-615.00	-100.00%
Total Function: 9000 - 9000:		**0.00**	**0.00**	**614.96**	**615.00**	**0.00**	**-615.00**	**-100.00%**
Total Fund: 149 - FEMA - WINDS:		**361,833.01**	**0.00**	**93,252.66**	**107,398.00**	**8,208.00**	**-99,190.00**	**-92.36%**
Fund: 150 - LOCAL PD GRANTS								
Function: 1010 - Police Operations/Crime Prevention								
150.1010.5010.020	REGULAR-POLICE UNION	45,255.44	37,838.00	37,606.01	34,125.00	60,000.00	25,875.00	75.82%
150.1010.5020.020	OVERTIME-POLICE UNION	0.00	0.00	188.34	0.00	0.00	0.00	0.00%
150.1010.5102.020	MEDICARE-POLICE UNION	-35.08	549.00	181.91	495.00	0.00	-495.00	-100.00%
150.1010.5113.020	RETIREMENT-POLICE UNION	-601.43	9,043.00	2,702.78	8,156.00	0.00	-8,156.00	-100.00%
150.1010.5121.020	GRP INSUR-POLICE UNION	-548.49	7,688.00	2,817.60	8,084.00	0.00	-8,084.00	-100.00%

Budget Comparison Report

Account Number		2021-2022 Total Activity	2022-2023 Total Budget	2022-2023 YTD Activity Through Feb	Parent Budget 2022-2023 FY2023 Amend	Comparison 1 Budget 2023-2024 FY2024 Dept Request	Comparison 1 to Parent Budget Increase / (Decrease)	%
150.1010.5123.020	WORKCOMP-POLICE UNION	-35.23	530.00	185.51	478.00	0.00	-478.00	-100.00%
150.1010.5703.000	MINOR COMPUTER	0.00	67.00	0.00	67.00	0.00	-67.00	-100.00%
Total Function: 1010 - Police Operations/Crime Prevention:		**44,035.21**	**55,715.00**	**43,682.15**	**51,405.00**	**60,000.00**	**8,595.00**	**16.72%**
Total Fund: 150 - LOCAL PD GRANTS:		**44,035.21**	**55,715.00**	**43,682.15**	**51,405.00**	**60,000.00**	**8,595.00**	**16.72%**
Fund: 151 - DEPT OF JUSTICE GRANTS								
Function: 1010 - Police Operations/Crime Prevention								
151.1010.5230.000	CONSULTING & PROF FEES	39,902.65	105,000.00	52,516.48	103,000.00	36,000.00	-67,000.00	-65.05%
151.1010.5331.000	PAYMENTS-OTHER ENTITIES	8,013.50	8,120.00	8,120.00	8,120.00	8,120.00	0.00	0.00%
151.1010.5600.000	OPERATING SUPPLIES	0.00	0.00	0.00	0.00	0.00	0.00	0.00%
151.1010.5718.000	MINOR EQUIP, UNCLASSFIED	6,841.50	10,400.00	15,763.95	15,010.00	12,680.00	-2,330.00	-15.52%
Total Function: 1010 - Police Operations/Crime Prevention:		**54,757.65**	**123,520.00**	**76,400.43**	**126,130.00**	**56,800.00**	**-69,330.00**	**-54.97%**
Total Fund: 151 - DEPT OF JUSTICE GRANTS:		**54,757.65**	**123,520.00**	**76,400.43**	**126,130.00**	**56,800.00**	**-69,330.00**	**-54.97%**
Fund: 152 - POLICE UNDESIGNATED GRANTS								
Function: 1010 - Police Operations/Crime Prevention								
152.1010.5010.020	REGULAR-POLICE UNION	66,596.92	69,007.00	52,378.85	69,007.00	69,007.00	0.00	0.00%
152.1010.5021.010	EXTRA DUTY-NON UNION	96.00	3,000.00	204.00	3,000.00	3,000.00	0.00	0.00%
152.1010.5021.020	EXTRA DUTY-POLICE UNION	3,645.16	13,000.00	4,330.86	13,000.00	13,000.00	0.00	0.00%
152.1010.5102.020	MEDICARE-POLICE UNION	0.00	0.00	156.03	0.00	0.00	0.00	0.00%
152.1010.5113.020	RETIREMENT-POLICE UNION	0.00	0.00	2,263.84	0.00	0.00	0.00	0.00%
152.1010.5121.020	GRP INSUR-POLICE UNION	56.02	0.00	1,047.27	0.00	0.00	0.00	0.00%
152.1010.5123.020	WORKCOMP-POLICE UNION	0.00	0.00	153.38	0.00	0.00	0.00	0.00%
152.1010.5230.000	CONSULTING & PROF FEES	32,871.12	20,000.00	8,262.54	8,263.00	20,000.00	11,737.00	142.04%
152.1010.5280.000	DUES, MEMBER, SUBSCRIPTN	192.00	0.00	128.00	250.00	0.00	-250.00	-100.00%
152.1010.5342.000	CONTRACT-OUTSIDE HELP	1,535.50	0.00	0.00	6,979.00	0.00	-6,979.00	-100.00%
152.1010.5465.000	TRAVEL - HOTEL/MOTEL	0.00	0.00	0.00	370.00	0.00	-370.00	-100.00%
152.1010.5600.000	OPERATING SUPPLIES	955.86	0.00	0.00	0.00	0.00	0.00	0.00%
152.1010.5718.000	MINOR EQUIP, UNCLASSFIED	4,245.00	4,500.00	0.00	5,460.00	4,500.00	-960.00	-17.58%
152.1010.5750.000	OTHER CAP EQUIP > $5,000	8,937.50	0.00	0.00	0.00	0.00	0.00	0.00%
Total Function: 1010 - Police Operations/Crime Prevention:		**119,131.08**	**109,507.00**	**68,924.77**	**106,329.00**	**109,507.00**	**3,178.00**	**2.99%**
Function: 9000 - 9000								
152.9000.7500.001	TRANSFER OUT - FUND 001	20.00	0.00	0.00	0.00	0.00	0.00	0.00%
152.9000.7500.153	TRANSFER OUT - FUND 153	2,694.00	0.00	0.00	0.00	0.00	0.00	0.00%
Total Function: 9000 - 9000:		**2,714.00**	**0.00**	**0.00**	**0.00**	**0.00**	**0.00**	**0.00%**
Total Fund: 152 - POLICE UNDESIGNATED GRANTS:		**121,845.08**	**109,507.00**	**68,924.77**	**106,329.00**	**109,507.00**	**3,178.00**	**2.99%**
Fund: 153 - POLICE DEPT DONATION FUND								
Function: 1010 - Police Operations/Crime Prevention								
153.1010.5215.000	BANK CHARGES	0.00	0.00	4.00	10.00	0.00	-10.00	-100.00%

Budget Comparison Report

Account Number		2021-2022 Total Activity	2022-2023 Total Budget	2022-2023 YTD Activity Through Feb	Parent Budget 2022-2023 FY2023 Amend	Comparison 1 Budget 2023-2024 FY2024 Dept Request	Comparison 1 to Parent Budget Increase / (Decrease)	%
153.1010.5230.000	CONSULTING & PROF FEES	88.50	0.00	320.00	320.00	400.00	80.00	25.00%
153.1010.5280.000	DUES, MEMBER, SUBSCRIPTN	190.00	200.00	168.00	200.00	200.00	0.00	0.00%
153.1010.5321.000	K9 EXPENSES	17,464.02	0.00	1,144.01	1,500.00	2,000.00	500.00	33.33%
153.1010.5370.000	PRINTING & BINDING	225.00	0.00	0.00	0.00	0.00	0.00	0.00%
153.1010.5460.000	CONFERENCE EXPENSE	644.00	20,000.00	180.00	20,000.00	20,000.00	0.00	0.00%
153.1010.5464.000	TRAVEL - PER DIEM	891.05	250.00	21.12	250.00	250.00	0.00	0.00%
153.1010.5465.000	TRAVEL - HOTEL/MOTEL	5,779.20	1,500.00	369.60	1,500.00	1,500.00	0.00	0.00%
153.1010.5570.000	VEHICLE GAS	2,293.27	500.00	53.15	500.00	500.00	0.00	0.00%
153.1010.5600.000	OPERATING SUPPLIES	4,164.08	2,500.00	2,829.13	5,000.00	2,500.00	-2,500.00	-50.00%
153.1010.5601.000	PROMOTION/PROGRAM SPPL\	864.19	2,500.00	0.00	2,500.00	2,500.00	0.00	0.00%
153.1010.5718.000	MINOR EQUIP, UNCLASSFIED	0.00	1,000.00	0.00	1,000.00	1,000.00	0.00	0.00%
Total Function: 1010 - Police Operations/Crime Prevention:		**32,603.31**	**28,450.00**	**5,089.01**	**32,780.00**	**30,850.00**	**-1,930.00**	**-5.89%**
Total Fund: 153 - POLICE DEPT DONATION FUND:		**32,603.31**	**28,450.00**	**5,089.01**	**32,780.00**	**30,850.00**	**-1,930.00**	**-5.89%**
Fund: 156 - FIRE DEPT DONATION FUND								
Function: 1050 - Fire Department								
156.1050.5410.000	REPAIRS & MAINTENANCE	0.00	7,000.00	0.00	7,000.00	7,000.00	0.00	0.00%
156.1050.5413.000	VEHICLE REPAIRS & MAINTEN/	2,545.00	0.00	673.00	2,000.00	0.00	-2,000.00	-100.00%
156.1050.5565.000	VEHICLE OPER/MAINT SPPLY	3,941.26	0.00	0.00	0.00	0.00	0.00	0.00%
156.1050.5600.000	OPERATING SUPPLIES	9,113.93	0.00	123.71	500.00	0.00	-500.00	-100.00%
156.1050.5630.000	EMS SUPPLIES	0.00	0.00	4,040.52	0.00	0.00	0.00	0.00%
156.1050.5718.000	MINOR EQUIP, UNCLASSFIED	10,245.43	0.00	17,573.49	20,000.00	10,000.00	-10,000.00	-50.00%
Total Function: 1050 - Fire Department:		**25,845.62**	**7,000.00**	**22,410.72**	**29,500.00**	**17,000.00**	**-12,500.00**	**-42.37%**
Function: 9000 - 9000								
156.9000.7500.032	TRANSFER OUT - CIP LARGE EC	15,000.00	0.00	0.00	0.00	0.00	0.00	0.00%
Total Function: 9000 - 9000:		**15,000.00**	**0.00**	**0.00**	**0.00**	**0.00**	**0.00**	**0.00%**
Total Fund: 156 - FIRE DEPT DONATION FUND:		**40,845.62**	**7,000.00**	**22,410.72**	**29,500.00**	**17,000.00**	**-12,500.00**	**-42.37%**
Fund: 157 - FIRE DEPT GRANTS								
Function: 9000 - 9000								
157.9000.7500.156	TRANSFER OUT - FUND 156	467.19	0.00	0.00	0.00	0.00	0.00	0.00%
157.9000.7500.300	TRANSFER OUT - FUIND 300	4,500.00	0.00	0.00	0.00	0.00	0.00	0.00%
Total Function: 9000 - 9000:		**4,967.19**	**0.00**	**0.00**	**0.00**	**0.00**	**0.00**	**0.00%**
Total Fund: 157 - FIRE DEPT GRANTS:		**4,967.19**	**0.00**	**0.00**	**0.00**	**0.00**	**0.00**	**0.00%**
Fund: 170 - LIBRARY DONATION FUND								
Function: 4010 - Library Services								
170.4010.5230.000	CONSULTING & PROF FEES	3,275.00	0.00	3,275.00	0.00	0.00	0.00	0.00%
170.4010.5370.000	PRINTING & BINDING	0.00	0.00	135.00	200.00	0.00	-200.00	-100.00%
170.4010.5450.000	TELEPHONE/OTHER COMMNC	0.00	0.00	1,912.80	2,000.00	0.00	-2,000.00	-100.00%

Budget Comparison Report

Account Number		2021-2022 Total Activity	2022-2023 Total Budget	2022-2023 YTD Activity Through Feb	Parent Budget 2022-2023 FY2023 Amend	Comparison 1 Budget 2023-2024 FY2024 Dept Request	Comparison 1 to Parent Budget Increase / (Decrease)	%
170.4010.5600.000	OPERATING SUPPLIES	0.00	1,500.00	0.00	1,500.00	1,500.00	0.00	0.00%
170.4010.5601.000	PROMOTION/PROGRAM SPPL'	5,182.39	10,000.00	3,677.86	10,000.00	10,000.00	0.00	0.00%
170.4010.5612.000	COMPUTER COMPONENTS	0.00	1,100.00	0.00	1,100.00	1,100.00	0.00	0.00%
170.4010.5718.000	MINOR EQUIP, UNCLASSFIED	0.00	90.00	0.00	90.00	90.00	0.00	0.00%
170.4010.5731.000	LIBRARY PERIODICALS	0.00	50.00	0.00	50.00	50.00	0.00	0.00%
170.4010.5732.000	LIBRARY BOOKS, FILM RCRD	8,048.73	20,000.00	5,032.11	20,000.00	20,000.00	0.00	0.00%
170.4010.5734.000	MEMORIAL BOOKS	2,621.80	2,000.00	835.43	2,000.00	2,000.00	0.00	0.00%
170.4010.5736.000	LIBRARY DATABASES	460.55	0.00	0.00	0.00	0.00	0.00	0.00%
170.4010.5750.000	OTHER CAP EQUIP > $5,000	0.00	40,747.00	0.00	40,747.00	0.00	-40,747.00	-100.00%
170.4010.5776.000	BUILDINGS & IMPROVEMENTS	0.00	75,000.00	0.00	100,000.00	800,000.00	700,000.00	700.00%
170.4010.5980.000	REFUNDS/REIMB	250.00	0.00	0.00	0.00	0.00	0.00	0.00%
	Total Function: 4010 - Library Services:	**19,838.47**	**150,487.00**	**14,868.20**	**177,687.00**	**834,740.00**	**657,053.00**	**369.78%**
	Total Fund: 170 - LIBRARY DONATION FUND:	**19,838.47**	**150,487.00**	**14,868.20**	**177,687.00**	**834,740.00**	**657,053.00**	**369.78%**
Fund: 177 - SEIZED ASSETS (POLICE)								
Function: 1010 - Police Operations/Crime Prevention								
177.1010.5331.000	PAYMENTS-OTHER ENTITIES	1,061.00	1,000.00	220.00	1,000.00	1,000.00	0.00	0.00%
177.1010.5471.000	TRAINING	5,000.00	0.00	0.00	0.00	0.00	0.00	0.00%
177.1010.5600.000	OPERATING SUPPLIES	5,267.93	0.00	0.00	0.00	0.00	0.00	0.00%
177.1010.5704.000	MINOR SOFTWARE	4,200.00	0.00	0.00	0.00	0.00	0.00	0.00%
177.1010.5718.000	MINOR EQUIP, UNCLASSFIED	2,076.00	3,000.00	2,082.59	3,000.00	3,000.00	0.00	0.00%
	Total Function: 1010 - Police Operations/Crime Prevention:	**17,604.93**	**4,000.00**	**2,302.59**	**4,000.00**	**4,000.00**	**0.00**	**0.00%**
	Total Fund: 177 - SEIZED ASSETS (POLICE):	**17,604.93**	**4,000.00**	**2,302.59**	**4,000.00**	**4,000.00**	**0.00**	**0.00%**
Fund: 179 - OTHER COMM AND ECON DEVELOPMENT								
Function: 9000 - 9000								
179.9000.7500.189	TRANSFER OUT - LEAD GRANT	79,839.36	0.00	0.00	0.00	0.00	0.00	0.00%
	Total Function: 9000 - 9000:	**79,839.36**	**0.00**	**0.00**	**0.00**	**0.00**	**0.00**	**0.00%**
	Total Fund: 179 - OTHER COMM AND ECON DEVELOPMENT:	**79,839.36**	**0.00**	**0.00**	**0.00**	**0.00**	**0.00**	**0.00%**
Fund: 180 - HOUSING GRANTS								
Function: 9000 - 9000								
180.9000.7500.189	TRANSFER OUT - LEAD #6	28,073.24	0.00	0.00	0.00	0.00	0.00	0.00%
	Total Function: 9000 - 9000:	**28,073.24**	**0.00**	**0.00**	**0.00**	**0.00**	**0.00**	**0.00%**
	Total Fund: 180 - HOUSING GRANTS:	**28,073.24**	**0.00**	**0.00**	**0.00**	**0.00**	**0.00**	**0.00%**
Fund: 184 - VOUCHERS - 002, 003								
Function: 5030 - Housing & Urban Renewal								
184.5030.5010.010	REGULAR-NON UNION	106,666.70	100,354.00	81,787.30	119,889.00	134,678.00	14,789.00	12.34%
184.5030.5061.010	RHSA PAYOUTS-NON UNION	0.00	0.00	1,946.07	0.00	16,000.00	16,000.00	0.00%
184.5030.5101.010	SOCIAL SECURITY-NON UNION	6,429.12	6,222.00	4,919.54	7,433.00	8,350.00	917.00	12.34%

Budget Comparison Report

Account Number		2021-2022 Total Activity	2022-2023 Total Budget	2022-2023 YTD Activity Through Feb	Parent Budget 2022-2023 FY2023 Amend	Comparison 1 Budget 2023-2024 FY2024 Dept Request	Comparison 1 to Parent Budget Increase / (Decrease)	%
184.5030.5102.010	MEDICARE-NON UNION	1,503.36	1,455.00	1,150.72	1,738.00	1,953.00	215.00	12.37%
184.5030.5111.010	IPERS-NON UNION	10,069.45	9,473.00	7,663.11	11,317.00	12,714.00	1,397.00	12.34%
184.5030.5121.010	GRP INSUR-NON UNION	12,628.91	13,740.00	10,721.25	17,315.00	20,972.00	3,657.00	21.12%
184.5030.5123.010	WORKCOMP-NON UNION	247.20	164.00	458.60	196.00	702.00	506.00	258.16%
184.5030.5210.000	ADVERTISING & LEGAL PUB	20.93	200.00	0.00	200.00	50.00	-150.00	-75.00%
184.5030.5231.000	ACCOUNTING FEES	10,032.00	12,171.00	8,114.00	12,171.00	12,734.00	563.00	4.63%
184.5030.5232.000	AUDITING FEES	4,700.00	2,610.00	1,305.00	2,615.00	2,658.00	43.00	1.64%
184.5030.5238.000	PROJECT ADMIN-PHA	427.68	1,000.00	172.72	1,000.00	500.00	-500.00	-50.00%
184.5030.5242.000	SEC 8 PYMTS-OCCUPIED	1,046,365.00	1,035,000.00	699,224.00	1,035,000.00	1,035,000.00	0.00	0.00%
184.5030.5246.000	SEC 8-TENANT UTILITY REIMB	4,652.00	8,000.00	2,497.00	4,000.00	4,000.00	0.00	0.00%
184.5030.5251.000	LICENSE & PERMITS	0.00	120.00	0.00	120.00	120.00	0.00	0.00%
184.5030.5280.000	DUES, MEMBER, SUBSCRIPTN	1,474.44	1,500.00	1,483.72	1,500.00	1,500.00	0.00	0.00%
184.5030.5300.000	INSURANCE - TORT LIAB	774.24	997.00	0.00	789.00	947.00	158.00	20.03%
184.5030.5342.000	CONTRACT-OUTSIDE HELP	511.89	1,000.00	1,110.01	1,800.00	2,000.00	200.00	11.11%
184.5030.5344.000	CONTRACT-MAINTENANCE	3,193.60	4,000.00	2,530.90	4,000.00	4,000.00	0.00	0.00%
184.5030.5347.000	CONTRACT-SOFTWARE MAINT	14,708.73	15,000.00	525.00	15,000.00	15,000.00	0.00	0.00%
184.5030.5360.000	POSTAGE & SHIPPING	3,600.53	4,000.00	2,551.15	4,000.00	4,000.00	0.00	0.00%
184.5030.5430.000	INTERPRETING	0.00	250.00	0.00	250.00	250.00	0.00	0.00%
184.5030.5450.000	TELEPHONE/OTHR COMMNCT	1,596.52	1,600.00	1,066.32	1,600.00	1,600.00	0.00	0.00%
184.5030.5460.000	CONFERENCE EXPENSE	734.75	700.00	1,075.00	1,500.00	700.00	-800.00	-53.33%
184.5030.5472.000	MILEAGE REIMBURSE	0.00	400.00	0.00	400.00	400.00	0.00	0.00%
184.5030.5600.000	OPERATING SUPPLIES	-1,581.21	100.00	-831.83	100.00	100.00	0.00	0.00%
184.5030.5605.000	OFFICE SUPPLIES	754.26	1,000.00	250.55	1,000.00	1,000.00	0.00	0.00%
184.5030.5612.000	COMPUTER COMPONENTS	0.00	200.00	0.00	200.00	200.00	0.00	0.00%
184.5030.5702.000	MINOR OFFICE FURN/EQUIP	0.00	0.00	376.65	400.00	0.00	-400.00	-100.00%
184.5030.5703.000	MINOR COMPUTER	0.00	1,000.00	0.00	1,000.00	1,000.00	0.00	0.00%
184.5030.5704.000	MINOR SOFTWARE <$5,000	0.00	500.00	0.00	500.00	500.00	0.00	0.00%
184.5030.5718.000	MINOR EQUIP, UNCLASSFIED	0.00	500.00	0.00	500.00	500.00	0.00	0.00%
184.5030.5750.000	OTHER CAP EQUIP > $5,000	0.00	0.00	1,685.00	0.00	0.00	0.00	0.00%
184.5030.5980.000	REFUNDS/REIMB	14.00	0.00	0.00	0.00	0.00	0.00	0.00%
Total Function: 5030 - Housing & Urban Renewal:		**1,229,524.10**	**1,223,256.00**	**831,781.78**	**1,247,533.00**	**1,284,128.00**	**36,595.00**	**2.93%**
Total Fund: 184 - VOUCHERS - 002, 003:		**1,229,524.10**	**1,223,256.00**	**831,781.78**	**1,247,533.00**	**1,284,128.00**	**36,595.00**	**2.93%**
Fund: 189 - #6 HUD LEAD GRANT								
Function: 3040 - Health Regulation & Inspections								
189.3040.5010.010	REGULAR-NON UNION	137,100.03	157,177.00	82,450.61	124,053.00	125,393.00	1,340.00	1.08%
189.3040.5101.010	SOCIAL SECURITY-NON UNION	8,171.49	9,745.00	4,800.76	7,691.00	7,774.00	83.00	1.08%
189.3040.5102.010	MEDICARE-NON UNION	1,910.98	2,279.00	1,122.70	1,799.00	1,818.00	19.00	1.06%
189.3040.5111.010	IPERS-NON UNION	12,942.54	14,837.00	7,783.25	11,711.00	11,837.00	126.00	1.08%
189.3040.5121.010	GRP INSUR-NON UNION	16,813.81	18,913.00	17,729.22	11,156.00	27,438.00	16,282.00	145.95%

Budget Comparison Report

Account Number		2021-2022 Total Activity	2022-2023 Total Budget	2022-2023 YTD Activity Through Feb	Parent Budget 2022-2023 FY2023 Amend	Comparison 1 Budget 2023-2024 FY2024 Dept Request	Comparison 1 to Parent Budget Increase / (Decrease)	%
189.3040.5123.010	WORKCOMP-NON UNION	291.18	257.00	134.70	203.00	205.00	2.00	0.99%
189.3040.5231.000	ACCOUNTING FEES	15,600.00	15,600.00	10,400.00	15,600.00	15,600.00	0.00	0.00%
189.3040.5232.000	AUDITING FEES	1,177.50	1,310.00	1,305.00	1,305.00	1,358.00	53.00	4.06%
189.3040.5250.000	COURT, RECORD & FILING FEE	211.00	1,000.00	58.00	500.00	1,000.00	500.00	100.00%
189.3040.5251.000	LICENSE & PERMITS	1,270.00	700.00	0.00	700.00	700.00	0.00	0.00%
189.3040.5290.000	INSURANCE - GENERAL	3,131.00	5,600.00	3,105.75	3,106.00	3,727.00	621.00	19.99%
189.3040.5300.000	INSURANCE - TORT LIAB	1,888.74	1,306.00	0.00	2,606.00	3,127.00	521.00	19.99%
189.3040.5342.000	CONTRACT-OUTSIDE HELP	49,700.00	150,000.00	87,320.00	150,000.00	150,000.00	0.00	0.00%
189.3040.5347.000	CONTRACT-SOFTWARE MAINT	2,390.03	3,000.00	0.00	3,000.00	3,000.00	0.00	0.00%
189.3040.5360.000	POSTAGE & SHIPPING	110.00	1,500.00	300.00	1,500.00	1,500.00	0.00	0.00%
189.3040.5410.000	REPAIRS & MAINTENANCE	288,400.00	1,000,000.00	323,580.00	1,139,446.00	1,000,000.00	-139,446.00	-12.24%
189.3040.5415.000	HEALTH HOME REPAIRS	56,714.00	150,000.00	35,975.00	150,000.00	200,000.00	50,000.00	33.33%
189.3040.5430.000	SUSTENANCE/CARE PERSONS	0.00	10,000.00	0.00	10,000.00	10,000.00	0.00	0.00%
189.3040.5433.000	RELOCATION EXPENSES	8,300.00	50,000.00	6,342.00	25,000.00	10,685.00	-14,315.00	-57.26%
189.3040.5450.000	TELEPHONE/OTHR COMMNCT	383.86	1,000.00	257.12	500.00	400.00	-100.00	-20.00%
189.3040.5460.000	CONFERENCE EXPENSE	2,886.00	3,000.00	1,690.00	1,000.00	1,000.00	0.00	0.00%
189.3040.5461.000	TRAVEL-AIRFARE	0.00	1,000.00	0.00	1,000.00	1,000.00	0.00	0.00%
189.3040.5464.000	TRAVEL-PER DIEM	0.00	600.00	19.00	600.00	600.00	0.00	0.00%
189.3040.5465.000	TRAVEL - HOTEL/MOTEL	0.00	1,200.00	375.76	1,200.00	1,200.00	0.00	0.00%
189.3040.5472.000	MILEAGE REIMBURSE	0.00	200.00	0.00	200.00	200.00	0.00	0.00%
189.3040.5600.000	OPERATING SUPPLIES	626.08	1,200.00	602.27	5,000.00	1,200.00	-3,800.00	-76.00%
189.3040.5601.000	PROMOTION/PROGRAM SPPL	995.95	1,000.00	20.00	400.00	1,000.00	600.00	150.00%
189.3040.5604.000	DUST WIPE/CLRNC SMPLNG	0.00	200.00	0.00	200.00	200.00	0.00	0.00%
189.3040.5605.000	OFFICE SUPPLIES	557.81	2,000.00	34.98	1,000.00	500.00	-500.00	-50.00%
189.3040.5606.000	SOIL SAMPLING	0.00	200.00	0.00	200.00	200.00	0.00	0.00%
189.3040.5702.000	MINOR OFFICE FURN/EQUIP	0.00	0.00	176.88	180.00	0.00	-180.00	-100.00%
189.3040.5703.000	MINOR COMPUTER	0.00	500.00	0.00	500.00	500.00	0.00	0.00%
Total Function: 3040 - Health Regulation & Inspections:		**611,572.00**	**1,605,324.00**	**585,583.00**	**1,671,356.00**	**1,583,162.00**	**-88,194.00**	**-5.28%**
Total Fund: 189 - #6 HUD LEAD GRANT:		**611,572.00**	**1,605,324.00**	**585,583.00**	**1,671,356.00**	**1,583,162.00**	**-88,194.00**	**-5.28%**
Fund: 200 - GO BONDS DEBT FUND								
Function: 7010 - Debt Service								
200.7010.5810.000	PRINCIPAL REDEMPTION	4,384,243.00	4,755,000.00	0.00	4,755,000.00	5,510,000.00	755,000.00	15.88%
200.7010.5820.000	INTEREST PAYMENTS	897,400.00	1,085,502.00	585,103.62	1,085,502.00	1,514,713.00	429,211.00	39.54%
200.7010.5830.000	OTHER DEBT SERV EXP	5,900.00	6,000.00	4,200.00	6,000.00	6,700.00	700.00	11.67%
Total Function: 7010 - Debt Service:		**5,287,543.00**	**5,846,502.00**	**589,303.62**	**5,846,502.00**	**7,031,413.00**	**1,184,911.00**	**20.27%**
Total Fund: 200 - GO BONDS DEBT FUND:		**5,287,543.00**	**5,846,502.00**	**589,303.62**	**5,846,502.00**	**7,031,413.00**	**1,184,911.00**	**20.27%**

Budget Comparison Report

Account Number		2021-2022 Total Activity	2022-2023 Total Budget	2022-2023 YTD Activity Through Feb	Parent Budget 2022-2023 FY2023 Amend	Comparison 1 Budget 2023-2024 FY2024 Dept Request	Comparison 1 to Parent Budget Increase / (Decrease)	%
Fund: 300 - CIP COLLECTION FUND								
Function: 9000 - 9000								
300.9000.7500.030	TR TO CAP IMPR RESRV	437,598.68	796,599.00	319,252.34	890,689.00	696,423.00	-194,266.00	-21.81%
300.9000.7500.032	TR TO CIP LARGE EQUIP	40,485.52	0.00	0.00	93,755.00	94,086.00	331.00	0.35%
300.9000.7500.132	TRANSFER OUT - FUND 132	69,853.97	0.00	0.00	0.00	0.00	0.00	0.00%
	Total Function: 9000 - 9000:	**547,938.17**	**796,599.00**	**319,252.34**	**984,444.00**	**790,509.00**	**-193,935.00**	**-19.70%**
	Total Fund: 300 - CIP COLLECTION FUND:	**547,938.17**	**796,599.00**	**319,252.34**	**984,444.00**	**790,509.00**	**-193,935.00**	**-19.70%**
Fund: 310 - FEDERAL STREET GRANTS								
Function: 2012 - Street Construction								
310.2012.5233.000	ENGINEERING FEES	40,062.00	0.00	0.00	0.00	0.00	0.00	0.00%
	Total Function: 2012 - Street Construction:	**40,062.00**	**0.00**	**0.00**	**0.00**	**0.00**	**0.00**	**0.00%**
	Total Fund: 310 - FEDERAL STREET GRANTS:	**40,062.00**	**0.00**	**0.00**	**0.00**	**0.00**	**0.00**	**0.00%**
Fund: 311 - RISE STREET GRANTS								
Function: 2012 - Street Construction								
311.2012.5230.000	CONSULTING & PROF FEES	9,518.48	10,000.00	3,731.00	20,000.00	0.00	-20,000.00	-100.00%
311.2012.5233.000	ENGINEERING FEES	80,382.11	0.00	116,196.74	404,890.00	25,000.00	-379,890.00	-93.83%
311.2012.5342.000	CONTRACT-OUTSIDE HELP	11,517.00	4,401,311.00	3,903,030.51	6,050,000.00	0.00	-6,050,000.00	-100.00%
311.2012.5348.000	CONTRACT-OTHER	24,000.00	0.00	0.00	0.00	0.00	0.00	0.00%
311.2012.5782.000	R.O.W.-LAND-PERMANENT	123,419.16	0.00	0.00	0.00	0.00	0.00	0.00%
	Total Function: 2012 - Street Construction:	**248,836.75**	**4,411,311.00**	**4,022,958.25**	**6,474,890.00**	**25,000.00**	**-6,449,890.00**	**-99.61%**
	Total Fund: 311 - RISE STREET GRANTS:	**248,836.75**	**4,411,311.00**	**4,022,958.25**	**6,474,890.00**	**25,000.00**	**-6,449,890.00**	**-99.61%**
Fund: 312 - AIRPORT PROJECT FUND								
Function: 2080 - Airport								
312.2080.5233.000	ENGINEERING FEES	118,825.95	0.00	34,134.34	38,053.00	50,000.00	11,947.00	31.40%
312.2080.5234.000	LEGAL EXPENSES	0.00	0.00	396.00	3,000.00	0.00	-3,000.00	-100.00%
312.2080.5342.000	CONTRACT-OUTSIDE HELP	19,729.21	0.00	12,181.57	23,886.00	91,500.00	67,614.00	283.07%
312.2080.5348.000	CONTRACT-OTHER	2,310,403.90	0.00	308,791.10	480,024.00	0.00	-480,024.00	-100.00%
312.2080.5776.000	BUILDINGS & IMPROVEMENTS	1,122.81	0.00	2,667.87	50,000.00	0.00	-50,000.00	-100.00%
	Total Function: 2080 - Airport:	**2,450,081.87**	**0.00**	**358,170.88**	**594,963.00**	**141,500.00**	**-453,463.00**	**-76.22%**
	Total Fund: 312 - AIRPORT PROJECT FUND:	**2,450,081.87**	**0.00**	**358,170.88**	**594,963.00**	**141,500.00**	**-453,463.00**	**-76.22%**
Fund: 340 - BIKE PATH PROJECT FUND								
Function: 4030 - Parks								
340.4030.5233.000	ENGINEERING FEES	74,626.08	100,000.00	53,622.20	60,862.00	95,000.00	34,138.00	56.09%
340.4030.5342.000	CONTRACT-OUTSIDE HELP	0.00	500,000.00	0.00	0.00	1,540,000.00	1,540,000.00	0.00%

Budget Comparison Report

Account Number		2021-2022 Total Activity	2022-2023 Total Budget	2022-2023 YTD Activity Through Feb	Parent Budget 2022-2023 FY2023 Amend	Comparison 1 Budget 2023-2024 FY2024 Dept Request	Comparison 1 to Parent Budget Increase / (Decrease)	%
340.4030.5485.000	STORM WATER FEES	2,540.08	2,540.00	2,540.08	2,540.00	2,540.00	0.00	0.00%
	Total Function: 4030 - Parks:	**77,166.16**	**602,540.00**	**56,162.28**	**63,402.00**	**1,637,540.00**	**1,574,138.00**	**2,482.79%**
	Total Fund: 340 - BIKE PATH PROJECT FUND:	**77,166.16**	**602,540.00**	**56,162.28**	**63,402.00**	**1,637,540.00**	**1,574,138.00**	**2,482.79%**
Fund: 341 - TREES FOREVER PROJECT								
Function: 5010 - Community Beautification								
341.5010.5370.000	PRINTING & BINDING	72.00	0.00	0.00	0.00	0.00	0.00	0.00%
341.5010.5609.000	AGRICULTURAL SUPPLIES	19,994.22	20,000.00	34,645.00	40,000.00	40,000.00	0.00	0.00%
341.5010.5611.000	BLDG,GRD OPER/MAINT SPLY	905.17	0.00	0.00	0.00	0.00	0.00	0.00%
	Total Function: 5010 - Community Beautification:	**20,971.39**	**20,000.00**	**34,645.00**	**40,000.00**	**40,000.00**	**0.00**	**0.00%**
	Total Fund: 341 - TREES FOREVER PROJECT:	**20,971.39**	**20,000.00**	**34,645.00**	**40,000.00**	**40,000.00**	**0.00**	**0.00%**
Fund: 350 - GO BONDS CAPITAL PROJECTS								
Function: 2011 - Sidewalks								
350.2011.5342.000	CONTRACT-OUTSIDE HELP	0.00	0.00	0.00	0.00	0.00	0.00	0.00%
	Total Function: 2011 - Sidewalks:	**0.00**	**0.00**	**0.00**	**0.00**	**0.00**	**0.00**	**0.00%**
	Total Fund: 350 - GO BONDS CAPITAL PROJECTS:	**0.00**	**0.00**	**0.00**	**0.00**	**0.00**	**0.00**	**0.00%**
Fund: 354 - POLICE & FIRE STATIONS								
Function: 1099 - Police and Fire Building Exps								
354.1099.5234.000	LEGAL EXPENSES	22,091.91	0.00	0.00	0.00	0.00	0.00	0.00%
354.1099.5260.000	DAMAGES/TORT LIABILITY CLA	55,000.00	0.00	0.00	0.00	0.00	0.00	0.00%
354.1099.5342.000	CONTRACT-OUTSIDE HELP	5,650.00	0.00	741.00	741.00	0.00	-741.00	-100.00%
354.1099.5342.003	CONTRACT - MASONRY	0.00	0.00	0.00	0.00	0.00	0.00	0.00%
354.1099.5410.000	REPAIRS & MAINTENANCE	0.00	0.00	0.00	0.00	0.00	0.00	0.00%
	Total Function: 1099 - Police and Fire Building Exps:	**82,741.91**	**0.00**	**741.00**	**741.00**	**0.00**	**-741.00**	**-100.00%**
Function: 9000 - 9000								
354.9000.7500.363	TRANSFER OUT - FUND 354	452,827.50	0.00	0.00	0.00	0.00	0.00	0.00%
354.9000.7500.395	TRANSFER OUT - FUND 395	73,529.90	0.00	0.00	0.00	0.00	0.00	0.00%
	Total Function: 9000 - 9000:	**526,357.40**	**0.00**	**0.00**	**0.00**	**0.00**	**0.00**	**0.00%**
	Total Fund: 354 - POLICE & FIRE STATIONS:	**609,099.31**	**0.00**	**741.00**	**741.00**	**0.00**	**-741.00**	**-100.00%**
Fund: 355 - 2015 GO BONDS (D&D)								
Function: 1075 - Code Enforcement								
355.1075.5210.000	ADVERTISING & LEGAL PUB	346.08	500.00	0.00	500.00	500.00	0.00	0.00%
355.1075.5230.000	CONSULTING & PROF FEES	85,133.51	50,000.00	74,820.57	77,629.00	10,000.00	-67,629.00	-87.12%
355.1075.5233.000	ENGINEERING FEES	495.92	0.00	0.00	0.00	0.00	0.00	0.00%
355.1075.5234.000	LEGAL EXPENSES	31,472.61	25,000.00	12,413.71	25,000.00	20,000.00	-5,000.00	-20.00%
355.1075.5250.000	COURT, RECORD & FILING FEE	1,695.00	1,000.00	1,605.00	2,000.00	1,000.00	-1,000.00	-50.00%
355.1075.5264.000	RESIDENTIAL DEMO	573,503.98	625,000.00	404,521.15	620,000.00	200,000.00	-420,000.00	-67.74%

Account Number		2021-2022 Total Activity	2022-2023 Total Budget	2022-2023 YTD Activity Through Feb	Parent Budget 2022-2023 FY2023 Amend	Comparison 1 Budget 2023-2024 FY2024 Dept Request	Comparison 1 to Parent Budget Increase / (Decrease)	%
355.1075.5290.000	INSURANCE - GENERAL	1,226.00	0.00	114.00	1,471.00	1,765.00	294.00	19.99%
355.1075.5331.000	PAYMENTS-OTHER ENTITIES	155.00	100.00	1,041.00	100.00	100.00	0.00	0.00%
355.1075.5342.000	CONTRACT-OUTSIDE HELP	81,625.59	15,000.00	61,200.89	90,000.00	50,000.00	-40,000.00	-44.44%
355.1075.5360.000	POSTAGE & SHIPPING	88.62	0.00	0.00	0.00	0.00	0.00	0.00%
355.1075.5370.000	PRINTING & BINDING	138.70	0.00	0.00	0.00	0.00	0.00	0.00%
355.1075.5440.000	TAXES PAID	11,838.00	2,000.00	6,139.00	10,000.00	1,000.00	-9,000.00	-90.00%
355.1075.5485.000	STORM WATER	809.68	0.00	0.00	1,000.00	1,000.00	0.00	0.00%
355.1075.5570.000	VEHICLE GAS	77.59	0.00	0.00	0.00	0.00	0.00	0.00%
355.1075.5600.000	SUPPLIES	3,455.51	0.00	101.85	150.00	0.00	-150.00	-100.00%
355.1075.5781.000	LAND ACQUISITION	110,503.00	50,000.00	2,000.00	10,000.00	4,000.00	-6,000.00	-60.00%
355.1075.5980.000	REFUNDS/REIMB	4,000.00	0.00	0.00	0.00	0.00	0.00	0.00%
	Total Function: 1075 - Code Enforcement:	**906,564.79**	**768,600.00**	**563,957.17**	**837,850.00**	**289,365.00**	**-548,485.00**	**-65.46%**
Function: 6021 - Finance								
355.6021.5230.000	CONSULTING & PROF FEES	0.00	0.00	2,071.00	2,071.00	0.00	-2,071.00	-100.00%
355.6021.5830.000	OTHER DEBT ISSUANCE EXP	0.00	0.00	300.00	300.00	0.00	-300.00	-100.00%
	Total Function: 6021 - Finance:	**0.00**	**0.00**	**2,371.00**	**2,371.00**	**0.00**	**-2,371.00**	**-100.00%**
	Total Fund: 355 - 2015 GO BONDS (D&D):	**906,564.79**	**768,600.00**	**566,328.17**	**840,221.00**	**289,365.00**	**-550,856.00**	**-65.56%**
Fund: 360 - 2019 GO BONDS & PROJECTS								
Function: 2010 - Roads, Bridges, Sidewalks								
360.2010.5342.000	CONTRACT-OUTSIDE HELP	0.00	0.00	1,444.00	1,444.00	0.00	-1,444.00	-100.00%
	Total Function: 2010 - Roads, Bridges, Sidewalks:	**0.00**	**0.00**	**1,444.00**	**1,444.00**	**0.00**	**-1,444.00**	**-100.00%**
Function: 2011 - Sidewalks								
360.2011.5233.000	ENGINEERING FEES	29,593.00	0.00	0.00	0.00	0.00	0.00	0.00%
360.2011.5342.000	CONTRACT - OUTSIDE HELP	39,449.63	390,000.00	525,205.92	525,206.00	0.00	-525,206.00	-100.00%
360.2011.5351.000	CONTRACT-CONCRETE REPAIR	0.00	0.00	0.00	0.00	0.00	0.00	0.00%
360.2011.5783.000	R.O.W. - LAND TEMPORARY	1,260.00	0.00	0.00	0.00	0.00	0.00	0.00%
	Total Function: 2011 - Sidewalks:	**70,302.63**	**390,000.00**	**525,205.92**	**525,206.00**	**0.00**	**-525,206.00**	**-100.00%**
Function: 2012 - Street Construction								
360.2012.5351.000	CONTRACT-CONCRETE REPAIR	0.00	0.00	0.00	0.00	0.00	0.00	0.00%
	Total Function: 2012 - Street Construction:	**0.00**	**0.00**	**0.00**	**0.00**	**0.00**	**0.00**	**0.00%**
Function: 4030 - Parks								
360.4030.5342.000	CONTRACT-OUTSIDE HELP	17,884.65	400,000.00	0.00	0.00	0.00	0.00	0.00%
360.4030.5785.000	LAND IMPROVEMENTS	34,723.06	0.00	0.00	0.00	0.00	0.00	0.00%
	Total Function: 4030 - Parks:	**52,607.71**	**400,000.00**	**0.00**	**0.00**	**0.00**	**0.00**	**0.00%**
Function: 9000 - 9000								
360.9000.7500.110	TRANSFER OUT - FUND 110	0.00	0.00	244,285.24	245,729.00	0.00	-245,729.00	-100.00%
360.9000.7500.355	TRANSFER OUT - D&D Fund	250,000.00	0.00	0.00	0.00	0.00	0.00	0.00%

Budget Comparison Report

Account Number		2021-2022 Total Activity	2022-2023 Total Budget	2022-2023 YTD Activity Through Feb	Parent Budget 2022-2023 FY2023 Amend	Comparison 1 Budget 2023-2024 FY2024 Dept Request	Comparison 1 to Parent Budget Increase / (Decrease)	%
360.9000.7500.362	TRANSFER OUT - FUND 362	250,000.00	0.00	0.00	0.00	0.00	0.00	0.00%
360.9000.7500.363	TRANSFER OUT - FUND 363	0.00	0.00	246,368.90	246,090.00	0.00	-246,090.00	-100.00%
360.9000.7500.383	TRANSFER OUT - COLISEUM FU	32,102.09	0.00	0.00	0.00	0.00	0.00	0.00%
360.9000.7500.395	TRANSFER OUT - FUN 395	1,218,371.91	104,300.00	344,190.08	344,190.00	0.00	-344,190.00	-100.00%
	Total Function: 9000 - 9000:	**1,750,474.00**	**104,300.00**	**834,844.22**	**836,009.00**	**0.00**	**-836,009.00**	**-100.00%**
	Total Fund: 360 - 2019 GO BONDS & PROJECTS:	**1,873,384.34**	**894,300.00**	**1,361,494.14**	**1,362,659.00**	**0.00**	**-1,362,659.00**	**-100.00%**
Fund: 362 - 2020 GO BONDS								
Function: 2012 - Street Construction								
362.2012.5233.000	ENGINEERING FEES	8,407.00	0.00	16,025.00	28,435.00	40,553.00	12,118.00	42.62%
362.2012.5331.000	PAYMENTS-OTHER ENTITIES	18,435.98	0.00	8,526.27	21,565.00	0.00	-21,565.00	-100.00%
362.2012.5342.000	CONTRACT-OUTSIDE HELP	0.00	927,473.00	0.00	0.00	1,180,000.00	1,180,000.00	0.00%
362.2012.5348.000	CONTRACT-OTHER	0.00	0.00	0.00	100,000.00	0.00	-100,000.00	-100.00%
	Total Function: 2012 - Street Construction:	**26,842.98**	**927,473.00**	**24,551.27**	**150,000.00**	**1,220,553.00**	**1,070,553.00**	**713.70%**
Function: 2020 - Parking								
362.2020.5230.000	CONSULTING & PROF FEES	255,724.21	0.00	0.00	0.00	0.00	0.00	0.00%
362.2020.5342.000	CONTRACT - OUTSIDE HELP	6,610.00	0.00	0.00	0.00	0.00	0.00	0.00%
362.2020.5785.000	LAND IMPROVEMENTS	26,403.42	0.00	0.00	0.00	0.00	0.00	0.00%
	Total Function: 2020 - Parking:	**288,737.63**	**0.00**	**0.00**	**0.00**	**0.00**	**0.00**	**0.00%**
Function: 4030 - Parks								
362.4030.5342.000	CONTRACT-OUTSIDE HELP	504,094.60	0.00	0.00	0.00	0.00	0.00	0.00%
	Total Function: 4030 - Parks:	**504,094.60**	**0.00**	**0.00**	**0.00**	**0.00**	**0.00**	**0.00%**
Function: 5010 - Community Beautification								
362.5010.5233.000	ENGINEERING FEES	756.00	0.00	0.00	0.00	0.00	0.00	0.00%
	Total Function: 5010 - Community Beautification:	**756.00**	**0.00**	**0.00**	**0.00**	**0.00**	**0.00**	**0.00%**
	Total Fund: 362 - 2020 GO BONDS:	**820,431.21**	**927,473.00**	**24,551.27**	**150,000.00**	**1,220,553.00**	**1,070,553.00**	**713.70%**
Fund: 363 - 2021 GO BONDS								
Function: 1099 - Police and Fire Building Exps								
363.1099.5233.000	ENGINEERING FEES	0.00	0.00	0.00	5,000.00	15,000.00	10,000.00	200.00%
363.1099.5342.000	CONTRACT-OUTSIDE HELP	0.00	0.00	0.00	86,357.00	0.00	-86,357.00	-100.00%
363.1099.5718.000	MINOR EQUIPMENT	0.00	0.00	329.99	0.00	0.00	0.00	0.00%
	Total Function: 1099 - Police and Fire Building Exps:	**0.00**	**0.00**	**329.99**	**91,357.00**	**15,000.00**	**-76,357.00**	**-83.58%**
Function: 2010 - Roads, Bridges, Sidewalks								
363.2010.5233.000	ENGINEERING FEES	62,272.00	44,400.00	84,512.00	190,128.00	120,000.00	-70,128.00	-36.88%
363.2010.5342.000	CONTRACT - OUTSIDE HELP	0.00	738,800.00	268,556.05	768,557.00	1,577,600.00	809,043.00	105.27%
363.2010.5600.000	OPERATING SUPPLIES	0.00	0.00	11,717.32	11,800.00	0.00	-11,800.00	-100.00%
363.2010.5617.000	RM-OTHER	0.00	0.00	13,402.28	59,435.00	100,000.00	40,565.00	68.25%

Account Number		2021-2022 Total Activity	2022-2023 Total Budget	2022-2023 YTD Activity Through Feb	Parent Budget 2022-2023 FY2023 Amend	Comparison 1 Budget 2023-2024 FY2024 Dept Request	Comparison 1 to Parent Budget Increase / (Decrease)	%
363.2010.5718.000	MINOR EQUIPMENT	0.00	0.00	380.93	400.00	0.00	-400.00	-100.00%
Total Function: 2010 - Roads, Bridges, Sidewalks:		**62,272.00**	**783,200.00**	**378,568.58**	**1,030,320.00**	**1,797,600.00**	**767,280.00**	**74.47%**
Function: 2012 - Street Construction								
363.2012.5233.000	ENGINEERING FEES	390,555.50	451,313.00	18,911.66	171,720.00	361,050.00	189,330.00	110.26%
363.2012.5251.000	LICENSE & PERMITS	0.00	0.00	755.00	755.00	0.00	-755.00	-100.00%
363.2012.5342.000	CONTRACT-OUTSIDE HELP	0.00	6,094,000.00	101,309.01	1,503,845.00	8,567,715.00	7,063,870.00	469.72%
363.2012.5348.000	CONTRACT-OTHER	0.00	0.00	0.00	150,000.00	0.00	-150,000.00	-100.00%
363.2012.5718.000	MINOR EQUIPMENT	0.00	0.00	16,847.71	0.00	0.00	0.00	0.00%
Total Function: 2012 - Street Construction:		**390,555.50**	**6,545,313.00**	**137,823.38**	**1,826,320.00**	**8,928,765.00**	**7,102,445.00**	**388.89%**
Function: 4030 - Parks								
363.4030.5342.000	CONTRACT-OUTSIDE HELP	0.00	0.00	0.00	350,000.00	50,000.00	-300,000.00	-85.71%
Total Function: 4030 - Parks:		**0.00**	**0.00**	**0.00**	**350,000.00**	**50,000.00**	**-300,000.00**	**-85.71%**
Function: 6021 - Finance								
363.6021.5230.000	CONSULTING & PROF FEES	46,315.00	0.00	0.00	0.00	0.00	0.00	0.00%
363.6021.5234.000	LEGAL EXPENSES	16,000.00	0.00	0.00	0.00	0.00	0.00	0.00%
363.6021.5830.000	OTHER DEBT SERVICE EXP	300.00	0.00	0.00	0.00	0.00	0.00	0.00%
Total Function: 6021 - Finance:		**62,615.00**	**0.00**	**0.00**	**0.00**	**0.00**	**0.00**	**0.00%**
Function: 9000 - 9000								
363.9000.7500.110	TRANSFER IN - FUND 110 RUT	0.00	0.00	0.00	352,323.00	0.00	-352,323.00	-100.00%
363.9000.7500.355	TRANSFER OUT TO D&D 355	1,050,000.00	0.00	0.00	0.00	0.00	0.00	0.00%
363.9000.7500.360	TRANSFER OUT - 2019 GO BON	0.00	0.00	0.00	25,065.00	0.00	-25,065.00	-100.00%
363.9000.7500.362	TRANSFER TO 2020 GO	157,949.93	0.00	0.00	0.00	0.00	0.00	0.00%
363.9000.7500.395	TRANSFER OUT - FUND 395	0.00	0.00	0.00	5,796.00	7,000.00	1,204.00	20.77%
Total Function: 9000 - 9000:		**1,207,949.93**	**0.00**	**0.00**	**383,184.00**	**7,000.00**	**-376,184.00**	**-98.17%**
Total Fund: 363 - 2021 GO BONDS:		**1,723,392.43**	**7,328,513.00**	**516,721.95**	**3,681,181.00**	**10,798,365.00**	**7,117,184.00**	**193.34%**
Fund: 364 - 2022 GO BONDS								
Function: 2010 - Roads, Bridges, Sidewalks								
364.2010.5342.000	CONTRACT - OUTSIDE HELP	0.00	4,150,000.00	0.00	100,000.00	301,786.00	201,786.00	201.79%
Total Function: 2010 - Roads, Bridges, Sidewalks:		**0.00**	**4,150,000.00**	**0.00**	**100,000.00**	**301,786.00**	**201,786.00**	**201.79%**
Function: 2011 - Sidewalks								
364.2011.5233.000	ENGINEERING FEES	0.00	70,000.00	0.00	70,000.00	37,000.00	-33,000.00	-47.14%
364.2011.5342.000	CONTRACT - OUTSIDE HELP	0.00	530,000.00	0.00	0.00	507,000.00	507,000.00	0.00%
Total Function: 2011 - Sidewalks:		**0.00**	**600,000.00**	**0.00**	**70,000.00**	**544,000.00**	**474,000.00**	**677.14%**
Function: 2012 - Street Construction								
364.2012.5233.000	ENGINEERING FEES	0.00	0.00	28,439.00	490,500.00	163,500.00	-327,000.00	-66.67%
Total Function: 2012 - Street Construction:		**0.00**	**0.00**	**28,439.00**	**490,500.00**	**163,500.00**	**-327,000.00**	**-66.67%**

Budget Comparison Report

Account Number		2021-2022 Total Activity	2022-2023 Total Budget	2022-2023 YTD Activity Through Feb	Parent Budget 2022-2023 FY2023 Amend	Comparison 1 Budget 2023-2024 FY2024 Dept Request	Comparison 1 to Parent Budget Increase / (Decrease)	%
Function: 2020 - Parking								
364.2020.5233.000	ENGINEERING FEES	0.00	156,000.00	0.00	20,000.00	50,000.00	30,000.00	150.00%
364.2020.5342.000	CONTRACT - OUTSIDE HELP	0.00	234,000.00	0.00	234,000.00	809,500.00	575,500.00	245.94%
	Total Function: 2020 - Parking:	**0.00**	**390,000.00**	**0.00**	**254,000.00**	**859,500.00**	**605,500.00**	**238.39%**
Function: 4030 - Parks								
364.4030.5233.000	ENGINEERING FEES	0.00	0.00	37,682.50	50,000.00	0.00	-50,000.00	-100.00%
364.4030.5342.000	CONTRACT-OUTSIDE HELP	0.00	4,260,000.00	0.00	5,260,000.00	0.00	-5,260,000.00	-100.00%
	Total Function: 4030 - Parks:	**0.00**	**4,260,000.00**	**37,682.50**	**5,310,000.00**	**0.00**	**-5,310,000.00**	**-100.00%**
Function: 6021 - Finance								
364.6021.5230.000	CONSULTING & PROF FEES	0.00	0.00	58,444.00	58,544.00	0.00	-58,544.00	-100.00%
364.6021.5234.000	LEGAL EXPENSES	0.00	0.00	0.00	104,000.00	0.00	-104,000.00	-100.00%
364.6021.5830.000	OTHER DEBT SERVICE EXP	0.00	0.00	300.00	300.00	0.00	-300.00	-100.00%
	Total Function: 6021 - Finance:	**0.00**	**0.00**	**58,744.00**	**162,844.00**	**0.00**	**-162,844.00**	**-100.00%**
Function: 9000 - 9000								
364.9000.7500.355	TRANSFER OUT OT D&D 355	0.00	600,000.00	0.00	0.00	0.00	0.00	0.00%
364.9000.7500.363	TRANSFER OUT - FUND 363 20	0.00	0.00	0.00	0.00	2,463,464.00	2,463,464.00	0.00%
	Total Function: 9000 - 9000:	**0.00**	**600,000.00**	**0.00**	**0.00**	**2,463,464.00**	**2,463,464.00**	**0.00%**
	Total Fund: 364 - 2022 GO BONDS:	**0.00**	**10,000,000.00**	**124,865.50**	**6,387,344.00**	**4,332,250.00**	**-2,055,094.00**	**-32.17%**
Fund: 365 - 2023 GO BONDS								
Function: 2010 - Roads, Bridges, Sidewalks								
365.2010.5342.000	CONTRACT - OUTSIDE HELP	0.00	0.00	0.00	0.00	10,856,000.00	10,856,000.00	0.00%
	Total Function: 2010 - Roads, Bridges, Sidewalks:	**0.00**	**0.00**	**0.00**	**0.00**	**10,856,000.00**	**10,856,000.00**	**0.00%**
Function: 2011 - Sidewalks								
365.2011.5342.000	CONTRACT - OUTSIDE HELP	0.00	0.00	0.00	0.00	500,000.00	500,000.00	0.00%
	Total Function: 2011 - Sidewalks:	**0.00**	**0.00**	**0.00**	**0.00**	**500,000.00**	**500,000.00**	**0.00%**
	Total Fund: 365 - 2023 GO BONDS:	**0.00**	**0.00**	**0.00**	**0.00**	**11,356,000.00**	**11,356,000.00**	**0.00%**
Fund: 381 - 2019 CY STREET,SIDEWALK,PARKING PROJECTS								
Function: 2011 - Sidewalks								
381.2011.5233.000	ENGINEERING FEES	10,231.61	0.00	0.00	0.00	0.00	0.00	0.00%
381.2011.5342.000	CONTRACT - OUTSIDE HELP	550,966.74	0.00	0.00	0.00	0.00	0.00	0.00%
	Total Function: 2011 - Sidewalks:	**561,198.35**	**0.00**	**0.00**	**0.00**	**0.00**	**0.00**	**0.00%**
Function: 2020 - Parking								
381.2020.5233.000	ENGINEERING FEES	30,135.32	0.00	0.00	0.00	0.00	0.00	0.00%
381.2020.5342.000	CONTRACT - OUTSIDE HELP	512,210.06	0.00	0.00	0.00	0.00	0.00	0.00%
	Total Function: 2020 - Parking:	**542,345.38**	**0.00**	**0.00**	**0.00**	**0.00**	**0.00**	**0.00%**

Budget Comparison Report

Account Number		2021-2022 Total Activity	2022-2023 Total Budget	2022-2023 YTD Activity Through Feb	Parent Budget 2022-2023 FY2023 Amend	Comparison 1 Budget 2023-2024 FY2024 Dept Request	Comparison 1 to Parent Budget Increase / (Decrease)	%
Function: 9000 - 9000								
381.9000.7500.395	TRANSFER OUT - FUND 395	150.02	0.00	0.00	0.00	0.00	0.00	0.00%
381.9000.7500.740	TRANSFER OUT - FUND 741	33,732.65	0.00	0.00	0.00	0.00	0.00	0.00%
	Total Function: 9000 - 9000:	**33,882.67**	**0.00**	**0.00**	**0.00**	**0.00**	**0.00**	**0.00%**
Total Fund: 381 - 2019 CY STREET,SIDEWALK,PARKING PROJE		**1,137,426.40**	**0.00**	**0.00**	**0.00**	**0.00**	**0.00**	**0.00%**
Fund: 383 - COLISEUM REMODEL								
Function: 4065 - Coliseum								
383.4065.5230.000	CONSULTING & PROF FEES	1,170.00	0.00	0.00	0.00	0.00	0.00	0.00%
383.4065.5342.000	CONTRACT-OUTSIDE HELP	13,029.76	0.00	0.00	0.00	0.00	0.00	0.00%
383.4065.5750.000	OTHER CAP EQUIP > $5,000	14,400.00	0.00	0.00	0.00	0.00	0.00	0.00%
383.4065.5776.000	BUILDINGS & IMPROVEMENTS	3,712.43	0.00	0.00	0.00	0.00	0.00	0.00%
	Total Function: 4065 - Coliseum:	**32,312.19**	**0.00**	**0.00**	**0.00**	**0.00**	**0.00**	**0.00%**
	Total Fund: 383 - COLISEUM REMODEL:	**32,312.19**	**0.00**	**0.00**	**0.00**	**0.00**	**0.00**	**0.00%**
Fund: 389 - AMERICAN RESCUE PLAN								
Function: 1010 - Police Operations/Crime Prevention								
389.1010.5230.000	CONSULTING & PROF FEES	0.00	0.00	36,641.70	65,398.00	121,733.00	56,335.00	86.14%
Total Function: 1010 - Police Operations/Crime Prevention:		**0.00**	**0.00**	**36,641.70**	**65,398.00**	**121,733.00**	**56,335.00**	**86.14%**
Function: 9000 - 9000								
389.9000.7500.001	TRANSFER OUT - GEN FUND	187,901.62	288,147.00	0.00	288,147.00	49,389.00	-238,758.00	-82.86%
389.9000.7500.311	TRANSFER OUT - FUND 311 RIS	0.00	850,000.00	0.00	600,000.00	0.00	-600,000.00	-100.00%
389.9000.7500.363	TRANSFER OUT - FUND 363 20	0.00	2,000,000.00	0.00	0.00	2,461,741.00	2,461,741.00	0.00%
	Total Function: 9000 - 9000:	**187,901.62**	**3,138,147.00**	**0.00**	**888,147.00**	**2,511,130.00**	**1,622,983.00**	**182.74%**
Total Fund: 389 - AMERICAN RESCUE PLAN:		**187,901.62**	**3,138,147.00**	**36,641.70**	**953,545.00**	**2,632,863.00**	**1,679,318.00**	**176.11%**
Fund: 395 - ECONOMIC DEVELOPMENT PROJECT FUND								
Function: 2012 - Street Construction								
395.2012.5233.000	ENGINEERING FEES	41,489.85	0.00	914.00	6,710.00	7,000.00	290.00	4.32%
395.2012.5779.000	CAPITAL CONSTRCT-STREETS	96,459.12	1,365,270.00	931,590.54	1,357,186.00	0.00	-1,357,186.00	-100.00%
395.2012.5781.000	LAND ACQUISITION	0.00	0.00	0.00	0.00	0.00	0.00	0.00%
	Total Function: 2012 - Street Construction:	**137,948.97**	**1,365,270.00**	**932,504.54**	**1,363,896.00**	**7,000.00**	**-1,356,896.00**	**-99.49%**
Function: 5020 - Economic Development								
395.5020.5233.000	ENGINEERING FEES	9,535.00	0.00	0.00	0.00	0.00	0.00	0.00%
395.5020.5779.000	CAPITAL CONSTRCT-STREETS	1,167,347.06	0.00	0.00	0.00	0.00	0.00	0.00%
	Total Function: 5020 - Economic Development:	**1,176,882.06**	**0.00**	**0.00**	**0.00**	**0.00**	**0.00**	**0.00%**
Total Fund: 395 - ECONOMIC DEVELOPMENT PROJECT FUND:		**1,314,831.03**	**1,365,270.00**	**932,504.54**	**1,363,896.00**	**7,000.00**	**-1,356,896.00**	**-99.49%**

Budget Comparison Report

Account Number		2021-2022 Total Activity	2022-2023 Total Budget	2022-2023 YTD Activity Through Feb	Parent Budget 2022-2023 FY2023 Amend	Comparison 1 Budget 2023-2024 FY2024 Dept Request	Comparison 1 to Parent Budget Increase / (Decrease)	%
Fund: 610 - WATER POLLUTION CONTROL								
Function: 8015 - Sewer & Sewage Disposal								
610.8015.5010.010	REGULAR-NON UNION	953,468.52	990,926.00	646,111.65	993,643.00	1,012,857.00	19,214.00	1.93%
610.8015.5020.010	OVERTIME-NON UNION	16,028.95	20,000.00	10,605.75	20,000.00	20,000.00	0.00	0.00%
610.8015.5020.070	OVERTIME-PT TEMP	0.00	0.00	18.00	0.00	0.00	0.00	0.00%
610.8015.5030.070	PART-TIME TEMPORARY	3,080.75	5,000.00	2,784.00	5,000.00	5,000.00	0.00	0.00%
610.8015.5050.060	PART-TIME REGULAR	21,230.99	25,814.00	16,884.28	26,314.00	26,716.00	402.00	1.53%
610.8015.5057.010	CAR REIMB-NON UNION	589.64	585.00	315.00	540.00	540.00	0.00	0.00%
610.8015.5060.010	TERM PAYOUTS-NON UNION	3,899.07	0.00	0.00	0.00	0.00	0.00	0.00%
610.8015.5061.000	RHSA PAYOUT	0.00	13,700.00	0.00	0.00	25,975.00	25,975.00	0.00%
610.8015.5061.010	RHSA PAYOUTS-NON UNION	15,154.77	0.00	10,862.42	10,863.00	0.00	-10,863.00	-100.00%
610.8015.5101.010	SOCIAL SECURITY-NON UNION	57,695.13	60,831.00	38,673.57	60,990.00	62,572.00	1,582.00	2.59%
610.8015.5101.060	SOCIAL SECURITY-PT REGULAR	1,316.35	1,600.00	1,046.83	1,631.00	1,656.00	25.00	1.53%
610.8015.5101.070	SOCIAL SECURITY-PT TEMP	191.01	310.00	173.72	310.00	310.00	0.00	0.00%
610.8015.5102.010	MEDICARE-NON UNION	13,569.41	14,376.00	9,130.96	14,416.00	14,694.00	278.00	1.93%
610.8015.5102.060	MEDICARE-PT REGULAR	307.84	374.00	244.80	381.00	387.00	6.00	1.57%
610.8015.5102.070	MEDICARE-TEMPORARY	44.67	73.00	40.63	73.00	73.00	0.00	0.00%
610.8015.5111.010	IPERS-NON UNION	91,522.81	93,594.00	60,705.80	92,562.00	95,665.00	3,103.00	3.35%
610.8015.5111.060	IPERS-PT REGULAR	2,004.19	2,437.00	1,546.67	2,437.00	2,522.00	85.00	3.49%
610.8015.5121.010	GRP INSUR-NON UNION	143,128.20	158,802.00	104,726.04	167,780.00	187,835.00	20,055.00	11.95%
610.8015.5122.000	RETIREES GRP HLTH INS	9,351.10	12,876.00	0.00	0.00	0.00	0.00	0.00%
610.8015.5123.010	WORKCOMP-NON UNION	10,093.53	18,627.00	12,352.52	18,649.00	19,277.00	628.00	3.37%
610.8015.5123.060	WORKCOMP-PT REGULAR	240.12	541.00	344.02	542.00	561.00	19.00	3.51%
610.8015.5123.070	WORKCOMP-TEMPORARY	34.84	105.00	58.84	105.00	105.00	0.00	0.00%
610.8015.5132.000	CLOTHING EXPENSE	5,042.79	5,560.00	2,676.46	5,560.00	6,560.00	1,000.00	17.99%
610.8015.5151.000	PHYSICALS/IMMUNIZATIONS	875.00	875.00	350.00	875.00	875.00	0.00	0.00%
610.8015.5210.000	ADVERTISING & LEGAL PUB	0.00	1,000.00	28.28	1,000.00	1,000.00	0.00	0.00%
610.8015.5216.000	BACKGROUND CHECKS	50.00	60.00	10.00	60.00	60.00	0.00	0.00%
610.8015.5220.000	COLLECTION COSTS/REFUNDS	95,995.16	99,200.00	56,368.01	99,200.00	99,200.00	0.00	0.00%
610.8015.5230.000	CONSULTING & PROF FEES	275.00	0.00	365.00	275.00	275.00	0.00	0.00%
610.8015.5231.000	ACCOUNTING FEES	73,500.00	73,025.00	48,683.36	73,025.00	76,401.00	3,376.00	4.62%
610.8015.5232.000	AUDITING FEES	4,710.00	5,240.00	5,220.00	5,220.00	5,430.00	210.00	4.02%
610.8015.5233.000	ENGINEERING FEES	76,672.35	30,000.00	2,645.75	30,000.00	30,000.00	0.00	0.00%
610.8015.5234.000	LEGAL EXPENSES	0.00	2,500.00	82.50	2,500.00	2,500.00	0.00	0.00%
610.8015.5251.000	LICENSE & PERMITS	1,495.50	2,700.00	1,595.91	2,700.00	2,700.00	0.00	0.00%
610.8015.5280.000	DUES, MEMBER, SUBSCRIPTN	1,314.57	1,200.00	767.19	1,200.00	1,450.00	250.00	20.83%
610.8015.5290.000	INSURANCE - GENERAL	77,292.85	85,598.00	0.00	103,205.00	123,846.00	20,641.00	20.00%
610.8015.5300.000	INSURANCE - TORT LIAB	13,312.37	12,803.00	0.00	15,158.00	18,190.00	3,032.00	20.00%
610.8015.5339.000	MEDICAL CLAIMS PAID BY CITY	430.00	500.00	437.68	500.00	500.00	0.00	0.00%

Budget Comparison Report

Account Number		2021-2022 Total Activity	2022-2023 Total Budget	2022-2023 YTD Activity Through Feb	Parent Budget 2022-2023 FY2023 Amend	Comparison 1 Budget 2023-2024 FY2024 Dept Request	Comparison 1 to Parent Budget Increase / (Decrease)	%
610.8015.5339.010	MEDICAL CLAIMS PAID BY CITY	0.00	500.00	0.00	500.00	500.00	0.00	0.00%
610.8015.5342.000	CONTRACT-OUTSIDE HELP	156,549.21	280,000.00	41,337.47	180,000.00	235,000.00	55,000.00	30.56%
610.8015.5344.000	CONTRACT-MAINTENANCE	4,674.35	35,000.00	6,209.41	35,000.00	35,000.00	0.00	0.00%
610.8015.5347.000	CONTRACT-SOFTWARE MAINT	4,374.90	4,250.00	6,897.50	4,250.00	4,250.00	0.00	0.00%
610.8015.5351.000	CONTRACT-CONCRETE REPAIR	854,885.05	10,000.00	52,351.07	52,351.00	10,000.00	-42,351.00	-80.90%
610.8015.5360.000	POSTAGE & SHIPPING	502.74	1,400.00	576.52	1,400.00	1,400.00	0.00	0.00%
610.8015.5380.000	RENTS & LEASES	928.85	2,500.00	216.00	2,500.00	2,500.00	0.00	0.00%
610.8015.5386.000	CONTRACT LAWN CARE	4,570.00	9,500.00	5,630.00	9,500.00	10,500.00	1,000.00	10.53%
610.8015.5410.000	REPAIRS & MAINTENANCE	79,161.07	84,000.00	60,537.92	84,000.00	75,000.00	-9,000.00	-10.71%
610.8015.5440.000	TAXES PAID	9,656.00	10,000.00	4,807.00	10,000.00	10,000.00	0.00	0.00%
610.8015.5441.000	SALES TAXES PAID/RECEIVED	14,813.63	50,000.00	6,154.80	20,000.00	20,000.00	0.00	0.00%
610.8015.5450.000	TELEPHONE/OTHR COMMNCT	9,782.87	11,000.00	6,751.44	11,000.00	12,000.00	1,000.00	9.09%
610.8015.5460.000	CONFERENCE EXPENSE	4,265.00	7,500.00	1,460.00	7,500.00	7,500.00	0.00	0.00%
610.8015.5461.000	TRAVEL - AIRFARE	0.00	0.00	673.19	674.00	0.00	-674.00	-100.00%
610.8015.5462.000	TRAVEL-OTHER	161.55	200.00	211.76	212.00	200.00	-12.00	-5.66%
610.8015.5465.000	TRAVEL - HOTEL/MOTEL	1,118.36	1,600.00	1,644.24	1,645.00	1,600.00	-45.00	-2.74%
610.8015.5481.000	ELECTRICITY	356,567.63	390,000.00	240,803.26	390,000.00	405,000.00	15,000.00	3.85%
610.8015.5482.000	NATURAL GAS	79,749.18	80,000.00	63,443.97	80,000.00	80,000.00	0.00	0.00%
610.8015.5483.000	WATER	11,642.91	12,000.00	6,872.62	12,000.00	12,000.00	0.00	0.00%
610.8015.5484.000	PROPANE	80.37	230.00	73.83	230.00	230.00	0.00	0.00%
610.8015.5485.000	STORM WATER FEES	2,453.13	2,453.00	2,453.13	2,454.00	2,454.00	0.00	0.00%
610.8015.5487.000	FUEL OIL	0.00	2,500.00	0.00	2,500.00	2,500.00	0.00	0.00%
610.8015.5565.000	VEHICLE OPER/MAINT SPPLY	3,052.35	5,500.00	3,932.68	5,500.00	6,500.00	1,000.00	18.18%
610.8015.5570.000	VEHICLE GAS	3,613.37	3,500.00	3,531.08	5,000.00	5,500.00	500.00	10.00%
610.8015.5571.000	VEHICLE DIESEL FUEL	524.31	900.00	554.88	900.00	1,100.00	200.00	22.22%
610.8015.5600.000	OPERATING SUPPLIES	131,038.54	200,000.00	51,412.91	165,000.00	165,000.00	0.00	0.00%
610.8015.5603.000	LAB EXPENSES	45,947.76	55,000.00	25,506.97	55,000.00	65,000.00	10,000.00	18.18%
610.8015.5605.000	OFFICE SUPPLIES	1,775.64	1,500.00	800.88	1,500.00	1,500.00	0.00	0.00%
610.8015.5612.000	COMPUTER COMPONENTS	197.71	3,000.00	543.61	3,000.00	3,000.00	0.00	0.00%
610.8015.5703.000	MINOR COMPUTER	3,630.95	4,000.00	0.00	8,000.00	4,000.00	-4,000.00	-50.00%
610.8015.5704.000	MINOR SOFTWARE <$5,000	475.00	0.00	0.00	0.00	0.00	0.00	0.00%
610.8015.5718.000	MINOR EQUIP, UNCLASSFIED	150,653.32	117,600.00	47,066.02	60,000.00	60,000.00	0.00	0.00%
610.8015.5740.000	COMPUTER EQUIP > $5,000	0.00	60,000.00	0.00	0.00	0.00	0.00	0.00%
610.8015.5741.000	COMPUTER SOFTWARE > 5,00	0.00	105,000.00	0.00	5,000.00	0.00	-5,000.00	-100.00%
610.8015.5750.000	OTHER CAP EQUIP > $5,000	147,593.87	702,600.00	135,364.79	329,087.00	1,123,500.00	794,413.00	241.40%
610.8015.5776.000	BUILDINGS & IMPROVEMENTS	18,075.00	93,000.00	115.00	68,000.00	132,000.00	64,000.00	94.12%
610.8015.5810.000	PRINCIPAL REDEMPTION	17,387.56	0.00	0.00	0.00	540,000.00	540,000.00	0.00%
610.8015.5820.000	INTEREST PAYMENTS	27.58	0.00	0.00	13,362.00	128,738.00	115,376.00	863.46%

Account Number		2021-2022 Total Activity	2022-2023 Total Budget	2022-2023 YTD Activity Through Feb	Parent Budget 2022-2023 FY2023 Amend	Comparison 1 Budget 2023-2024 FY2024 Dept Request	Comparison 1 to Parent Budget Increase / (Decrease)	%
610.8015.5980.000	REFUNDS/REIMB	23,796.30	14,000.00	17,709.65	74,000.00	14,000.00	-60,000.00	-81.08%
Total Function: 8015 - Sewer & Sewage Disposal:		**3,837,643.54**	**4,101,065.00**	**1,831,499.24**	**3,457,779.00**	**5,023,204.00**	**1,565,425.00**	**45.27%**
Function: 8016 - Sanitary Sewer								
610.8016.5010.010	REGULAR-NON UNION	91,067.78	155,633.00	96,237.96	156,902.00	163,231.00	6,329.00	4.03%
610.8016.5010.040	REGULAR-PPME UNION	158,286.47	174,490.00	114,660.21	177,490.00	153,261.00	-24,229.00	-13.65%
610.8016.5020.040	OVERTIME-PPME UNION	2,127.71	5,000.00	861.62	5,000.00	5,000.00	0.00	0.00%
610.8016.5060.010	TERM PAYOUTS-NON UNION	1,559.68	0.00	0.00	0.00	0.00	0.00	0.00%
610.8016.5060.040	TERM PAYOUTS-PPME UNION	1,779.76	0.00	281.78	0.00	0.00	0.00	0.00%
610.8016.5061.010	RHSA PAYOUT	0.00	0.00	0.00	0.00	12,000.00	12,000.00	0.00%
610.8016.5101.010	SOCIAL SECURITY-NON UNION	5,475.57	9,649.00	5,725.50	9,728.00	10,120.00	392.00	4.03%
610.8016.5101.040	SOCIAL SECURITY-PPME UNIO	9,616.80	10,818.00	6,931.99	11,004.00	9,502.00	-1,502.00	-13.65%
610.8016.5102.010	MEDICARE-NON UNION	1,280.85	2,257.00	1,339.25	2,275.00	2,367.00	92.00	4.04%
610.8016.5102.040	MEDICARE-PPME UNION	2,248.88	2,530.00	1,621.22	2,574.00	2,222.00	-352.00	-13.68%
610.8016.5111.010	IPERS-NON UNION	8,597.09	14,692.00	8,950.15	14,677.00	15,409.00	732.00	4.99%
610.8016.5111.040	IPERS-PPME UNION	15,143.51	16,472.00	9,402.69	16,472.00	14,468.00	-2,004.00	-12.17%
610.8016.5121.010	GRP INSUR-NON UNION	12,262.55	22,259.00	14,946.62	23,076.00	24,363.00	1,287.00	5.58%
610.8016.5121.040	GRP INSUR-PPME UNION	32,324.52	35,493.00	23,155.29	37,315.00	39,572.00	2,257.00	6.05%
610.8016.5122.000	RETIREES GRP HLTH INS	15,382.90	17,642.00	8,047.88	12,523.00	14,394.00	1,871.00	14.94%
610.8016.5123.010	WORKCOMP-NON UNION	1,277.09	2,348.00	2,174.68	2,347.00	2,473.00	126.00	5.37%
610.8016.5123.040	WORKCOMP-PPME UNION	3,534.42	3,659.00	4,106.33	3,664.00	3,218.00	-446.00	-12.17%
610.8016.5132.000	CLOTHING EXPENSE	1,110.26	1,500.00	391.28	1,500.00	1,500.00	0.00	0.00%
610.8016.5151.000	PHYSICALS/IMMUNIZATIONS	233.40	315.00	250.76	315.00	315.00	0.00	0.00%
610.8016.5192.070	UNEMPLOYMENT-TEMPORAR	0.00	0.00	1,636.33	0.00	0.00	0.00	0.00%
610.8016.5210.000	ADVERTISING & LEGAL PUB	52.55	0.00	15.00	15.00	0.00	-15.00	-100.00%
610.8016.5216.000	BACKGROUND CHECKS	24.00	0.00	0.00	0.00	0.00	0.00	0.00%
610.8016.5230.000	CONSULTING & PROF FEES	3,476.62	3,000.00	1,690.80	7,500.00	7,500.00	0.00	0.00%
610.8016.5233.000	ENGINEERING FEES	89,368.25	307,791.00	696.00	696.00	0.00	-696.00	-100.00%
610.8016.5234.000	LEGAL EXPENSES	0.00	40,398.00	412.50	2,000.00	2,000.00	0.00	0.00%
610.8016.5251.000	LICENSE & PERMITS	85.50	100.00	39.30	100.00	100.00	0.00	0.00%
610.8016.5260.000	DAMAGES/TORT LIAB CLAIMS	0.00	0.00	1,093.47	0.00	0.00	0.00	0.00%
610.8016.5280.000	DUES, MEMBER, SUBSCRIPTN	100.00	2,494.00	72.00	2,494.00	2,494.00	0.00	0.00%
610.8016.5290.000	INSURANCE - GENERAL	6,595.91	7,389.00	0.00	9,460.00	11,352.00	1,892.00	20.00%
610.8016.5300.000	INSURANCE - TORT LIAB	2,856.62	2,958.00	0.00	2,728.00	3,274.00	546.00	20.01%
610.8016.5339.000	MEDICAL CLAIMS PAID BY CIT	69.56	500.00	164.30	500.00	500.00	0.00	0.00%
610.8016.5342.000	CONTRACT-OUTSIDE HELP	471.53	4,049,755.00	358.20	10,000.00	10,000.00	0.00	0.00%
610.8016.5344.000	CONTRACT-MAINTENANCE	62,450.50	90,000.00	379.83	5,000.00	5,000.00	0.00	0.00%
610.8016.5347.000	CONTRACT-SOFTWARE MAINT	10,405.94	12,000.00	12,497.38	12,800.00	12,800.00	0.00	0.00%
610.8016.5360.000	POSTAGE & SHIPPING	39.18	200.00	0.00	200.00	200.00	0.00	0.00%
610.8016.5380.000	RENTS & LEASES	0.00	300.00	100.00	300.00	300.00	0.00	0.00%

Budget Comparison Report

Account Number		2021-2022 Total Activity	2022-2023 Total Budget	2022-2023 YTD Activity Through Feb	Parent Budget 2022-2023 FY2023 Amend	Comparison 1 Budget 2023-2024 FY2024 Dept Request	Comparison 1 to Parent Budget Increase / (Decrease)	%
610.8016.5410.000	REPAIRS & MAINTENANCE	5,001.93	18,000.00	6,636.35	18,000.00	18,000.00	0.00	0.00%
610.8016.5412.000	REPAIRS & MAINT LIFT STATIO	9,740.53	83,000.00	730.25	73,000.00	15,000.00	-58,000.00	-79.45%
610.8016.5450.000	TELEPHONE/OTHR COMMNCT	4,939.02	4,750.00	3,404.74	4,750.00	4,750.00	0.00	0.00%
610.8016.5460.000	CONFERENCE EXPENSE	420.00	2,500.00	0.00	2,500.00	2,500.00	0.00	0.00%
610.8016.5481.000	ELECTRICITY	12,209.09	14,600.00	7,817.75	15,600.00	16,000.00	400.00	2.56%
610.8016.5482.000	NATURAL GAS	1,769.80	1,200.00	1,549.00	1,200.00	1,200.00	0.00	0.00%
610.8016.5565.000	VEHICLE OPER/MAINT SPPLY	5,254.98	6,000.00	1,852.78	6,000.00	6,000.00	0.00	0.00%
610.8016.5570.000	VEHICLE GAS	4,349.38	4,000.00	3,221.93	5,700.00	5,700.00	0.00	0.00%
610.8016.5571.000	VEHICLE DIESEL FUEL	1,265.60	1,600.00	1,831.69	3,600.00	3,600.00	0.00	0.00%
610.8016.5600.000	OPERATING SUPPLIES	17,088.16	18,000.00	9,195.66	18,000.00	18,000.00	0.00	0.00%
610.8016.5605.000	OFFICE SUPPLIES	140.75	1,000.00	0.00	1,000.00	1,000.00	0.00	0.00%
610.8016.5612.000	COMPUTER COMPONENTS	0.00	1,000.00	39.00	1,000.00	1,000.00	0.00	0.00%
610.8016.5615.000	LIFT STATION OPERATING SUP	3,878.70	18,000.00	2,321.58	10,000.00	18,000.00	8,000.00	80.00%
610.8016.5702.000	MINOR OFFICE FURN/EQIUP	0.00	1,000.00	0.00	1,000.00	1,000.00	0.00	0.00%
610.8016.5703.000	MINOR COMPUTER	214.80	3,000.00	0.00	8,400.00	6,000.00	-2,400.00	-28.57%
610.8016.5718.000	MINOR EQUIP, UNCLASSFIED	2,041.92	5,000.00	161.40	5,000.00	5,000.00	0.00	0.00%
610.8016.5719.000	MINOR EQUIP, LIFT STATIONS	6,413.00	8,500.00	1,806.00	8,500.00	16,500.00	8,000.00	94.12%
610.8016.5750.000	OTHER CAP EQUIP > $5,000	24,523.94	342,000.00	335,108.90	356,109.00	20,000.00	-336,109.00	-94.38%
610.8016.5765.000	LIFT STATIONS	0.00	143,000.00	32,212.70	65,000.00	73,000.00	8,000.00	12.31%
610.8016.5776.000	BUILDINGS & IMPROVEMENTS	0.00	0.00	528.40	2,900.00	3,000.00	100.00	3.45%
610.8016.5810.000	PRINCIPAL REDEMPTION	1,467,000.00	1,493,000.00	131,000.00	1,493,000.00	1,513,000.00	20,000.00	1.34%
610.8016.5820.000	INTEREST PAYMENTS	205,415.92	182,597.00	91,982.00	182,597.00	158,344.00	-24,253.00	-13.28%
610.8016.5830.000	OTHER DEBT SERV EXP	1,700.00	1,700.00	850.00	1,700.00	1,700.00	0.00	0.00%
	Total Function: 8016 - Sanitary Sewer:	**2,312,672.92**	**7,345,089.00**	**950,490.45**	**2,815,211.00**	**2,437,229.00**	**-377,982.00**	**-13.43%**
Function: 9000 - 9000								
610.9000.7500.200	TRANSFER OUT - DEBT SERVIC	492,718.00	503,818.00	0.00	503,818.00	504,518.00	700.00	0.14%
610.9000.7500.612	TRANSFER OUT - FUND 612	366,642.10	0.00	0.00	0.00	0.00	0.00	0.00%
	Total Function: 9000 - 9000:	**859,360.10**	**503,818.00**	**0.00**	**503,818.00**	**504,518.00**	**700.00**	**0.14%**
	Total Fund: 610 - WATER POLLUTION CONTROL:	**7,009,676.56**	**11,949,972.00**	**2,781,989.69**	**6,776,808.00**	**7,964,951.00**	**1,188,143.00**	**17.53%**
Fund: 611 - WPCP REVENUE								
Function: 9000 - 9000								
611.9000.7500.363	TRANSFER OUT - FUND 363	0.00	740,000.00	0.00	0.00	523,900.00	523,900.00	0.00%
611.9000.7500.395	TRANSFER OUT - FUND 395	0.00	63,361.00	0.00	74,610.00	0.00	-74,610.00	-100.00%
611.9000.7500.610	TR TO OPERATING FUND	7,005,649.07	11,949,972.00	2,766,935.56	6,764,364.00	7,964,951.00	1,200,587.00	17.75%
611.9000.7500.612	TR TO WPCP REV BOND FUND	5,873.00	0.00	0.00	0.00	0.00	0.00	0.00%
611.9000.7500.615	TRANSFER OUT - FUND 615	125,005.50	0.00	90,135.15	47,402.00	447,500.00	400,098.00	844.05%

Budget Comparison Report

Account Number		2021-2022 Total Activity	2022-2023 Total Budget	2022-2023 YTD Activity Through Feb	Parent Budget 2022-2023 FY2023 Amend	Comparison 1 Budget 2023-2024 FY2024 Dept Request	Comparison 1 to Parent Budget Increase / (Decrease)	%
611.9000.7500.616	TR TO SANITARY SEWER	288,126.62	0.00	191,854.27	0.00	192,000.00	192,000.00	0.00%
	Total Function: 9000 - 9000:	**7,424,654.19**	**12,753,333.00**	**3,048,924.98**	**6,886,376.00**	**9,128,351.00**	**2,241,975.00**	**32.56%**
	Total Fund: 611 - WPCP REVENUE:	**7,424,654.19**	**12,753,333.00**	**3,048,924.98**	**6,886,376.00**	**9,128,351.00**	**2,241,975.00**	**32.56%**
Fund: 612 - WPCP REVENUE BOND FUND								
Function: 8016 - Sanitary Sewer								
612.8016.5233.000	ENGINEERING FEES	11,683.60	0.00	0.00	0.00	0.00	0.00	0.00%
612.8016.5234.000	LEGAL EXPENSES	8,000.00	0.00	0.00	0.00	0.00	0.00	0.00%
612.8016.5348.000	CONTRACT-OTHER	352,831.50	0.00	0.00	0.00	0.00	0.00	0.00%
	Total Function: 8016 - Sanitary Sewer:	**372,515.10**	**0.00**	**0.00**	**0.00**	**0.00**	**0.00**	**0.00%**
Function: 9000 - 9000								
612.9000.7500.381	TRANSFER OUT - FUND 381	288,550.00	0.00	0.00	0.00	0.00	0.00	0.00%
	Total Function: 9000 - 9000:	**288,550.00**	**0.00**	**0.00**	**0.00**	**0.00**	**0.00**	**0.00%**
	Total Fund: 612 - WPCP REVENUE BOND FUND:	**661,065.10**	**0.00**	**0.00**	**0.00**	**0.00**	**0.00**	**0.00%**
Fund: 615 - WPCP PLANT & IMPROVEMENTS								
Function: 8015 - Sewer & Sewage Disposal								
615.8015.5230.000	CONSULTING & PROF FEES	0.00	0.00	0.00	15,000.00	0.00	-15,000.00	-100.00%
615.8015.5233.000	ENGINEERING FEES	413,132.12	672,500.00	181,753.39	299,983.00	222,500.00	-77,483.00	-25.83%
615.8015.5342.000	CONTRACT-OUTSIDE HELP	0.00	7,733,660.00	318,898.77	2,681,700.00	3,750,600.00	1,068,900.00	39.86%
615.8015.5740.000	COMPUTER EQUIPMENT	0.00	0.00	0.00	0.00	172,500.00	172,500.00	0.00%
615.8015.5741.000	COMPUTER SOFTWARE	0.00	0.00	0.00	0.00	100,000.00	100,000.00	0.00%
	Total Function: 8015 - Sewer & Sewage Disposal:	**413,132.12**	**8,406,160.00**	**500,652.16**	**2,996,683.00**	**4,245,600.00**	**1,248,917.00**	**41.68%**
Function: 9000 - 9000								
615.9000.7500.364	TRANSFER OUT - FUN 364	0.00	0.00	0.00	0.00	489,500.00	489,500.00	0.00%
615.9000.7500.616	TRANSFER OUT - FUND 616	0.00	0.00	0.00	4,548,255.00	507,450.00	-4,040,805.00	-88.84%
	Total Function: 9000 - 9000:	**0.00**	**0.00**	**0.00**	**4,548,255.00**	**996,950.00**	**-3,551,305.00**	**-78.08%**
	Total Fund: 615 - WPCP PLANT & IMPROVEMENTS:	**413,132.12**	**8,406,160.00**	**500,652.16**	**7,544,938.00**	**5,242,550.00**	**-2,302,388.00**	**-30.52%**
Fund: 616 - SANITARY SEWER REHAB PROJECT								
Function: 8016 - Sanitary Sewer								
616.8016.5230.000	CONSULTING & PROF FEES	0.00	0.00	0.00	25,000.00	5,000.00	-20,000.00	-80.00%
616.8016.5233.000	ENGINEERING FEES	0.00	0.00	1,132.75	23,255.00	194,450.00	171,195.00	736.16%
616.8016.5348.000	CONTRACT-OTHER	0.00	0.00	190,721.52	4,500,000.00	500,000.00	-4,000,000.00	-88.89%
	Total Function: 8016 - Sanitary Sewer:	**0.00**	**0.00**	**191,854.27**	**4,548,255.00**	**699,450.00**	**-3,848,805.00**	**-84.62%**
	Total Fund: 616 - SANITARY SEWER REHAB PROJECT:	**0.00**	**0.00**	**191,854.27**	**4,548,255.00**	**699,450.00**	**-3,848,805.00**	**-84.62%**

Budget Comparison Report

Account Number		2021-2022 Total Activity	2022-2023 Total Budget	2022-2023 YTD Activity Through Feb	Parent Budget 2022-2023 FY2023 Amend	Comparison 1 Budget 2023-2024 FY2024 Dept Request	Comparison 1 to Parent Budget Increase / (Decrease)	%
Fund: 617 - SANITARY SEWER NEW CONSTRUCTN								
Function: 8016 - Sanitary Sewer								
617.8016.5980.000	REFUNDS/REIMB	2,900.00	0.00	0.00	0.00	0.00	0.00	0.00%
	Total Function: 8016 - Sanitary Sewer:	**2,900.00**	**0.00**	**0.00**	**0.00**	**0.00**	**0.00**	**0.00%**
	Total Fund: 617 - SANITARY SEWER NEW CONSTRUCTN:	**2,900.00**	**0.00**	**0.00**	**0.00**	**0.00**	**0.00**	**0.00%**
Fund: 650 - URBAN TREE FUND								
Function: 8040 - URBAN TREES								
650.8040.5010.010	REGULAR-NON UNION	0.00	14,097.00	0.00	0.00	0.00	0.00	0.00%
650.8040.5010.040	REGULAR-PPME UNION	0.00	10,894.00	0.00	0.00	0.00	0.00	0.00%
650.8040.5030.070	PART-TIME TEMPORARY	0.00	5,000.00	0.00	0.00	0.00	0.00	0.00%
650.8040.5101.010	SOCIAL SECURITY-NON UNION	0.00	874.00	0.00	0.00	0.00	0.00	0.00%
650.8040.5101.040	SOCIAL SECURITY-PPME UNIO	0.00	676.00	0.00	0.00	0.00	0.00	0.00%
650.8040.5102.010	MEDICARE-NON UNION	0.00	204.00	0.00	0.00	0.00	0.00	0.00%
650.8040.5102.040	MEDICARE-PPME UNION	0.00	159.00	0.00	0.00	0.00	0.00	0.00%
650.8040.5111.010	IPERS-NON UNION	0.00	1,331.00	0.00	0.00	0.00	0.00	0.00%
650.8040.5111.040	IPERS-PPME UNION	0.00	1,028.00	0.00	0.00	0.00	0.00	0.00%
650.8040.5121.010	GRP INSUR-NON UNION	0.00	3,075.00	0.00	0.00	0.00	0.00	0.00%
650.8040.5121.040	GRP INSUR-PPME UNION	0.00	3,077.00	0.00	0.00	0.00	0.00	0.00%
650.8040.5123.010	WORKCOMP-NON UNION	0.00	227.00	0.00	0.00	0.00	0.00	0.00%
650.8040.5123.040	WORKCOMP-PPME UNION	0.00	317.00	0.00	0.00	0.00	0.00	0.00%
650.8040.5342.000	CONTRACT-OUTSIDE HELP	0.00	80,000.00	0.00	0.00	0.00	0.00	0.00%
	Total Function: 8040 - URBAN TREES:	**0.00**	**120,959.00**	**0.00**	**0.00**	**0.00**	**0.00**	**0.00%**
	Total Fund: 650 - URBAN TREE FUND:	**0.00**	**120,959.00**	**0.00**	**0.00**	**0.00**	**0.00**	**0.00%**
Fund: 690 - TRANSIT OPERATING								
Function: 8050 - Transit								
690.8050.5010.010	REGULAR-NON UNION	406,095.37	428,143.00	260,437.63	435,889.00	443,838.00	7,949.00	1.82%
690.8050.5020.010	OVERTIME-NON UNION	31,248.39	20,000.00	26,219.86	44,000.00	20,000.00	-24,000.00	-54.55%
690.8050.5050.060	PART-TIME REGULAR	0.00	70,699.00	0.00	10,000.00	64,915.00	54,915.00	549.15%
690.8050.5060.010	TERM PAYOUTS-NON UNION	649.93	0.00	2,745.57	0.00	0.00	0.00	0.00%
690.8050.5061.010	RHSA PAYOUTS-NON UNION	0.00	8,500.00	14,175.00	14,175.00	0.00	-14,175.00	-100.00%
690.8050.5101.010	SOCIAL SECURITY-NON UNION	25,781.98	26,545.00	17,129.20	27,026.00	27,518.00	492.00	1.82%
690.8050.5101.060	SOCIAL SECURITY-PT REGULAR	0.00	4,383.00	0.00	620.00	4,025.00	3,405.00	549.19%
690.8050.5102.010	MEDICARE-NON UNION	6,029.54	6,208.00	4,006.05	6,320.00	6,436.00	116.00	1.84%
690.8050.5102.060	MEDICARE-PT REGULAR	0.00	1,025.00	0.00	145.00	941.00	796.00	548.97%
690.8050.5111.010	IPERS-NON UNION	41,285.38	40,417.00	26,296.83	40,384.00	41,898.00	1,514.00	3.75%
690.8050.5111.060	IPERS-PT REGULAR	0.00	6,674.00	0.00	944.00	6,128.00	5,184.00	549.15%
690.8050.5121.010	GRP INSUR-NON UNION	65,328.87	71,678.00	50,158.41	74,640.00	105,857.00	31,217.00	41.82%
690.8050.5122.000	RETIREES GRP HLTH INS	0.00	0.00	1,589.44	2,981.00	4,474.00	1,493.00	50.08%

Budget Comparison Report

Account Number		2021-2022 Total Activity	2022-2023 Total Budget	2022-2023 YTD Activity Through Feb	Parent Budget 2022-2023 FY2023 Amend	Comparison 1 Budget 2023-2024 FY2024 Dept Request	Comparison 1 to Parent Budget Increase / (Decrease)	%
690.8050.5123.010	WORKCOMP-NON UNION	8,097.12	15,329.00	10,629.46	15,339.00	15,931.00	592.00	3.86%
690.8050.5123.060	WORKCOMP-PT REGULAR	0.00	2,763.00	0.00	391.00	2,540.00	2,149.00	549.62%
690.8050.5132.000	CLOTHING EXPENSE	1,893.40	3,000.00	2,808.76	3,000.00	3,000.00	0.00	0.00%
690.8050.5151.000	PHYSICALS/IMMUNIZATIONS	0.00	500.00	179.00	500.00	500.00	0.00	0.00%
690.8050.5210.000	ADVERTISING & LEGAL PUB	3,674.30	4,000.00	1,693.80	4,000.00	4,000.00	0.00	0.00%
690.8050.5216.000	BACKGROUND CHECKS	0.00	200.00	15.00	200.00	200.00	0.00	0.00%
690.8050.5230.000	CONSULTING & PROF FEES	0.00	0.00	275.00	275.00	0.00	-275.00	-100.00%
690.8050.5232.000	AUDITING FEES	706.50	786.00	783.00	786.00	815.00	29.00	3.69%
690.8050.5234.000	LEGAL EXPENSES	480.00	0.00	775.50	1,000.00	500.00	-500.00	-50.00%
690.8050.5280.000	DUES, MEMBER, SUBSCRIPTN	2,825.00	3,000.00	3,192.00	3,000.00	3,000.00	0.00	0.00%
690.8050.5290.000	INSURANCE - GENERAL	18,921.75	20,201.00	0.00	22,234.00	26,681.00	4,447.00	20.00%
690.8050.5300.000	INSURANCE - TORT LIAB	3,640.35	4,089.00	0.00	3,921.00	4,705.00	784.00	19.99%
690.8050.5331.000	PAYMENTS-OTHER ENTITIES	19,880.60	35,000.00	37,859.95	50,000.00	100,000.00	50,000.00	100.00%
690.8050.5339.000	MEDICAL CLAIMS PAID BY CITY	601.12	500.00	0.00	500.00	500.00	0.00	0.00%
690.8050.5341.000	FLEXIBLE BENEFIT CLAIMS	583.40	0.00	0.00	0.00	0.00	0.00	0.00%
690.8050.5342.000	CONTRACT-OUTSIDE HELP	3,488.79	3,000.00	2,137.00	3,050.00	3,050.00	0.00	0.00%
690.8050.5344.000	CONTRACT-MAINTENANCE	828.70	500.00	599.66	1,000.00	1,000.00	0.00	0.00%
690.8050.5347.000	CONTRACT-CMPTR TECH SPPR	0.00	0.00	76.75	77.00	0.00	-77.00	-100.00%
690.8050.5359.000	TOWING SERVICES	800.00	500.00	0.00	500.00	500.00	0.00	0.00%
690.8050.5360.000	POSTAGE & SHIPPING	385.28	150.00	703.15	1,400.00	1,100.00	-300.00	-21.43%
690.8050.5370.000	PRINTING & BINDING	1,436.80	2,500.00	1,114.97	2,500.00	2,500.00	0.00	0.00%
690.8050.5380.000	RENTS & LEASES	100.00	0.00	845.00	1,400.00	1,500.00	100.00	7.14%
690.8050.5410.000	REPAIRS & MAINTENANCE	8,596.45	10,000.00	2,710.89	10,000.00	10,000.00	0.00	0.00%
690.8050.5450.000	TELEPHONE/OTHR COMMNCT	767.47	1,000.00	513.81	1,000.00	1,000.00	0.00	0.00%
690.8050.5460.000	CONFERENCE EXPENSE	0.00	1,500.00	0.00	1,500.00	1,500.00	0.00	0.00%
690.8050.5481.000	ELECTRICITY	7,437.28	8,000.00	5,555.58	9,000.00	9,000.00	0.00	0.00%
690.8050.5482.000	NATURAL GAS	4,898.67	6,500.00	3,655.38	6,500.00	6,500.00	0.00	0.00%
690.8050.5565.000	VEHICLE OPER/MAINT SPPLY	72,488.86	70,000.00	58,999.62	90,000.00	90,000.00	0.00	0.00%
690.8050.5570.000	VEHICLE GAS	7,408.01	7,000.00	5,624.28	9,000.00	9,000.00	0.00	0.00%
690.8050.5571.000	VEHICLE DIESEL FUEL	76,035.17	65,000.00	62,968.74	100,000.00	100,000.00	0.00	0.00%
690.8050.5600.000	OPERATING SUPPLIES	3,576.27	3,000.00	849.91	3,000.00	3,000.00	0.00	0.00%
690.8050.5605.000	OFFICE SUPPLIES	643.34	2,000.00	466.98	1,000.00	1,000.00	0.00	0.00%
690.8050.5611.000	BLDG,GRD OPER/MAINT SPLY	5,703.84	5,000.00	2,945.67	6,000.00	6,000.00	0.00	0.00%
690.8050.5612.000	COMPUTER COMPONENTS	86.97	0.00	0.00	0.00	0.00	0.00	0.00%
690.8050.5703.000	MINOR COMPUTER	1,488.17	1,500.00	0.00	1,500.00	1,500.00	0.00	0.00%
690.8050.5704.000	MINOR SOFTWARE <$5,000	274.40	750.00	0.00	750.00	750.00	0.00	0.00%
690.8050.5718.000	MINOR EQUIP, UNCLASSFIED	4,255.38	4,000.00	1,768.26	4,000.00	4,000.00	0.00	0.00%
690.8050.5750.000	OTHER CAP EQUIP > $5,000	0.00	15,000.00	7,000.00	86,800.00	28,000.00	-58,800.00	-67.74%

Budget Comparison Report

Account Number		2021-2022 Total Activity	2022-2023 Total Budget	2022-2023 YTD Activity Through Feb	Parent Budget 2022-2023 FY2023 Amend	Comparison 1 Budget 2023-2024 FY2024 Dept Request	Comparison 1 to Parent Budget Increase / (Decrease)	%
690.8050.5776.000	BUILDINGS & IMPROVEMENTS	0.00	0.00	0.00	0.00	25,000.00	25,000.00	0.00%
	Total Function: 8050 - Transit:	**838,422.85**	**980,540.00**	**619,505.11**	**1,102,247.00**	**1,194,302.00**	**92,055.00**	**8.35%**
	Total Fund: 690 - TRANSIT OPERATING:	**838,422.85**	**980,540.00**	**619,505.11**	**1,102,247.00**	**1,194,302.00**	**92,055.00**	**8.35%**
Fund: 740 - STORM SEWER UTILITY								
Function: 1040 - Flood Control								
740.1040.5233.000	ENGINEERING FEES	1,661.00	0.00	0.00	0.00	0.00	0.00	0.00%
	Total Function: 1040 - Flood Control:	**1,661.00**	**0.00**	**0.00**	**0.00**	**0.00**	**0.00**	**0.00%**
Function: 8065 - Storm Water								
740.8065.5010.010	REGULAR-NON UNION	155,637.80	214,626.00	141,993.96	216,637.00	224,681.00	8,044.00	3.71%
740.8065.5010.040	REGULAR-PPME UNION	105,524.38	116,327.00	76,440.18	118,327.00	102,174.00	-16,153.00	-13.65%
740.8065.5020.040	OVERTIME-PPME UNION	426.05	1,200.00	365.87	1,200.00	1,200.00	0.00	0.00%
740.8065.5030.070	PART-TIME TEMPORARY	0.00	8,000.00	0.00	2,000.00	8,000.00	6,000.00	300.00%
740.8065.5057.010	CAR REIMB-NON UNION	390.00	360.00	210.00	360.00	360.00	0.00	0.00%
740.8065.5060.010	TERM PAYOUTS-NON UNION	1,299.35	0.00	0.00	0.00	0.00	0.00	0.00%
740.8065.5060.040	TERM PAYOUTS-PPME UNION	1,186.51	0.00	187.85	0.00	0.00	0.00	0.00%
740.8065.5061.040	RHSA PAYOUT	0.00	0.00	0.00	0.00	0.00	0.00	0.00%
740.8065.5101.010	SOCIAL SECURITY-NON UNION	9,322.17	13,080.00	8,357.79	13,198.00	13,781.00	583.00	4.42%
740.8065.5101.040	SOCIAL SECURITY-PPME UNIO	6,352.98	7,212.00	4,608.89	7,336.00	6,335.00	-1,001.00	-13.65%
740.8065.5101.070	SOCIAL SECURITY-PT TEMP	0.00	496.00	0.00	124.00	496.00	372.00	300.00%
740.8065.5102.010	MEDICARE-NON UNION	2,230.68	3,117.00	2,011.80	3,146.00	3,263.00	117.00	3.72%
740.8065.5102.040	MEDICARE-PPME UNION	1,485.99	1,687.00	1,077.80	1,716.00	1,482.00	-234.00	-13.64%
740.8065.5102.070	MEDICARE-TEMPORARY	0.00	116.00	0.00	29.00	116.00	87.00	300.00%
740.8065.5111.010	IPERS-NON UNION	14,692.87	20,295.00	13,198.91	20,280.00	21,244.00	964.00	4.75%
740.8065.5111.040	IPERS-PPME UNION	10,001.31	10,981.00	6,248.94	10,981.00	9,645.00	-1,336.00	-12.17%
740.8065.5121.010	GRP INSUR-NON UNION	10,766.72	22,477.00	14,720.72	23,632.00	25,208.00	1,576.00	6.67%
740.8065.5121.040	GRP INSUR-PPME UNION	21,311.37	23,662.00	15,392.54	24,877.00	26,381.00	1,504.00	6.05%
740.8065.5122.000	RETIREES GRP HLTH INS	10,255.28	11,762.00	5,365.24	8,349.00	9,596.00	1,247.00	14.94%
740.8065.5123.010	WORKCOMP-NON UNION	2,407.47	4,778.00	3,515.49	4,783.00	5,004.00	221.00	4.62%
740.8065.5123.040	WORKCOMP-PPME UNION	2,333.77	2,439.00	2,730.10	2,442.00	2,145.00	-297.00	-12.16%
740.8065.5123.070	WORKCOMP-TEMPORARY	0.00	168.00	0.00	42.00	168.00	126.00	300.00%
740.8065.5132.000	CLOTHING EXPENSE	740.18	1,700.00	260.87	1,700.00	1,700.00	0.00	0.00%
740.8065.5151.000	PHYSICALS/IMMUNIZATIONS	155.60	250.00	167.18	250.00	250.00	0.00	0.00%
740.8065.5192.070	UNEMPLOYMENT-TEMPORAR	0.00	0.00	1,090.88	0.00	0.00	0.00	0.00%
740.8065.5210.000	ADVERTISING & LEGAL PUB	21.08	0.00	10.00	10.00	0.00	-10.00	-100.00%
740.8065.5215.000	BANK CHARGES	0.00	110.00	0.00	0.00	0.00	0.00	0.00%
740.8065.5216.000	BACKGROUND CHECKS	16.00	0.00	0.00	0.00	0.00	0.00	0.00%
740.8065.5220.000	COLLECTION COSTS/REFUNDS	5,956.15	5,500.00	3,008.05	5,500.00	5,500.00	0.00	0.00%
740.8065.5230.000	CONSULTING & PROF FEES	1,536.48	2,000.00	887.20	10,000.00	10,000.00	0.00	0.00%

Budget Comparison Report

Account Number		2021-2022 Total Activity	2022-2023 Total Budget	2022-2023 YTD Activity Through Feb	Parent Budget 2022-2023 FY2023 Amend	Comparison 1 Budget 2023-2024 FY2024 Dept Request	Comparison 1 to Parent Budget Increase / (Decrease)	%
740.8065.5231.000	ACCOUNTING FEES	10,500.00	18,256.00	12,170.64	18,256.00	19,100.00	844.00	4.62%
740.8065.5232.000	AUDITING FEES	3,297.00	3,668.00	3,654.00	3,654.00	3,801.00	147.00	4.02%
740.8065.5233.000	ENGINEERING FEES	44,881.34	50,000.00	2,001.15	2,100.00	55,000.00	52,900.00	2,519.05%
740.8065.5251.000	LICENSE & PERMITS	57.00	0.00	26.20	53.00	53.00	0.00	0.00%
740.8065.5280.000	DUES, MEMBER, SUBSCRIPTN	8,910.00	4,400.00	48.00	4,600.00	4,600.00	0.00	0.00%
740.8065.5290.000	INSURANCE - GENERAL	4,447.22	4,981.00	0.00	6,373.00	7,648.00	1,275.00	20.01%
740.8065.5300.000	INSURANCE - TORT LIAB	5,059.66	4,990.00	0.00	11,739.00	14,087.00	2,348.00	20.00%
740.8065.5331.000	PAYMENTS-OTHER ENTITIES	0.00	0.00	0.00	142,850.00	0.00	-142,850.00	-100.00%
740.8065.5339.000	MEDICAL CLAIMS PAID BY CITY	46.36	500.00	109.54	500.00	500.00	0.00	0.00%
740.8065.5342.000	CONTRACT-OUTSIDE HELP	1,194,846.50	142,000.00	12,105.90	142,000.00	92,000.00	-50,000.00	-35.21%
740.8065.5344.000	CONTRACT-MAINTENANCE	226.60	600.00	246.39	600.00	600.00	0.00	0.00%
740.8065.5347.000	CONTRACT-SOFTWARE MAINT	6,781.40	7,000.00	8,331.58	9,500.00	9,500.00	0.00	0.00%
740.8065.5360.000	POSTAGE & SHIPPING	55.00	0.00	0.00	0.00	0.00	0.00	0.00%
740.8065.5387.000	REPAIRS & MAINT LIFT	3,758.40	39,000.00	2,713.82	39,000.00	65,000.00	26,000.00	66.67%
740.8065.5410.000	REPAIRS & MAINTENANCE	1,896.81	2,000.00	94.24	2,000.00	2,000.00	0.00	0.00%
740.8065.5450.000	TELEPHONE/OTHR COMMNCT	3,325.91	3,500.00	2,358.00	3,500.00	3,500.00	0.00	0.00%
740.8065.5460.000	CONFERENCE EXPENSE	280.00	3,000.00	0.00	3,000.00	3,000.00	0.00	0.00%
740.8065.5481.000	ELECTRICITY	7,629.00	15,000.00	6,642.02	15,000.00	15,000.00	0.00	0.00%
740.8065.5565.000	VEHICLE OPER/MAINT SPPLY	3,476.47	6,000.00	1,640.55	6,000.00	6,000.00	0.00	0.00%
740.8065.5570.000	VEHICLE GAS	2,899.60	3,500.00	2,148.00	3,800.00	3,800.00	0.00	0.00%
740.8065.5571.000	VEHICLE DIESEL FUEL	843.72	2,500.00	1,766.82	3,500.00	3,500.00	0.00	0.00%
740.8065.5600.000	OPERATING SUPPLIES	19,226.07	20,000.00	11,189.50	20,000.00	20,000.00	0.00	0.00%
740.8065.5605.000	OFFICE SUPPLIES	112.36	100.00	0.00	100.00	100.00	0.00	0.00%
740.8065.5612.000	COMPUTER COMPONENTS	0.00	250.00	26.00	250.00	250.00	0.00	0.00%
740.8065.5614.000	LIFT STATION OPERATING SUP	2,761.05	3,000.00	373.23	3,000.00	3,000.00	0.00	0.00%
740.8065.5702.000	MINOR OFFICE FURN/EQUIP	0.00	500.00	0.00	500.00	500.00	0.00	0.00%
740.8065.5703.000	MINOR COMPUTER	0.00	1,000.00	0.00	2,600.00	3,000.00	400.00	15.38%
740.8065.5704.000	MINOR SOFTWARE <$5,000	0.00	600.00	0.00	600.00	600.00	0.00	0.00%
740.8065.5718.000	MINOR EQUIP, UNCLASSFIED	1,361.28	2,000.00	107.60	2,000.00	2,000.00	0.00	0.00%
740.8065.5719.000	MINOR EQUIP. LIFT STATIONS	0.00	1,800.00	0.00	1,800.00	1,800.00	0.00	0.00%
740.8065.5750.000	OTHER CAP EQUIP > $5,000	16,349.30	228,000.00	223,405.94	237,407.00	20,000.00	-217,407.00	-91.58%
740.8065.5765.000	LIFT STATIONS	0.00	70,000.00	0.00	0.00	116,000.00	116,000.00	0.00%
740.8065.5776.000	BUILDINGS & IMPROVEMENTS	0.00	0.00	305.83	2,000.00	2,000.00	0.00	0.00%
740.8065.5980.000	REFUNDS/REIMB	0.00	500.00	235.40	500.00	500.00	0.00	0.00%
	Total Function: 8065 - Storm Water:	**1,707,078.24**	**1,110,988.00**	**593,550.61**	**1,165,701.00**	**957,168.00**	**-208,533.00**	**-17.89%**
Function: 8067 - Storm Water-Dike								
740.8067.5010.090	REGULAR-P&R UNION	0.00	0.00	0.00	0.00	0.00	0.00	0.00%
740.8067.5030.070	PART-TIME TEMPORARY	0.00	6,000.00	0.00	2,000.00	6,000.00	4,000.00	200.00%
740.8067.5101.070	SOCIAL SECURITY-PT TEMP	0.00	372.00	0.00	124.00	372.00	248.00	200.00%

Account Number		2021-2022 Total Activity	2022-2023 Total Budget	2022-2023 YTD Activity Through Feb	Parent Budget 2022-2023 FY2023 Amend	Comparison 1 Budget 2023-2024 FY2024 Dept Request	Comparison 1 to Parent Budget Increase / (Decrease)	%
740.8067.5101.090	SOCIAL SECURITY-P&R UNION	0.00	0.00	0.00	0.00	0.00	0.00	0.00%
740.8067.5102.070	MEDICARE-TEMPORARY	0.00	87.00	0.00	29.00	87.00	58.00	200.00%
740.8067.5102.090	MEDICARE-P&R UNION	0.00	0.00	0.00	0.00	0.00	0.00	0.00%
740.8067.5111.090	IPERS-P&R UNION	0.00	0.00	0.00	0.00	0.00	0.00	0.00%
740.8067.5121.090	GRP INSUR-P&R UNION	0.00	0.00	0.00	0.00	0.00	0.00	0.00%
740.8067.5123.070	WORKCOMP-TEMPORARY	0.00	126.00	0.00	42.00	126.00	84.00	200.00%
740.8067.5123.090	WORKCOMP-P&R UNION	0.00	0.00	0.00	0.00	0.00	0.00	0.00%
740.8067.5300.000	INSURANCE - TORT LIAB	113.41	110.00	0.00	918.00	1,102.00	184.00	20.04%
740.8067.5342.000	CONTRACT-OUTSIDE HELP	229,998.50	8,000.00	14,467.96	14,468.00	0.00	-14,468.00	-100.00%
740.8067.5386.000	CONTRACT LAWN CARE	2,510.00	2,500.00	2,300.00	3,000.00	3,000.00	0.00	0.00%
740.8067.5410.000	REPAIRS & MAINTENANCE	0.00	1,500.00	0.00	1,500.00	1,500.00	0.00	0.00%
740.8067.5562.000	GROUNDS EQUIP MAINT SPLY	0.00	2,750.00	0.00	2,750.00	2,750.00	0.00	0.00%
740.8067.5570.000	VEHICLE GAS	0.00	750.00	0.00	750.00	750.00	0.00	0.00%
740.8067.5571.000	VEHICLE DIESEL FUEL	701.10	1,500.00	982.34	1,500.00	1,500.00	0.00	0.00%
740.8067.5600.000	OPERATING SUPPLIES	0.00	1,500.00	262.67	1,500.00	1,500.00	0.00	0.00%
	Total Function: 8067 - Storm Water-Dike:	**233,323.01**	**25,195.00**	**18,012.97**	**28,581.00**	**18,687.00**	**-9,894.00**	**-34.62%**
Function: 9000 - 9000								
740.9000.7500.132	TRANSFER OUT - FUND 132 GF	54,617.00	0.00	0.00	0.00	0.00	0.00	0.00%
740.9000.7500.200	TRANSFER OUT - DEBT SERVIC	549,056.00	527,606.00	0.00	527,606.00	541,506.00	13,900.00	2.63%
740.9000.7500.363	TRANSFER OUT - FUND 363	0.00	77,326.00	0.00	0.00	0.00	0.00	0.00%
740.9000.7500.381	TRANSFER OUT - FUND 381	0.00	0.00	0.00	0.00	0.00	0.00	0.00%
740.9000.7500.395	TRANSFER OUT - FUND 395	0.00	236,405.00	0.00	236,405.00	0.00	-236,405.00	-100.00%
	Total Function: 9000 - 9000:	**603,673.00**	**841,337.00**	**0.00**	**764,011.00**	**541,506.00**	**-222,505.00**	**-29.12%**
	Total Fund: 740 - STORM SEWER UTILITY:	**2,545,735.25**	**1,977,520.00**	**611,563.58**	**1,958,293.00**	**1,517,361.00**	**-440,932.00**	**-22.52%**
Fund: 741 - 2016 GO STORM WATER PROJ								
Function: 8065 - Storm Water								
741.8065.5251.000	LICENSE & PERMITS	180.00	0.00	0.00	0.00	0.00	0.00	0.00%
741.8065.5342.000	CONTRACT-OUTSIDE HELP	1,684,931.21	0.00	753,578.95	995,108.00	0.00	-995,108.00	-100.00%
	Total Function: 8065 - Storm Water:	**1,685,111.21**	**0.00**	**753,578.95**	**995,108.00**	**0.00**	**-995,108.00**	**-100.00%**
Function: 9000 - 9000								
741.9000.7500.200	TRANSFER OUT - DEBT SERVIC	0.00	0.00	0.00	0.00	0.00	0.00	0.00%
	Total Function: 9000 - 9000:	**0.00**	**0.00**	**0.00**	**0.00**	**0.00**	**0.00**	**0.00%**
	Total Fund: 741 - 2016 GO STORM WATER PROJ:	**1,685,111.21**	**0.00**	**753,578.95**	**995,108.00**	**0.00**	**-995,108.00**	**-100.00%**
Fund: 750 - COMPOSTING FACILITY								
Function: 8070 - Compost								
750.8070.5010.040	REGULAR-PPME UNION	7,826.54	10,000.00	4,256.04	10,000.00	10,000.00	0.00	0.00%
750.8070.5030.070	PART-TIME TEMPORARY	21,401.38	18,462.00	13,737.00	16,817.00	9,460.00	-7,357.00	-43.75%

Budget Comparison Report

Account Number		2021-2022 Total Activity	2022-2023 Total Budget	2022-2023 YTD Activity Through Feb	Parent Budget 2022-2023 FY2023 Amend	Comparison 1 Budget 2023-2024 FY2024 Dept Request	Comparison 1 to Parent Budget Increase / (Decrease)	%
750.8070.5101.040	SOCIAL SECURITY-PPME UNIO	461.13	620.00	247.07	620.00	620.00	0.00	0.00%
750.8070.5101.070	SOCIAL SECURITY-PT TEMP	1,326.89	1,145.00	851.70	1,043.00	587.00	-456.00	-43.72%
750.8070.5102.040	MEDICARE-PPME UNION	107.86	145.00	57.80	145.00	145.00	0.00	0.00%
750.8070.5102.070	MEDICARE-TEMPORARY	310.37	268.00	199.23	244.00	137.00	-107.00	-43.85%
750.8070.5111.040	IPERS-PPME UNION	738.83	944.00	401.77	944.00	944.00	0.00	0.00%
750.8070.5121.040	GRP INSUR-PPME UNION	1,270.57	2,712.00	826.23	2,852.00	3,407.00	555.00	19.46%
750.8070.5123.040	WORKCOMP-PPME UNION	255.96	588.00	250.34	588.00	588.00	0.00	0.00%
750.8070.5123.070	WORKCOMP-TEMPORARY	235.87	362.00	269.33	330.00	185.00	-145.00	-43.94%
750.8070.5192.070	UNEMPLOYMENT-POLICE UNI	1,202.30	0.00	0.00	0.00	0.00	0.00	0.00%
750.8070.5210.000	ADVERTISING & LEGAL PUB	0.00	250.00	84.08	250.00	250.00	0.00	0.00%
750.8070.5216.000	BACKGROUND CHECKS	90.00	75.00	45.00	75.00	75.00	0.00	0.00%
750.8070.5290.000	INSURANCE - GENERAL	23.95	26.00	0.00	32.00	38.00	6.00	18.75%
750.8070.5300.000	INSURANCE - TORT LIAB	225.38	501.00	0.00	363.00	436.00	73.00	20.11%
750.8070.5342.000	CONTRACT-OUTSIDE HELP	25,250.00	30,000.00	350.00	60,000.00	60,000.00	0.00	0.00%
750.8070.5344.000	CONTRACT-MAINTENANCE	434.00	0.00	384.00	600.00	600.00	0.00	0.00%
750.8070.5347.000	CONTRACT-SOFTWARE MAINT	0.00	0.00	0.00	0.00	0.00	0.00	0.00%
750.8070.5360.000	POSTAGE & SHIPPING	24.92	0.00	0.00	0.00	0.00	0.00	0.00%
750.8070.5410.000	REPAIRS & MAINTENANCE	152.25	200.00	465.70	271.00	200.00	-71.00	-26.20%
750.8070.5450.000	TELEPHONE/OTHR COMMNCT	455.18	450.00	257.12	450.00	450.00	0.00	0.00%
750.8070.5481.000	ELECTRICITY	1,237.18	800.00	897.56	1,400.00	1,400.00	0.00	0.00%
750.8070.5565.000	VEHICLE OPER/MAINT SPPLY	113.48	0.00	0.00	0.00	0.00	0.00	0.00%
750.8070.5600.000	OPERATING SUPPLIES	720.00	250.00	53.56	250.00	250.00	0.00	0.00%
750.8070.5605.000	OFFICE SUPPLIES	104.56	1,000.00	0.00	300.00	300.00	0.00	0.00%
750.8070.5611.000	BLD.GRD, OPER SUPPLIES	0.00	0.00	63.38	65.00	0.00	-65.00	-100.00%
750.8070.5702.000	MINOR OFFICE FURN/EQUIP	79.99	0.00	0.00	0.00	0.00	0.00	0.00%
750.8070.5718.000	MINOR EQUIPMENT	3,664.50	0.00	0.00	0.00	0.00	0.00	0.00%
750.8070.5750.000	OTHER CAP EQUIP > $5,000	0.00	0.00	0.00	90,000.00	0.00	-90,000.00	-100.00%
750.8070.5980.000	REFUNDS/REIMB	75.00	0.00	-18.29	18.00	0.00	-18.00	-100.00%
750.8070.5990.000	CASH SHORT & (OVER)	-48.31	0.00	-128.00	0.00	0.00	0.00	0.00%
	Total Function: 8070 - Compost:	**67,739.78**	**68,798.00**	**23,550.62**	**187,657.00**	**90,072.00**	**-97,585.00**	**-52.00%**
	Total Fund: 750 - COMPOSTING FACILITY:	**67,739.78**	**68,798.00**	**23,550.62**	**187,657.00**	**90,072.00**	**-97,585.00**	**-52.00%**
Fund: 760 - P&R CONCESSIONS ENTERPRISE								
Function: 8080 - P&R Concessions								
760.8080.5030.070	PART-TIME TEMPORARY	15,071.31	20,000.00	8,589.60	15,000.00	15,000.00	0.00	0.00%
760.8080.5101.070	SOCIAL SECURITY-PT TEMP	934.28	1,240.00	532.49	930.00	930.00	0.00	0.00%
760.8080.5102.070	MEDICARE-TEMPORARY	218.35	290.00	124.46	218.00	218.00	0.00	0.00%
760.8080.5111.070	IPERS-PT TEMP	591.62	0.00	0.00	0.00	0.00	0.00	0.00%
760.8080.5123.070	WORKCOMP-TEMPORARY	238.21	396.00	212.59	371.00	371.00	0.00	0.00%
760.8080.5216.000	BACKGROUND CHECKS	0.00	250.00	0.00	250.00	250.00	0.00	0.00%

Budget Comparison Report

Account Number		2021-2022 Total Activity	2022-2023 Total Budget	2022-2023 YTD Activity Through Feb	Parent Budget 2022-2023 FY2023 Amend	Comparison 1 Budget 2023-2024 FY2024 Dept Request	Comparison 1 to Parent Budget Increase / (Decrease)	%
760.8080.5251.000	LICENSE & PERMITS	150.00	115.00	0.00	115.00	115.00	0.00	0.00%
760.8080.5280.000	DUES, MEMBER, SUBSCRIPTN	100.00	45.00	60.00	45.00	45.00	0.00	0.00%
760.8080.5290.000	INSURANCE - GENERAL	248.87	276.00	0.00	330.00	396.00	66.00	20.00%
760.8080.5300.000	INSURANCE - TORT LIAB	224.21	291.00	0.00	259.00	311.00	52.00	20.08%
760.8080.5342.000	CONTRACT-OUTSIDE HELP	0.00	200.00	0.00	200.00	200.00	0.00	0.00%
760.8080.5360.000	POSTAGE & SHIPPING	0.00	25.00	0.00	25.00	25.00	0.00	0.00%
760.8080.5370.000	PRINTING & BINDING	0.00	30.00	0.00	30.00	30.00	0.00	0.00%
760.8080.5410.000	REPAIRS & MAINTENANCE	0.00	800.00	0.00	800.00	800.00	0.00	0.00%
760.8080.5600.000	OPERATING SUPPLIES	278.06	500.00	761.12	500.00	500.00	0.00	0.00%
760.8080.5605.000	OFFICE SUPPLIES	0.00	100.00	0.00	100.00	100.00	0.00	0.00%
760.8080.5608.000	RESALE SUPPLIES	23,995.85	20,000.00	18,997.60	22,000.00	20,000.00	-2,000.00	-9.09%
760.8080.5613.000	MERCHANDISE FOR RESALE	0.00	0.00	16.83	0.00	0.00	0.00	0.00%
760.8080.5718.000	MINOR EQUIP, UNCLASSFIED	958.99	1,000.00	0.00	1,000.00	1,000.00	0.00	0.00%
760.8080.5990.000	CASH SHORT & (OVER)	40.36	0.00	0.09	0.00	0.00	0.00	0.00%
	Total Function: 8080 - P&R Concessions:	**43,050.11**	**45,558.00**	**29,294.78**	**42,173.00**	**40,291.00**	**-1,882.00**	**-4.46%**
	Total Fund: 760 - P&R CONCESSIONS ENTERPRISE:	**43,050.11**	**45,558.00**	**29,294.78**	**42,173.00**	**40,291.00**	**-1,882.00**	**-4.46%**
	Report Total:	**71,076,443.58**	**113,118,167.23**	**37,513,493.22**	**99,577,662.00**	**106,622,174.00**	**7,044,512.00**	**7.07%**

Fund Summary

Fund	2021-2022 Total Activity	2022-2023 Total Budget	2022-2023 YTD Activity Through Feb	Parent Budget 2022-2023 FY2023 Amend	Comparison 1 Budget 2023-2024 FY2024 Dept Request	Comparison 1 to Parent Budget Increase / (Decrease)	%
001 - GENERAL FUND	16,186,589.19	17,225,737.23	10,755,198.67	17,657,520.00	18,020,483.00	362,963.00	2.06%
030 - CAPITAL RESERVE	438,419.86	796,599.00	428,451.51	897,295.00	696,423.00	-200,872.00	-22.39%
031 - CAPITAL RSRV-BLDG MAINT	84,375.81	58,750.00	17,205.36	19,858.00	141,275.00	121,417.00	611.43%
032 - CIP LARGE VEHICLE/EQUIPMENT	7,117.22	0.00	0.00	0.00	0.00	0.00	0.00%
110 - ROAD USE TAX	3,114,180.77	5,028,771.00	2,142,602.01	4,052,111.00	4,198,134.00	146,023.00	3.60%
112 - EMPLOYEE BENEFITS FUND	2,608,912.25	2,935,235.00	1,323,503.77	2,898,190.00	3,070,871.00	172,681.00	5.96%
117 - POLICE/FIRE RETIREMENT	1,244,695.57	1,211,048.00	560,984.78	1,151,802.00	1,180,148.00	28,346.00	2.46%
119 - EMERGENCY FUND	251,339.05	255,879.00	131,473.54	255,908.00	262,974.00	7,066.00	2.76%
121 - LOCAL OPTION SALES TAX	3,793,366.91	5,023,547.00	1,824,058.20	7,178,825.00	4,565,385.00	-2,613,440.00	-36.40%
125 - TAX INCREMENT FINANCING	770,990.78	761,198.00	187,060.25	974,271.00	1,082,464.00	108,193.00	11.11%
126 - TIF-LMI	27,958.10	0.00	0.00	0.00	0.00	0.00	0.00%
130 - CITY TORT LIABILITY	901,319.81	40,000.00	145,259.20	272,253.00	40,000.00	-232,253.00	-85.31%
132 - GRANTS-STATE/LOCAL AGENCIES	937,749.44	3,796,822.00	592,034.18	1,593,141.00	2,453,883.00	860,742.00	54.03%
133 - UNDESIGNATED FEDERAL GRANTS	27,785.30	182,000.00	92,530.01	141,084.00	385,550.00	244,466.00	173.28%
140 - PARK & REC DONATION FUND	25,604.89	54,900.00	34,198.46	92,765.00	137,175.00	44,410.00	47.87%
142 - SOFTBALL ASSOCIATION FUND	27,914.69	30,780.00	17,566.46	32,381.00	30,781.00	-1,600.00	-4.94%
144 - LIVE HEALTHY IOWA	0.00	7,547.00	0.00	7,547.00	7,547.00	0.00	0.00%
145 - TORNADO GENERAL	0.00	0.00	7,450.00	7,450.00	181,000.00	173,550.00	2,329.53%
148 - FEMA-COVID19	11,354.94	0.00	4,366.73	5,500.00	0.00	-5,500.00	-100.00%
149 - FEMA - WINDS	361,833.01	0.00	93,252.66	107,398.00	8,208.00	-99,190.00	-92.36%
150 - LOCAL PD GRANTS	44,035.21	55,715.00	43,682.15	51,405.00	60,000.00	8,595.00	16.72%
151 - DEPT OF JUSTICE GRANTS	54,757.65	123,520.00	76,400.43	126,130.00	56,800.00	-69,330.00	-54.97%
152 - POLICE UNDESIGNATED GRANTS	121,845.08	109,507.00	68,924.77	106,329.00	109,507.00	3,178.00	2.99%
153 - POLICE DEPT DONATION FUND	32,603.31	28,450.00	5,089.01	32,780.00	30,850.00	-1,930.00	-5.89%
156 - FIRE DEPT DONATION FUND	40,845.62	7,000.00	22,410.72	29,500.00	17,000.00	-12,500.00	-42.37%
157 - FIRE DEPT GRANTS	4,967.19	0.00	0.00	0.00	0.00	0.00	0.00%
170 - LIBRARY DONATION FUND	19,838.47	150,487.00	14,868.20	177,687.00	834,740.00	657,053.00	369.78%
177 - SEIZED ASSETS (POLICE)	17,604.93	4,000.00	2,302.59	4,000.00	4,000.00	0.00	0.00%
179 - OTHER COMM AND ECON DEVELOP	79,839.36	0.00	0.00	0.00	0.00	0.00	0.00%
180 - HOUSING GRANTS	28,073.24	0.00	0.00	0.00	0.00	0.00	0.00%
184 - VOUCHERS - 002, 003	1,229,524.10	1,223,256.00	831,781.78	1,247,533.00	1,284,128.00	36,595.00	2.93%
189 - #6 HUD LEAD GRANT	611,572.00	1,605,324.00	585,583.00	1,671,356.00	1,583,162.00	-88,194.00	-5.28%
200 - GO BONDS DEBT FUND	5,287,543.00	5,846,502.00	589,303.62	5,846,502.00	7,031,413.00	1,184,911.00	20.27%
300 - CIP COLLECTION FUND	547,938.17	796,599.00	319,252.34	984,444.00	790,509.00	-193,935.00	-19.70%
310 - FEDERAL STREET GRANTS	40,062.00	0.00	0.00	0.00	0.00	0.00	0.00%
311 - RISE STREET GRANTS	248,836.75	4,411,311.00	4,022,958.25	6,474,890.00	25,000.00	-6,449,890.00	-99.61%
312 - AIRPORT PROJECT FUND	2,450,081.87	0.00	358,170.88	594,963.00	141,500.00	-453,463.00	-76.22%
340 - BIKE PATH PROJECT FUND	77,166.16	602,540.00	56,162.28	63,402.00	1,637,540.00	1,574,138.00	2,482.79%

Budget Comparison Report

Fund	2021-2022 Total Activity	2022-2023 Total Budget	2022-2023 YTD Activity Through Feb	Parent Budget 2022-2023 FY2023 Amend	Comparison 1 Budget 2023-2024 FY2024 Dept Request	Comparison 1 to Parent Budget Increase / (Decrease)	%
341 - TREES FOREVER PROJECT	20,971.39	20,000.00	34,645.00	40,000.00	40,000.00	0.00	0.00%
350 - GO BONDS CAPITAL PROJECTS	0.00	0.00	0.00	0.00	0.00	0.00	0.00%
354 - POLICE & FIRE STATIONS	609,099.31	0.00	741.00	741.00	0.00	-741.00	-100.00%
355 - 2015 GO BONDS (D&D)	906,564.79	768,600.00	566,328.17	840,221.00	289,365.00	-550,856.00	-65.56%
360 - 2019 GO BONDS & PROJECTS	1,873,384.34	894,300.00	1,361,494.14	1,362,659.00	0.00	-1,362,659.00	-100.00%
362 - 2020 GO BONDS	820,431.21	927,473.00	24,551.27	150,000.00	1,220,553.00	1,070,553.00	713.70%
363 - 2021 GO BONDS	1,723,392.43	7,328,513.00	516,721.95	3,681,181.00	10,798,365.00	7,117,184.00	193.34%
364 - 2022 GO BONDS	0.00	10,000,000.00	124,865.50	6,387,344.00	4,332,250.00	-2,055,094.00	-32.17%
365 - 2023 GO BONDS	0.00	0.00	0.00	0.00	11,356,000.00	11,356,000.00	0.00%
381 - 2019 CY STREET,SIDEWALK,PARKING	1,137,426.40	0.00	0.00	0.00	0.00	0.00	0.00%
383 - COLISEUM REMODEL	32,312.19	0.00	0.00	0.00	0.00	0.00	0.00%
389 - AMERICAN RESCUE PLAN	187,901.62	3,138,147.00	36,641.70	953,545.00	2,632,863.00	1,679,318.00	176.11%
395 - ECONOMIC DEVELOPMENT PROJEC	1,314,831.03	1,365,270.00	932,504.54	1,363,896.00	7,000.00	-1,356,896.00	-99.49%
610 - WATER POLLUTION CONTROL	7,009,676.56	11,949,972.00	2,781,989.69	6,776,808.00	7,964,951.00	1,188,143.00	17.53%
611 - WPCP REVENUE	7,424,654.19	12,753,333.00	3,048,924.98	6,886,376.00	9,128,351.00	2,241,975.00	32.56%
612 - WPCP REVENUE BOND FUND	661,065.10	0.00	0.00	0.00	0.00	0.00	0.00%
615 - WPCP PLANT & IMPROVEMENTS	413,132.12	8,406,160.00	500,652.16	7,544,938.00	5,242,550.00	-2,302,388.00	-30.52%
616 - SANITARY SEWER REHAB PROJECT	0.00	0.00	191,854.27	4,548,255.00	699,450.00	-3,848,805.00	-84.62%
617 - SANITARY SEWER NEW CONSTRUCT	2,900.00	0.00	0.00	0.00	0.00	0.00	0.00%
650 - URBAN TREE FUND	0.00	120,959.00	0.00	0.00	0.00	0.00	0.00%
690 - TRANSIT OPERATING	838,422.85	980,540.00	619,505.11	1,102,247.00	1,194,302.00	92,055.00	8.35%
740 - STORM SEWER UTILITY	2,545,735.25	1,977,520.00	611,563.58	1,958,293.00	1,517,361.00	-440,932.00	-22.52%
741 - 2016 GO STORM WATER PROJ	1,685,111.21	0.00	753,578.95	995,108.00	0.00	-995,108.00	-100.00%
750 - COMPOSTING FACILITY	67,739.78	68,798.00	23,550.62	187,657.00	90,072.00	-97,585.00	-52.00%
760 - P&R CONCESSIONS ENTERPRISE	43,050.11	45,558.00	29,294.78	42,173.00	40,291.00	-1,882.00	-4.46%
Report Total:	**71,076,443.58**	**113,118,167.23**	**37,513,493.22**	**99,577,662.00**	**106,622,174.00**	**7,044,512.00**	**7.07%**

Intrafund transfers not included in budget	-11,360,021	-9,111,901
Marshalltown Water Works	5,774,039	6,695,499
TOTAL BUDGET	93,991,680	104,205,772

NORTH TAMA TELEGRAPH

SUN COURIER

Tama-Toledo News Chronicle

Times-Republican

Affidavit of Publication

STATE OF IOWA, Marshall County, ss.

I, Leanne Darr being duly sworn, do depose and say that I am clerk of the Times Republican/Sun Courier/Tama-Toledo & North Tama, Newspapers of general circulation published at Marshalltown, Iowa, in said county of Marshall, that the notice hereto attached was published in said newspaper on 2-10-23 and that the charge for the same was $ 108.72 Dollars Onehundredeight dollars .72/100

Sworn and subscribed to by Leanne Darr

before me this 10 day of February, 2023.

Annette Mackay

Notary Public for Marshall County, Iowa.

NOTARIAL SEAL IOWA

ANNETTE MACKAY
Commission Number 830781
My Commission Expires
3-17-2024

NOTICE OF PUBLIC HEARING
Budget Estimate

Form Util Bud

Marshalltown Water Works
(Name of Enterprise)

The Marshalltown Water Works Board of Trustees (Governing Board) will conduct a public hearing on the proposed Fiscal (specify fiscal or calendar) year 2024 (xxxx/xxxx) budget at 205 E State Street, Marshalltown IA 50158 on 2/21/23 (mm/dd/yy), beginning at 12:00 (xx:xx) o'clock. noon (AM/PM) The Budget Estimate Summary of proposed revenues and expenditures is shown below. Copies of the *detailed* proposed budget may be obtained or viewed at the office of the City Clerk or Utility Finance Officer and at the city library. At the public hearing, any resident or taxpayer may present objections to, or arguments in favor of, any part of the proposed budget.

2-6-23 (date) Marcia Lovell (signature) Secretary

(specify budget years)	Budget 2024 (xxxx)	Re-estimated 2023 (xxxx)	Actual 2022 (xxxx)
Revenues & Other Financing Sources			
Use of money and property	34,000	34,000	414,868
Charges for services	7,868,778	7,287,409	6,963,819
Miscellaneous	30,000	30,000	43,642
Other Financing Sources	0	0	0
Total Revenues & Financing Sources	7,932,778	7,351,409	7,422,329
Expenditures & Transfers Out			
Expenditures	6,695,499	5,774,039	4,419,621
Transfers Out	0	0	0
Total Expenditures & Transfers Out	6,695,499	5,774,039	4,419,621
Excess of Revenues & Other Sources (+) (-) Expenditures & Transfers Out	1,237,279	1,577,370	3,002,708
Beginning Fund Balance July 1 (month)	22,605,599	21,028,229	18,025,521
Ending Fund Balance June 30 (month)	23,842,878	22,605,599	21,028,229

ADOPTED BUDGET SUMMARY

FISCAL YEAR 2024
(specify fiscal or calendar year budget)

Marshalltown Water Works
NAME OF ENTERPRISE

	(specify budget years)		Budget 2024		Re-Estimated 2023		Actual 2022
REVENUES & OTHER FINANCING SOURCES							
Use of Money and Property	(line 398)	241	34,000	271	34,000	301	414,868
Charges for Services	(line 414)	243	7,868,778	273	7,287,409	303	6,963,819
Miscellaneous	(line 416)	245	30,000	275	30,000	305	43,642
Operating Transfers In	(line 417)	247	0	277	0	307	0
Proceeds of Long Term Debt	(line 418)	248	0	278	0	308	0
Proceeds of Fixed Asset Sales	(line 419)	249	0	279	0	309	0
Total Revenues & Other Financing Sources		250	7,932,778	280	7,351,409	310	7,422,329
EXPENDITURES & TRANSFERS OUT							
Expenditures	(line 386)	255	6,695,499	285	5,774,039	315	4,419,621
Transfers Out	(line 387)	259	0	289	0	319	0
Total Expenditures & Transfers Out		260	6,695,499	290	5,774,039	320	4,419,621
Excess of Revenues & Other Sources Over (Under) Expenditures & Transfers Out		261	1,237,279	291	1,577,370	321	3,002,708
BEGINNING Fund Balance	(line 390)	262	22,605,599	292	21,028,229	322	18,025,521
ENDING Fund Balance	(line 388)	263	23,842,878	293	22,605,599	323	21,028,229

Marshalltown Water Works
NAME OF ENTERPRISE

REVENUES DETAIL

(specify budget years)			Budget 2024	Re-Estimated 2023	Fiscal (specify if budget is fiscal or calendar year) Actual 2022
Beginning Fund Balance		390	22,605,599	21,028,229	18,025,521
Use of Money & Property		398	34,000	34,000	414,868
Charges for Services:	Hospital	411			
	Water	404	7,868,778	7,287,409	6,963,819
	Sewer	405			
	Electric	406			
	Gas	407			
	Telecommunications	408			
Total Charges for Services		414	7,868,778	7,287,409	6,963,819
Miscellaneous		416	30,000	30,000	43,642
Other Financing Sources:					
Operating Transfers In		417			
Proceeds of Long Term Debt		418			
Proceeds of Fixed Asset Sales		419			
Total Revenues - All Sources		421	30,538,377	28,379,638	25,447,850

EXPENDITURES DETAIL

(specify budget years)			Budget 2024	Re-Estimated 2023	Actual 2022
Expenditures:					
	Hospital	338			
	Water	360	6,695,499	5,774,039	4,419,621
	Sewer	357			
	Electric	361			
	Gas	362			
	Telecommunications	363			
Total Expenditures:		386	6,695,499	5,774,039	4,419,621
Transfers Out		387			
Ending Fund Balance		388	23,842,878	22,605,599	21,028,229
Total Expenditures & Transfers Out		389	30,538,377	28,379,638	25,447,850

ADOPTED BUDGET CERTIFICATE

To: Marshalltown City Council

At a meeting of the Marshalltown Water Works Board of Trustees, held after public hearing as required by law, on February 21, 2023, the proposed budget for Fiscal Year 2024 was adopted as summarized and attached hereto.

Telephone Area Code (641) 753-7913

Board Secretary
(signature)

Address 205 East State Street - P.O. Box 1420
Marshalltown, IA 50158

Record of Public Hearing and Adoption of Budget:

On February 21, 2023, the Marshalltown Water Works Board of Trustees met for the purpose of conducting a public hearing on the proposed Fiscal Year 2024 budget as published. Notice of time and place of hearing had been published on February 10, 2023, in the Marshalltown Times Republican and the affidavit of publication was available to file with the City Council.

The budget estimate was considered and taxpayers and residents heard for and against said estimate were as follows:

After giving opportunity for all desiring to be heard, the Board adopted the following budget resolution:

A RESOLUTION ADOPTING THE BUDGET FOR FISCAL YEAR ENDING JUNE 30, 2024

BE IT RESOLVED by the Marshalltown Water Works Board of Trustees: The budget for Fiscal year ending June 30, 2024, as set forth in the Adopted Budget Summary and in the detailed budget in support thereof showing the estimated revenues and expenditures for said budget year is adopted, and the Secretary is directed to make the filing required by law and to set up the books in accordance with the summary and detail as adopted.

Passed and approved on February 15, 2023, by the following vote:

AYES: Laura Eilers, Tom Mack, Nick Honey

NAYS:

Chairperson
(signature)

Secretary
(signature)

2023-0

RESOLUTION PROVIDING FOR THE CONVEYANCE AND TRANSFER OF TITLE OF CITY OWNED LAND TO CYNTHIA LEWIS, 1021 SOUTH 5TH AVENUE

WHEREAS, the Council of the City of Marshalltown, Iowa finds it is in the best interest of the City and proposes to convey and transfer by Quit Claim Deed, property set out and described in Section 1 hereof to Cynthia Lynn Lewis; and

WHEREAS, the consideration for the transfer of the real estate to Cynthia Lynn Lewis, as set forth in Section 1, is the full sum of $500 (Five Hundred and 00/100) Dollars, said sum payable to the City of Marshalltown; and

WHEREAS, the property being transferred by the City of Marshalltown, Iowa to Cynthia Lynn Lewis is real estate which is not being used to the full advantage of the City, and is not required for any other public purpose, and no rights of private persons will be adversely affected; and

WHEREAS, the City of Marshalltown hereby proposes the transfer of said property, subject to easements being retained and rights of way of utilities, and access to and maintenance of said utilities. Said easements, rights of way and access will be retained until such time as the utility no longer utilizes or needs facilities in this location; and

WHEREAS, a notice of public hearing has been published according to law notifying the public of the proposed conveyance and transfer of title, and said public hearing was held.

NOW, THEREFORE, BE IT RESOLVED BY THE COUNCIL OF THE CITY OF MARSHALLTOWN, IOWA:

Section 1. The City of Marshalltown, Iowa, by this resolution, approve the conveyance and transfer of title by Quit Claim Deed to Cynthia Lynn Lewis of the property:

PARCEL LOCATED ENTIRELY WITHIN A PART OF LOT 1 OF LOT 1 OF THE SUBDIVISION OF THE SOUTHEAST 1/4 OF THE SOUTHEAST 1/4, SECTION 35, TOWNSHIP 84 NORTH, RANGE 18 WEST OF THE 5TH P.M., CITY OF MARSHALL TOWN, MARSHALL COUNTY, IOWA, MORE PARTICULARLY DESCRIBED AS FOLLOWS: BEGINNING AT THE NORTHWEST CORNER OF LOT 2 OF THE SUBDIVISION OF THE SOUTHEAST 1/4 OF THE SOUTHEAST 1/4 OF SAID SECTION 35; THENCE NORTH 1 °05'50" WEST, 34.50 FEET; THENCE NORTH 88°56'16" EAST, 265.05 FEET TO A POINT ON THE WEST RIGHT OF LINE OF SOUTH 5TH AVENUE; THENCE SOUTH 1°05'03" EAST, 34.50 FEET ALONG SAID WEST RIGHT OF WAY LINE TO THE NORTHEAST CORNER OF SAID LOT 2; THENCE SOUTH 88°56'16" WEST, 265.05 FEET ALONG THE NORTH LINE OF SAID LOT 2 TO THE POINT OF BEGINNING, CONTAINING 0.21 ACRES TOTAL. SUBJECT TO EASEMENTS AND RESTRICTIONS OF RECORD, IF ANY. From the City of Marshalltown to Cynthia Lynn Lewis. The consideration for such conveyance shall be the sum of $500 (Five Hundred and

00/100).

Section 2. The City of Marshalltown hereby approves the transfer of said property, subject to easements being retained and rights of way of utilities, and access to and maintenance of said utilities. Said easements, rights of way and access will be retained until such time as the utility no longer utilizes or needs facilities in this location.

Passed this 10th day of April 2023, and signed this _____ day of April 2023.

CITY OF MARSHALLTOWN, IOWA

_____

Joel T.S. Greer, Mayor

ATTEST:

_____

Alicia Hunter, City Clerk

MARSHALLTOWN
IOWA

Joel Greer, Mayor
Jessica Kinser, City Administrator
24 North Center Street
Marshalltown, IA 50158
PH 641.754.5701 | FX 641.754.5717

TO: Mayor Greer and the City Council
FROM: Jessica Kinser
DATE: March 20, 2023
RE: Property Sale to Cynthia Lewis 1021 S. 5th Ave

Strategic Plan:

☐ Strategy 1: Expand and improve development in the community.
☐ Strategy 2: Enhance Marshalltown's public image.
☒ Strategy 3: Continually improve and sustain the City's infrastructure, organization, and services.
☐ Strategy 4: Partner with citizens, for-profit, non-profit, and others to improve quality of life.

Plan Objective:

Recommendation: To approve the resolution as proposed

Budget Impact: Sale is for $500; cost of survey is $945

Description/Background: Cynthia Lewis, owner of 1021 South 5th Avenue, requested to purchase a portion of the City-owned parcel adjacent to the property that is a portion of the Anson Park ball field. Ms. Lewis is offering to pay $500 for a strip of land that would be 34.5 feet wide by 264 feet long, which is an unbuildable parcel only conveyable to her. The survey is complete and the legal description has been provided. The first step is to set the public hearing (March 27th) and the second step is to hold the public hearing (April 10th).

Joel Greer, Mayor
Jessica Kinser, Administrator
Alicia Hunter, City Clerk
24 North Center Street
Marshalltown, IA 50158-4911
Tel - (641) 754-5799
Fax - (641) 754-5717

MARSHALLTOWN
IOWA

City Administrator's Office

To: Mayor Greer and the City Council
From: Jessica Kinser, City Administrator
Date: January 4, 2023
RE: Request to Purchase Property

I received the attached request from Cynthia Lewis, owner of 1021 South 5th Avenue, in December, requesting to purchase a portion of the City-owned parcel adjacent to the property that is a portion of the Anson Park ball field. The history of this property extends back to 2018 when the City was looking to trade the property with the School District. Litigation was filed by Ms. Lewis's parents to stop the sale, but that was ultimately dismissed in late 2019/early 2020. The property has remained as is since that time.

Ms. Lewis is offering to pay $500 for a strip of land that would be 34.5 feet wide by 264 feet long. In reviewing the policy for the sale of surplus property, the process of a direct sale is allowable, and it would make since in this case for a few reasons. First, the amount of land requested would make an unbuildable parcel, which Marshall County would not allow the City to create/dispose of without an affidavit of non-severability which would tie the unbuildable parcel to an existing parcel. The only party for this type of transaction to logically occur with would be Ms. Lewis at 1012 South 5th Avenue.

If the Council would like to proceed forward with this transaction, I would recommend a motion to direct staff to set a public hearing on the disposal of the property requested. I cannot guarantee what date we could set a public hearing or hold a public hearing, as we will need CGA to update a survey of the property in order to provide a legal description that would be used in hearing notices and deeds. As part of a sale, we would require Ms. Lewis to sign an affidavit of non-severability to be recorded at the time of sale, as this would be the only way the real estate transaction could occur.

City Council
Al Hoop, Gabriel Isom, Barry Kell, Mike Ladehoff,
Jeff Schneider, Gary Thompson, Dex Walker

December 8, 2022

RE: Letter of Intent to Purchase

Dear Al Hoop,

My name is Cynthia Lewis, and I am the owner of Marshall County Property 8418-35-476-004 (1021 S. 5th Ave Marshalltown, Iowa 50158).

This is a "homestead" that has been in our family for over 100 years. My Father, William A George has taken care of part of the adjoining Marshall County Property 8418-35-476-011 for more then 60 years.

In order to bring this issue to rest, I am interested in purchasing said adjoining property. I am offering $500 to purchase 225'x34.5' of additional land, Marhsall County Property 8418-35-476-011 that is adjoining to my Marshall County Property 8418-35-476-004, via Quit Claim Deed.

Thank you inadvance for considering this.

Sincerely,

Cynthia Lynn Lewis

Melissa A Nine

NOTARIAL SEAL IOWA
MELISSA A. NINE
Commission Number 709360
My Commission Expires
April 11, 2025

12-8-22

PLAT OF SURVEY

INDEX LEGEND	
LOCATION:	PARCEL "C" IN PART OF LOT 1 OF LOT 1, SUBDIVISION OF THE SE1/4 SE 1/4 OF SECTION 35, TOWNSHIP 84 NORTH, RANGE 18 WEST OF THE 5TH P.M., CITY OF MARSHALLTOWN, MARSHALL COUNTY, IOWA
PROPRIETOR:	CITY OF MARSHALLTOWN
REQUESTED BY:	CITY OF MARSHALLTOWN
PREPARED BY: RETURN TO: TRAVIS R. STEWART	CLAPSADDLE-GARBER ASSOCIATES, INC, 16 EAST MAIN STREET, P.O. BOX 754, MARSHALLTOWN, IOWA 50158 PHONE 641-752-6701 CGA@CGACONSULTANTS.COM

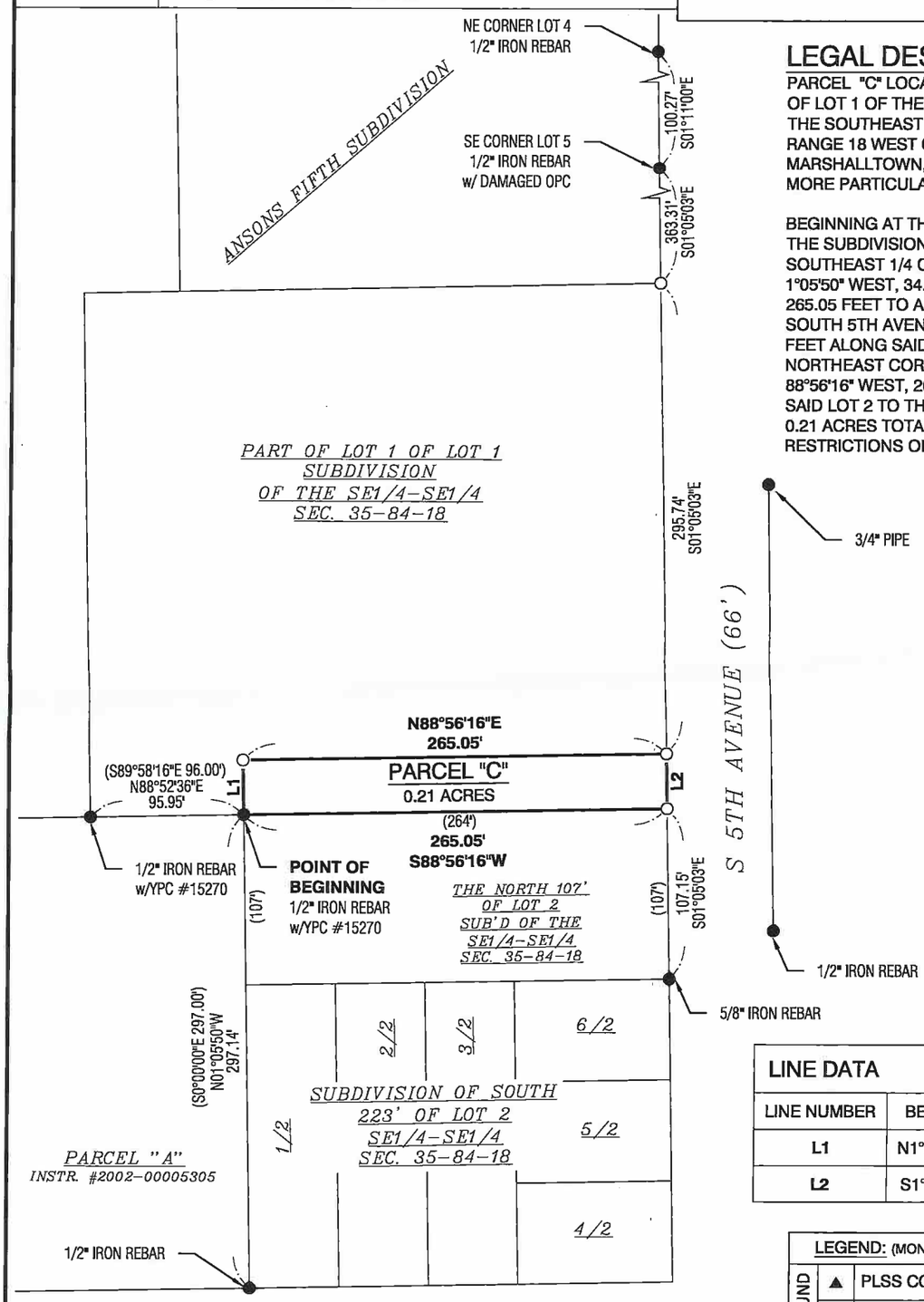

LEGAL DESCRIPTION:

PARCEL "C" LOCATED ENTIRELY WITHIN A PART OF LOT 1 OF LOT 1 OF THE SUBDIVISION OF THE SOUTHEAST 1/4 OF THE SOUTHEAST 1/4, SECTION 35, TOWNSHIP 84 NORTH, RANGE 18 WEST OF THE 5TH P.M., CITY OF MARSHALLTOWN, MARSHALL COUNTY, IOWA, MORE PARTICULARLY DESCRIBED AS FOLLOWS:

BEGINNING AT THE NORTHWEST CORNER OF LOT 2 OF THE SUBDIVISION OF THE SOUTHEAST 1/4 OF THE SOUTHEAST 1/4 OF SAID SECTION 35; THENCE NORTH 1°05'50" WEST, 34.50 FEET; THENCE NORTH 88°56'16" EAST, 265.05 FEET TO A POINT ON THE WEST RIGHT OF LINE OF SOUTH 5TH AVENUE; THENCE SOUTH 1°05'03" EAST, 34.50 FEET ALONG SAID WEST RIGHT OF WAY LINE TO THE NORTHEAST CORNER OF SAID LOT 2; THENCE SOUTH 88°56'16" WEST, 265.05 FEET ALONG THE NORTH LINE OF SAID LOT 2 TO THE POINT OF BEGINNING, CONTAINING 0.21 ACRES TOTAL. SUBJECT TO EASEMENTS AND RESTRICTIONS OF RECORD, IF ANY.

LINE DATA

LINE NUMBER	BEARING	DISTANCE
L1	N1°05'50"W	34.50'
L2	S1°05'03"E	34.50'

LEGEND: (MONUMENT SYMBOLS ARE ORIENTED TO THE NORTH)		
FOUND	▲	PLSS CORNER (as noted)
	●	PARCEL OR LOT CORNER
SET	△	PLSS CORNER - 1/2" DIAMETER x 30" IRON REBAR w/ORANGE PLASTIC ID CAP (#17162)
	○	1/2" DIAMETER x 30" IRON REBAR w/ORANGE PLASTIC ID CAP (#17162)

( ) = RECORDED AS

CITY OF MARSHALLTOWN SURVEY, MARSHALLTOWN, MARSHALL COUNTY, IOWA

N

SCALE 1"=100'

0 100'

TRAVIS R. STEWART
LICENSED
17162
IOWA
PROFESSIONAL LAND SURVEYOR

I hereby certify that this land surveying document was prepared and the related survey work was performed by me or under my direct personal supervision and that I am a duly Licensed Professional Land Surveyor under the laws of the State of Iowa.

3/20/2022
date

Travis R. Stewart, PLS
Iowa License Number 17162
My License Renewal Date is December 31, 2023
Pages or sheets covered by this seal: THIS SHEET

CGA

PN:	77861_2023
DATE OF SURVEY:	1-27-23
DRAWN BY:	TMM
FIELD CREW:	DCM
SHEET NO.	1 OF 1

J:\77861_2023 Plat 1021 S 5th Ave\dwgs\77861_2023 Plat.dwg - Plat LEGL - 03-28-23 - 2:55pm - trs246

Prepared by and return to: City Clerk, City of Marshalltown, 24 North Center Street, Marshalltown, IA 50158
Ph. 641-754-5701

AFFIDAVIT OF NON-SEVERABILITY

STATE OF IOWA, MARSHALL COUNTY, ss:

The undersigned, Cinthia Lynn Lewis, being first duly sworn, do on oath depose and state:

1. I am the owner of record to the following described real estate to wit:

   Lot 2, except the South 233 feet, of the Southeast 1/4 of the Southeast 1/4 of Section 35, Township 84 North, Range 18 West of the 5th P.M., Marshall County, Iowa. (known as 1021 S 5th Ave, Marshalltown, Iowa)

2. We are acquiring title to the following property which adjoins the above described real estate:

   Parcel "C" located entirely within a part of Lot 1 of Lot 1 of the Subdivision of the Southeast 1/4 of the Southeast 1/4, Section 35, Township 84 North, Range 18 West of the 5th P.M., City of Marshalltown, Marshall County, Iowa.

3. In acquiring the second described real estate, we know and understand that the property as set forth in paragraph one will not be severable from the real estate set forth in paragraph two. In other words, we know and understand that we will not be able to sell the property set forth in paragraph one separately from the land set forth in paragraph two without first obtaining approval from the City of Marshalltown. The real estate will become one parcel and will be non-severable.

_____
Cynthia Lynn Lewis

STATE OF IOWA, MARSHALL COUNTY

On this _____day of _____ , 20____, before me, a notary public in and for Marshall County, State of Iowa, personally appeared Cynthia Lynn Lewis, to me known to be the persons named in and who executed the foregoing instrument, and acknowledged that they executed the same as their voluntary act and deed.

_____
Notary Public in and for Marshall County, Iowa

2023-076

RESOLUTION PROVIDING FOR THE CONVEYANCE AND TRANSFER OF TITLE OF CITY OWNED LAND TO ELENO L. AND MARCIA A. HERNANDEZ

WHEREAS, the City of Marshalltown, Iowa, is the owner of real property ("Property") situated in the City of Marshalltown, Marshall County, Iowa, locally known as 107 East Lincoln Street, Marshalltown, Iowa, and legally described as follows:

> THE WEST 45 FEET OF LOT 10, BLOCK 1, WEBSTER'S SECOND ADDITION TO THE TOWN OF NORTH MARSHALL, MARSHALL COUNTY, IOWA; and

WHEREAS, the City acquired title to the Property, which had been abandoned, by court order pursuant to the provisions of Iowa Code §657A.10B; and

WHEREAS, at the time the City acquired title to the Property there was situated a fire-damaged residential dwelling ("Dwelling") and an undamaged detached garage ("Garage"); and

WHEREAS, the City has demolished the Dwelling at public expense, but is unable to demolish the Garage, which straddles a property line, without subjecting the City to potential damages as a result of the neighboring property owners' arguable interests in the Garage; and

WHEREAS, the cost to demolish the Garage, together with prospective damages and/or resulting legal fees and expenses would likely exceed the residual value of the Property; and the continued presence of the Garage on the Property hampers its marketability for sale and redevelopment; and

WHEREAS, the Property is sufficiently deep to convey the south forty (40) feet of the Property, upon which the Garage is situated, to the neighboring property owners without rendering the Property non-conforming; and

WHEREAS, the sale and conveyance of the south forty (40) feet of the Property to the neighboring property owners will enable the City to minimize its expenditure of public funds on the Property, avoid potential liability, and maximize its return on the eventual sale of the Property; and

NOW THEREFORE, BE IT RESOLVED BY THE CITY COUNCIL OF THE CITY OF MARSHALLTOWN IOWA, that conveyance and transfer of title to the south forty (40) feet of the Property to adjacent property owners, Eleno L. and Marcia A. Hernandez, in consideration of the sum of $1.00 and other good and valuable consideration is hereby authorized and approved; and

BE IT FURTHER RESOLVED, the Mayor and City Clerk of the City of Marshalltown, Iowa, are hereby authorized and directed to execute a Quit Claim Deed and to take such further steps as may be necessary to facilitate the above-referenced transfer and conveyance.

Passed this _____ day of April 2023 and signed this _____ day of April 2023.

CITY OF MARSHALLTOWN, IOWA

_____

Joel T.S. Greer, Mayor

ATTEST:

_____

Alicia Hunter, City Clerk

2023-077

RESOLUTION PROVIDING FOR THE CONVEYANCE AND TRANSFER OF TITLE FOR 503 BROMLEY STREET FROM THE CITY OF MARSHALLTOWN, IOWA TO RAYMOND JACKSON

WHEREAS, the Council of the City of Marshalltown, Iowa finds it is in the best interest of the City and proposes to convey and transfer by Quit Claim Deed, property set out and described in Section 1 hereof to Raymond Jackson; and

WHEREAS, the consideration for the transfer of the real estate to Raymond Jackson, as set forth in Section 1, is the full sum of $601 (Six Hundred One and 00/100) Dollars, said sum payable to the City of Marshalltown; and

WHEREAS, the property being transferred by the City of Marshalltown, Iowa to Raymond Jackson is real estate which is not being used to the full advantage of the City, and is not required for any other public purpose, and no rights of private persons will be adversely affected; and

WHEREAS, the City of Marshalltown hereby proposes the transfer of said property, subject to easements being retained and rights of way of utilities, and access to and maintenance of said utilities. Said easements, rights of way and access will be retained until such time as the utility no longer utilizes or needs facilities in this location; and

WHEREAS, a notice of public hearing has been published according to law notifying the public of the proposed conveyance and transfer of title, and said public hearing was held.

NOW, THEREFORE, BE IT RESOLVED BY THE COUNCIL OF THE CITY OF MARSHALLTOWN, IOWA:

Section 1. The City of Marshalltown, Iowa, by this resolution, approve the conveyance and transfer of title by Quit Claim Deed to Raymond Jackson of the property:

> **503 Bromley Street, legally described as:** LOT FIVE IN BLOCK SIX IN THE TOWN OF MARSHALLTOWN, MARSHALL COUNTY, IOWA

The consideration for such conveyance shall be the sum of $601.00 (Six Hundred One and 00/100).

Section 2. The City of Marshalltown hereby approves the transfer of said property, subject to easements being retained and rights of way of utilities, and access to and maintenance of said utilities. Said easements, rights of way and access will be retained until such time as the utility no longer utilizes or needs facilities in this location.

Passed this 10th day of April 2023, and signed this _____ day of April 2023.

CITY OF MARSHALLTOWN, IOWA

_____

Joel T.S. Greer, Mayor

ATTEST:

_____

Alicia Hunter, City Clerk

MARSHALLTOWN
IOWA
City Administrator's Office

Joel Greer, Mayor
Jessica Kinser, Administrator
Alicia Hunter, Clerk
24 North Center Street
Marshalltown, IA 50158-4911
Tel - (641) 754-5799
Fax - (641) 754-5717

REQUEST FOR SEALED BIDS FOR THE PURCHASE OF VACANT LOTS

The City of Marshalltown is selling 2 vacant lots which were acquired through the Dangerous and Dilapidated Building Program. The City is offering a quit claim deed for the properties, which are being sold as is. The highest bid for each lot will be selected as the winning bid.

Sealed bids are due by **12:00PM CST on March 16, 2023**. Bids must include the dollar amount of the bid and the following information (if available):

- Name of bidder
- Address of bidder
- Telephone number of bidder
- Email address of bidder
- Name for deed (will only use if the highest bidder)
- Address for the tax statement to be sent (will only use for the highest bidder)

If bidding on multiple lots, please provide a separate bid for each property. The City will contact you after the bids are due to let you know if you are the highest bidder or not. The bid should be in a sealed envelope marked "Sealed Bid for Vacant Lots" and submitted to the City Clerk by the date and time above at:

City of Marshalltown
Attn: City Clerk
24 North Center Street
Marshalltown, Iowa 50158

Bids received after the due date and time will not be accepted. The City reserves the right to reject all bids and to waive any irregularities.

Following the acceptance of bids, the City of Marshalltown will have resolutions setting public hearings on the sale of the parcels on the March 27th City Council meeting. The public hearings will be held at the April 10th City Council meeting, following consideration of a resolution to approve the sale. Closing on the properties will take place after April 11th, with the purchaser to provide payment in full before the quit claim deed is provided. The information below is a brief description of each of the properties for sale.

City Council
Al Hoop, Gabriel Isom, Barry Kell, Mike Ladehoff,
Jeff Schneider, Gary Thompson, Dex Walker

Please note that an accessory building will not be allowed as the only structure on each of these parcels, unless an adjoining property owner is the purchaser and provides an affidavit of non-separation.

1. 503 Woodbury Street
   PIN: 8418-26-478-002 Zoning: Medium Residential Size: 60 x 180
   Lot will allow for a new residential structure to be built. This lot was acquired on a tax deed from the County Treasurer.

2. 503 Bromley Street
   PIN: 8418-26-481-004 Zoning: Medium Residential Size: 60 x 180
   Lot will allow for a new residential structure to be built. This lot was acquired as an abandoned property, with the demolition completed by the City in 2019.

Please contact Jessica Kinser, jkinser@marshalltown-ia.gov or 641-754-5799, with any questions.

CITY OF MARSHALLTOWN BID TABULATION
SEALED BID REQUEST - PURCHASE OF VACANT LOTS
DUE: 03/16/23, 12 pm

	503 Woodbury St	503 Bromley St
Raymond Jackson	$ 601.00	$ 601.00

2023-0

RESOLUTION PROVIDING FOR THE CONVEYANCE AND TRANSFER OF TITLE FOR 503 WOODBURY STREET FROM THE CITY OF MARSHALLTOWN, IOWA TO RAYMOND JACKSON

WHEREAS, the Council of the City of Marshalltown, Iowa finds it is in the best interest of the City and proposes to convey and transfer by Quit Claim Deed, property set out and described in Section 1 hereof to Raymond Jackson; and

WHEREAS, the consideration for the transfer of the real estate to Raymond Jackson, as set forth in Section 1, is the full sum of $601 (Six Hundred One and 00/100) Dollars, said sum payable to the City of Marshalltown; and

WHEREAS, the property being transferred by the City of Marshalltown, Iowa to Raymond Jackson is real estate which is not being used to the full advantage of the City, and is not required for any other public purpose, and no rights of private persons will be adversely affected; and

WHEREAS, the City of Marshalltown hereby proposes the transfer of said property, subject to easements being retained and rights of way of utilities, and access to and maintenance of said utilities. Said easements, rights of way and access will be retained until such time as the utility no longer utilizes or needs facilities in this location; and

WHEREAS, a notice of public hearing has been published according to law notifying the public of the proposed conveyance and transfer of title, and said public hearing was held.

NOW, THEREFORE, BE IT RESOLVED BY THE COUNCIL OF THE CITY OF MARSHALLTOWN, IOWA:

Section 1. The City of Marshalltown, Iowa, by this resolution, approve the conveyance and transfer of title by Quit Claim Deed to Raymond Jackson of the property:

> **503 Woodbury Street, legally described as:** LOT FIVE IN BLOCK ONE IN THE TOWN OF MARSHALLTOWN, MARSHALL COUNTY, IOWA

The consideration for such conveyance shall be the sum of $601.00 (Six Hundred One and 00/100).

Section 2. The City of Marshalltown hereby approves the transfer of said property, subject to easements being retained and rights of way of utilities, and access to and maintenance of said utilities. Said easements, rights of way and access will be retained until such time as the utility no longer utilizes or needs facilities in this location.

Passed this 10th day of April 2023, and signed this _____ day of April 2023.

CITY OF MARSHALLTOWN, IOWA

_____

Joel T.S. Greer, Mayor

ATTEST:

_____

Alicia Hunter, City Clerk

MARSHALLTOWN
IOWA
City Administrator's Office

Joel Greer, Mayor
Jessica Kinser, Administrator
Alicia Hunter, Clerk
24 North Center Street
Marshalltown, IA 50158-4911
Tel - (641) 754-5799
Fax - (641) 754-5717

REQUEST FOR SEALED BIDS FOR THE PURCHASE OF VACANT LOTS

The City of Marshalltown is selling 2 vacant lots which were acquired through the Dangerous and Dilapidated Building Program. The City is offering a quit claim deed for the properties, which are being sold as is. The highest bid for each lot will be selected as the winning bid.

Sealed bids are due by **12:00PM CST on March 16, 2023**. Bids must include the dollar amount of the bid and the following information (if available):

- Name of bidder
- Address of bidder
- Telephone number of bidder
- Email address of bidder
- Name for deed (will only use if the highest bidder)
- Address for the tax statement to be sent (will only use for the highest bidder)

If bidding on multiple lots, please provide a separate bid for each property. The City will contact you after the bids are due to let you know if you are the highest bidder or not. The bid should be in a sealed envelope marked "Sealed Bid for Vacant Lots" and submitted to the City Clerk by the date and time above at:

City of Marshalltown
Attn: City Clerk
24 North Center Street
Marshalltown, Iowa 50158

Bids received after the due date and time will not be accepted. The City reserves the right to reject all bids and to waive any irregularities.

Following the acceptance of bids, the City of Marshalltown will have resolutions setting public hearings on the sale of the parcels on the March 27th City Council meeting. The public hearings will be held at the April 10th City Council meeting, following consideration of a resolution to approve the sale. Closing on the properties will take place after April 11th, with the purchaser to provide payment in full before the quit claim deed is provided. The information below is a brief description of each of the properties for sale.

City Council
Al Hoop, Gabriel Isom, Barry Kell, Mike Ladehoff,
Jeff Schneider, Gary Thompson, Dex Walker

Please note that an accessory building will not be allowed as the only structure on each of these parcels, unless an adjoining property owner is the purchaser and provides an affidavit of non-separation.

1. 503 Woodbury Street
   PIN: 8418-26-478-002 Zoning: Medium Residential Size: 60 x 180
   Lot will allow for a new residential structure to be built. This lot was acquired on a tax deed from the County Treasurer.

2. 503 Bromley Street
   PIN: 8418-26-481-004 Zoning: Medium Residential Size: 60 x 180
   Lot will allow for a new residential structure to be built. This lot was acquired as an abandoned property, with the demolition completed by the City in 2019.

Please contact Jessica Kinser, jkinser@marshalltown-ia.gov or 641-754-5799, with any questions.

CITY OF MARSHALLTOWN BID TABULATION
SEALED BID REQUEST - PURCHASE OF VACANT LOTS
DUE: 03/16/23, 12 pm

	503 Woodbury St	503 Bromley St
Raymond Jackson	$ 601.00	$ 601.00

MARSHALLTOWN
IOWA

Joel Greer, Mayor
Jessica Kinser, City Administrator
24 North Center Street
Marshalltown, IA 50158
PH 641.754.5701 | FX 641.754.5717

TO: Mayor Greer and the City Council
FROM: Jessica Kinser, City Administrator
DATE: March 22, 2023
RE: Sale of 906 S. 11th Ave.

Strategic Plan:

☒ Strategy 1: Expand and improve development in the community.
☐ Strategy 2: Enhance Marshalltown's public image.
☒ Strategy 3: Continually improve and sustain the City's infrastructure, organization, and services.
☐ Strategy 4: Partner with citizens, for-profit, non-profit, and others to improve quality of life.

Plan Objective:

Recommendation: To approve the resolution as proposed

Budget Impact: $100 sale price

Description/Background:
The City requested the tax certificate for 906 S. 11th Avenue in August 2022 at the request of the owner of 908 S. 11th Avenue. We issued a notice for the sale of the lot using a process where a purchaser is pledging to build something on the lot. DJ Norem is the only bid received and is proposing to purchase the lot for $100 and file an affidavit of non-separation to combine this property with his at 908 in order to build an accessory building. He has worked with Planning & Zoning to determine the maximum size can be 426 square feet. The construction estimate is $25-30,000 depending on material prices.

The process is to set a public hearing at the March 27th meeting, which will be held at the April 10th meeting. With the public hearing will be the consideration of a development agreement which will be worked on with Mr. Norem and Lynch Dallas following the March 27th meeting.

MARSHALLTOWN
IOWA
City Administrator's Office

Joel Greer, Mayor
Jessica Kinser, Administrator
Alicia Hunter, City Clerk
24 North Center Street
Marshalltown, IA 50158-4911
Tel - (641) 754-5799
Fax - (641) 754-5717

Sale of Residential Lot
906 South 11th Avenue

The City of Marshalltown, Iowa, will accept bids on the 22nd day of March 2023, at 10:00 A.M. CST for the following described real property ("Property") located in Marshall County, known as 906 South 11th Avenue and legally described as the following:

> LOT 3 IN BLOCK 1 IN SUTTON'S ADDITION TO THE TOWN OF MARSHALL, MARSHALL COUNTY, IOWA AND THE SOUTH 50 FEET OF THE NORTH 148 FEET 4 INCHES OF THE VACATED ALLEY ADJOINING SAID LOT 3 ON THE EAST.

The property is 50 feet wide by 138 feet deep. It is zoned as Medium Density-Residential. The property was acquired from the Marshall County Treasurer's Office as a tax deed.

Sealed bids are due on or before March 22, 2023, at 10:00 AM CST, in the office of the City Clerk, City Hall, 24 North Center Street, Marshalltown, Iowa. Any bid received after the time and date specified shall not be considered. The failure or omission of any bidder to examine any form, instrument, or document shall in no way relieve such bidder from any obligation with respect to a submitted bid. Each bid must be submitted on a fully completed bid blank, as provided by the City, in a sealed envelope marked with the Property's address. No faxed or emailed bids will be accepted. Bids will be opened immediately following the deadline. Anyone submitting a bid for the Property must agree in writing to meet the conditions set by the City of Marshalltown concerning the uses of the Property.

The Marshalltown City Council will discuss the bids received at March 27th City Council meeting. At that time, the City Council may accept a bid and award the sale of the Property to the bidder whose application is the most advantageous to the citizens of the City, as determined by the City Council, or the City Council may reject any or all bids in its sole discretion. The City Council reserves the right to waive any discrepancies or technicalities associated with any bid.

Sale of Lot & Construction

The Property is being sold "AS IS" and no survey has been performed, so the bidder should carefully inspect the Property prior to making a bid on the Property.
The property is a vacant lot with no utility services.

City Council
Al Hoop, Gabriel Isom, Barry Kell, Mike Ladehoff,
Jeff Schneider, Gary Thompson, Dex Walker

The Property will be conveyed to the successful purchaser by quit claim deed with right of reversion. If an abstract is requested, the Purchaser must furnish this at their own expense. Closing shall take place within 60 days of award of the Property to the chosen bidder. The entire bid price will be due and payable at closing. All bids must be cash transactions and may not be conditioned on financing.

Bids shall be considered firm offers to purchase the Property and will be held open for a period of sixty (60) calendar days from the above-referenced deadline for submission. If a development agreement prepared by the City and presented to the winning bidder is not executed and submitted to the City within the fifty-five (55) days of the City Council awarding the bid, or if the transaction otherwise fails, the bid will be deemed null and void, and the City Council will proceed to award the bid to the next best bidder as determined by the City Council, reject all bids, or issue a new bid for the Property, in the Council's sole discretion.

The Property is being sold with the sole purpose of encouraging new construction in infill areas. A new home or accessory building if an adjacent owner must be built or moved onto the Property and have construction completed within two (2) years of the date of execution of the development agreement. Extensions to this time limitation may only be granted by specific permission of the City Council. Homes or accessory buildings must be of stick-built or manufactured construction, and meet the following requirements:

1) If a driveway is installed exiting onto South 11th Avenue, it must be paved.
2) The public sidewalk must be reinstalled per code, which will be required as part of the building permit for the new construction.
3) An accessory building will not be allowed as the only structure on each of these parcels, unless an adjoining property owner is the purchaser and provides an affidavit of non-separation.
4) Homes constructed must conform to all Marshalltown building and zoning codes.

There is no minimum sales price for the lot.

If a new home is built, the City has a residential tax abatement available on new construction on a 3, 5- or 10-year sliding scale. If the home to be constructed meets the requirements of the Make Marshalltown Home program through Marshalltown Area Chamber of Commerce, the owner can elect to take the $10,000 cash incentive in lieu of the tax abatement. Otherwise, tax abatement is available for additions that increase the value of the property by more than 10%.

Bid Form – 906 South 11th Avenue Woodbury Street

Describe the intended use for the property, bidder's experience in residential property development and construction, and any other relevant information. Please attach a separate sheet of paper if needed:

_____

_____

_____

_____

Please provide the following information about the residential property to be built:

Square Footage: _____ Construction Cost: _____

Number of Stories: _____ Number of Bedrooms: _____

Type of Home/Number of Units: _____ (Single Family, Duplex, etc.)

My bid for 906 South 11th Avenue: $_____

Please list any local (Marshall County) subcontractors or suppliers:

_____

_____

_____

_____ I acknowledge and agree to all of the requirements detailed in the bid notice and specifically acknowledge and agree to the requirement to complete construction of a home on the Property suitable for occupancy within 24 months.

_____ I acknowledge and agree to fully comply with the requirements of the Marshalltown Code of Ordinances as it may relate to construction activities upon the Property.

_____ I acknowledge and agree the City of Marshalltown has the right to reject any or all bids.

Bidder Information:

Name:_____

Address:_____

Contact Phone:_____

Signature: _____ Date: _____

Please seal your bid in an envelope and submit to the City Clerk, 24 North Center Street, Marshalltown, IA 50158 no later than 10:00 A.M. CST on March 22, 2023.

City Council
Al Hoop, Gabriel Isom, Barry Kell, Mike Ladehoff,
Jeff Schneider, Gary Thompson, Dex Walker

2023-2024 Strategic Plan Update

MARSHALLTOWN
MORE THAN EVER

Strategy 1- Expand & improve development in the community

Accomplished:

- Approved development agreement for downtown pharmacy project
- 2 new construction housing incentives issued

In Process:

- Hired Foth for site certification work
- Bidding of Downtown Revitalization Grant work
- Destination Iowa funding for Linn Creek District projects awarded
- East Main Street design process underway
- State Street construction work underway
- Discussed sales process for 328 S. 3rd Avenue and 20 E. Main
- Exterior wall work/demolition at 3 downtown locations
- Awarded CDBG-DR housing grant (City); 3 other grants awarded in community
- Water treatment/capacity expansion

Strategy 2- Enhance Marshalltown's public image

Accomplished:

- Successful 657a cases for 107 E. Lincoln St., 910 S. 2nd Ave
- Performed temporary repair to Center Street viaduct
- Website redesign launched
- Stormwater Coordinator outreach
- Created 2 project-specific communication lists

In Process:

- Rolling out a Communications Plan internally
- 13 open HUD lead abatement projects
- 4 tax certificates received from the County Treasurer
- Demolition bid for 5 residential properties
- Stump and ash tree removal from parks and ROW
- CDBG-DR tree replanting application

Strategy 3- Improve & sustain the City's infrastructure, organization & services

Accomplished:

- Approved a $13M SRF loan for the headworks at the wastewater treatment plan & CIPP project
- Created the Stormwater Advisory Committee
- Held employee in-service day on President's day
- Held a joint meeting with the County
- Submitted 3 bridges to DOT highway bridge program for funding
- Adjusted Compost hours of operation

In Process:

- Developed and set a public hearing on the FY24 budget and FY23-27 CIP
- Identification and disposal of vacated alleys

Strategy 4- Partner with citizens, for-profit, non-profit & others to improve quality of life

Accomplished:

- Arts & Culture Master Plan accepted by the City Council

In Process:

- Date set for a work session on homelessness (4/20/23)
- MOBI delivered and getting prepared to serve the community
- Operational agreement with MCBD in-process
- Planning annual partnership with Cleaniac for both parks and stormwater
- Planning for Iowa Great Place annual conference